MITSUBISHI ELECTRIC

GRAPHIC OPERATION TERMINAL

GOT2000

GOT2000 Series
Connection Manual (Mitsubishi Electric Products)
For GT Works3 Version1

-GT27 model
-GT25 model
-GT25 open frame model
-GT25 wide model
-GT25 rugged model
-GT23 model
-GT21 model
-GT21 wide model

SAFETY PRECAUTIONS

(Always read these precautions before using this equipment.)

Before using this product, please read this manual and the relevant manuals introduced in this manual carefully and pay full attention to safety to handle the product correctly.

The precautions given in this manual are concerned with this product.

In this manual, the safety precautions are ranked as "WARNING" and "CAUTION".

⚠ **WARNING**	**Indicates that incorrect handling may cause hazardous conditions, resulting in death or severe injury.**
⚠ **CAUTION**	**Indicates that incorrect handling may cause hazardous conditions, resulting in minor or moderate injury or property damage.**

Note that failure to observe ⚠ CAUTION may lead to a serious accident depending on the circumstances.

Make sure to observe both warnings and cautions to ensure personal safety.

Please save this manual to make it accessible when required and always forward it to the end user.

[DESIGN PRECAUTIONS]

⚠ WARNING

- Some failures of the GOT, communication unit or cable may keep the outputs on or off.
  Some failures of a touch panel may cause malfunction of the input objects such as a touch switch.
  An external monitoring circuit should be provided to check for output signals which may lead to a serious accident. Not doing so can cause an accident due to false output or malfunction.
- Do not use the GOT as the warning device that may cause a serious accident.
  An independent and redundant hardware or mechanical interlock is required to configure the device that displays and outputs serious warning.
  Failure to observe this instruction may result in an accident due to incorrect output or malfunction.
- When the GOT backlight has a failure, the GOT status will be as follows. Failure to observe this instruction may result in an accident due to incorrect output or malfunction.
  [GT27, GT25, GT23, GS25]
  The POWER LED blinks (orange/blue), the display section dims, and inputs by a touch switch are disabled.
  [GT2105-Q]
  The POWER LED blinks (orange/blue), and the display section dims. However, inputs by a touch switch are still available.
  [GT2107-W, GT2104-R, GT2104-P, GT2103-P, GS21]
  The display section dims. However, inputs by a touch switch are still available.
  Even if the display section dims, inputs by a touch switch may still be available. This may cause an unintended operation of the touch switch.
  For example, if an operator assumes that the display section has dimmed because of the screen save function and touches the display section to cancel the screen save, a touch switch may be activated.
  The GOT backlight failure can be checked with a system signal of the GOT. (This system signal is not available on GT2107-W, GT2104-R, GT2104-P, GT2103-P, and GS21.)

[DESIGN PRECAUTIONS]

⚠ WARNING

- The display section of the GOT is an analog-resistive type touch panel.
  When multiple points of the display section are touched simultaneously, an accident may occur due to incorrect output or malfunction.
  [GT27]
  Do not touch three points or more simultaneously on the display section. Doing so may cause an accident due to an incorrect output or malfunction.
  [GT25, GT23, GT21, GS25, GS21]
  Do not touch two points or more simultaneously on the display section. Doing so may cause a touch switch near the touched points to operate unexpectedly, or may cause an accident due to an incorrect output or malfunction.
- When programs or parameters of the controller (such as a PLC) that is monitored by the GOT are changed, be sure to reset the GOT, or turn on the unit again after shutting off the power as soon as possible.
  Not doing so can cause an accident due to false output or malfunction.
- If a communication fault (including cable disconnection) occurs during monitoring on the GOT, communication between the GOT and PLC CPU is suspended and the GOT becomes inoperative.
  (1) For bus connection (GT27 and GT25 only): The GOT becomes inoperative. Power on the PLC CPU again to reestablish communication.
  (2) For other than bus connection: The GOT becomes inoperative.
  A system where the GOT is used should be configured to perform any significant operation to the system by using the switches of a device other than the GOT on the assumption that a GOT communication fault will occur.
  Not doing so can cause an accident due to false output or malfunction.
- To maintain the security (confidentiality, integrity, and availability) of the GOT and the system against unauthorized access, DoS[*1] attacks, computer viruses, and other cyberattacks from unreliable networks and devices via network, take appropriate measures such as firewalls, virtual private networks (VPNs), and antivirus solutions.
  Mitsubishi Electric shall have no responsibility or liability for any problems involving GOT trouble and system trouble by unauthorized access, DoS attacks, computer viruses, and other cyberattacks.
  *1 DoS: A denial-of-service (DoS) attack disrupts services by overloading systems or exploiting vulnerabilities, resulting in a denial-of-service (DoS) state.

[DESIGN PRECAUTIONS]

⚠ CAUTION

- Do not bundle the control and communication cables with main-circuit, power or other wiring.
  Run the above cables separately from such wiring and keep them a minimum of 100mm apart.
  Not doing so noise can cause a malfunction.
- Do not press the GOT display section with a pointed material as a pen or driver.
  Doing so can result in a damage or failure of the display section.
- When the GOT connects to an Ethernet network, the IP address setting is restricted according to the system configuration.
  [GT27, GT25, GT23, GS25]
  When a GOT2000 series model and a GOT1000 series model are on an Ethernet network, do not set the IP address 192.168.0.18 for the GOTs and the controllers on this network.
  Doing so can cause IP address duplication at the GOT startup, adversely affecting the communication of the device with the IP address 192.168.0.18.
  The operation at the IP address duplication depends on the devices and the system.
  [GT21, GS21]
  Setting the IP address (192.168.3.18) in the following system configurations can cause IP address duplication at GOT startup, adversely affecting communications of the device whose IP address is 192.168.3.18.
  The operation at IP address duplication depends on the devices and the system.
  When multiple GOTs connect to the Ethernet network:
  Do not set the IP address (192.168.3.18) for the GOTs and the controllers in the network.
  When one GOT connects to the Ethernet network:
  Do not set the IP address (192.168.3.18) for the controllers other than the GOT in the network.
- When using the Ethernet interfaces, set an IP address for each interface to access a different network.
- Turn on the controllers and the network devices to be ready for communication before they communicate with the GOT.
  Failure to do so can cause a communication error on the GOT.
- When the GOT is subject to shock or vibration, or some colors appear on the screen of the GOT, the screen of the GOT might flicker.

[MOUNTING PRECAUTIONS]

⚠ WARNING

- Be sure to shut off all phases of the external power supply used by the system before mounting or removing the GOT main unit to/from the panel.
  Not doing so can cause the unit to fail or malfunction.
- Be sure to shut off all phases of the external power supply used by the system before mounting or removing the option unit onto/from the GOT. (GT27, GT25 Only)

[MOUNTING PRECAUTIONS]

⚠ CAUTION

- Use the GOT in the environment that satisfies the general specifications described in this manual.
  Not doing so can cause an electric shock, fire, malfunction or product damage or deterioration.
- When mounting the GOT to the control panel, tighten the mounting screws in the specified torque range with Phillips cross-head screwdriver No. 2.
  Undertightening can cause the GOT to drop, short circuit or malfunction.
  Overtightening can cause a drop, short circuit or malfunction due to the damage of the screws or the GOT.
  The specified torque range is as follows.
  [GT27, GT25-W, GT2512-S, GT2510-V, GT2508-V, GT23, GT2107-W, GS25]
  Specified torque range (0.36 N•m to 0.48 N•m)
  [GT2505-V, GT2105-Q]
  Specified torque range (0.30 N•m to 0.50 N•m)
  [GT2104-R, GT2104-P, GT2103-P]
  Specified torque range (0.20 N•m to 0.25 N•m)
- When mounting a unit on the GOT, tighten the mounting screws in the specified torque range.
  Undertightening can cause the GOT to drop, short circuit or malfunction.
  Overtightening can cause a drop, failure or malfunction due to the damage of the screws or unit.
  The specified torque range is as follows.
  [GT27, GT25 (except GT25-W)]
  When loading the communication unit or option unit other than wireless LAN unit to the GOT, fit it to the connection interface of the GOT and tighten the mounting screws in the specified torque range (0.36 N•m to 0.48 N•m) with a Phillips-head screwdriver No. 2.
  When loading the wireless LAN unit to the GOT, fit it to the side interface of GOT and tighten the mounting screws in the specified torque range (0.10 N•m to 0.14 N•m) with a Phillips-head screwdriver No. 1.
  When the GOT is installed vertically, its side interface is positioned on the bottom.
  To prevent the falling of the wireless LAN communication unit from the side interface, install or remove the unit while holding it with hands.
  [GT25-W, GS25]
  When mounting the wireless LAN communication unit on the GOT, fit it to the wireless LAN communication unit interface and tighten the mounting screws in the specified torque range (0.10 N•m to 0.14 N•m) with a Phillips-head screwdriver No.1.
  [GT2103-P]
  When mounting the SD card unit on the GOT, fit it to the side of the GOT and tighten the tapping screws in the specified torque range (0.3 N•m to 0.6 N•m) with a Phillips-head screwdriver No. 2.
- When closing the USB environmental protection cover, note the following points to ensure the IP rating.
  [GT27, GT25 (except GT25-W and GT2505-V)]
  Push the [PUSH] mark on the latch firmly to fix the cover to the GOT.
  [GT2512-WX, GT2510-WX, GT2507-W, GT2505-V, GT2107-W, GS25]
  Push the USB mark on the latch firmly to fix the cover to the GOT.
  [GT2105-Q]
  Tighten the lower fixing screws of the cover in the specified torque range (0.36 N•m to 0.48 N•m) to fix the cover to the GOT.

[MOUNTING PRECAUTIONS]

⚠ CAUTION

- Remove the protective film of the GOT.
  When the user continues using the GOT with the protective film, the film may not be removed.
  In addition, for the models equipped with the human sensor function, using the GOT with the protective film may cause the human sensor not to function properly.
- For GT2512F-S, GT2510F-V, and GT2508F-V, attach an environmental protection sheet dedicated to the open frame model (sold separately) to the display section.
  Or, attach a user-prepared environmental protection sheet.
  Not doing so may damage or soil the GOT or cause foreign matter to enter the GOT, resulting in a failure or malfunction.
- When installing the supplied fittings on GT2512F-S, GT2510F-V, or GT2508F-V, tighten screws in the specified torque range (0.8 N•m to 1.0 N•m).
  Meld studs on the control panel to fasten the fittings.
  The studs must have strength adequate to withstand a tightening torque of 0.9 N•m or more.
  Make sure that no foreign matter such as welding waste is at and around the bases of the studs.
  Tighten nuts on the studs in the specified torque range (0.8 N•m to 0.9 N•m) with a wrench for M4 nuts.
  Undertightening a screw or nut may cause the GOT to drop, short-circuit, or malfunction.
  Overtightening a screw or nut may damage it or the GOT, causing the GOT to drop, short-circuit, or malfunction.
- Do not operate or store the GOT in the environment exposed to direct sunlight, rain, high temperature, dust, humidity, or vibrations.
- Although GT2507T-W is ruggedized for environments such as UV rays, temperatures and vibrations, its operation is not guaranteed in all conditions and environments.
  Make sure to use or store the GOT in an appropriate environment.
- When using the GOT in the environment of oil or chemicals, use the protective cover for oil.
  Failure to do so may cause failure or malfunction due to the oil or chemical entering into the GOT.
- Do not operate the GOT with its display section frozen.
  The water droplets on the display section may freeze at a low temperature.
  Touch switches and other input objects may malfunction if the display section is frozen.

[WIRING PRECAUTIONS]

⚠ WARNING

- Be sure to shut off all phases of the external power supply used by the system before wiring.
  Failure to do so may result in an electric shock, product damage or malfunctions.

[WIRING PRECAUTIONS]

⚠ CAUTION

- When grounding the FG terminal and LG terminal of the GOT power supply section, note the following points.
  Not doing so may cause an electric shock or malfunction.
  [GT27, GT25, GT23, GT2107-W, GT2105-Q, GS25, GS21]
  Make sure to ground the FG terminal and LG terminal of the GOT power supply section solely for the GOT (ground resistance: 100 Ω or less, cross-sectional area of the ground cable: 2.0 mm^2 or more).
  (GT2705-V, GT25-W, GT2505-V, GT2107-W, GT2105-Q, GS25, and GS21 do not have the LG terminal.)
  [GT2104-R, GT2104-P, GT2103-P]
  Make sure to ground the FG terminal of the GOT power supply section with a ground resistance of 100 Ω or less. (For GT2104-PMBLS and GT2103-PMBLS, grounding is unnecessary.)
- When tightening the terminal screws, use the following screwdrivers.
  [GT27, GT25, GT23, GT2107-W, GT2105-Q, GS25, GS21]
  Use a Phillips-head screwdriver No. 2.
  [GT2104-R, GT2104-P, GT2103-P]
  For the usable screwdrivers, refer to the following.
  ☞ GOT2000 Series User's Manual (Hardware)
- Tighten the terminal screws of the GOT power supply section in the following specified torque range.
  [GT27, GT25, GT23, GS25]
  Specified torque range (0.5 N•m to 0.8 N•m)
- For a terminal processing of a wire to the GOT power supply section, use the following terminal.
  [GT27, GT25, GT23, GT2107-W, GT2105-Q, GS25, GS21]
  Use applicable solderless terminals for terminal processing of a wire and tighten them with the specified torque.
  Not doing so can cause a fire, failure or malfunction.
  [GT2104-R, GT2104-P, GT2103-P]
  Connect a stranded wire or a solid wire directly, or use a rod terminal with an insulation sleeve.
- Correctly wire the GOT power supply section after confirming the rated voltage and terminal arrangement of the product.
  Not doing so can cause a fire or failure.
- Tighten the terminal screws of the GOT power supply section in the specified torque range.
  Undertightening can cause a short circuit or malfunction.
  Overtightening can cause a short circuit or malfunction due to the damage of the screws or unit.
  The specified torque range is as follows.
  [GT27, GT25, GT23, GT2107-W, GT2105-Q, GS25]
  Specified torque range (0.5 N•m to 0.8 N•m)
  [GT2104-R, GT2104-P, GT2103-P]
  Specified torque range (0.22 N•m to 0.25 N•m)
  [GS21]
  Specified torque range (0.5 N•m to 0.6 N•m)
- Exercise care to avoid foreign matter such as chips and wire offcuts entering the GOT.
  Not doing so can cause a fire, failure or malfunction.

[WIRING PRECAUTIONS]

⚠ CAUTION

- Some models have an ingress prevention label on their top to prevent foreign matter, such as wire offcuts, from entering the GOT during wiring.
  Do not peel this label during wiring.Before starting system operation, be sure to peel this label because of heat dissipation.
- Plug the communication cable into the GOT interface or the connector of the connected unit, and tighten the mounting screws and the terminal screws in the specified torque range.
  Undertightening may cause a short circuit or malfunction.
  Overtightening can cause a short circuit or malfunction due to the damage of the screws or unit.
- Plug the QnA/ACPU/Motion controller (A series) bus connection cable by inserting it into the connector of the connected unit until it "clicks".
  After plugging, check that it has been inserted snugly.
  Not doing so can cause a malfunction due to a contact fault.

[TEST OPERATION PRECAUTIONS]

⚠ WARNING

- Before testing the operation of a user-created screen (such as turning on or off a bit device, changing the current value of a word device, changing the set value or current value of a timer or counter, and changing the current value of a buffer memory), thoroughly read the manual to fully understand the operating procedure.
  During the test operation, never change the data of the devices which are used to perform significant operation for the system.
  Doing so may cause an accident due to an incorrect output or malfunction.

[STARTUP/MAINTENANCE PRECAUTIONS]

⚠ WARNING

- When power is on, do not touch the terminals.
  Doing so can cause an electric shock or malfunction.
- Correctly connect the battery connector.
  Do not charge, disassemble, heat, short-circuit, solder, or throw the battery into the fire.
  Doing so will cause the battery to produce heat, explode, or ignite, resulting in injury and fire.
- Before starting cleaning or terminal screw retightening, always switch off the power externally in all phases.
  Not switching the power off in all phases can cause a unit failure or malfunction.
  Undertightening can cause a short circuit or malfunction.
  Overtightening can cause a short circuit or malfunction due to the damage of the screws or unit.

[STARTUP/MAINTENANCE PRECAUTIONS]

⚠ CAUTION

- Do not disassemble or modify the unit.
  Doing so can cause a failure, malfunction, injury or fire.
- Do not touch the conductive and electronic parts of the unit directly.
  Doing so can cause a unit malfunction or failure.
- The cables connected to the unit must be run in ducts or clamped.
  Not doing so can cause the unit or cable to be damaged due to the dangling, motion or accidental pulling of the cables or can cause a malfunction due to a cable connection fault.
- When unplugging the cable connected to the unit, do not hold and pull from the cable portion.
  Doing so can cause the unit or cable to be damaged or can cause a malfunction due to a cable connection fault.
- Do not drop the module or subject it to strong shock. A module damage may result.
- Do not drop or give an impact to the battery mounted to the unit.
  Doing so may damage the battery, causing the battery fluid to leak inside the battery.
  If the battery is dropped or given an impact, dispose of it without using.
- Before touching the unit, always touch grounded metals, etc. to discharge static electricity from human body, etc.
  Not doing so can cause the unit to fail or malfunction.
- Use the battery manufactured by Mitsubishi Electric Corporation.
  Use of other batteries may cause a risk of fire or explosion.
- Dispose of used battery promptly.
  Keep away from children.Do not disassemble and do not dispose of in fire.
- Be sure to shut off all phases of the external power supply before replacing the battery or using the dip switch of the terminating resistor.
  Not doing so can cause the unit to fail or malfunction by static electricity.
- Before cleaning the GOT, be sure to turn off the power.
  Before cleaning, check the following items.
  • Ensure that there are no problems with the installation condition of the GOT to the control panel.
  • Ensure that there are no damages on the environmental protection sheet (not replaceable).
  If the environmental protection sheet peels or the cleaning solution enters between the sheet and the display section during cleaning, stop the cleaning immediately.
  In such a case, do not use the GOT.

[TOUCH PANEL PRECAUTIONS]

⚠ CAUTION

- For the analog-resistive film type touch panels, normally the adjustment is not required.
  However, the difference between a touched position and the object position may occur as the period of use elapses.
  When any difference between a touched position and the object position occurs, execute the touch panel calibration.
- When any difference between a touched position and the object position occurs, other object may be activated.
  This may cause an unexpected operation due to incorrect output or malfunction.

[PRECAUTIONS FOR USING A DATA STORAGE]

⚠ WARNING

- Do not remove the SD card from drive A while the SD card is being accessed by the GOT, or the GOT may stop processing for about 20 seconds.
  During this stop, you cannot operate the GOT, and the functions running in the background, including the screen refresh, alarm, logging, and script, also stop.
  This stop may affect the system operation, causing an accident.
  Before removing the SD card, check the following items.
  [GT27, GT25 (except GT2505-V and GT25HS-V), GT23, GS25]
  Before removing the SD card, check that the SD card access LED is off.
  [GT2505-V, GT25HS-V]
  Make sure to turn off the SD card access switch before removing the SD card.Not doing so may damage the SD card and files.
  [GT21, GS21]
  Disable the SD card access in the GOT utility, and then check that the SD card access LED is off before removing the SD card.
- Do not remove the data storage from the file server (drive N) that is being accessed by the GOT, or the system operation may be affected.
  Before removing the data storage, check the relevant system signal to make sure that the data storage is not being accessed.

[PRECAUTIONS FOR USING A DATA STORAGE]

⚠ CAUTION

- Do not remove the data storage from the GOT while the data storage is being accessed by the GOT, or the data storage and files may be damaged.
  Before removing the data storage, check the SD card access LED, relevant system signal, or others to make sure that the data storage is not being accessed.
- Turning off the GOT while it accesses the SD card results in damage to the SD card and files.
- When using the GOT with an SD card inserted, check the following items.
  [GT27, GT25 (except GT2505-V and GT25HS-V), GT23, GS25]
  After inserting an SD card into the GOT, make sure to close the SD card cover.
  Otherwise, data cannot be read or written.
  [GT2505-V, GT25HS-V]
  After inserting an SD card into the GOT, make sure to turn on the SD card access switch.
  Otherwise, data cannot be read or written.
  [GT21, GS21]
  After inserting an SD card into the SD card unit, make sure to enable the SD card access in the GOT utility.
  Otherwise, data cannot be read or written.

[PRECAUTIONS FOR USING A DATA STORAGE]

⚠ CAUTION

- When removing the SD card from the GOT, make sure to support the SD card by hand as it may pop out.
  Not doing so may cause the SD card to drop from the GOT, resulting in a failure or break.
- When inserting a USB device into a USB interface of the GOT, make sure to insert the device into the interface firmly.
  Not doing so may cause a malfunction due to poor contact. (GT27, GT25, GT2107-W, GS25)
- Before removing the data storage from the GOT, follow the procedure for removal on the utility screen of the GOT. After the successful completion dialog is displayed, remove the data storage by hand carefully.
  Not doing so may cause the data storage to drop from the GOT, resulting in a failure or break.

[PRECAUTIONS FOR USE]

⚠ CAUTION

- Do not touch the edges of the touch panel (display section) repeatedly.
  Doing so may result in a failure.
- Do not turn off the GOT while data is being written to the storage memory (ROM) or SD card.
  Doing so may corrupt the data, rendering the GOT inoperative.
- The GOT rugged model uses the environmental protection sheet (not replaceable) with UV protection function on the front surface.
  Therefore, it is possible to suppress deterioration of the touch panel or the liquid crystal display panel that may be caused by ultraviolet rays.
  Note that if the rugged model is exposed to ultraviolet rays for an extended period of time, the front surface may turn yellow.
  If the rugged model is likely to be exposed to ultraviolet rays for an extended period of time, it is recommended to use a UV protective sheet (option).

[PRECAUTIONS FOR REMOTE CONTROL]

⚠ WARNING

- Remote control is available through a network by using GOT functions, including theSoftGOT-GOT link function, the remote personal computer operation function, the VNC server function, and the GOT Mobile function.
  If you remotely operate control equipment using such functions, the field operator may not notice the remote operation, leading to an accident.
  In addition, a communication delay or interruption may occur depending on the network environment, and remote control of control equipment cannot be performed normally in some cases.
  Before using the above functions to perform remote control, fully grasp the circumstances of the field site and ensure safety.
- When operating the server (GOT) of the GOT Mobile function to disconnect a client, notify the operator of the client about the disconnection beforehand.
  Not doing so may cause an accident.

[PRECAUTIONS FOR EXCLUSIVE AUTHORIZATION CONTROL]

⚠ WARNING

- Before using the GOT network interaction function to prevent simultaneous operations from multiple pieces of equipment, make sure you understand the function.
  You can enable or disable the exclusive authorization control of the GOT network interaction function for each screen. (For all screens, the exclusive authorization control is disabled by default.)
  Properly determine the screens for which the exclusive authorization control is required, and set the control by screen.
  A screen for which the exclusive authorization control is disabled is operable simultaneously from multiple pieces of equipment. Make sure to determine the operation period for each operator, fully grasp the circumstances of the field site, and ensure safety to perform operations.

[DISPOSAL PRECAUTIONS]

⚠ CAUTION

- When disposing of this product, treat it as industrial waste.
  When disposing of batteries, separate them from other wastes according to the local regulations.
  (Refer to the GOT2000 Series User's Manual (Hardware) for details of the battery directive in the EU member states.)

[TRANSPORTATION PRECAUTIONS]

⚠ CAUTION

- When transporting lithium batteries, make sure to treat them based on the transport regulations.
  (Refer to the GOT2000 Series User's Manual (Hardware) for details of the regulated models.)
- Make sure to transport the GOT main unit and/or relevant unit(s) in the manner they will not be exposed to the impact exceeding the impact resistance described in the general specifications of this manual, as they are precision devices.
  Failure to do so may cause the unit to fail.
  Check if the unit operates correctly after transportation.
- When fumigants that contain halogen materials such as fluorine, chlorine, bromine, and iodine are used for disinfecting and protecting wooden packaging from insects, they cause malfunction when entering our products.
  Please take necessary precautions to ensure that remaining materials from fumigant do not enter our products, or treat packaging with methods other than fumigation (heat method).
  Additionally, disinfect and protect wood from insects before packing products.

CONTENTS

SAFETY PRECAUTIONS 1
INTRODUCTION 24
Manuals for GT Works3 24
Abbreviations, Generic Terms, and Model Icons 26

PART 1 PREPARATORY PROCEDURES FOR MONITORING

CHAPTER 1 PREPARATORY PROCEDURES FOR MONITORING 34

1.1 Setting the Communication Interface 35
Setting connected equipment (Channel setting) 37
GOT Ethernet Setting 50
I/F communication setting 54
Precautions 56
1.2 Writing the Package Data onto the GOT 57
Writing the Package Data onto the GOT 57
Checking the package data writing on GOT 58
1.3 Option Devices for the Respective Connection 59
Communication module 59
Option unit 61
Conversion cables 61
Serial multi-drop connection unit 61
Field network adapter unit 61
RS-232/485 signal conversion adapter 61
Precautions when installing units on top of one another 62
1.4 Connection Cables for the Respective Connection 64
GOT connector specifications 64
Coaxial cable connector connection method 66
Terminating resistors of GOT 68
Setting the RS-232/485 signal conversion adaptor 74
1.5 Verifying GOT Recognizes Connected Equipment 75
1.6 Checking for Normal Monitoring 77
Check on the GOT 77
Confirming the communication state on the GOT side (For Ethernet connection) 80
Confirming the communication state to each station (Station monitoring function) 82
Check on GX Developer 87
Check on GX Works2 90
Check on the PLC 90

PART 2 MITSUBISHI ELECTRIC PLC CONNECTIONS

CHAPTER 2 ACCESS RANGE FOR MONITORING 92

2.1 Access Range for Monitoring Stations on Network Systems 92
2.2 Access Range for Monitoring when Using Ethernet Connection 105
2.3 CC-Link System Access Range for Monitoring 107
2.4 Access Range for Monitoring Stations on the Data Link System 109

2.5 Access Range for Monitoring when Connecting FXCPU . . . 110
2.6 Connection to Remote I/O Station . . . 111
2.7 Connection to the Head Module. . . . 114

CHAPTER 3 HOW TO MONITOR REDUNTANT SYSTEM 117

3.1 MELSEC iQ-R Series . . . 117
Connection to built-in Ethernet port CPU . . . 119
Connection to Ethernet module . . . 125
Connection to CC-Link IE Controller Network . . . 132
Connection to CC-Link IE Field Network . . . 137
Connection to Remote I/O Station in CC-Link IE Field Network . . . 142
Connection to CC-Link (intelligent device station). . . . 165
When connecting via the serial communication unit . . . 168
When connecting via the extension base unit for the redundant system . . . 170
Precautions . . . 173
3.2 MELSEC Q Series . . . 175
Connection to remote I/O station in MELSECNET/H network system . . . 179
Direct CPU connection (serial) . . . 182
CC-Link connection (Intelligent device station) . . . 188
CC-Link connection (Via G4). . . . 190
MELSECNET/H and MELSECNET/10 connections (Network systems). . . . 192
CC-Link IE controller network connection (Network system) . . . 193
Ethernet connection. . . . 194
Connection to the redundant type extension base unit . . . 196
Switch the Monitor Target to the Control System Using the Script Function . . . 200
Precautions . . . 212
3.3 MELSEC Redundant Setting. . . . 215

CHAPTER 4 ETHERNET CONNECTION 217

4.1 Connectable Model List . . . 217
PLC/Motion CPU . . . 217
Ethernet module . . . 225
4.2 System Configuration . . . 227
Connection to Ethernet module . . . 227
Connection to Built-in Ethernet port CPU or C Controller module. . . . 234
Connection to Display I/F . . . 237
Connection to NZ2GF-ETB . . . 238
Connection to PERIPHERAL I/F . . . 239
Connection to CC-Link IE TSN-equipped module . . . 240
Connection to Motion module . . . 242
Connection through a servo amplifier . . . 246
4.3 GOT Side Settings . . . 248
Setting communication interface (Controller Setting) . . . 248
Communication detail settings. . . . 249
GOT Ethernet Setting . . . 254
Connected Ethernet controller setting . . . 255
Routing parameter setting . . . 260
4.4 PLC Side Setting . . . 261
Connection to MELSEC iQ-R series Built-in Ethernet port CPU . . . 263
Connection to Ethernet module (MELSEC iQ-R Series) . . . 275

Connection to C Controller module (MELSEC iQ-R Series) 284
Connection to MELSECWinCPU (MELSEC iQ-R Series) 288
Connection to MELSEC iQ-F Series built-in Ethernet port CPU 292
Connection to Ethernet module (MELSEC iQ-F Series) 296
Connection to MELSEC-Q/L series Built-in Ethernet port CPU 302
Connection to Ethernet module (Q/L Series) 316
Connection to C Controller module (Q Series) 322
Connection to Ethernet module (QnA Series) 327
Connection to Ethernet module (A Series) 333
Connection to Ethernet module (FX Series) 339
Connection to Built-in Ethernet port FXCPU (FX3GE) 346
Connection to Display I/F (CNC C70) 349
Connection to NZ2GF-ETB 352
Connection to PERIPHERAL I/F 356
Connection to CC-Link IE TSN-equipped module 361
Connection to built-in Ethernet port of Motion module 365
Connection to Motion module through Built-in Ethernet port of PLC 367
4.5 Precautions 368

CHAPTER 5 DIRECT CPU CONNECTION (SERIAL) 375

5.1 Connectable Model List 375
5.2 System Configuration 381
Connection to QCPU 381
Connection to LCPU 383
Connection to QnACPU 387
Connection to ACPU 388
Connection to MELSEC iQ-F Series 389
Connection to FXCPU 394
Connection to WSCPU 417
Connection to the Motion CPU (Q170MCPU, Q170MSCPU(-S1)) 418
5.3 Connection Diagram 420
RS-232 cable 420
RS-422 cable 422
5.4 GOT Side Settings 426
Setting communication interface (Controller Setting) 426
Communication detail settings 427
5.5 PLC Side Setting 434
L6ADP-R4 adapter settings 434
GX Works2 settings 435
5.6 Precautions 436

CHAPTER 6 SERIAL COMMUNICATION CONNECTION 439

6.1 Connectable Model List 439
PLC/Motion CPU 439
Serial communication module/Computer link module 445
6.2 System Configuration 446
Connection to MELSEC iQ-R series 446
Connection to QCPU (Q mode) 448
Connection to LCPU 450
Connection to QCPU (A mode) 452

Connection to QnACPU (QnACPU type) . . . 453
Connection to QnACPU (QnASCPU type) . . . 456
Connection to ACPU (AnCPU type) . . . 459
Connection to ACPU (AnSCPU type, A0J2HCPU, A2CCPUC) . . . 461
6.3 Connection Diagram . . . 463
RS-232 cable . . . 463
RS-422 cable . . . 466
6.4 GOT Side Settings . . . 468
Setting communication interface (Controller Setting) . . . 468
Communication detail settings . . . 469
6.5 PLC Side Setting . . . 478
Connecting to MELSEC iQ-R series . . . 479
Connecting to MELSEC-Q, L series . . . 480
Connection to MELSEC-QnA series . . . 483
Connecting to MELSEC-A series . . . 486
6.6 Precautions . . . 491

CHAPTER 7 BUS CONNECTION 493

7.1 Connectable Model List . . . 493
7.2 System Configuration . . . 498
Connection to QCPU . . . 498
Connection to QnACPU or AnCPU . . . 502
Connection to QnASCPU or AnSCPU . . . 505
Connection to A0J2HCPU . . . 510
Connection to Motion CPU . . . 511
7.3 GOT Side Settings . . . 521
Setting communication interface (Controller Setting) . . . 521
Communication detail settings . . . 522
7.4 Precautions . . . 532
GT15-C□EXSS-1, GT15-C□BS . . . 532
Turning the GOT ON . . . 533
Powering OFF the GOT, reapplying the power (OFF to ON) . . . 534
Reset switch on GOT . . . 534
Powering OFF or resetting the PLC . . . 534
Position of the GOT . . . 535
When the GOT is bus-connected to a PLC CPU without the communication driver written . . . 535
When designing the system . . . 535
When assigning GOT I/O signals . . . 535
Connection to a QCPU (Q mode) . . . 535
Connection to a QnA(S)CPU or An(S)CPU type . . . 537
Connection to multiple GOTs . . . 538
When using a PLC CPU in the direct mode . . . 539
Connection to a Q4ARCPU redundant system . . . 539
When monitoring Q170MCPU, Q170MSCPU(-S1) . . . 540
Troubleshooting . . . 540

CHAPTER 8 MELSECNET/H, MELSECNET/10 CONNECTION (PLC TO PLC NETWORK) 541

8.1 Connectable Model List . . . 541
PLC/Motion CPU . . . 542

CONTENTS

MELSECNET/H network module . . . 547
MELSECNET/H (NET/10 mode), MELSECNET/10 network module . . . 547
8.2 System Configuration . . . 548
Connection to optical loop system . . . 548
Connection to the coaxial bus system . . . 550
8.3 GOT Side Settings . . . 552
Setting communication interface (Controller Setting) . . . 552
Communication detail settings . . . 553
Routing parameter setting . . . 558
8.4 PLC side setting when connecting to MELSECNET/H . . . 559
System configuration . . . 559
Switch setting of MELSECNET/H network module . . . 560
Parameter setting . . . 561
[Controller Setting] of GT Designer3 . . . 567
8.5 PLC side setting when connecting to MELSECNET/10 . . . 568
Connection to MELSECNET/H network module . . . 568
Connection to MELSECNET/10 network module (QnA Series) . . . 577
Connection to MELSECNET/10 network module (A Series) . . . 585
8.6 Precautions . . . 592

CHAPTER 9 CC-Link IE TSN CONNECTION 595

9.1 Connectable Model List . . . 595
PLC/Motion CPU . . . 595
CC-Link IE TSN-equipped module . . . 601
Motion module . . . 601
9.2 System Configuration . . . 602
9.3 GOT Side Settings . . . 604
Setting communication interface (Controller Setting) . . . 604
Communication detail settings . . . 605
Routing parameter setting . . . 611
9.4 PLC Side Settings . . . 612
System configuration . . . 612
[Parameter] in GX Works3 . . . 613
[Controller Setting] in GT Designer3 . . . 617
9.5 CC-Link IE TSN Communication Unit Firmware . . . 618
Firmware versions and supported functions . . . 618
How to check the firmware version . . . 618
Firmware update . . . 619
Precautions for firmware update . . . 621
9.6 Precautions . . . 622

CHAPTER 10 CC-Link IE CONTROLLER NETWORK CONNECTION 625

10.1 Connectable Model List . . . 625
PLC/Motion CPU . . . 625
CC-Link IE Controller Network communication unit . . . 631
10.2 System Configuration . . . 632
Connection to optical loop system . . . 632
10.3 GOT side settings . . . 633
Setting communication interface (Controller Setting) . . . 633
Communication detail settings . . . 634

Routing parameter setting . . . 639
10.4 PLC Side Setting . . . 640
Connection to MELSEC iQ-R series . . . 640
Connection to C Controller / MELSECWinCPU module (MELSEC iQ-R Series) . . . 645
Connection to MELSEC-Q, L series . . . 650
10.5 Precautions . . . 661

CHAPTER 11 CC-Link IE FIELD NETWORK CONNECTION 665

11.1 Connectable Model List . . . 665
PLC/Motion CPU . . . 665
CC-Link IE Field Network communication unit . . . 671
11.2 System Configuration . . . 672
Connection to CC-Link IE Field Network communication unit . . . 672
11.3 GOT side settings . . . 674
Setting communication interface (Controller Setting) . . . 674
Communication detail settings . . . 675
Routing parameter setting . . . 681
11.4 PLC Side Setting . . . 682
Connection to MELSEC iQ-R series . . . 682
Connection to C Controller module (MELSEC iQ-R Series) . . . 685
Connection to MELSEC-Q, L series . . . 687
11.5 Precautions . . . 692

CHAPTER 12 CC-Link CONNECTION (INTELLIGENT DEVICE STATION) 695

12.1 Connectable Model List . . . 695
PLC/Motion CPU . . . 695
CC-Link module . . . 701
12.2 System Configuration . . . 702
Connection with CC-Link Ver.1 compatible . . . 702
Connection with CC-Link Ver.2 compatible . . . 704
Connection with CC-Link Ver.1/Ver.2 compatibles mixed . . . 705
12.3 GOT Side Settings . . . 706
Setting communication interface (Controller Setting) . . . 706
Communication detail settings . . . 707
12.4 PLC Side Setting . . . 712
Connection to MELSEC iQ-R Series with Ver.1 compatible . . . 714
Connection to MELSEC iQ-R Series with Ver.2 compatible . . . 717
Connection to MELSEC iQ-R Series with Ver.1/Ver.2 compatibles mixed . . . 720
Connection to C Controller / MELSECWinCPU module (MELSEC iQ-R Series) . . . 723
Connection to MELSEC-Q Series with Ver.1 compatible . . . 726
Connection to MELSEC-Q Series with Ver.2 compatible . . . 732
Connection to MELSEC-Q Series with Ver.1/Ver.2 compatibles mixed . . . 738
Connection to MELSEC-L series with CC-Link Ver.1 compatible . . . 745
Connection to MELSEC-L series with CC-Link Ver.2 compatible . . . 748
Connection to MELSEC-QnA series . . . 751
Connection to MELSEC-A series . . . 759
Connection to MELSEC iQ-F and MELSEC-FX Series with Ver.1/Ver.2 compatibles mixed . . . 768
Connection to MELSEC iQ-F Series with Ver.1/Ver.2 compatibles mixed . . . 775
12.5 Precautions . . . 778

CHAPTER 13 CC-Link CONNECTION (Via G4) 783

13.1 Connectable Model List . . . 783
PLC/Motion CPU . . . 783
CC-Link module/peripheral module . . . 788
13.2 System Configuration . . . 789
Connection to QCPU (Q mode) . . . 789
Connection to LCPU . . . 791
13.3 Connection Diagram . . . 794
RS-232 cable . . . 794
RS-422 cable . . . 795
13.4 GOT Side Settings . . . 796
Setting communication interface (Controller Setting) . . . 796
Communication detail settings . . . 797
13.5 PLC Side Settings . . . 802
Connection AJ65BT-G4-S3 . . . 802
Connection AJ65BT-R2N . . . 804
Switch setting of CC-Link module (Q series) . . . 806
[Network parameter] of GX Developer . . . 807
Parameter setting (when connecting to C Controller module (Q Series)) . . . 809
[Controller Setting] in GT Designer3 . . . 811
13.6 Precautions . . . 812

PART 3 MITSUBISHI ELECTRIC FA DEVICE CONNECTIONS

CHAPTER 14 MELIPC CONNECTION 814

14.1 Connectable Model List . . . 814
14.2 Ethernet Connection . . . 814
Connection to MELIPC(MI5122-VW) . . . 814
GOT side settings . . . 816
MELIPC Side Settings . . . 823
14.3 CC-Link IE Field Network Connection . . . 829
Connection to MELIPC(MI5122-VW) . . . 829
GOT side settings . . . 830
MELIPC Side Setting . . . 835
14.4 Settable Device Range . . . 837

CHAPTER 15 INVERTER CONNECTION 839

15.1 Connectable Model List . . . 839
15.2 Serial Connection . . . 844
Connection to FR-A500(L), FR-F500(L), or FR-V500(L) . . . 844
Connection to FR-E500, FR-S500(E), FR-F500J, FR-D700, or FR-F700PJ . . . 848
Connection to FR-E700 or sensorless servo (FR-E7□0EX) . . . 850
Connection to FR-A700, FR-F700, or FR-F700P . . . 853
Connection to FR-A800, FR-A800 Plus, FR-F800, or FR-E800 . . . 857
Connection to MELIPM . . . 863
Connection diagram . . . 865
GOT side settings . . . 875
FREQROL series inverter side settings . . . 878

Station number setting . . . 900
Precautions . . . 901
15.3 Ethernet Connection . . . 903
Connection to FR-E700, FR-A800, FR-A800 Plus, FR-F800, or FR-E800 . . . 903
GOT side settings . . . 905
Inverter side settings . . . 909
Precautions . . . 913
15.4 CC-Link IE TSN CONNECTION . . . 914
Connection to FR-A800, FR-F800, or FR-E800 . . . 914
GOT Side Settings . . . 916
PLC side settings . . . 920
Inverter side settings . . . 923
Precautions . . . 925
15.5 Connection through a PLC . . . 926
Connection to FR-E700, FR-A800, FR-A800 Plus, FR-F800, or FR-E800 . . . 926
GOT side settings . . . 927
Inverter side settings . . . 928
Precautions . . . 929
15.6 Settable Device Range . . . 930
Direct connection to inverter . . . 930
Connection to inverter through PLC . . . 930

CHAPTER 16 SERVO AMPLIFIER CONNECTION 931

16.1 Connectable Model List . . . 931
16.2 Serial Connection . . . 933
Connection to the MELSERVO-J2-Super Series . . . 933
Connection to the MELSERVO-J2M Series . . . 935
Connection to the MELSERVO-J4, J3 Series . . . 937
Connection to the MELSERVO-JE-□A Series . . . 941
Connection diagram . . . 942
GOT side settings . . . 947
Servo amplifier side settings . . . 949
Station number setting . . . 952
16.3 Ethernet Connection . . . 953
Connection to the MELSERVO-J5 or JET series . . . 953
Connection to the MELSERVO-JE-C Series . . . 956
GOT side settings . . . 958
Servo amplifier side settings . . . 964
16.4 Connection through a PLC . . . 972
Connection to MELSERVO-J4 series . . . 972
Connection to MELSERVO-J5 or JET series . . . 974
Connection to MELSERVO-JE-□B series . . . 978
GOT side settings . . . 979
16.5 Settable Device Range . . . 980
Direct connection . . . 980
Connection through Motion controller or PLC . . . 980
16.6 Precautions . . . 981

CHAPTER 17 ROBOT CONTROLLER CONNECTION 983

17.1 Connectable Model List . . . 983
17.2 System Configuration . . . 984
Connection to robot controller (CR800-D, CRnD-700) . . . 984
17.3 GOT Side Settings . . . 985
Setting communication interface (Controller Setting) . . . 985
Communication detail settings . . . 986
GOT Ethernet setting . . . 990
Connected Ethernet controller setting . . . 991
17.4 Robot Controller Side Settings . . . 992
Connection to robot controller (CR800-D) . . . 992
Connection to robot controller (CRnD-700) . . . 994
17.5 Settable Device Range . . . 997
17.6 Precautions . . . 997

CHAPTER 18 CNC CONNECTION 999

18.1 Connectable Model List . . . 999
18.2 System Configuration . . . 1000
Direct CPU connection (serial) . . . 1000
MELSECNET/10 connection (PLC to PLC network) . . . 1001
CC-Link connection (intelligent device station) . . . 1002
Ethernet connection . . . 1003
18.3 Connection Diagram . . . 1004
RS-232 cable . . . 1004
18.4 GOT Side Settings . . . 1005
Setting communication interface (Controller Setting) . . . 1005
Communication detail settings . . . 1006
GOT Ethernet setting . . . 1014
Connected Ethernet controller setting . . . 1015
18.5 CNC Side Settings . . . 1016
MELSECNET/10 connection . . . 1016
CC-Link(ID) connection to MELDAS C6/C64 . . . 1019
CC-Link(ID) connection to M800/M80, M700VS/M70V series . . . 1022
Ethernet connection . . . 1022
18.6 Settable Device Range . . . 1024
18.7 Precautions . . . 1024
Direct CPU connection (serial) . . . 1024
MELSECNET/10 connection . . . 1024
CC-Link (ID) connection . . . 1025
Ethernet connection . . . 1026

CHAPTER 19 LASER DISPLACEMENT SENSOR MH11 CONNECTION 1027

19.1 Connectable Model List . . . 1027
19.2 System Configuration . . . 1027
Connection to the Laser Displacement Sensor MH11 . . . 1027
19.3 Connection Diagram . . . 1028
RS-232 cable . . . 1028
19.4 GOT Side Settings . . . 1029
Setting the communication interface (Controller setting) . . . 1029
Communication detail settings . . . 1030

19.5 Laser Displacement Sensor MH11 Side Settings . . . 1031
Connection to laser displacement sensor MH11 . . . 1031
19.6 Settable Device Range . . . 1031

PART 4 MULTIPLE GOT CONNECTIONS

CHAPTER 20 GOT MULTI-DROP CONNECTION 1034

20.1 CPU that can be Monitored. . . . 1034
20.2 Connectable Model List . . . 1035
Direct CPU connection (serial) . . . 1035
Serial communication connection . . . 1043
[Controller Type] and [Communication driver] of GT Designer3 . . . 1051
20.3 System Configuration . . . 1052
When the RS-485 terminal block conversion unit is not used . . . 1052
When the RS-485 terminal block conversion unit is used . . . 1053
20.4 Connection Diagram . . . 1055
RS-485 cable. . . . 1055
20.5 GOT Side Settings . . . 1061
Setting communication interface (Controller Setting) . . . 1061
Communication detail settings. . . . 1062
20.6 Settings of Serial Multi-Drop Connection Unit . . . 1063
Write the OS . . . 1063
Setting communication interface (Controller Setting) . . . 1064
Setting switches. . . . 1069
20.7 Precautions . . . 1070

CHAPTER 21 MULTIPLE-GT21 CONNECTION FUNCTION 1073

21.1 Connectable Model List . . . 1073
21.2 System Configuration . . . 1074
Connection to PLC via RS-232 interface. . . . 1074
Connection to PLC via RS-422 interface. . . . 1077
21.3 Connection Diagram . . . 1080
RS-232 cable. . . . 1080
RS-422 cable. . . . 1082
21.4 GOT Side Settings . . . 1085
Setting communication interface (Controller Setting) . . . 1085
Communication detail settings. . . . 1088
21.5 Precautions . . . 1092

PART 5 MULTI-CHANNEL FUNCTION

CHAPTER 22 MULTI-CHANNEL FUNCTION 1096

22.1 What is Multi-channel Function? . . . 1096
22.2 System Configuration Example . . . 1098
Example of bus connection or serial connection . . . 1098
Example of multi-channel Ethernet connection . . . 1100
22.3 GOT Side Settings . . . 1101
Basics of interface selection . . . 1101
General flow from system selection to drawing. . . . 1103

Determining the connection type and channel No. (System selection) 1104
Determining the GOT side interface (Interface selection) 1110
Setting for communication settings 1117
Items to be checked before starting drawing 1120
22.4 Precautions 1122
Precautions for use 1122
22.5 Multi-channel Function Check Sheet 1123

PART 6 FA TRANSPARENT

CHAPTER 23 FA TRANSPARENT FUNCTION 1128

23.1 FA Transparent Function 1128
23.2 Compatible Software 1129
23.3 List of Models that Can Be Monitored 1141
23.4 System Configuration 1192
GX Series, MX Series, for C Controller module 1192
PX Developer, GX Configurator 1198
MT Developer, MT Works2 1199
MR Configurator, MR Configurator2 1203
FR Configurator, FR Configurator2 1206
FX Configurator-FP, FX Configurator-EN-L, FX Configurator-EN 1209
RT ToolBox2, RT ToolBox3 1210
NC Configurator2 1211
MI Configurator 1212
23.5 Connection Diagram 1214
RS-232 cable 1214
23.6 GOT Side Settings 1215
Setting communication interface 1215
23.7 Personal Computer Side Setting 1219
Accessing by GX Works3 1219
Accessing by CW Configurator 1257
Accessing the PLC by the PX Developer, GX Configurator 1275
Accessing by GX Works2 1282
Accessing by GX LogViewer 1310
Accessing PLC by GX Configurator-QP 1311
Accessing by the MT Developer 1313
Accessing by the MT Works2 1315
Accessing the servo amplifier by the MR Configurator 1326
Accessing the servo amplifier by the MR Configurator2 1326
Accessing the inverter by the FR Configurator 1327
Accessing the inverter by the FR Configurator2 1328
Accessing PLC by FX Configurator-FP 1336
Accessing by FX Configurator-EN-L or FX Configurator-EN 1337
Accessing by RT ToolBox3 1338
Accessing by RT ToolBox2 1351
Accessing by NC Configurator2 1355
Accessing by MELSOFT Navigator 1356
Accessing by CPU Module Logging Configuration Tool 1357
Accessing by Setting/ Monitoring tool for C Controller module 1360
Accessing by MX Component (MX Sheet) 1364

Accessing by MI Configurator 1369
23.8 Precautions 1376
Precautions common to each software 1376
When using GX Works3, GX Works2 1379
When using MT Developer, MT Works2 1381
When using MR Configurator, MR Configurator2 1381
When using FR Configurator, FR Configurator2 1382

APPENDIX 1383

Appendix 1 Settable Device Range 1383
Device setting dialog (Mitsubishi Electric equipment) 1384
[MELSEC iQ-R, RnMT/NC/RT, CR800-D], [MELSEC iQ-R, RnMT/RT, CR800-D] 1393
[MELSEC iQ-F] 1479
[MELSEC-Q/QS, Q17nD/M/NC/DR/DSR, CRnD-700], [MELSEC-Q, Q17nD/M/DR/DSR, CRnD-700] 1496
[MELSEC QnA, MELDAS C6*] 1514
[MELSEC-L]. 1518
[MELSEC-A] 1532
[MELSEC-FX] 1536
[MELSEC-WS]. 1543
[MELIPC] 1548
[MELSERVO-J2M-P8A]. 1550
[MELSERVO-J2M-*DU]. 1557
[MELSERVO-J2S-*A] 1565
[MELSERVO-J2S-*CP] 1573
[MELSERVO-J2S-*CL] 1583
[MELSERVO-J3-*A]. 1592
[MELSERVO-J3-*T]. 1602
[MELSERVO-J4-*A, -JE-*A] 1615
[MELSERVO-J4-*A-RJ] 1632
[MELSERVO-JE-*C] 1655
[MELSERVO-J5(W)-*G(-RJ), -JET-*G] 1673
[FREQROL 500/700/800, SENSORLESS SERVO] 1708
[FREQROL 800] 1717
[FREQROL 800/E700NE(Batch monitor)] 1725
[Laser Displacement Sensor MH11] 1745
REVISIONS. 1748
WARRANTY 1753
Intellectual Property Rights 1754

INTRODUCTION

Thank you for choosing Mitsubishi Electric Graphic Operation Terminal (GOT).
Before using the product, read this manual carefully and make sure you understand the functions and performance of the GOT for correct use.

☞ Manuals for GT Works3
☞ Abbreviations, Generic Terms, and Model Icons

Manuals for GT Works3

The electronic manuals related to this product are installed together with the screen design software.
If you need the printed manuals, consult your local sales office.

Manuals for GT Designer3 (GOT2000)

Point

e-Manual refers to the Mitsubishi Electric FA electronic book manuals that can be browsed using a dedicated tool.
e-Manual has the following features:

- Required information can be cross-searched in multiple manuals.
- Other manuals can be accessed from the links in the manual.
- Hardware specifications of each part can be found from the product figures.
- Pages that users often browse can be bookmarked.
- Sample programs can be copied to the engineering tool.

■Screen design software-related manuals

Manual name	Manual number (Model code)	Format
GT Works3 Installation Instructions	-	PDF
GT Designer3 (GOT2000) Screen Design Manual	SH-081220ENG (1D7ML9)	PDF e-Manual
GT Converter2 Version3 Operating Manual for GT Works3	SH-080862ENG	PDF e-Manual
GOT2000 Series MES Interface Function Manual for GT Works3 Version1	SH-081228ENG	PDF e-Manual

■Connection manuals

Manual name	Manual number (Model code)	Format
GOT2000 Series Connection Manual (Mitsubishi Electric Products) For GT Works3 Version1	SH-081197ENG (1D7MJ8)	PDF e-Manual
GOT2000 Series Connection Manual (Non-Mitsubishi Electric Products 1) For GT Works3 Version1	SH-081198ENG	PDF e-Manual
GOT2000 Series Connection Manual (Non-Mitsubishi Electric Products 2) For GT Works3 Version1	SH-081199ENG	PDF e-Manual
GOT2000 Series Connection Manual (Microcomputers, MODBUS/Fieldbus Products, Peripherals) For GT Works3 Version1	SH-081200ENG	PDF e-Manual
GOT2000 Series Handy GOT Connection Manual For GT Works3 Version1	SH-081867ENG (1D7MS9)	PDF e-Manual
GOT2000 Series Connection Manual (α2 Connection) for GT Works3 Version1	JY997D52301	PDF e-Manual

■GT SoftGOT2000 manuals

Manual name	Manual number (Model code)	Format
GT SoftGOT2000 Version1 Operating Manual	SH-081201ENG	PDF e-Manual
MELSOFT GT OPC UA Client Operating Manual	SH-082174ENG	PDF

■GOT2000 series user's manuals

Manual name	Manual number (Model code)	Format
GOT2000 Series User's Manual (Hardware)	SH-081194ENG (1D7MJ5)	PDF e-Manual
GOT2000 Series User's Manual (Utility)	SH-081195ENG (1D7MJ6)	PDF e-Manual
GOT2000 Series User's Manual (Monitor)	SH-081196ENG (1D7MJ7)	PDF e-Manual

■GOT SIMPLE series user's manuals

Manual name	Manual number	Format
GOT SIMPLE Series User's Manual	JY997D52901	PDF e-Manual

■Manuals related to GT Works3 add-on projects

Manual name	Manual number (Model code)	Format
GT Works3 Add-on License for GOT2000 Enhanced Drive Control (Servo) Project Data Manual (Fundamentals)	SH-082072ENG (1D7MV1)	PDF e-Manual
GT Works3 Add-on License for GOT2000 Enhanced Drive Control (Servo) Project Data Manual (Screen Details)	SH-082074ENG (1D7MV3)	PDF e-Manual

Manuals for GT Designer3 (GOT1000)

Refer to the Help and manuals for GT Designer3 (GOT1000).

Abbreviations, Generic Terms, and Model Icons

The following shows the abbreviations, generic terms, and model icons used in this manual.

GOT

■GOT2000 series

Abbreviations and generic terms			Description	Meaning of icon	
				Available	Unavailable
GT27	GT27-X	GT2715-X	GT2715-XTBA GT2715-XTBD	GT 27	-
	GT27-S	GT2712-S	GT2712-STBA GT2712-STWA GT2712-STBD GT2712-STWD		
		GT2710-S	GT2710-STBA GT2710-STBD		
		GT2708-S	GT2708-STBA GT2708-STBD		
	GT27-V	GT2710-V	GT2710-VTBA GT2710-VTWA GT2710-VTBD GT2710-VTWD		
		GT2708-V	GT2708-VTBA GT2708-VTBD		
		GT2705-V	GT2705-VTBD		
GT25			All GT25 models	GT 25	-
	GT25-W	GT2512-WX	GT2512-WXTBD GT2512-WXTSD	GT 25	-
		GT2510-WX	GT2510-WXTBD GT2510-WXTSD		
		GT2507-W	GT2507-WTBD GT2507-WTSD		
		GT2507T-W	GT2507T-WTSD		
	GT25-S	GT2512-S	GT2512-STBA GT2512-STBD		
		GT2512F-S	GT2512F-STNA GT2512F-STND		
	GT25-V	GT2510-V	GT2510-VTBA, GT2510-VTWA GT2510-VTBD GT2510-VTWD		
		GT2510F-V	GT2510F-VTNA GT2510F-VTND		
		GT2508-V	GT2508-VTBA GT2508-VTWA GT2508-VTBD GT2508-VTWD		
		GT2508F-V	GT2508F-VTNA GT2508F-VTND		
		GT2505-V	GT2505-VTBD		
	GT25HS-V Handy GOT	GT2506HS-V	GT2506HS-VTBD	GT 2506 HS	-
		GT2505HS-V	GT2505HS-VTBD	GT 2505 HS	-
GT23	GT23-V	GT2310-V	GT2310-VTBA GT2310-VTBD	GT 23	-
		GT2308-V	GT2308-VTBA GT2308-VTBD		

Abbreviations and generic terms			Description	Meaning of icon	
				Available	Unavailable
GT21			All GT21 models	GT 21	-
	GT21-W	GT2107-W	GT2107-WTBD GT2107-WTSD	GT 21 07W	-
	GT21-Q	GT2105-Q	GT2105-QTBDS GT2105-QMBDS	GT 21 05Q	-
	GT21-R	GT2104-R	GT2104-RTBD	GT 21 04R	-
	GT21-P	GT2104-P	GT2104-PMBD	GT 21 03P 04P ET/R4	-
			GT2104-PMBDS	GT 21 03P 04P R4	-
			GT2104-PMBDS2	GT 21 03P 04P R2	-
			GT2104-PMBLS	GT 21 03P 04P R4-5V	-
		GT2103-P	GT2103-PMBD	GT 21 03P 04P ET/R4	-
			GT2103-PMBDS	GT 21 03P 04P R4	-
			GT2103-PMBDS2	GT 21 03P 04P R2	-
			GT2103-PMBLS	GT 21 03P 04P R4-5V	-
GT SoftGOT2000			GT SoftGOT2000 Version1	Soft GOT 2000	-

■GOT SIMPLE series

Abbreviations and generic terms		Description	Meaning of icon	
			Available	Unavailable
GS25		GS2512-WXTBD	GS 25	-
GS21	GS21-W-N	GS2110-WTBD-N GS2107-WTBD-N	GS 21	-
	GS21-W	GS2110-WTBD GS2107-WTBD		

■GOT1000 series, GOT900 series, and GOT800 series

Abbreviations and generic terms	Description	Meaning of icon	
		Available	Unavailable
GOT1000 Series	GOT1000 Series	-	
GOT900 Series	GOT-A900 Series GOT-F900 Series	-	
GOT800 Series	GOT-800 Series	-	

Communication unit

Abbreviations and generic terms	Description
Bus connection unit	GT15-QBUS GT15-QBUS2 GT15-ABUS GT15-ABUS2 GT15-75QBUSL GT15-75QBUS2L GT15-75ABUSL GT15-75ABUS2L
Serial communication unit	GT15-RS2-9P GT15-RS4-9S GT15-RS4-TE
MELSECNET/H communication unit	GT15-J71LP23-25 GT15-J71BR13
CC-Link IE TSN communication unit	GT25-J71GN13-T2
CC-Link IE Controller Network communication unit	GT15-J71GP23-SX
CC-Link IE Field Network communication unit	GT15-J71GF13-T2
CC-Link communication unit	GT15-J61BT13
Wireless LAN communication unit	GT25-WLAN
Serial multi-drop connection unit	GT01-RS4-M
Connection conversion adapter	GT10-9PT5S
Field network adapter unit	GT25-FNADP
Ethernet communication unit	GT25-J71E71-100
RS-232/485 signal conversion adapter	GT14-RS2T4-9P

Option unit

Abbreviations and generic terms	Description
Printer unit	GT15-PRN
Video input unit	GT27-V4-Z (A set of GT16M-V4-Z and GT27-IF1000)
RGB input unit	GT27-R2 GT27-R2-Z (A set of GT16M-R2-Z and GT27-IF1000)
Video/RGB input unit	GT27-V4R1-Z (A set of GT16M-V4R1-Z and GT27-IF1000)
RGB output unit	GT27-ROUT GT27-ROUT-Z (A set of GT16M-ROUT-Z and GT27-IF1000)
Digital video output unit	GT27-VHOUT
Multimedia unit	GT27-MMR-Z (A set of GT16M-MMR-Z and GT27-IF1000)
Video signal conversion unit	GT27-IF1000
External I/O unit	GT15-DIO GT15-DIOR
Sound output unit	GT15-SOUT
SD card unit	GT21-03SDCD

Option

Abbreviations and generic terms	Description
SD card	NZ1MEM-2GBSD NZ1MEM-4GBSD NZ1MEM-8GBSD NZ1MEM-16GBSD L1MEM-2GBSD L1MEM-4GBSD
Battery	GT11-50BAT GT15-BAT
Protective sheet	GT27-15PSGC GT25-12WPSGC GT25-12PSGC GT25-10WPSGC GT25-10PSGC GT25-08PSGC GT21-07WPSGC GT25T-07WPSVC GT25-05PSGC GT25-05PSGC-2 GT21-05PSGC GT21-04RPSGC-UC GT21-03PSGC-UC GT21-04PSGC-UC GT27-15PSCC GT25-12WPSCC GT25-12PSCC GT25-10WPSCC GT25-10PSCC GT25-08PSCC GT25-05PSCC GT25-05PSCC-2 GT25-12PSCC-UC GT25-10PSCC-UC GT25-08PSCC-UC GT21-07WPSCC GT21-05PSCC GT21-04RPSCC-UC GT21-04PSCC-UC GT21-03PSCC-UC GT16H-60PSC GT14H-50PSC
Antibacterial/antiviral protective sheet	GT25-12PSAC GT25-10PSAC GT25-08PSAC
Environmental protection sheet	GT25F-12ESGS GT25F-10ESGS GT25F-08ESGS
Protective cover for oil	GT20-15PCO GT20-12PCO GT20-10PCO GT20-08PCO GT21-12WPCO GT21-10WPCO GT21-07WPCO GT25T-07WPCO GT25-05PCO GT25-05PCO-2 GT05-50PCO GT21-04RPCO GT10-30PCO GT10-20PCO
USB environmental protection cover	GT25-UCOV GT25-05UCOV GT21-WUCOV

Abbreviations and generic terms	Description
Stand	GT15-90STAND GT15-80STAND GT15-70STAND GT05-50STAND GT25-10WSTAND GT21-07WSTAND GT25T-07WSTAND
Attachment	GT15-70ATT-98 GT15-70ATT-87 GT15-60ATT-97 GT15-60ATT-96 GT15-60ATT-87 GT15-60ATT-77 GT21-04RATT-40
Panel-mounted USB port extension	GT14-C10EXUSB-4S GT10-C10EXUSB-5S
Connector conversion box	GT16H-CNB-42S GT16H-CNB-37S GT11H-CNB-37S
Emergency stop switch guard cover	GT16H-60ESCOV GT14H-50ESCOV
Wall-mounting attachment	GT14H-50ATT

Software

■Software related to GOT

Abbreviations and generic terms	Description
GT Works3	SW1DND-GTWK3-J, SW1DND-GTWK3-E, SW1DND-GTWK3-C
GT Designer3 Version1	Screen design software GT Designer3 for GOT2000 and GOT1000 series
GT Designer3	Screen design software for GOT2000 series included in GT Works3
GT Designer3 (GOT2000)	
GT Designer3 (GOT1000)	Screen design software for GOT1000 series included in GT Works3
Speech synthesis license	GT Works Text to Speech License (SW1DND-GTVO-M)
Add-on license	GT Works3 add-on license for GOT2000 enhanced drive control (servo) project data (SW1DND-GTSV-MZ)
GENESIS64 Advanced	GENESIS64 server application (GEN64-APP)
GENESIS64 Basic SCADA	GENESIS64 server application (GEN64-BASIC)
GENESIS64	Generic term of GENESIS64 Advanced and GENESIS64 Basic SCADA
GOT Mobile function license for GT SoftGOT2000	License required to use the GOT Mobile function with GT SoftGOT2000 (SGT2K-WEBSKEY-□)
GT Simulator3	Screen simulator GT Simulator3 for GOT2000, GOT1000, and GOT900 series
GT SoftGOT2000	GOT2000 compatible HMI software GT SoftGOT2000
GT OPC UA Client	MELSOFT GT OPC UA Client (SW1DNN-GTOUC-MD)
GT Converter2	Data conversion software GT Converter2 for GOT1000 and GOT900 series
GT Designer2 Classic	Screen design software GT Designer2 Classic for GOT900 series
GT Designer2	Screen design software GT Designer2 for GOT1000 and GOT900 series
DU/WIN	Screen design software FX-PCS-DU/WIN for GOT-F900 series

■Software related to iQ Works

Abbreviations and generic terms	Description
iQ Works	iQ Platform compatible engineering environment MELSOFT iQ Works
MELSOFT Navigator	Integrated development environment software included in SW □ DND-IQWK (iQ Platform compatible engineering environment MELSOFT iQ Works) (□ represents a version.)
MELSOFT iQ AppPortal	SW□DND-IQAPL-M type integrated application management software (□ represents a version.)

■Other software

Abbreviations and generic terms		Description
GX Works3		SW □ DND-GXW3-E (-EA, -EAZ) type programmable controller engineering software (□ represents a version.)
GX Works2		SW □ DNC-GXW2-E (-EA, -EAZ) type programmable controller engineering software (□ represents a version.)
Controller simulator	GX Simulator3	Simulation function of GX Works3
	GX Simulator2	Simulation function of GX Works2
	GX Simulator	SW □ D5C-LLT-E (-EV) type ladder logic test tool function software package (SW5D5C-LLT (-V) or later versions) (□ represents a version.)
GX Developer		SW □ D5C-GPPW-E (-EV)/SW □ D5F-GPPW (-V) type software package (□ represents a version.)
GX LogViewer		SW □ DNN-VIEWER-E type software package (□ represents a version.)
MI Configurator		Configuration and monitor tool for Mitsubishi Electric industrial computers (SW□DNNMICONF-M) (□ represents a version.)
PX Developer		SW □ D5C-FBDQ-E type FBD software package for process control (□ represents a version.)
MT Works2		Motion controller engineering environment MELSOFT MT Works2 (SW □ DNDMTW2-E) (□ represents a version.)
MT Developer		SW□RNC-GSV type integrated start-up support software for motion controller Q series (□ represents a version.)
CW Configurator		Setting/monitoring tools for the C Controller module and MELSECWinCPU (SW□DND-RCCPU-E) (□ represents a version.)
MR Configurator2		SW □ DNC-MRC2-E type servo configuration software (□ represents a version.)
MR Configurator		MRZJW□-SETUP type servo configuration software (□ represents a version.)
FR Configurator2		Inverter setup software (SW □ DND-FRC2-E) (□ represents a version.)
FR Configurator		Inverter setup software (FR-SW □ -SETUP-WE) (□ represents a version.)
NC Configurator2		CNC parameter setting support tool (FCSB1221)
NC Configurator		CNC parameter setting support tool
FX Configurator-FP		Parameter setting, monitoring, and testing software package for FX3U-20SSCH (SW □ D5CFXSSCE) (□ represents a version.)
FX Configurator-EN-L		FX3U-ENET-L type Ethernet module setting software (SW1D5-FXENETL-E)
FX Configurator-EN		FX3U-ENET type Ethernet module setting software (SW1D5C-FXENET-E)
RT ToolBox2		Robot program creation software (3D-11C-WINE)
RT ToolBox3		Robot program creation software (3F-14C-WINE)
MX Component		MX Component Version □ (SW □ D5C-ACT-E, SW □ D5C-ACT-EA) (□ represents a version.)
MX Sheet		MX Sheet Version □ (SW □ D5C-SHEET-E, SW □ D5C-SHEET-EA) (□ represents a version.)
CPU Module Logging Configuration Tool		CPU module logging configuration tool (SW1DNN-LLUTL-E)

License key (for GT SoftGOT2000)

Abbreviations and generic terms	Description
License key	GT27-SGTKEY-U

Others

Abbreviations and generic terms	Description
IAI	IAI Corporation
AZBIL	Azbil Corporation
OMRON	OMRON Corporation
KEYENCE	KEYENCE CORPORATION
JTEKT ELECTRONICS (formerly KOYO EI)	JTEKT ELECTRONICS CORPORATION (formerly KOYO ELECTRONICS INDUSTRIES CO., LTD.)
JTEKT	JTEKT CORPORATION
SHARP	Sharp Corporation
SHINKO	Shinko Technos Co., Ltd.
CHINO	CHINO CORPORATION
TOSHIBA	TOSHIBA CORPORATION
SHIBAURA MACHINE	SHIBAURA MACHINE CO., LTD.
PANASONIC	Panasonic Corporation
PANASONIC IDS	Panasonic Industrial Devices SUNX Co., Ltd.
HITACHI IES	Hitachi Industrial Equipment Systems Co., Ltd.
HITACHI	Hitachi, Ltd.
HIRATA	Hirata Corporation
FUJI	FUJI ELECTRIC CO., LTD.
MURATEC	Muratec products manufactured by Murata Machinery, Ltd.
YASKAWA	YASKAWA Electric Corporation
YOKOGAWA	Yokogawa Electric Corporation
RKC	RKC INSTRUMENT INC.
ALLEN-BRADLEY	Allen-Bradley products manufactured by Rockwell Automation, Inc.
CLPA	CC-Link Partner Association
GE	GE Intelligent Platforms, Inc.
HMS	HMS Industrial Networks
LS ELECTRIC (formerly LS IS)	LS ELECTRIC Co., Ltd (formerly LS Industrial Systems Co., Ltd.)
MITSUBISHI INDIA	Mitsubishi Electric India Pvt. Ltd.
ODVA	Open DeviceNet Vendor Association, Inc.
SCHNEIDER	Schneider Electric SA
SICK	SICK AG
SIEMENS	Siemens AG
SCHNEIDER EJH	Schneider Electric Japan Holdings Ltd.
PLC	Programmable controller manufactured by its respective company
Control equipment	Control equipment manufactured by its respective company
Temperature controller	Temperature controller manufactured by its respective company
Indicating controller	Indicating controller manufactured by its respective company
Controller	Controller manufactured by its respective company
Industrial switch (for CC-Link IE TSN Class B)	CC-Link IE TSN Class B (Synchronized Realtime Communication) hub certified by CC-Link Partner Association
Industrial switch (for CC-Link IE TSN Class A)	CC-Link IE TSN Class A (Realtime Communication) hub certified by CC-Link Partner Association
CC-Link IE TSN-equipped module	Generic term for the following CC-Link IE TSN master/local modules and CC-Link IE TSN Plus master/local module • RJ71GN11-T2 • RJ71GN11-EIP • FX5-CCLGN-MS

PART 1 PREPARATORY PROCEDURES FOR MONITORING

1 PREPARATORY PROCEDURES FOR MONITORING

- Page 35 Setting the Communication Interface
- Page 57 Writing the Package Data onto the GOT
- Page 59 Option Devices for the Respective Connection
- Page 64 Connection Cables for the Respective Connection
- Page 75 Verifying GOT Recognizes Connected Equipment
- Page 77 Checking for Normal Monitoring

The following shows the procedures to be taken before monitoring and corresponding reference sections.

1. Setting the communication interface

Determine the connection type and channel No. to be used, and perform the communication setting.

☞ Page 35 Setting the Communication Interface

☞ Each chapter GOT Side Settings

2. Writing the package data

Write the project data, system application onto the GOT.

☞ Page 57 Writing the Package Data onto the GOT

3. Verifying the package data

Verify the project data, system application are properly written onto the GOT.

☞ Page 58 Checking the package data writing on GOT

4. Attaching the communication unit and connecting the cable

Mount the optional equipment and prepare/connect the connection cable according to the connection type.

☞ Page 59 Option Devices for the Respective Connection

☞ Page 64 Connection Cables for the Respective Connection

☞ Each chapter System Configuration

☞ Each chapter Connection Diagram

5. Verifying GOT recognizes connected equipment

Verify the GOT recognizes controllers on [Communication Settings] of the Utility.

☞ Page 75 Verifying GOT Recognizes Connected Equipment

6. Verifying the GOT is monitoring normally

Verify the GOT is monitoring normally using Utility, Developer, etc.

☞ Page 77 Checking for Normal Monitoring

1.1 Setting the Communication Interface

Set the communication interface of GOT and the connected equipment.
When using the GOT at the first time, make sure to set the channel of communication interface and the communication driver before writing to GOT.
Set the communication interface of the GOT at [Controller Setting] and [I/F Communication Setting] in GT Designer3.

Point

When using the parameter reflection function of MELSOFT Navigator

The system configuration of MELSOFT Navigator can be reflected to the project of GT Designer3 using the parameter function of MELSOFT Navigator.

For details of the parameter functions of MELSOFT Navigator, refer to the following.

Help of MELSOFT Navigator

- The color of the cells for the items which are reflected to GT Designer3 from MELSOFT Navigator changes to green. Set items, which are displayed in green cells, from the MELSOFT Navigator. When changing in GT Designer3, refer to the following (3).

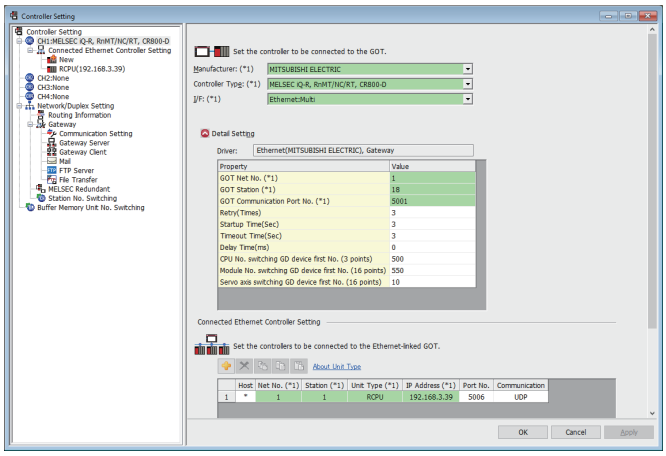

- When setting the communication interface for the connection with the iQ Works untargeted equipment, set [Set by GT Designer3] to the channel connected at [Configuration detailed information input] in MELSOFT Navigator and make the settings at [Controller Setting] in GT Designer3.
- To make the items reflected from MELSOFT Navigator editable on GT Designer3, select the [Option] menu and put a check mark at [Enable an editing of parameters set in MELSOFT Navigator] in the [iQ Works Interaction] tab.

However, when the items set in MELSOFT Navigator are edited in GT Designer3, the interaction function with MELSOFT Navigator is unavailable due to a mismatch with the system configuration of MELSOFT Navigator. Eliminate mismatches using the parameter verification function etc. before using the interaction function of MELSOFT Navigator.

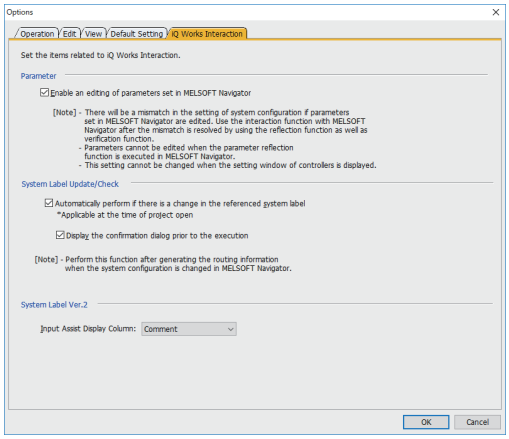

Setting connected equipment (Channel setting)

Set the channel of the equipment connected to the GOT.

Setting

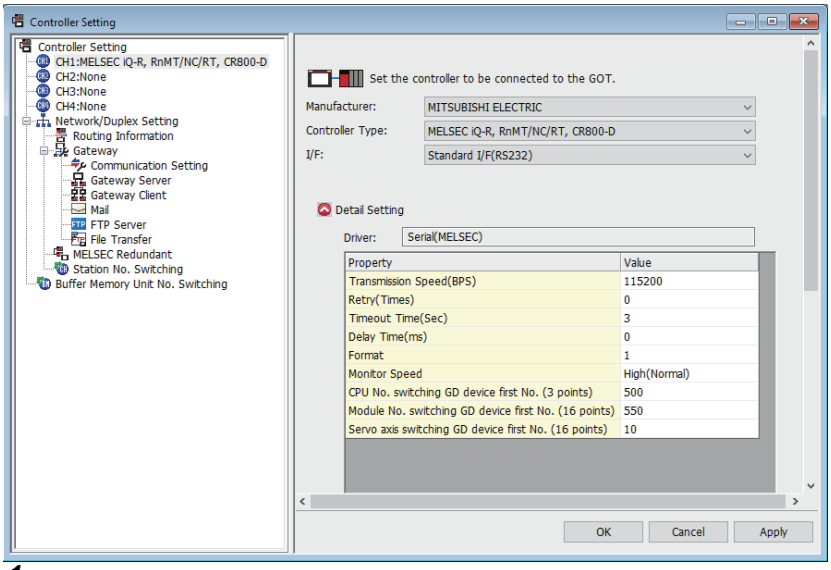

1. Select [Common] → [Controller Setting] from the menu.
2. The Controller Setting dialog box appears. Select the channel No. to be used from the list menu.
3. Refer to the following explanations for the setting.

Point

Channel No.2 to No.4

Use the channel No.2 to No.4 when using the Multi-channel function.

For details of the Multi-channel function, refer to the following.

☞ Page 1096 MULTI-CHANNEL FUNCTION

Setting item

This section describes the setting items of the Manufacturer, Controller Type, Driver and I/F.

When using the channel No.2 to No.4, put a check mark at [Use CH*].

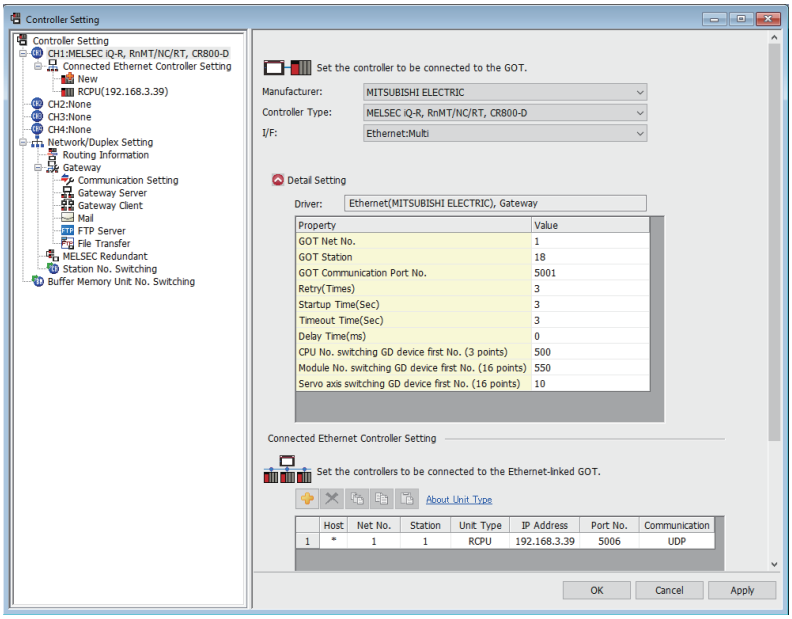

Item	Description
Use CH*	Select this item when setting the channel No.2 to No.4.
Manufacturer	Select the manufacturer of the equipment to be connected to the GOT.
Type	Select the type of the equipment to be connected to the GOT. For the settings, refer to the following. ☞ Page 39 Setting [Controller Type]
I/F	Select the interface of the GOT to which the equipment is connected. For the settings, refer to the following. ☞ Page 49 Setting [I/F]
Driver	Select the communication driver to be written to the GOT. For the settings, refer to the following. ☞ Page 38 Setting [Driver] When multiple communication drivers can be selected, this item is displayed. When only one communication driver can be selected, the driver name is displayed under [Detail Setting].
Detail Setting	Make settings for the transmission speed and data length of the communication driver. ☞ Refer to each chapter of the equipment to be connected to the GOT.

■Setting [Driver]

The displayed items for a driver differ according to the settings [Manufacturer], [Controller Type] and [I/F].

When the driver to be set is not displayed, confirm if [Manufacturer], [Controller Type] and [I/F] are correct.

For the settings, refer to the following.

☞ [Setting the communication interface] section in each chapter

■Setting [Controller Type]

The type differs depending on the PLC to be used.

For the settings, refer to the following.

Type	Model name
<For GT27, GT25, GT23, and GS25> [MELSEC iQ-R, RnMT/NC/RT,CR800-D] <For GT21 and GS21> [MELSEC iQ-R, RnMT/RT,CR800-D]	R00CPU R01CPU R02CPU R04CPU R08CPU R16CPU R32CPU R120CPU
	R16MTCPU R32MTCPU R64MTCPU
	R08PCPU R16PCPU R32PCPU R120PCPU
	R04ENCPU R08ENCPU R16ENCPU R32ENCPU R120ENCPU
	R08PSFCPU R16PSFCPU R32PSFCPU R120PSFCPU
	R08SFCPU R16SFCPU R32SFCPU R120SFCPU
	R12CCPU-V
	R102WCPU-W
	CNC C80 *2 (R16NCCPU-S1)
	CR800-R(R16RTCPU) CR800-D
	MR-J5-□B*1 MR-J5-□B-RJ*1 MR-J5W2-□B*1 MR-J5W3-□B*1 MR-J5-□G*6 MR-J5-□G-RJ*6 MR-J5W2-□G*6 MR-J5W3-□G*6 MR-J4-□B*1 MR-J4-□B-RJ*1 MR-J4W2-□B*1 MR-J4W3-□B*1 MR-J4-□GF*1 MR-J4-□GF-RJ*1 MR-JE-*B *1 MR-JE-*BF *1

Type	Model name
<For GT27, GT25, GT23, and GS25> [MELSEC iQ-R, RnMT/NC/RT,CR800-D] <For GT21 and GS21> [MELSEC iQ-R, RnMT/RT,CR800-D]	FR-E7□0-NE *4 FR-A8□0 *4*5 FR-A8□2 *4*5 FR-A8□6 *4*5 FR-A8□0-E *4 FR-A8□2-E *4 FR-A8□6-E *4 FR-A8□0-GF *4 FR-A8□2-GF *4 FR-A8□0-GN *4*5 FR-A8□2-GN *4*5 FR-A8□0-CRN *4 FR-A8□2-CRN *4 FR-A8□0-R2R *4 FR-A8□2-R2R *4 FR-A8□0-AWH*4 FR-A8□0-LC*4 FR-A8□0-E-CRN *4 FR-A8□2-E-CRN *4 FR-A8□0-E-R2R *4 FR-A8□2-E-R2R *4 FR-A8□0-E-AWH*4 FR-A8□0-E-LC*4 FR-F8□0 *4*5 FR-F8□2 *4*5 FR-F8□6 *4*5 FR-F8□0-E *4 FR-F8□2-E *4 FR-E8□0-E *4*5
[MELSEC iQ-F]	FX5U FX5UC FX5UJ FX5S
	MR-J4-*B *1 MR-JE-*B *1

Type	Model name
<For GT27, GT25, GT23, and GS25> [MELSEC-Q/QS, Q17nD/M/NC/DR/DSR, CRnD-700] <For GT21 and GS21> [MELSEC-Q, Q17nD/M/DR/DSR, CRnD-700]	Q00CPU Q01CPU Q02CPU
	Q02HCPU Q06HCPU Q12HCPU Q25HCPU
	Q02PHCPU Q06PHCPU Q12PHCPU Q25PHCPU
	Q172CPU Q173CPU Q172CPUN Q173CPUN Q172HCPU Q173HCPU
	Q00UJCPU Q00UJCPU-S8
	Q00UCPU
	Q01UCPU
	Q02UCPU
	Q03UDCPU
	Q04UDHCPU Q06UDHCPU Q10UDHCPU Q13UDHCPU Q20UDHCPU Q26UDHCPU
	Q03UDECPU Q04UDEHCPU Q06UDEHCPU Q10UDEHCPU Q13UDEHCPU Q20UDEHCPU Q26UDEHCPU Q50UDEHCPU Q100UDEHCPU
	Q03UDVCPU Q04UDVCPU Q06UDVCPU Q13UDVCPU Q26UDVCPU
	Q12DCCPU-V Q24DHCCPU-V/VG Q24DHCCPU-LS Q26DHCCPU-LS
	Q172DCPU Q173DCPU Q172DCPU-S1 Q173DCPU-S1
	Q172DSCPU Q173DSCPU Q170MCPU Q170MSCPU Q170MSCPU-S1
	MR-MQ100
	CNC C70 *2 (Q173NCCPU)

Type	Model name
<For GT27, GT25, GT23, and GS25> [MELSEC-Q/QS, Q17nD/M/NC/DR/DSR, CRnD-700] <For GT21 and GS21> [MELSEC-Q, Q17nD/M/DR/DSR, CRnD-700]	CRnQ-700(Q172DRCPU) CR750-Q(Q172DRCPU) CR751-Q(Q172DRCPU) CR800-Q(Q172DSRCPU)
	CRnD-700 CR750-D CR751-D
	Q00JCPU
	Q00CPU
	Q01CPU
	Q02CPU
	Q02HCPU Q06HCPU Q12HCPU Q25HCPU
	Q02PHCPU Q06PHCPU Q12PHCPU Q25PHCPU
	Q12PRHCPU Q25PRHCPU
	QS001CPU
	MR-J5-□B*1 MR-J5-□B-RJ*1 MR-J5W2-□B*1 MR-J5W3-□B*1 MR-J4-□B*1 MR-J4-□B-RJ*1 MR-J4W2-□B*1 MR-J4W3-□B*1 MR-J4-□GF*1 MR-J4-□GF-RJ*1 MR-JE-*B *1
	FR-E7□0-NE *4 FR-A8□0 *4 FR-A8□2 *4 FR-A8□6 *4 FR-A8□0-E *4 FR-A8□2-E *4 FR-A8□6-E *4 FR-A8□0-GF *4 FR-A8□2-GF *4 FR-A8□0-GN *4 FR-A8□2-GN *4 FR-A8□0-CRN *4 FR-A8□2-CRN *4 FR-A8□0-R2R *4 FR-A8□2-R2R *4 FR-A8□0-AWH*4 FR-A8□0-LC*4 FR-A8□0-E-CRN *4 FR-A8□2-E-CRN *4 FR-A8□0-E-R2R *4 FR-A8□2-E-R2R *4 FR-A8□0-E-AWH*4 FR-A8□0-E-LC*4 FR-F8□0 *4 FR-F8□2 *4 FR-F8□6 *4 FR-F8□0-E *4 FR-F8□2-E *4 FR-E8□0-E *4

Type	Model name
[MELSEC-QnA, MELDAS C6*]	Q2ACPU Q2ACPU-S1 Q3ACPU Q4ACPU
	Q4ARCPU
	Q2ASCPU
	Q2ASCPU-S1
	Q2ASHCPU
	Q2ASHCPU-S1
	MELDAS C6 (FCA C6) MELDAS C64 (FCA C64)
	M700VS/M70V
	M800/M80
[MELSEC-L]	L02CPU L06CPU L26CPU L26CPU-BT L02CPU-P L06CPU-P L26CPU-P L26CPU-PBT L02SCPU L02SCPU-P NZ2GF-ETB
	MR-J4-*B *1 MR-JE-*B *1 MR-JE-*BF *1
	FR-E7□0-NE *4 FR-A8□0 *4 FR-A8□2 *4 FR-A8□6 *4 FR-A8□0-E *4 FR-A8□2-E *4 FR-A8□6-E *4 FR-A8□0-GF *4 FR-A8□2-GF *4 FR-A8□0-GN *4 FR-A8□2-GN *4 FR-A8□0-CRN *4 FR-A8□2-CRN *4 FR-A8□0-R2R *4 FR-A8□2-R2R *4 FR-A8□0-AWH*4 FR-A8□0-LC*4 FR-A8□0-E-CRN *4 FR-A8□2-E-CRN *4 FR-A8□0-E-R2R *4 FR-A8□2-E-R2R *4 FR-A8□0-E-AWH*4 FR-A8□0-E-LC*4 FR-F8□0 *4 FR-F8□2 *4 FR-F8□6 *4 FR-F8□0-E *4 FR-F8□2-E *4 FR-E8□0-E *4

Type	Model name
[MELSEC-A]	A2UCPU
	A2UCPU-S1
	A3UCPU
	A4UCPU
	A2ACPU
	A2ACPUP21
	A2ACPUR21
	A2ACPU-S1
	A2ACPUP21-S1
	A2ACPUR21-S1
	A3ACPU
	A3ACPUP21
	A3ACPUR21
	A1NCPU
	A1NCPUP21
	A1NCPUR21
	A2NCPU
	A2NCPUP21
	A2NCPUR21
	A2NCPU-S1
	A2NCPUP21-S1
	A2NCPUR21-S1
	A3NCPU
	A3NCPUP21
	A3NCPUR21
	A2USCPU
	A2USCPU-S1
	A2USHCPU-S1
	A1SCPU
	A1SCPUC24-R2
	A1SHCPU
	A2SCPU
	A2SHCPU
	A1SJCPU
	A1SJCPU-S3
	A1SJHCPU
	A0J2HCPU
	A0J2HCPUP21
	A0J2HCPUR21
	A0J2HCPU-DC24
	A2CCPU
	A2CCPUP21
	A2CCPUR21
	A2CCPUC24
	A2CCPUC24-PRF
	A2CJCPU-S3
	A1FXCPU
	A273UCPU
	A273UHCPU
	A273UHCPU-S3
	A373UCPU
	A373UCPU-S3

Type	Model name
[MELSEC-A]	A171SCPU
	A171SCPU-S3
	A171SCPU-S3N
	A171SHCPU
	A171SHCPUN
	A172SHCPU
	A172SHCPUN
	A173UHCPU
	A173UHCPU-S1
[MELSEC-FX]	FX0
	FX0S
	FX0N
	FX1
	FX2
	FX2C
	FX1S
	FX1N
	FX2N
	FX1NC
	FX2NC
	FX3S
	FX3G
	FX3GC
	FX3GE
	FX3U
	FX3UC
[MELSEC-WS]	WS0-CPU0
	WS0-CPU1
	WS0-CPU3
[MELIPC]	MI5122-VW
[MELSERVO-J2M-P8A]	MR-J2M-P8A
[MELSERVO-J2M-*DU]	MR-J2M-*DU
[MELSERVO-J2S-*A]	MR-J2S-*A
[MELSERVO-J2S-*CP]	MR-J2S-*CP
[MELSERVO-J2S-*CL]	MR-J2S-*CL
[MELSERVO-J3-*A]	MR-J3-*A
[MELSERVO-J3-*T]	MR-J3-*T
[MELSERVO-J4-*A, -JE-*A]	MR-J4-*A MR-JE-*A
[MELSERVO-J4-*A-RJ]	MR-J4-*A-RJ
[MELSERVO-J5(W)-*G(-RJ), -JET-*G]	MR-J5-G(-RJ) MR-J5W2-G MR-J5W3-G MR-J5D-*G4 MR-JET-G
[MELSERVO-JE-*C]	MR-JE-*C

Type	Model name
[FREQROL 500/700/800 Series, SENSORLESS SERVO]	FR-A5□0(L)
	FR-F5□0(L)
	FR-V5□0(L)
	FR-E5□0(C)
	FR-E5□0S
	FR-E5□0W
	FR-S5□0(E)(-R)(-C)
	FR-S5□0S(E)(-R)
	FR-S5□0W(E)(-R)
	FR-F5□0J(F)
	FR-D7□0
	FR-D7□0S
	FR-D7□0W
	FR-F7□0PJ(F)
	FR-E7□0
	FR-E7□0S
	FR-E7□0W
	FR-A7□0 *3
	FR-F7□0
	FR-F7□0P
	FR-A8□0 *3
	FR-A8□2 *3
	FR-A8□6 *3
	FR-A8□0-E *3
	FR-A8□2-E *3
	FR-A8□6-E *3
	FR-A8□0-CRN
	FR-A8□2-CRN
	FR-A8□0-R2R
	FR-A8□2-R2R
	FR-A8□0-AWH
	FR-A8□0-LC
	FR-A8□0-E-CRN
	FR-A8□2-E-CRN
	FR-A8□0-E-R2R
	FR-A8□2-E-R2R
	FR-A8□0-E-AWH
	FR-A8□0-E-LC
	FR-F8□0
	FR-F8□2
	FR-F8□6
	FR-F8□0-E
	FR-F8□2-E
	FR-E8□0
	FR-E7□0EX
	MD-CX522-□K(-A0)

Type	Model name
[FREQROL 800]	FR-A8□0 *3
	FR-A8□2 *3
	FR-A8□6 *3
	FR-A8□0-E *3
	FR-A8□2-E *3
	FR-A8□6-E *3
	FR-A8□0-CRN
	FR-A8□2-CRN
	FR-A8□0-R2R
	FR-A8□2-R2R
	FR-A8□0-AWH
	FR-A8□0-LC
	FR-A8□0-E-CRN
	FR-A8□2-E-CRN
	FR-A8□0-E-R2R
	FR-A8□2-E-R2R
	FR-A8□0-E-AWH
	FR-A8□0-E-LC
	FR-F8□0
	FR-F8□2
	FR-F8□6
	FR-F8□0-E
	FR-F8□2-E
	FR-E8□0
	FRE8□0-E
[FREQROL 800/E700NE (Batch monitor)]	FR-E7□0-NE
	FR-A8□0
	FR-A8□2
	FR-A8□6
	FR-A8□0-GF
	FR-A8□2-GF
	FR-A8□0-E
	FR-A8□2-E
	FR-A8□6-E
	FR-A8□0-CRN
	FR-A8□2-CRN
	FR-A8□0-R2R
	FR-A8□2-R2R
	FR-A8□0-AWH
	FR-A8□0-LC
	FR-A8□0-E-CRN
	FR-A8□2-E-CRN
	FR-A8□0-E-R2R
	FR-A8□2-E-R2R
	FR-A8□0-E-AWH
	FR-A8□0-E-LC
	FR-F8□0
	FR-F8□2
	FR-F8□6
	FR-F8□0-E
	FR-F8□2-E
	FR-E8□0
	FRE8□0-E

Type	Model name
[Laser Displacement Sensor MH11]	MH11CTMF-N
	MH11CTMF-NNA
	MH11CTMF-P
	MH11CTMF-PNA

*1 The models are connected to the GOT through a Motion controller or Simple Motion module.
*2 The models cannot be connected with GT21 and GS21.
*3 The GOT supports the FR-B/B3 series which is the explosion proof type of FR-A700 series and FR-A800 series.
*4 The models are connected to the GOT through a PLC.
*5 The models can be connected as a remote station of CC-Link IE TSN.
*6 The models are connected to the GOT through a Motion module.

■Setting [I/F]

The interface differs depending on the GOT to be used.

Set the I/F according to the connection and the position of communication unit to be mounted onto the GOT.

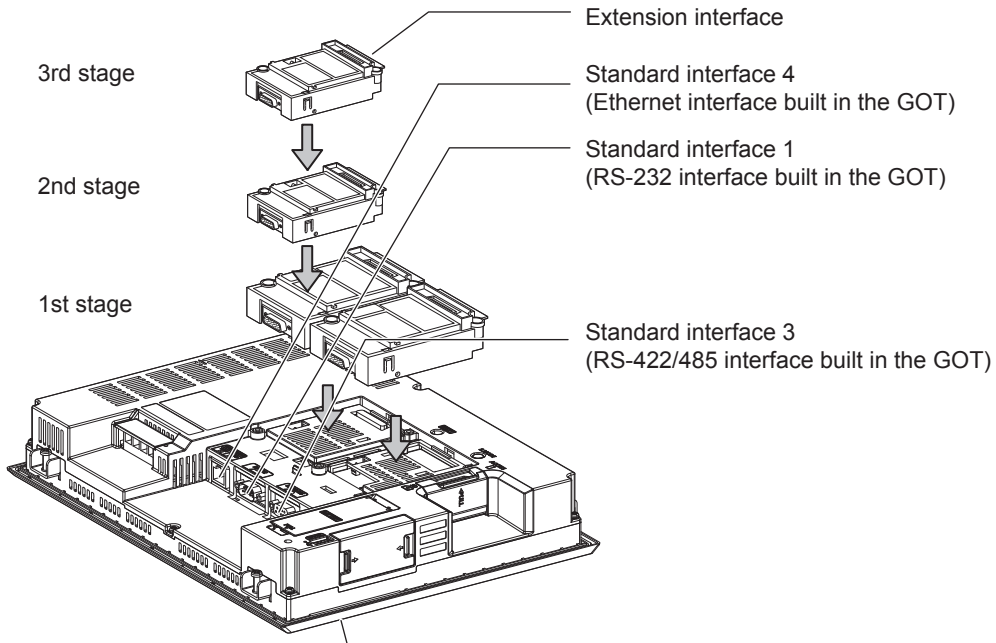

(Example: In the case of the GT27)

GOT Ethernet Setting

The GOT can be connected to a different network by using the following network.

1) GOT IP Address Setting

Set the following communication port setting.

Standard port (When using GT25-W or GS25: Port 1)

Set [GOT IP Address] and [Subnet Mask] in the standard port with a built-in GOT, or port 1.

Extended port (When using GT25-W or GS25: Port 2)

Set [GOT IP Address] and [Subnet Mask] in the extended port (the Ethernet interface for the Ethernet communication module), or port 2 with a built-in GOT.

When using any GOTs other than GT25-W and GS25, install BootOS version Z or later to use the extended port.

For details on writing the BootOS, refer to the following manual.

📖GT Designer3 (GOT2000) Screen Design Manual

Wireless LAN

Set [GOT IP Address], [Subnet Mask], [Peripheral S/W Communication Port No.], and [Transparent Port No.] for the wireless LAN interface.

2) GOT Ethernet Common Setting

Set the following setting which is common to the standard port and the extended port, or port 1 and port 2.

- [Default Gateway]
- [Peripheral S/W Communication Port No.]
- [Transparent Port No.]

3) IP Filter Setting

By configuring the IP filter setting, the access from the specific IP address can be permitted or shut off.

GOT IP Address Setting

Set the GOT IP address.

■[Standard Port] or [Port 1]

The following shows an example for [Standard Port].

1. Select [Common] → [GOT Ethernet Setting] → [GOT IP Address Setting] from the menu to display the [GOT Ethernet Setting] window.

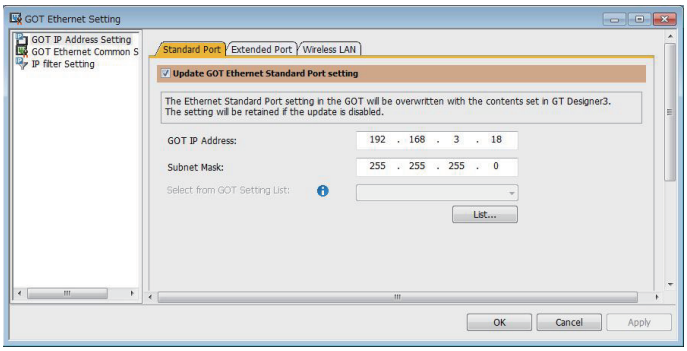

2. On the [Standard Port] tab, configure the following settings.

Item	Description	Range
Update GOT Ethernet standard port setting	The GOT Ethernet standard port settings are applied on GOT.	-
GOT IP Address	Set the IP address of the GOT IP Address. (Default:192.168.3.18)	0.0.0.0 to 255.255.255.255
Subnet Mask	Set the subnet mask for the sub network. (Only for connection via router) If the sub network is not used, the default value is set. (Default: 255.255.255.0)	0.0.0.0 to 255.255.255.255
Select from GOT Setting List	Select the GOT set in [GOT Setting List] dialog. 📖GT Designer3 (GOT2000) Screen Design Manual	-

■[Extended Port], or [Port 2]

The following shows an example for [Extended Port].

1. Select [Common] → [GOT Ethernet Setting] → [GOT IP Address Setting] from the menu to display the [GOT Ethernet Setting] window.

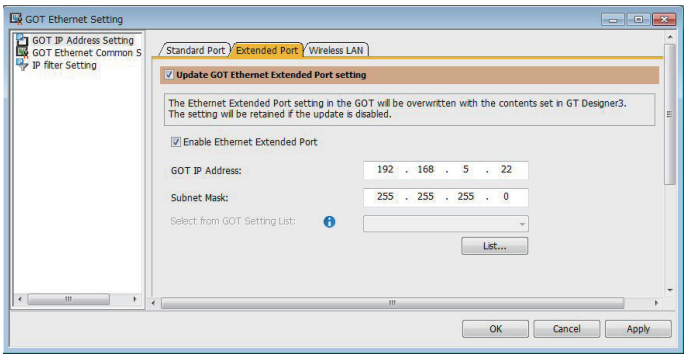

2. On the [Extended Port] tab, configure the following settings.

Item	Description	Range
Update GOT Ethernet extended port setting	The GOT Ethernet extended port settings are applied on GOT.	-
Enable Ethernet extended port	Enable the ethernet extended port.	-
GOT IP Address	Set the IP address of the GOT IP Address. (Default:192.168.5.22)	0.0.0.0 to 255.255.255.255
Subnet Mask	Set the subnet mask for the sub network. (Only for connection via router) If the sub network is not used, the default value is set. (Default: 255.255.255.0)	0.0.0.0 to 255.255.255.255
Select from GOT Setting List	Select the GOT set in [GOT Setting List] dialog. 📖GT Designer3 (GOT2000) Screen Design Manual	-

■[Wireless LAN]

1. Select [Common] → [GOT Ethernet Setting] → [GOT IP Address Setting] from the menu to display the [GOT Ethernet Setting] window.

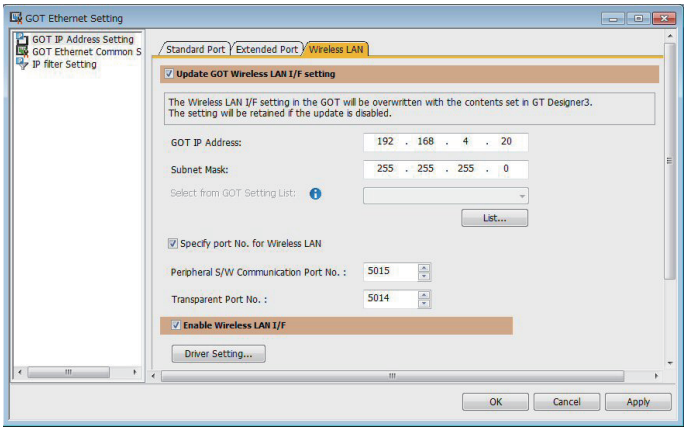

2. On the [Wireless LAN] tab, configure the following settings.

Item	Description	Range
Update GOT Wireless LAN I/F setting	The wireless LAN interface settings are applied on GOT.	-
Enable Wireless LAN I/F	Enable the wireless LAN.	-
GOT IP Address	Set the IP address of the wireless LAN I/F. (Default:192.168.4.20)	0.0.0.0 to 255.255.255.255
Subnet Mask	Set the subnet mask for the sub network. (Only for connection via router) If the sub network is not used, the default value is set. (Default: 255.255.255.0)	0.0.0.0 to 255.255.255.255
Select from GOT Setting List	Select the GOT set in [GOT Setting List] dialog. 📖GT Designer3 (GOT2000) Screen Design Manual	-
Specify port No. for Wireless LAN	Enable the port number setting for the wireless LAN separately from GOT Ethernet common setting.	-
Peripheral S/W Communication Port No.	Set the GOT port No. for the communication with the peripheral S/W. (Default: 5015)	1024 to 65534 (Except for 5011 to 5013, 49153 to 49170)
Transparent Port No.	Set the GOT port No. for the transparent function. (Default: 5014)	1024 to 65534 (Except for 5011 to 5013, 49153 to 49170)
Driver setting	Display [Detail Settings] dialog, 📖GT Designer3 (GOT2000) Screen Design Manual	-

Point

GOT IP address

For GOT IP address of each Ethernet setting, set a value that network system is different from each other.

(When the subnet mask is [255.255.255.0])

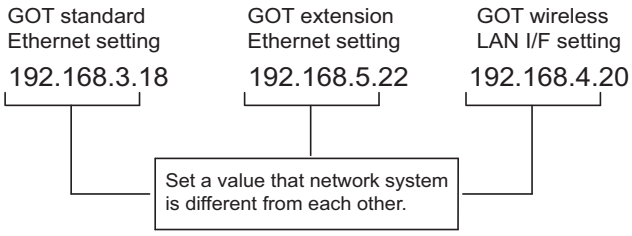

GOT Ethernet Common Setting

Set the following setting which is common to the standard port and the extended port, or port 1 and port 2.

1. Select [Common] → [GOT Ethernet Setting] → [GOT Ethernet Common Setting] from the menu to display the [GOT Ethernet Setting] window.

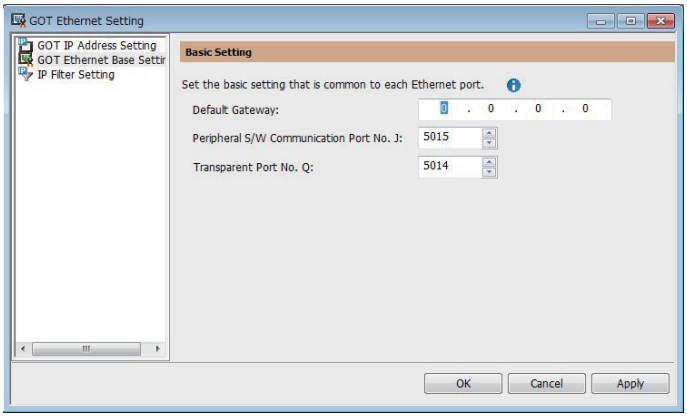

2. Configure the following settings.

Item	Description	Range
Default Gateway	Set the router address of the default gateway where the GOT is connected. (Only for connection via router) (Default: 0.0.0.0)	0.0.0.0 to 255.255.255.255
Peripheral S/W Communication Port No.	Set the GOT port No. for the communication with the peripheral S/W. (Default: 5015)	1024 to 65534 (Except for 5011 to 5013, 49153 to 49170)
Transparent Port No.	Set the GOT port No. for the transparent function. (Default: 5014)	1024 to 65534 (Except for 5011 to 5013, 49153 to 49170)

IP Filter Setting

1. Select [Common] → [GOT Ethernet Setting] → [IP Filter Setting] from the menu to display the [GOT Ethernet Setting] window.

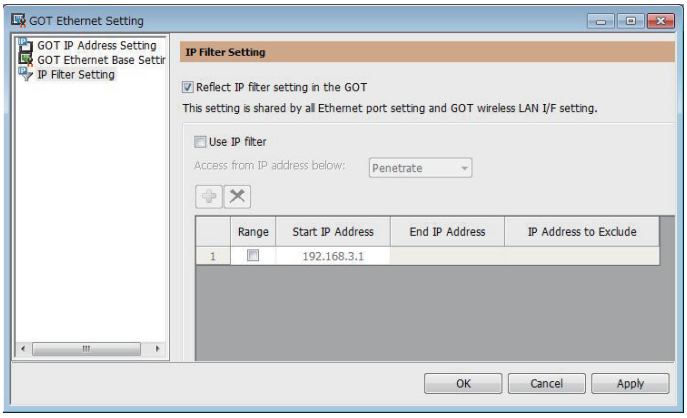

2. For the detailed settings, refer to the following manual.

GT Designer3 (GOT2000) Screen Design Manual

I/F communication setting

This function displays the list of the GOT communication interfaces.
Set the channel and the communication driver to the interface to be used.

Setting

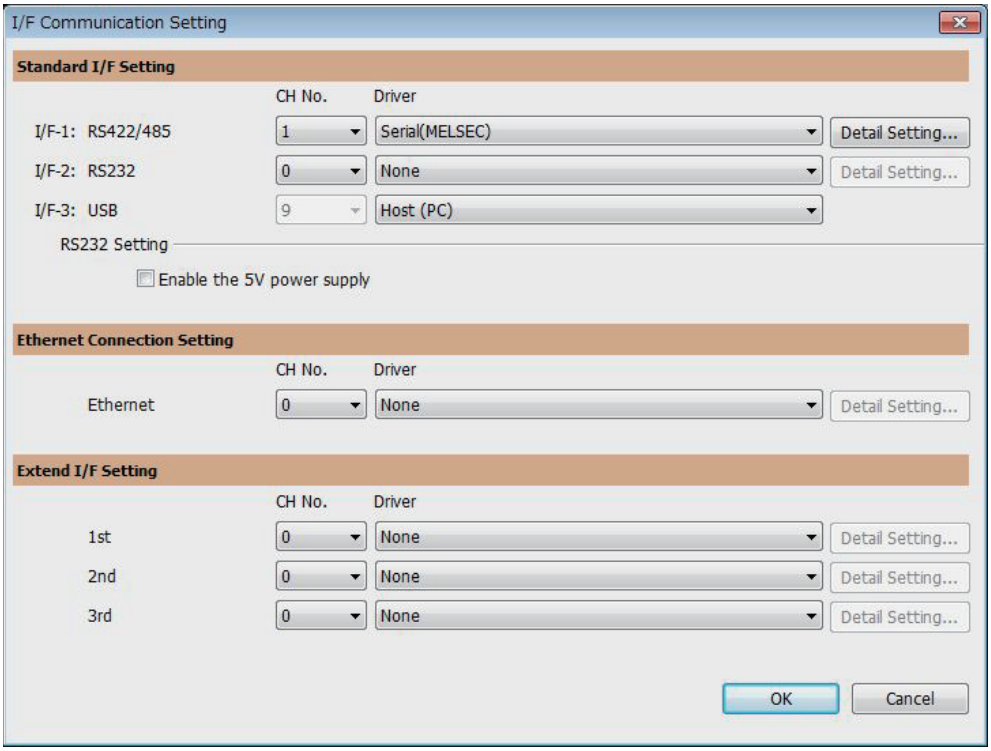

1. Select [Common] → [I/F Communication Setting] from the menu.
2. The I/F Communication Setting dialog box appears. Make the settings with reference to the following explanation.

Point

When using the parameter reflection function of MELSOFT Navigator.
When setting [Controller Setting] in GT Designer3 using the parameter function of MELSOFT Navigator, all of I/F Communication Setting are grayout and cannot be edited Set these items at [Controller Setting] or [Peripheral Unit Setting].

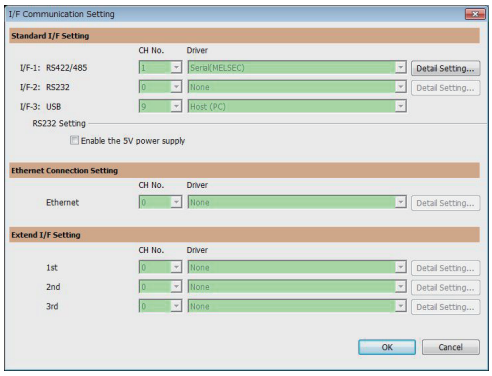

Setting item

The following describes the setting items for the standard I/F setting and extension I/F setting.

For the detailed explanations, refer to the following manual.

📖GT Designer3 (GOT2000) Screen Design Manual

When GT2104-P or GT2103-P is selected in the GOT type setting

I/F-1: RS422/485/232(Side)

I/F-2: RS232(Back)

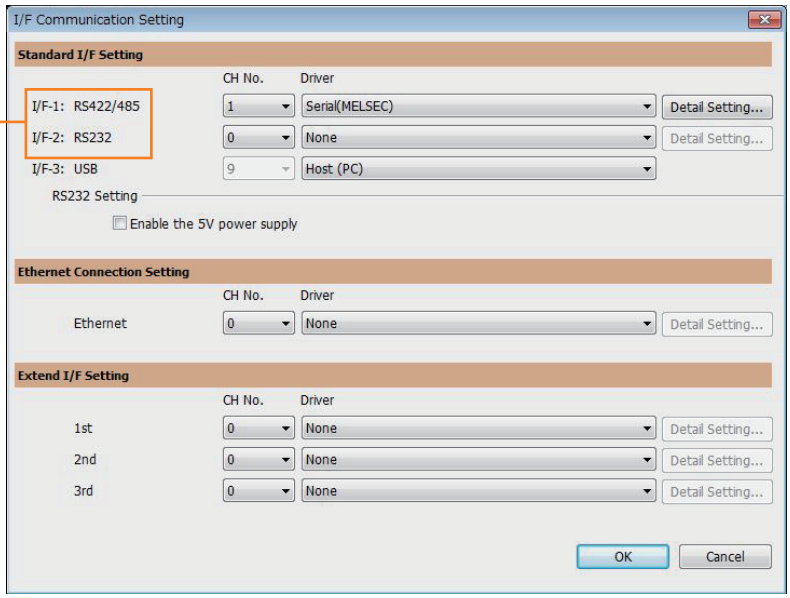

Item	Description	
Standard I/F Setting	Set channel No. and drivers to the GOT standard interfaces.	
	CH No.	Set the CH No. according to the intended purpose. 0: Not used 1 to 4: Used for connecting a controller of channel No. 1 to 4 set in Setting connected equipment (Channel setting) 5 to 8: Used for barcode function, RFID function, remote personal computer operation function (serial) A: Used for the report function (with a serial printer), hard copy function (with a serial printer).
	Driver	Set the driver for the device to be connected. • Each communication driver suitable to the channel numbers • Each communication driver for connected devices
	Detail Setting	Set the detailed settings for the communication driver. ☞ Refer to each chapter of the equipment to be connected to the GOT.
	I/F-1,I/F-2,I/F-3	The communication type of the GOT standard interface is displayed.
	RS232 Setting	To validate the 5V power supply function in RS232, mark the [Enable the 5V power supply] checkbox. The RS232 setting is invalid when the CH No. of [I/F-1: RS232] is [9]. Not applicable to GT21 and GS21.
Ethernet Connection Setting	Set the channel number and the communication driver to the Ethernet interface with a built-in GOT.	
	CH No.	Set the CH No. according to the intended purpose. 0: Not used 1 to 4: Used for connecting a controller of channel No. 1 to 4 set in Setting connected equipment (Channel setting) 9: Used for connecting Host (PC) or Ethernet download A: Used for the remote personal computer operation function (Ethernet), VNC server function, gateway function, and MES interface function. Multi: Used for multi-channel Ethernet connection
	Driver	Set the driver for the device to be connected. • Each communication driver suitable to the channel numbers • Each communication driver for connected devices
	Detail Setting	Set the detailed settings for the communication driver. ☞ Refer to each chapter of the equipment to be connected to the GOT.

Item	Description	
Extend I/F Setting	Set the communication unit attached to the extension interface of the GOT. Not applicable to GT21 and GS21.	
	CH No.	Set the CH No. according to the intended purpose. The number of channels differs depending on the GOT to be used. 0: Not used 1 to 4: Used for the controllers of channel numbers 1 to 4 set in controller setting (channel setting). 5 to 8: Used for the barcode function, the RFID function, and the remote personal computer operation function (Serial). A: Used for the video/RGB display function, multimedia function, external I/O function, operation panel function, video output function, report function, hard copy function (with a printer), and sound output function.
	Driver	Set the driver for the device to be connected. • Each communication driver suitable to the channel numbers • Each communication driver for connected devices
	Detail Setting	Set the detailed settings for the communication driver. ☞ Refer to each chapter of the equipment to be connected to the GOT.

Point

Channel No., drivers, [RS232 Setting]

• Channel No.2 to No.4

Use the channel No.2 to No.4 when using the Multi-channel function.

For details of the Multi-channel function, refer to the following.

☞ Page 1096 MULTI-CHANNEL FUNCTION

• Drivers

The displayed items for a driver differ according to the settings [Manufacturer], [Controller Type] and [I/F].

When the driver to be set is not displayed, confirm if [Manufacturer], [Controller Type] and [I/F] are correct.

☞ [Setting the communication interface] section in each chapter

Precautions

When using the multiple CPU system

When using the GOT to monitor the multiple CPU system of other stations, select [MELSEC-Q/QS, Q17nD/M/NC/DR/DSR, CRnD-700] for the type, regardless of the host PLC CPU type (QCPU, QnACPU, or ACPU).

When other models are selected, the setting of the CPU No. becomes unavailable.

Precautions for changing model

■When devices that cannot be converted are included.

When setting of [Manufacturer] or [Controller Type] is changed, GT Designer3 displays the device that cannot be converted (no corresponding device type, or excessive setting ranges) as [??]. In this case, set the device again.

■When the changed Manufacturer or Controller Type does not correspond to the network.

The network will be set to the host station.

■When the Manufacturer or Controller Type is changed to [None]

The GT Designer3 displays the device of the changed channel No. as [??]. In this case, set the device again.

Since the channel No. is retained, the objects can be reused in other channel No. in a batch by using the [Device Bach Edit], [CH No. Batch Edit] or [Device List].

1.2 Writing the Package Data onto the GOT

Write the package data onto the GOT.

For details on writing to GOT, refer to the following help.

GT Designer3 (GOT2000) Screen Design Manual

Writing the Package Data onto the GOT

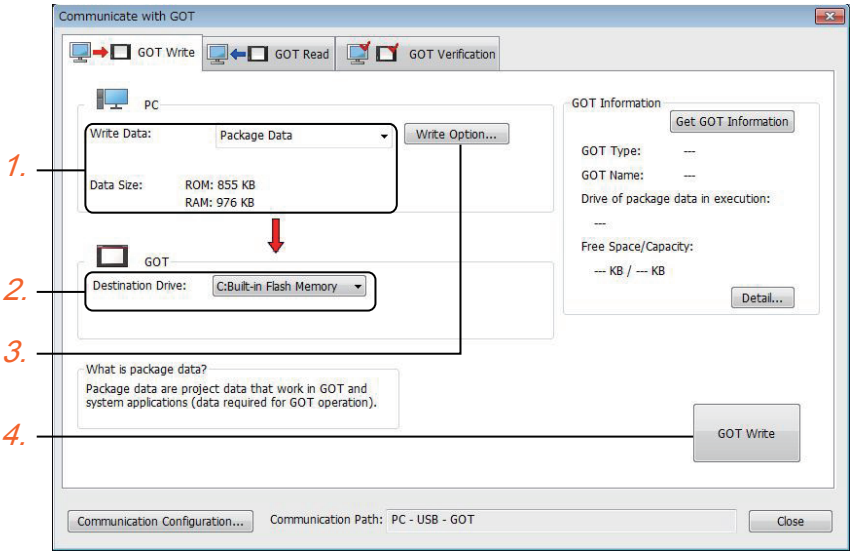

1. Select [Package Data] for [Write Data].

The capacity of the transfer data is displayed in [Data Size]. Check that the destination drive has the sufficient available space.

2. Select [Destination Drive].

3. When the system application or the special data is required to be added to the package data or deleted, click the [Write Option] button and configure the setting in the [Write Option] dialog.

4. Click the [GOT Write] button.

5. The package data is written to the GOT.

Checking the package data writing on GOT

Confirm if the package data is properly written onto the GOT by reading from GOT using GT Designer3.

For reading from the GOT, refer to the following help.

GT Designer3 (GOT2000) Screen Design Manual

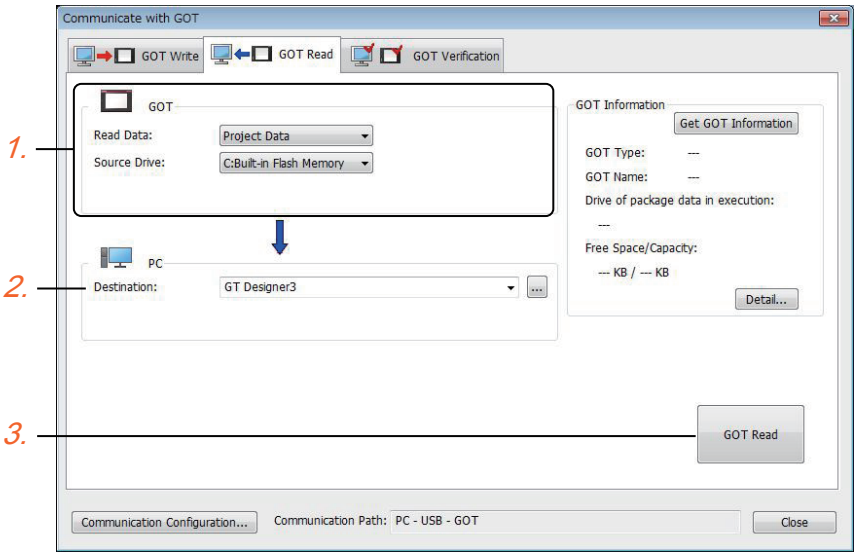

1. Set [GOT Side] as follows.

- Select [Project Data] or [Package Data] for [Read Data].
- Select the drive where the project data or the package data is stored for [Source Drive].

2. Set [PC Side].

Set the reading destination of the project for [Destination].

To read the project data to GT Designer3, select [GT Designer3].

(When [Read Data] is [Package Data], the project data cannot be read to GT Designer3.)

To read the project data as a file, click the [...] button to set the saving format and the saving destination of the file.

3. Click the [GOT Read] button.

4. The project is read.

5. Confirm that the project data is written correctly onto the GOT.

1.3 Option Devices for the Respective Connection

The following shows the option devices to connect in the respective connection type.
For the specifications, usage and connecting procedure on option devices, refer to the respective device manual.

Communication module

Product name	Model	Specifications
Bus connection unit	GT15-QBUS	For QCPU (Q mode), Motion CPU (Q series) Bus connection (1ch) unit standard model
	GT15-QBUS2	For QCPU (Q mode), Motion CPU (Q series) Bus connection (2ch) unit standard model
	GT15-ABUS	For A/QnACPU, Motion CPU (A series) Bus connection (1ch) unit standard model
	GT15-ABUS2	For A/QnACPU, Motion CPU (A series) Bus connection (2ch) unit standard model
	GT15-75QBUSL	For QCPU (Q mode), Motion CPU (Q series) Bus connection (1ch) unit slim model
	GT15-75QBUS2L	For QCPU (Q mode), Motion CPU (Q series) Bus connection (2ch) unit slim model
	GT15-75ABUSL	For A/QnACPU, Motion CPU (A series) Bus connection (1ch) unit slim model
	GT15-75ABUS2L	For A/QnACPU, Motion CPU (A series) Bus connection (1ch) unit slim model
Serial communication unit	GT15-RS2-9P	RS-232 serial communication unit (D-sub 9-pin (male))
	GT15-RS4-9S	RS-422/485 serial communication unit (D-sub 9-pin (female))
	GT15-RS4-TE	RS-422/485 serial communication unit (terminal block)
MELSECNET/H communication unit	GT15-J71LP23-25	Optical loop unit
	GT15-J71BR13	Coaxial bus unit
MELSECNET/10 communication unit	GT15-J71LP23-25	Optical loop unit (MELSECNET/H communication unit used in the MNET/10 mode)
	GT15-J71BR13	Coaxial bus unit (MELSECNET/H communication unit used in the MNET/10 mode)
CC-Link IE TSN communication unit	GT25-J71GN13-T2	Local station (device station)
CC-Link IE Controller Network communication unit	GT15-J71GP23-SX	Optical loop unit
CC-Link IE Field Network communication unit	GT15-J71GF13-T2	CC-Link IE Field Network (1000BASE-T) unit
CC-Link communication unit	GT15-J61BT13	Intelligent device station unit CC-LINK Ver. 2 compatible
Ethernet communication unit	GT25-J71E71-100	Ethernet (100Base-TX) unit
Wireless LAN communication unit*1*2	GT25-WLAN	Used for the connection to the IEEE802.11b/g/n compliant, built-in antenna, access point (master unit), station (slave unit), personal computers, tablets, and smartphones. For the hardware version and applicable wireless standards of the wireless LAN communication unit, refer to the following. ☞ Page 60 Hardware version and applicable wireless standards of the wireless LAN unit

*1 Data transfer in wireless LAN communication may not be as stable as that in cable communication.
A packet loss may occur depending on the surrounding environment and the installation location.
Be sure to perform a confirmation of operation before using this product.

*2 When [Operation Mode] is set to [Access Point] in [Wireless LAN Setting] of GT Designer3, up to five stations are connectable to the wireless LAN access point (base station).

Hardware version and applicable wireless standards of the wireless LAN unit

○: Compliant —: Not compliant

Hardware version	Compliance status						Country where the unit can be used
	Japanese Radio Act	FCC standards	RE Directive (R&TTE Directive)*1	SRRC	KC	Radio Equipment Regulations (UKCA)	
A Manufactured from Dec. 2013	○	—	—	—	—	—	Japan only
B Manufactured from Oct. 2014	○	○	○	—	—	—	Japan, the United States, the EU member states, Switzerland, Norway, Iceland, and Liechtenstein
C Manufactured from Feb. 2016	○	○	○	—	—	—	
D Manufactured from May 2016	○	○	○	○	○	—	Japan, the United States, the EU member states, Switzerland, Norway, Iceland, Liechtenstein, China (excluding Hong Kong, Macao, and Taiwan), and South Korea
E Manufactured from Oct. 2017	○	○	○	○	○	—	
F Manufactured from Jul. 2019	○	○	○	○	○	—	
G Manufactured from Oct. 2021	○	○	○	○	○	○	Japan, the United States, the EU member states, the UK, Switzerland, Norway, Iceland, Liechtenstein, China (excluding Hong Kong, Macao, and Taiwan), and South Korea
H Manufactured from Jan. 2023	○	○	○	○	○	○	
J Manufactured from Mar. 2023	○	○	○	○	○	○	
K or later Manufactured from Feb. 2024	○	○	○	—	○	○	Japan, the United States, the EU member states, the UK, Switzerland, Norway, Iceland, Liechtenstein, and South Korea

*1 The wireless LAN unit complies with the RE Directive from March 31, 2017.

Option unit

Product name	Model	Specifications
Multimedia unit	GT27-MMR-Z	For video input signal (NTSC/PAL) 1 ch, playing movie
Video input unit	GT27-V4-Z	For video input signal (NTSC/PAL) 4 ch
RGB input unit	GT27-R2 GT27-R2-Z	For analog RGB input signal 2 ch
Video/RGB input unit	GT27-V4R1-Z	For video input signal (NTSC/PAL) 4 ch, for analog RGB mixed input signal 1 ch
RGB output unit	GT27-ROUT GT27-ROUT-Z	For analog RGB output signal 1 ch
Digital video output unit	GT27-VHOUT	For digital video output, 1 channel
Sound output unit	GT15-SOUT	For sound output
External I/O unit	GT15-DIOR	For the connection to external I/O device or operation panel (Negative Common Input/Source Type Output)
	GT15-DIO	For the connection to external I/O device or operation panel (Positive Common Input/Sink Type Output)

Conversion cables

Product name	Model	Specifications
RS-485 terminal block conversion modules	FA-LTBGT2R4CBL05	RS-422/485 (Connector) ↔ RS-485 (Terminal block) Supplied connection cable dedicated for the conversion unit
	FA-LTBGT2R4CBL10	
	FA-LTBGT2R4CBL20	

Serial multi-drop connection unit

Product name	Model	Specifications
Serial multi-drop connection unit	GT01-RS4-M	GOT multi-drop connection module ☞ Page 1027 LASER DISPLACEMENT SENSOR MH11 CONNECTION

Field network adapter unit

Product name	Model	Specifications
Field network adapter unit	GT25-FNADP	The field network adapter unit can be used with the following field networks by using the Anybus CompactCom M40 network communication module manufactured by HMS (hereinafter referred to as the communication module). Field networks: PROFIBUS DP-V1 DeviceNet How to incorporate the communication module to the field network adapter unit, and the details of the product name of the communication module, refer to the following manual. 📖GOT2000 Series Field Network Adapter Unit User's Manual

RS-232/485 signal conversion adapter

Product name	Model	Specifications
RS-232/485 signal conversion adapter	GT14-RS2T4-9P	RS-232 signal (D-Sub 9-pin connector) → RS-485 signal (Terminal block)

Precautions when installing units on top of one another

When units are installed on top of one another, the installation positions are determined by the combination of units.

Point

- How to install a communication unit and option unit

For how to install a communication unit and option unit, refer to the following.

GOT2000 Series User's Manual (Hardware)

- When the multi-channel function is used

When the multi-channel function is used, the connection type combinations are determined.

For the connection type combinations, refer to the following.

☞ Page 1104 Determining the connection type and channel No. (System selection)

Product		Model	Number of occupied slots	Installation position
Group A *1	Video input unit	GT27-V4-Z *2	2	1st stage
	RGB input unit	GT27-R2		
		GT27-R2-Z *2		
	Video/RGB input unit	GT27-V4R1-Z *2		
	RGB output unit	GT27-ROUT		
		GT27-ROUT-Z *2		
	Multimedia unit	GT27-MMR-Z *2		
	Digital video output unit	GT27-VHOUT		
Group B *1	Bus connection unit (2 channels) *3	GT15-QBUS2	2	• When a group A unit is installed: Upper stage of the unit • When no group A unit is installed: 1st stage • When a group C unit is installed: Lower stage of the unit
		GT15-ABUS2		
	MELSECNET/H communication unit	GT15-J71LP23-25		
		GT15-J71BR13		
	CC-Link IE TSN communication unit	GT25-J71GN13-T2		
	CC-Link IE Controller Network communication unit	GT15-J71GP23-SX		
	CC-Link IE Field Network communication unit	GT15-J71GF13-T2		
	CC-Link communication unit	GT15-J61BT13		
Group C	Bus connection unit (1 channel) *3*4	GT15-QBUS	1	• When a group A unit is installed: Upper stage of the unit • When a group B unit is installed: Upper stage of the unit
		GT15-ABUS		
	Ethernet communication unit	GT25-J71E71-100		
	Serial communication unit	GT15-RS2-9P		
		GT15-RS4-9S		
		GT15-RS4-TE		
	Sound output unit	GT15-SOUT		
	External I/O unit	GT15-DIOR		
		GT15-DIO		
	Printer unit	GT15-PRN		
Field network adapter unit		GT25-FNADP	1	Uppermost stage

*1 Only one of the units can be installed on the GOT.

*2 The unit requires two stages.

*3 A slim model bus connection unit (GT15-75QBUSL, GT15-75QBUS2L, GT15-75ABUSL, or GT15-75ABUS2L) cannot be installed on another unit.

*4 The unit cannot be installed on a group B unit.

Example) When installing a video/RGB input unit, MELSECNET/H communication unit, and serial communication unit

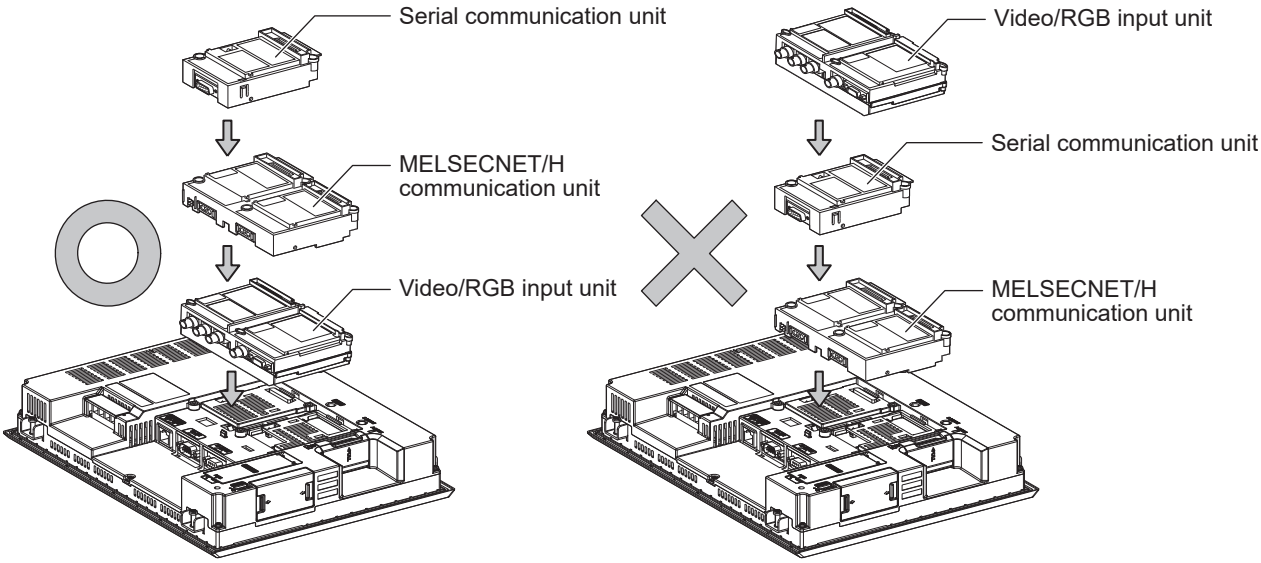

1.4 Connection Cables for the Respective Connection

To connect the GOT to a device in the respective connection type, connection cables between the GOT and a device are necessary.

For cables needed for each connection, refer to each chapter for connection.

For the dimensions of connection cables and connector shapes, refer to the following.

📖GOT2000 Series User's Manual (Hardware)

GOT connector specifications

The following shows the connector specifications on the GOT side.

Refer to the following table when preparing connection cables by the user.

RS-232 interface

The following connector or equivalent connector is used for the RS-232 interface of the GOT and the RS-232 communication unit.

For the GOT side of the connection cable, use a connector and connector cover applicable to the GOT connector.

■Connector specifications

GOT	Connector type	Connector model	Manufacturer
GT27, GT25, GT23, GT2107-W, GT2105-QTBDS, GT2105-QMBDS, GS25, GS21	9-pin D-sub (male) #4-40UNC inch screw thread	17LE-23090-27(D3CH)-FA	DDK Ltd.
GT15-RS2-9P	9-pin D-sub (male) #4-40UNC inch screw thread	17LE-23090-27(D3CH)-FA	DDK Ltd.
GT01-RS4-M		JES-9P-2A3A	J.S.T.MFG.CO.,LTD. (JST)
GT2104-RTBD GT2104-PMBDS2 GT2103-PMBDS2	9-pin terminal block *1*2	MC1.5/9-G-3.5BK	PHOENIX CONTACT Inc

*1 The terminal block (MC1.5/9-ST-3.5 or corresponding product) of the cable side is packed together with the GT2104-RTBD, GT2103-PMBDS2.

*2 The applicable solderless terminal of the terminal block is AI 0.25-6BU (AWG24) (PHOENIX CONTACT Inc.).
When fabricating a connection cable, use CRIMPFOX 6 (PHOENIX CONTACT Inc.) for crimping tool.

■Connector pin arrangement

GT27, GT25, GT23, GT2107-W, GT2105-QTBDS, GT2105-QMBDS, GS25, GS21, GT15-RS2-9P, GT01-RS4-M	GT2104-RTBD, GT2104-PMBDS2, GT2103-PMBDS2
GOT main part connector see from the front 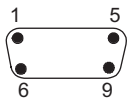 9-pin D-sub (male)	See from the back of a GOT main part 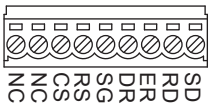 9-pin terminal block

RS-422/485 interface

The following connector or equivalent connector is used for the RS-422/485 interface of the GOT and the RS-422/485 communication unit.

For the GOT side of the connection cable, use a connector and connector cover applicable to the GOT connector.

■Connector model

GOT	Connector type	Connector model	Manufacturer
GT27, GT25, GT23, GT2107-W, GT2105-QTBDS, GT2105-QMBDS, GS25, GS21	9-pin D-Sub (female) M2.6 metric screw thread	17LE-13090-27(D3AH)-FA	DDK Ltd.
GT2104-PMBD GT2103-PMBD	5-pin terminal block *1*3	MC1.5/5-G-3.5BK	PHOENIX CONTACT Inc.
GT2104-RTBD GT2104-PMBDS GT2103-PMBDS GT2103-PMBLS	9-pin terminal block *2*3	MC1.5/9-G-3.5BK	PHOENIX CONTACT Inc.
GT15-RS4-9S	9-pin D-Sub (female) M2.6 metric screw thread	17LE-13090-27(D3AH)-FA	DDK Ltd.
GT01-RS4-M		JES-9S-2A3B14	J.S.T.MFG.CO.,LTD. (JST)
GT15-RS4-TE	-	SL-SMT3.5/10/90F BOX	Weidmüller Interface GmbH & Co. KG

*1 The terminal block (MC1.5/5-ST-3.5 or corresponding product) of the cable side is packed together with the GT2103-PMBD.

*2 The terminal block (MC1.5/9-ST-3.5 or corresponding product) of the cable side is packed together with the GT2104-RTBD, GT2103-PMBDS, GT2103-PMBLS.

*3 The applicable solderless terminal of the terminal block is AI 0.25-6BU (AWG24) (PHOENIX CONTACT Inc.).
When fabricating a connection cable, use CRIMPFOX 6 (PHOENIX CONTACT Inc.) for crimping tool.

■Connector pin arrangement

GT27, GT25, GT23, GT2107-W, GT2105-QTBDS, GT2105-QMBDS, GS25, GS21, GT15-RS2-9P, GT01-RS4-M	GT2104-PMBD, GT2103-PMBD	GT2104-RTBD, GT2104-PMBDS, GT2103-PMBDS, GT2103-PMBLS
GOT main part connector see from the front 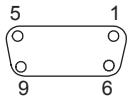 9-pin D-sub (female)	GOT main unit see from the back 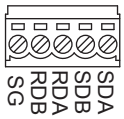 5-pin terminal block	GOT main unit see from the back 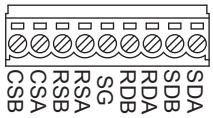 9-pin terminal block

Coaxial cable connector connection method

The following describes the method for connecting the BNC connector (connector plug for coaxial cable) and the cable.

⚠CAUTION

- Solder the coaxial cable connectors properly.
  Insufficient soldering may result in malfunctions.

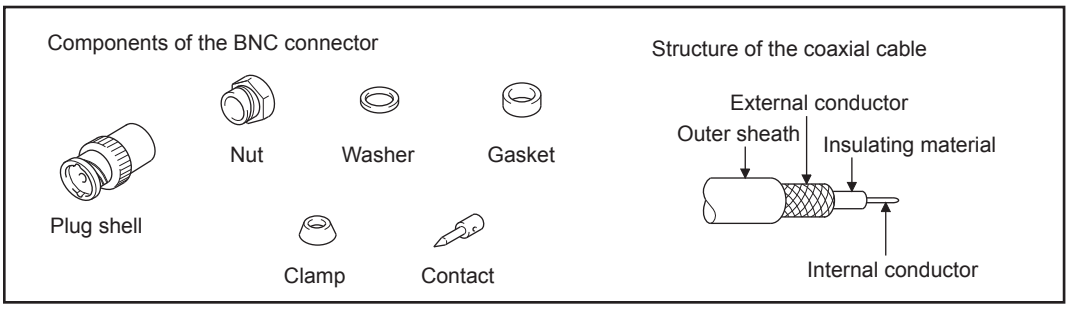

1. Remove the external sheath of the coaxial cable with dimensions as shown below.

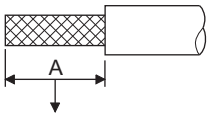

Cut this portion of the outer sheath

Cable in use	A
3C-2V	15 mm
5C-2V, 5C-2V-CCY	10 mm

2. Pass the nut, washer, gasket, and clamp through the coaxial cable as shown on the left and loosen the external conductor.

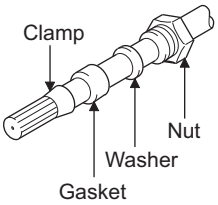

3. Cut the external conductor, insulting material, and internal conductor with the dimensions as shown below.

Note that the external conductor should be cut to the same dimension as the tapered section of the clamp and smoothed down to the clamp.

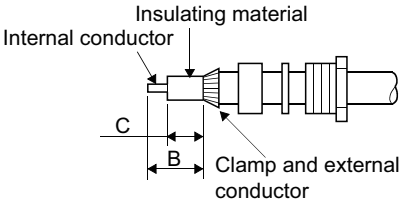

Cable in use	B	C
3C-2V	6 mm	3 mm
5C-2V, 5C-2V-CCY	7 mm	5 mm

4. Solder the contact to the internal conductor.

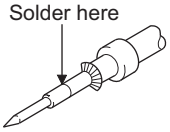

5. Insert the contact assembly shown in step 4 into the plug shell and screw the nut into the plug shell.

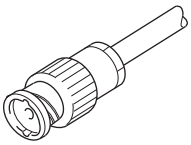

Precautions for soldering

Note the following precautions when soldering the internal conductor and contact.

- Make sure that the solder does not bead up at the soldered section.
- Make sure there are no gaps between the connector and cable insulator or they do not cut into each other.
- Perform soldering quickly so the insulation material does not become deformed.

Terminating resistors of GOT

The following shows the terminating resistor specifications on the GOT side.
When setting the terminating resistor in each connection type, refer to the following.

RS-422/485 communication unit

Set the terminating resistor using the terminating resistor setting switch.

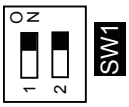

Terminating resistor*1	Switch No.	
	1	2
100 OHM	ON	ON
Disable	OFF	OFF

*1 The default setting is "Disable".

- For RS422/485 communication unit

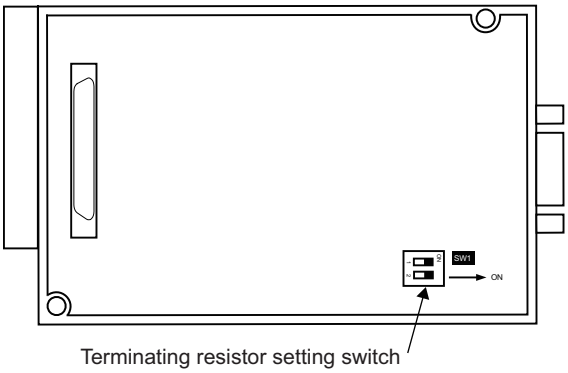

Rear view of RS-422/485 communication unit.

GT27

Set the terminating resistor using the terminating resistor setting switch.

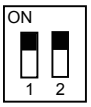

Terminating resistor*1	Switch No.	
	1	2
Enable	ON	ON
Disable	OFF	OFF

*1 The default setting is "Disable".

- For GT2710-V

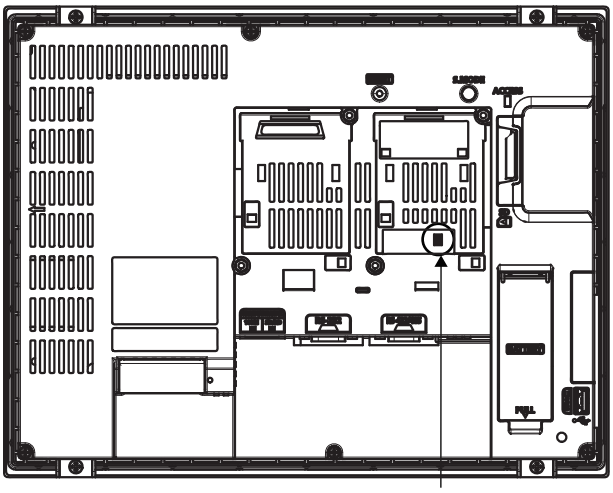

Terminating resistor setting switch
(inside the cover)

GT25 (except GT25-W and GT2505-V)

Set the terminating resistor using the terminating resistor setting switch.

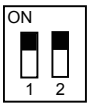

Terminating resistor*1	Switch No.	
	1	2
Enable	ON	ON
Disable	OFF	OFF

*1 The default setting is "Disable".

- For GT2510-V

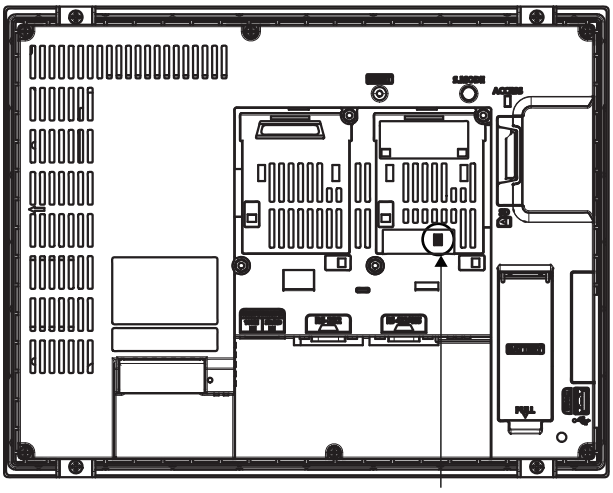

Terminating resistor setting switch
(inside the cover)

GT25-W

Set the terminating resistor using the terminating resistor selector.

- For GT2510-WX

Terminating resistor selector switch
(inside the cover)

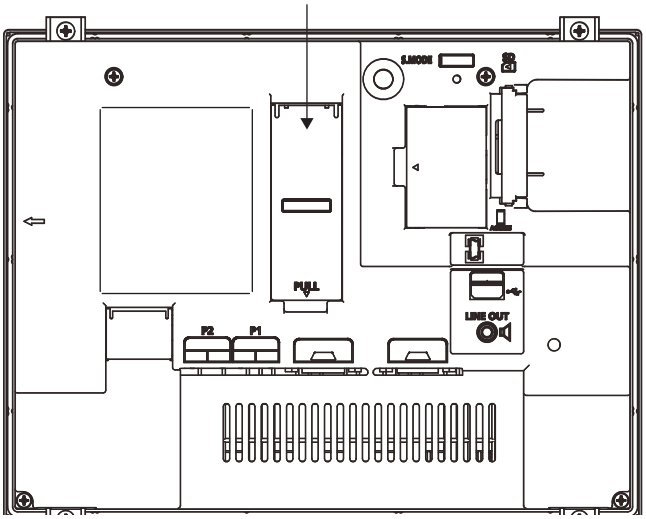

GT2505-V

Set the terminating resistor using the terminating resistor selector.

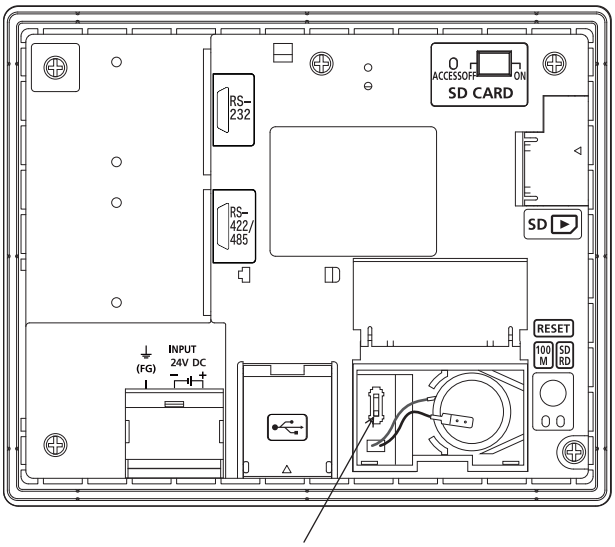

GT23

Set the terminating resistor using the terminating resistor setting switch.

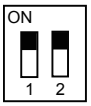

Terminating resistor*1	Switch No.	
	1	2
Enable	ON	ON
Disable	OFF	OFF

*1 The default setting is "Disable".

- For GT2310-V

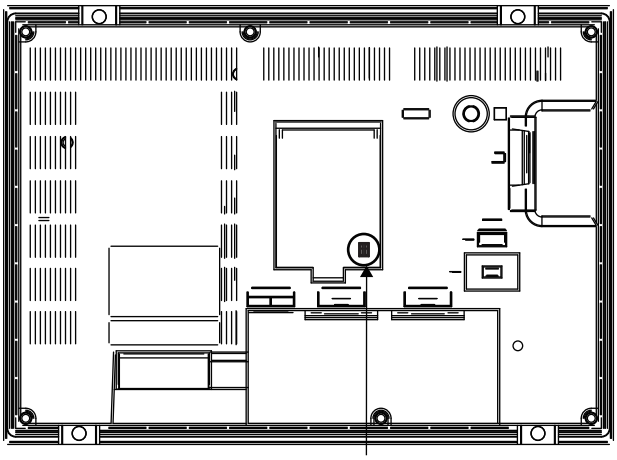

GT21

Set the terminating resistor using the terminating resistor selector.

- For GT2103-PMBD

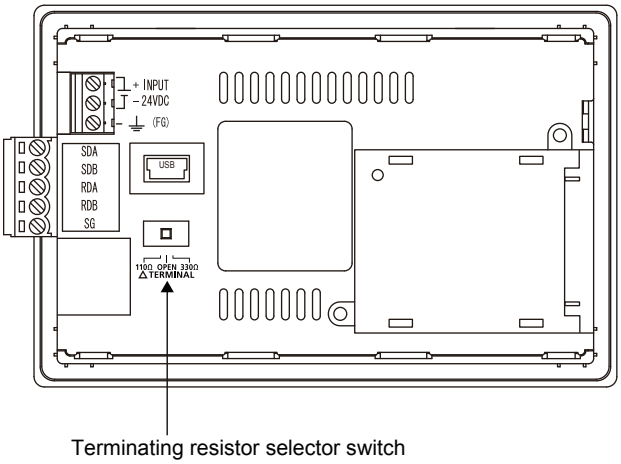

GS25

Set the terminating resistor using the terminating resistor selector.

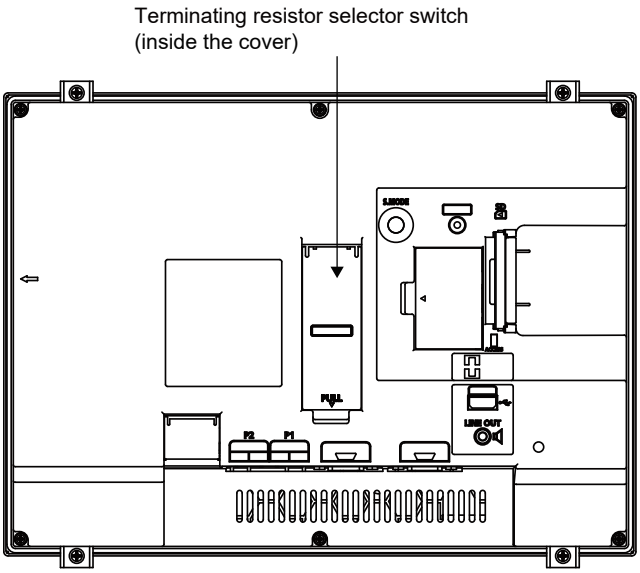

GS21-W-N

Set the terminating resistor using the terminating resistor selector.

- For GS2110-WTBD-N

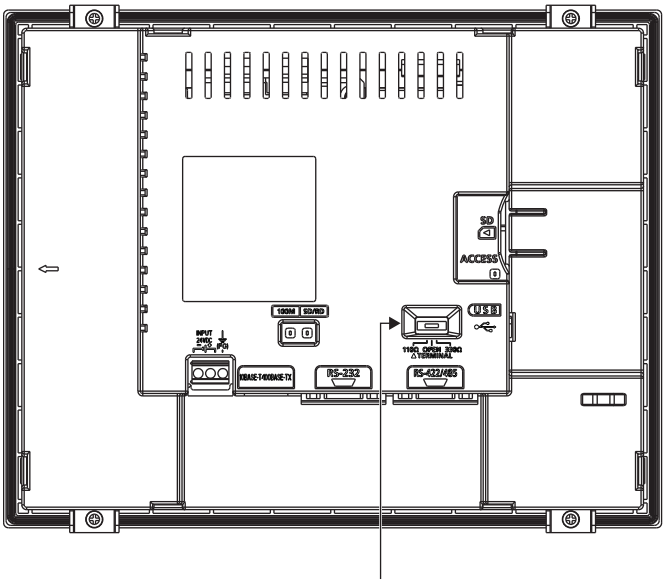

Point

- Position of the terminating resistor selector switch

The position of the terminating resistor selector switch depends on the GOT type.

For the details, refer to the following.

GOT2000 Series User's Manual (Hardware)

- Terminating resistor of GS21-W

The terminating resistor of GS21-W is fixed to 330 Ω.

For the details, refer to the following.

GOT SIMPLE Series User's Manual

Setting the RS-232/485 signal conversion adaptor

Set the 2-wire/4-wire terminating resistor setting switch according to the connection type.

Point

Enable the 5V power supply

Make sure to validate "Enable the 5V power supply" in the [RS232 Setting] to operate the RS-232/485 signal conversion adaptor.

☞ Page 54 I/F communication setting

When validating the function using the utility function of the GOT main unit, refer to the following manual.

📖GOT2000 Series User's Manual (Utility)

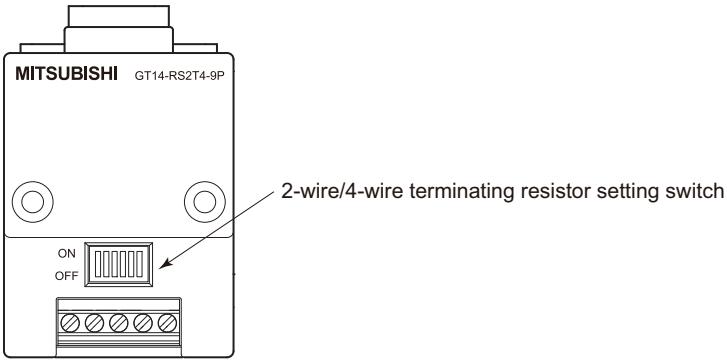

Setting the 2-wire/4-wire terminating resistor setting switch

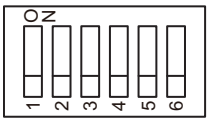

Setting item	Set value	Switch No.					
		1	2	3	4	5	6
2-wire/4-wire	2-wire (1Pair)	ON	ON	-	-	-	OFF
	4-wire (2Pair)	OFF	OFF	-	-	-	OFF
Terminating resistor	110Ω	-	-	ON	OFF	OFF	OFF
	OPEN	-	-	OFF	OFF	OFF	OFF
	330Ω	-	-	OFF	ON	ON	OFF

Point

RS-232/485 signal conversion adapter

For details on the RS-232/485 signal conversion adapter, refer to the following manual.

📖GT14-RS2T4-9P RS-232/485 Signal Conversion Adapter User's Manual

1.5 Verifying GOT Recognizes Connected Equipment

Verify the GOT recognizes controllers on [Communication Settings] of the Utility.

- Channel number of communication interface, communication drivers allocation status
- Communication unit installation status

For details on the Utility, refer to the following manual.

GOT2000 Series User's Manual (Utility)

1. After powering up the GOT, touch [GOT basic set] → [Controller] from the Utility.

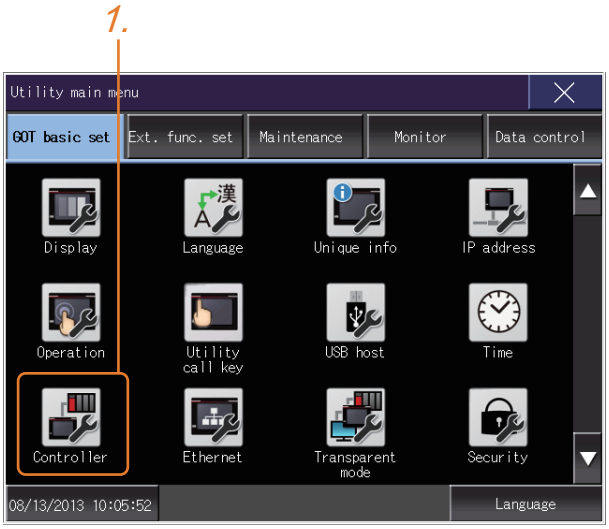

2. The [Communication Settings] appears.

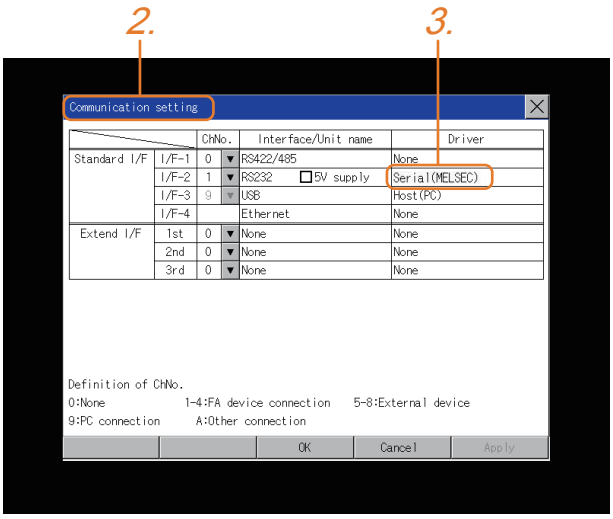

3. Verify that the communication driver name to be used is displayed in the communication interface box to be used.

4. When the communication driver name is not displayed normally, carry out the following procedure again.

Page 35 Setting the Communication Interface

Point

Utility

• How to display Utility (at default)

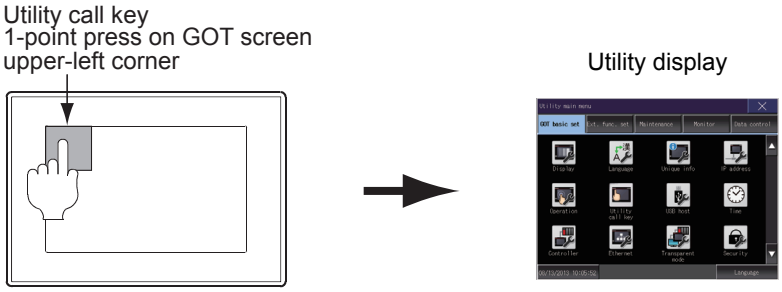

• Utility call

When setting [Pressing time] to other than 0 second on the setting screen of the utility call key, press and hold the utility call key until the buzzer sounds. For the setting of the utility call key, refer to the following.

GOT2000 Series User's Manual (Utility)

• Communication interface setting by the Utility

The communication interface setting can be changed on the Utility's [Communication setting] after writing [Controller Setting] of project data.

For details on the Utility, refer to the following manual.

GOT2000 Series User's Manual (Utility)

• Precedence in communication settings

When settings are made by GT Designer3 or the Utility, the latest setting is effective.

1.6 Checking for Normal Monitoring

Check on the GOT

Check for errors occurring on the GOT

Presetting the system alarm to project data allows you to identify errors occurred on the GOT, PLC CPU, servo amplifier and communications.

For details on the operation method of the GOT Utility screen, refer to the following manual.

GOT2000 Series User's Manual (Utility)

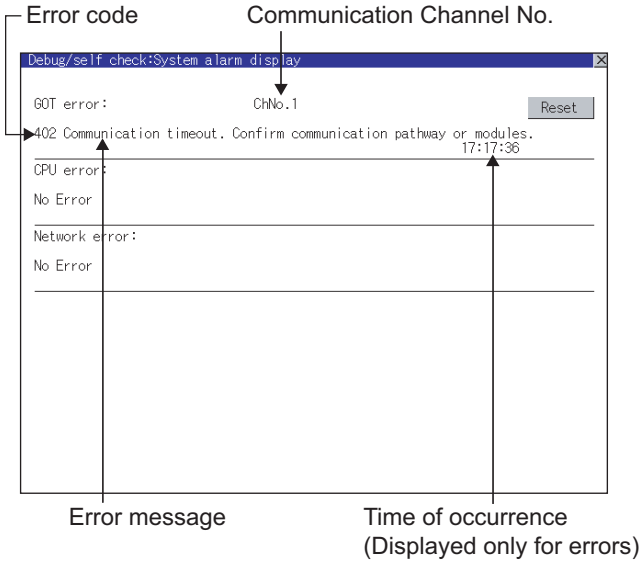

Point

Alarm popup display

With the alarm popup display function, alarms are displayed as a popup display regardless of whether an alarm display object is placed on the screen or not (regardless of the display screen).

Since comments can be flown from right to left, even a long comment can be displayed all.

For details of the alarm popup display, refer to the following manual.

GT Designer3 (GOT2000) Screen Design Manual

Perform an I/O check

Whether the PLC can communicate with the GOT or not can be checked by the I/O check function.

If this check ends successfully, it means correct communication interface settings and proper cable connection.

Display the I/O check screen by Main Menu.

- Display the I/O check screen by [Maintenance] → [I/O check].

For details on the I/O check, refer to the following manual:

📖GOT2000 Series User's Manual (Utility)

1. Touch [CPU] on the I/O check screen.

Touching [CPU] executes the communication check with the connected PLC.

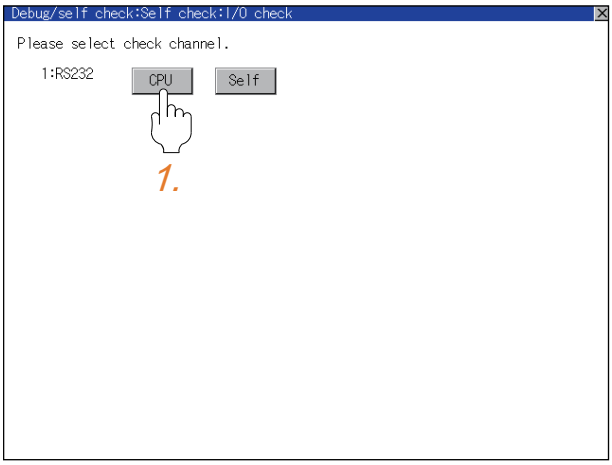

2. When the communication screen ends successfully, the screen on the left is displayed.

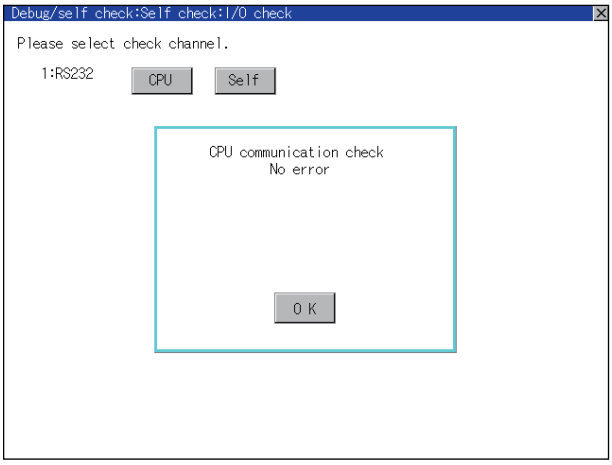

Communication monitoring function

The communication monitoring is a function that checks whether the PLC can communicate with the GOT.
If this check ends successfully, it means correct communication interface settings and proper cable connection.
Display the communication monitoring function screen by [Main Menu] → [Comm. Setting] → [Comm. Monitor].
For details on the communication monitoring function, refer to the following manual:
📖GOT2000 Series User's Manual (Utility)
(Operation of communication monitoring function screen)

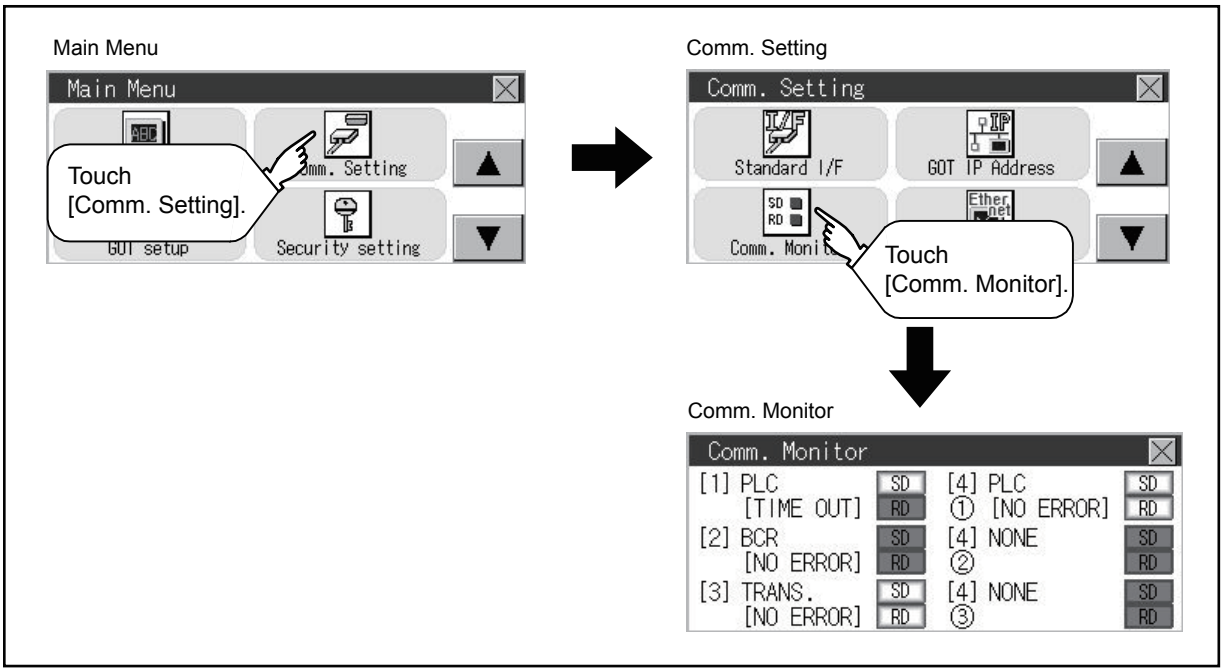

Confirming the communication status with network unit by GOT

When the GOT with any of the following units mounted is connected, the communication status of the communication unit can be checked on the GOT.

Communication unit		Connection type
MELSECNET/H communication unit	GT15-J71LP23-25 GT15-J71BR13	MELSECNET/H, MELSECNET/10 connection
CC-Link IE TSN communication unit	GT25-J71GN13-T2	CC-Link IE TSN connection
CC-Link IE Controller Network communication unit	GT15-J71GP23-SX	CC-Link IE Controller Network connection
CC-Link IE Field Network communication unit	GT15-J71GF13-T2	CC-Link IE Field Network connection
CC-Link communication unit	GT15-J61BT13	CC-Link connection (Intelligent device station)

The communication status of the communication unit can be checked in the [Network Status Display] in utility of the GOT.
For details on the operation method of the GOT Utility screen, refer to the following manual.
📖GOT2000 Series User's Manual (Utility)
For details on the [Network Status Display], refer to the following manual.
📖GOT2000 Series User's Manual (Monitor)

Confirming the communication state on the GOT side (For Ethernet connection)

Confirming the communication state on Windows, GT Designer3

■When using the Windows Command Prompt

Execute a Ping command at the Command Prompt of Windows.

- At normal communication

C:\>Ping 192.168.3.18

Reply from 192.168.3.18: bytes=32 time<1ms TTL=64

- At abnormal communication

C:\>Ping 192.168.3.18

Request timed out.

■When using the [Test] of GT Designer3

Select [Communication] → [Communication settings] from the menu to display [TEST].

1. Set the [PC side I/F] to the [Ethernet].

2. Specify the [GOT IP Address] of the [Communication Configuration] and click the [Test] button.

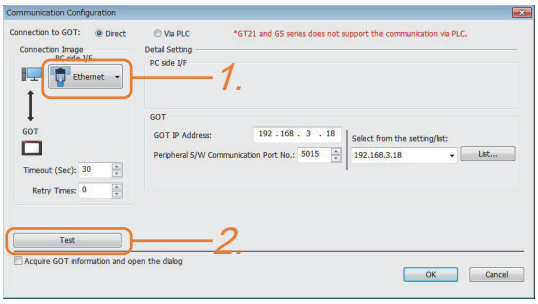

3. Check if GT Designer3 has been connected to the GOT.

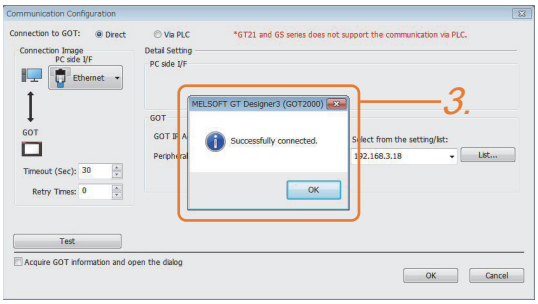

■At abnormal communication

At abnormal communication, check the followings and execute the Ping command or [Test] again.

- Mounting condition of Ethernet communication unit
- Cable connecting condition
- Confirmation of [Communication Settings]
- IP address of GOT specified by Ping command

Confirming the communication state on the GOT

[PING Test] can be confirmed by the Utility screen of the GOT.

For details on the operation method of the GOT Utility screen, refer to the following manual.

GOT2000 Series User's Manual (Utility)

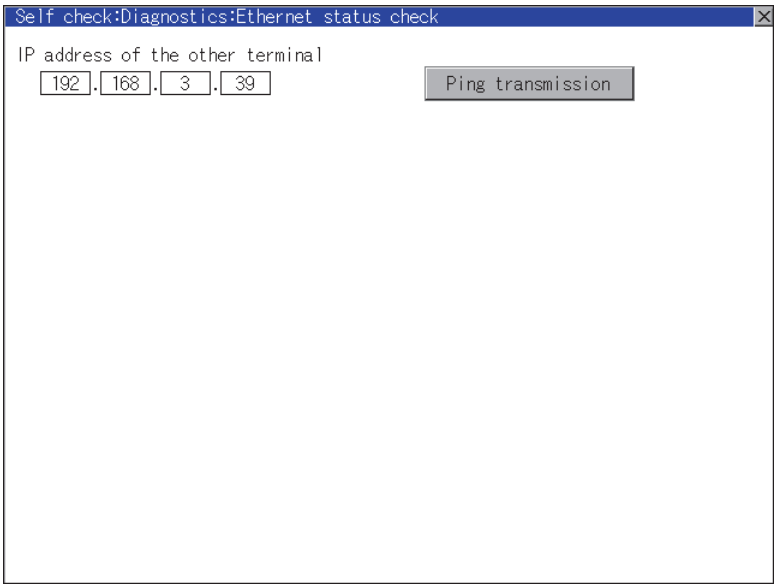

Confirming the communication state to each station (Station monitoring function)

The station monitoring function detects the faults (communication timeout) of the stations monitored by the GOT. When detecting the abnormal state, it allocates the data for the faulty station to the GOT special register (GS).

No. of faulty stations

■Ethernet connection (Except for Ethernet multiple connection)

Total No. of the faulty CPU is stored.

Device	b15 to b8	b7 to b0
GS230	(00H fixed)	No. of faulty stations

■Ethernet multiple connection

Total No. of the faulty connected equipment is stored.

Channel	Device	b15 to b8	b7 to b0
Ch1	GS280	(00H fixed)	No. of faulty stations
Ch2	GS300	(00H fixed)	No. of faulty stations
Ch3	GS320	(00H fixed)	No. of faulty stations
Ch4	GS340	(00H fixed)	No. of faulty stations

Point

When monitoring GS230 on Numerical Display

When monitoring GS230 on Numerical Display, check [mask processing] with data operation tab as the following.

For the data operation, refer to the following manual.

📖GT Designer3 (GOT2000) Screen Design Manual

• Numerical Display (Data Operation tab)

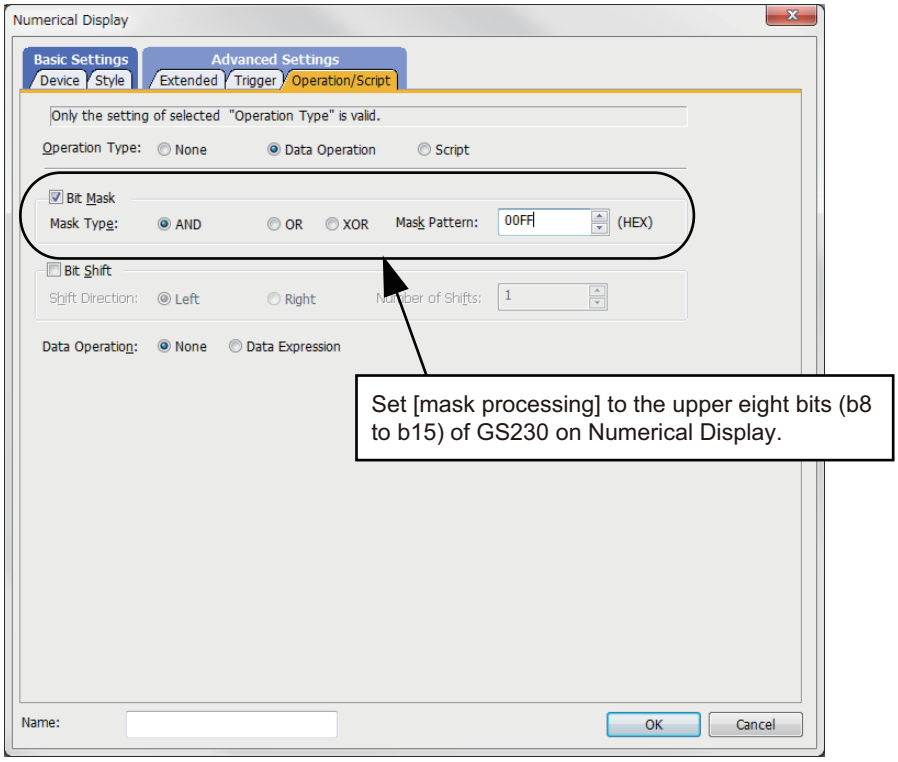

Faulty station information

The bit corresponding to the faulty station is set. (0: Normal, 1: Abnormal)

The bit is reset after the fault is recovered.

■Ethernet connection

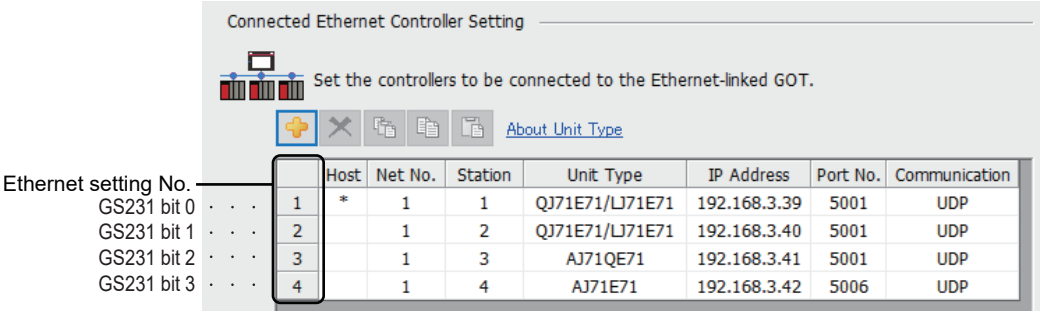

Device	Ethernet setting No.															
	b15	b14	b13	b12	b11	b10	b9	b8	b7	b6	b5	b4	b3	b2	b1	b0
GS231	16	15	14	13	12	11	10	9	8	7	6	5	4	3	2	1
GS232	32	31	30	29	28	27	26	25	24	23	22	21	20	19	18	17
GS233	48	47	46	45	44	43	42	41	40	39	38	37	36	35	34	33
GS234	64	63	62	61	60	59	58	57	56	55	54	53	52	51	50	49
GS235	80	79	78	77	76	75	74	73	72	71	70	69	68	67	66	65
GS236	96	95	94	93	92	91	90	89	88	87	86	85	84	83	82	81
GS237	112	111	110	109	108	107	106	105	104	103	102	101	100	99	98	97
GS238	128	127	126	125	124	123	122	121	120	119	118	117	116	115	114	113

The following shows the Ethernet setting numbers corresponding to each devices in the multi-channel Ethernet connection.

Device				Ethernet setting No.															
Ch1	Ch2	Ch3	Ch4	b15	b14	b13	b12	b11	b10	b9	b8	b7	b6	b5	b4	b3	b2	b1	b0
GS281	GS301	GS321	GS341	16	15	14	13	12	11	10	9	8	7	6	5	4	3	2	1
GS282	GS302	GS322	GS342	32	31	30	29	28	27	26	25	24	23	22	21	20	19	18	17
GS283	GS303	GS323	GS343	48	47	46	45	44	43	42	41	40	39	38	37	36	35	34	33
GS284	GS304	GS324	GS344	64	63	62	61	60	59	58	57	56	55	54	53	52	51	50	49
GS285	GS305	GS325	GS345	80	79	78	77	76	75	74	73	72	71	70	69	68	67	66	65
GS286	GS306	GS326	GS346	96	95	94	93	92	91	90	89	88	87	86	85	84	83	82	81
GS287	GS307	GS327	GS347	112	111	110	109	108	107	106	105	104	103	102	101	100	99	98	97
GS288	GS308	GS328	GS348	128	127	126	125	124	123	122	121	120	119	118	117	116	115	114	113

■CC-Link IE TSN connection

Device	Station number															
	b15	b14	b13	b12	b11	b10	b9	b8	b7	b6	b5	b4	b3	b2	b1	b0
GS1281	15	14	13	12	11	10	9	8	7	6	5	4	3	2	1	0
GS1282	31	30	29	28	27	26	25	24	23	22	21	20	19	18	17	16
GS1283	47	46	45	44	43	42	41	40	39	38	37	36	35	34	33	32
GS1284	63	62	61	60	59	58	57	56	55	54	53	52	51	50	49	48
GS1285	79	78	77	76	75	74	73	72	71	70	69	68	67	66	65	64
GS1286	95	94	93	92	91	90	89	88	87	86	85	84	83	82	81	80
GS1287	111	110	109	108	107	106	105	104	103	102	101	100	99	98	97	96
GS1288	-	-	-	-	-	-	-	120	119	118	117	116	115	114	113	112

■Temperature controller (AZBIL temperature controller (DMC50)) connection

Device				Station number-Sub Station															
Ch1	Ch2	Ch3	Ch4	b15	b14	b13	b12	b11	b10	b9	b8	b7	b6	b5	b4	b3	b2	b1	b0
GS281	GS301	GS321	GS341	1-15	1-14	1-13	1-12	1-11	1-10	1-9	1-8	1-7	1-6	1-5	1-4	1-3	1-2	1-1	1-0
GS282	GS302	GS322	GS342	2-15	2-14	2-13	2-12	2-11	2-10	2-9	2-8	2-7	2-6	2-5	2-4	2-3	2-2	2-1	2-0
GS283	GS303	GS323	GS343	3-15	3-14	3-13	3-12	3-11	3-10	3-9	3-8	3-7	3-6	3-5	3-4	3-3	3-2	3-1	3-0
GS284	GS304	GS324	GS344	4-15	4-14	4-13	4-12	4-11	4-10	4-9	4-8	4-7	4-6	4-5	4-4	4-3	4-2	4-1	4-0
GS285	GS305	GS325	GS345	5-15	5-14	5-13	5-12	5-11	5-10	5-9	5-8	5-7	5-6	5-5	5-4	5-3	5-2	5-1	5-0
GS286	GS306	GS326	GS346	6-15	6-14	6-13	6-12	6-11	6-10	6-9	6-8	6-7	6-6	6-5	6-4	6-3	6-2	6-1	6-0
GS287	GS307	GS327	GS347	7-15	7-14	7-13	7-12	7-11	7-10	7-9	7-8	7-7	7-6	7-5	7-4	7-3	7-2	7-1	7-0
GS288	GS308	GS328	GS348	8-15	8-14	8-13	8-12	8-11	8-10	8-9	8-8	8-7	8-6	8-5	8-4	8-3	8-2	8-1	8-0

■Other connection types

The corresponding devices differ depending on the communication driver to be used.

- Communication drivers that monitor the host station only

Communication driver list		
Bus Q	Bus A/QnA	Serial(MELSEC)
AJ71QC24, MELDAS C6*	AJ71C24/UC24	CC-Link(G4)
MELSEC-FX	MELSEC-WS	OMRON SYSMAC
YASKAWA GL	YASKAWA CP9200 (H)	YASKAWA CP9300MS (MC compatible)
YASKAWA MP2000/MP900/CP9200SH	AB Control/CompactLogix	SHARP JW
TOSHIBA PROSEC T/V	HITACHI IES HIDIC H	HITACHI IES HIDIC H(Protocol2)
PANASONIC MEWNET-FP	PANASONIC MEWTOCOL-7	SIEMENS S7-200
YOKOGAWA FA500/FA-M3/STARDOM	Serial(KEYENCE)	HITACHI S10mini/S10V
FUJI MICREX-SX SPH	SHIBAURA MACHINE TCmini	SICK Flexi Soft
IAI X-SEL	PROFIBUS DP	DeviceNet

The host station uses bit 0.

Ch1: GS281.b0

Ch2: GS301.b0

Ch3: GS321.b0

Ch4: GS341.b0

• Communication drivers that monitor other stations as well as the host station

Communication driver list		
CC-Link IE Controller Network	CC-Link IE Field Network	MEI Nexgenie
AB SLC500 AB 1:N connection	AB MicroLogix	AB MicroLogix(Extended)
SIEMENS S7-300/400	JTEKT TOYOPUC-PC	FUJI MICREX-F
GE(SNP-X)	KOYO KOSTAC/DL	LS Industrial Systems MASTER-K
Hirata HNC	IAI robocylinder	Panasonic MINAS A4
Panasonic MINAS A5	Muratec MPC	MELSERVO-J4,J3,J2S/M,JE
FREQROL 500/700/800,SENSORLESS SERVO	FREQROL 800	FREQROL(Batch monitor)
OMRON THERMAC/INPANEL NEO	OMRON Digital Temperature Controller	AZBIL SDC/DMC
AZBIL DMC50	RKC SR Mini HG (MODBUS)	FUJI Temperature Controller/Digital Controller
YOKOGAWA GREEN/UT100/UT2000/ UTAdvanced	SHINKO TECHNOS CONTROLLER	CHINO MODBUS device
MODBUS/RTU Master		

The following shows the corresponding devices.

Device				Station number															
Ch1	Ch2	Ch3	Ch4	b15	b14	b13	b12	b11	b10	b9	b8	b7	b6	b5	b4	b3	b2	b1	b0
GS281	GS301	GS321	GS341	15	14	13	12	11	10	9	8	7	6	5	4	3	2	1	0*1
GS282	GS302	GS322	GS342	31	30	29	28	27	26	25	24	23	22	21	20	19	18	17	16
GS283	GS303	GS323	GS343	47	46	45	44	43	42	41	40	39	38	37	36	35	34	33	32
GS284	GS304	GS324	GS344	63	62	61	60	59	58	57	56	55	54	53	52	51	50	49	48
GS285	GS305	GS325	GS345	79	78	77	76	75	74	73	72	71	70	69	68	67	66	65	64
GS286	GS306	GS326	GS346	95	94	93	92	91	90	89	88	87	86	85	84	83	82	81	80
GS287	GS307	GS327	GS347	111	110	109	108	107	106	105	104	103	102	101	100	99	98	97	96
GS288	GS308	GS328	GS348	127 *1*2	126 *1*2	125 *1*2	124 *1*2	123 *1*2	122 *1*2	121 *1*2	120	119	118	117	116	115	114	113	112

*1 When CC-Link IE controller network connection is not used.
*2 When CC-Link IE field network connection is not used.

For details on the GS Device, refer to the following manual.

📖GT Designer3 (GOT2000) Screen Design Manual

Network No., station No. notification

The network No. and station No. of the GOT in Ethernet connection are stored at GOT startup.
If connected by other than Ethernet, 0 is stored.

Device				Description
CH1	CH2	CH3	CH4	
GS376	GS378	GS380	GS382	Network No. (1 to 239)
GS377	GS379	GS381	GS383	Station No. (1 to 64)

When using the station monitoring function in the CC-Link IE Field Network connection

When a submaster station is on the network, use the CC-Link IE Field Network communication unit (GT15-J71GF13-T2) with the software version C or later.
The software version is the 10th digit of the serial number described on the rating plate of the unit.

Detectable faulty stations using the station monitoring function (CC-Link IE TSN connection)

Detectable faulty stations depend on the communication mode of the cyclic transmission.

■When the communication mode is multicast mode

Data link faulty stations are all detected from the data link status of each station.

For details of the data link status, refer to the following.

📖MELSEC iQ-R CC-Link IE TSN User's Manual (Application)

■When the communication mode is unicast mode

Only the errors in the master station are detected.

Stations other than the master station are always recognized as faulty stations.

Check on GX Developer

Check if the PLC CPU recognizes the GOT (For bus connection) (QCPU (Q mode) only)

Using the [System monitor] of GX Developer, check if the PLC CPU recognizes the GOT or not.

For the GX Developer operation method, refer to the following manual.

📖GX Developer Version □Operating Manual

■Check the Module Name, I/O Address and Implementation Position. (The display example is based on GX Developer Version 8)

Startup procedure: GX Developer → [Diagnostics] → [System monitor]

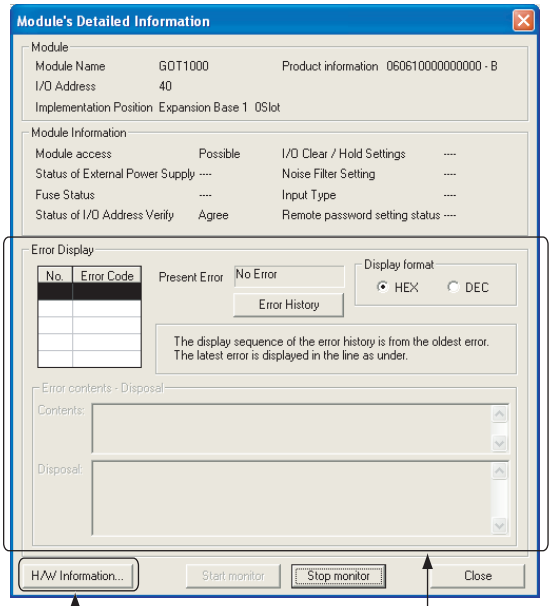

Checking the wiring state (For optical loop system only)

Check if the optical fiber cable is connected correctly in [Loop test] of GX Developer.

For the GX Developer operation method, refer to the following manual.

📖Q Corresponding MELSECNET/H Network System Reference Manual (PLC to PLC network)

■Check the [Receive direction error station] (The display example on GX Developer Version 8)

Startup procedure: GX Developer → [Diagnostics] → [MELSECNET (II)/10/H diagnostics] → Loop test

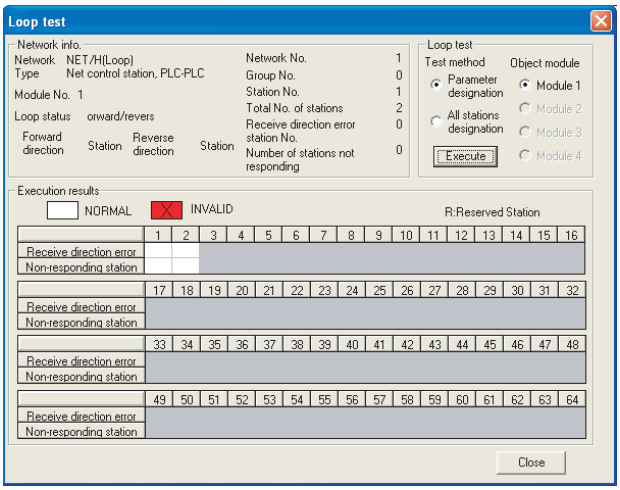

Checking if the GOT is performed the data link correctly

■For MELSECNET/H, MELSECNET/10 network system

Check if the GOT is performed the data link correctly in [Other station information].

For the GX Developer operation method, refer to the following manual.

📖Q Corresponding MELSECNET/H Network System Reference Manual (PLC to PLC network)

- Check [Communication status of each station] and [Data-Link status of each station] (The display example on GX Developer Version 8)

Startup procedure: GX Developer → [Diagnostics] → [MELSECNET (II)/10/H diagnostics] → Other station info.

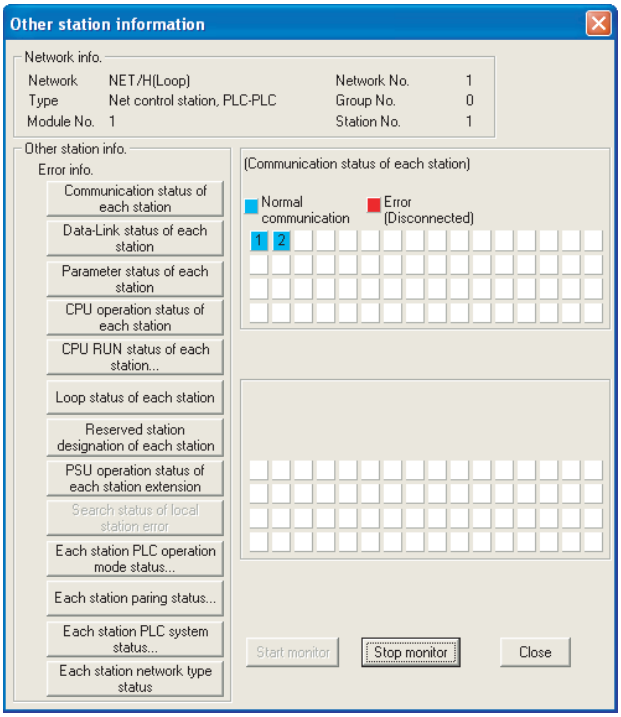

■For CC-Link IE Controller Network system

Use [CC IE Control diagnostics…] of GX Developer to check if the GOT is correctly performed the data link.

For the GX Developer operation method, refer to the following manual.

📖CC-Link IE Controller Network Reference Manual

- Check the [Select station network device status display] (The display example on GX Developer Version 8)

Startup procedure: GX Developer → [Diagnostics] → [CC IE Control diagnostics…] → [CC IE Control Network Diagnostics]

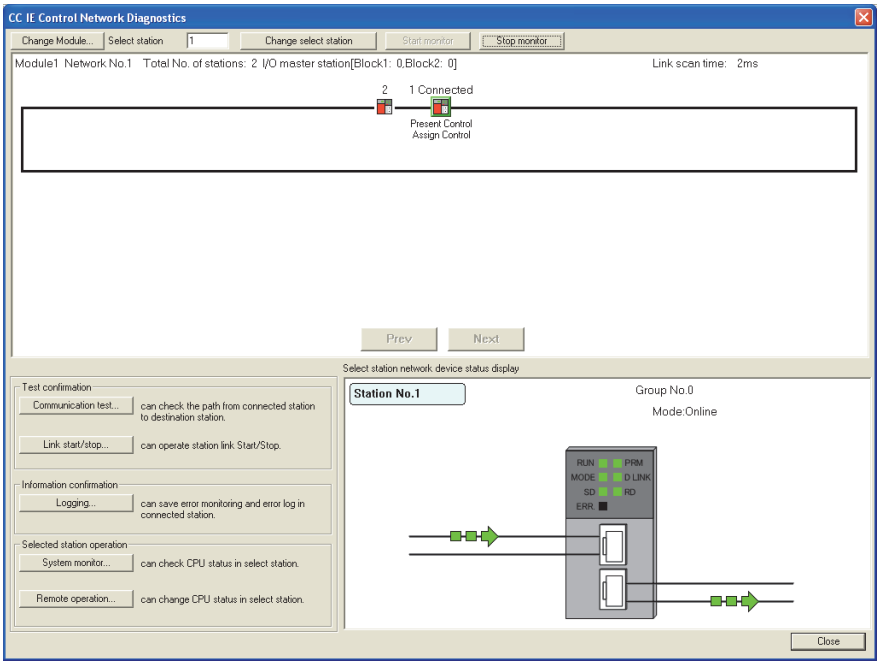

■For CC-Link system

Use [Monitoring other station] of the GX Developer to check if the GOT is correctly performed the data link.

For the GX Developer operation method, refer to the following manual.

📖CC-Link System Master/Local Module User's Manual QJ61BT11N

- Check the [Status] (The display example on GX Developer Version 8)

Startup procedure: GX Developer → [Diagnostics] → [CC-Link / CC-Link LT diagnostics] → Monitoring other station

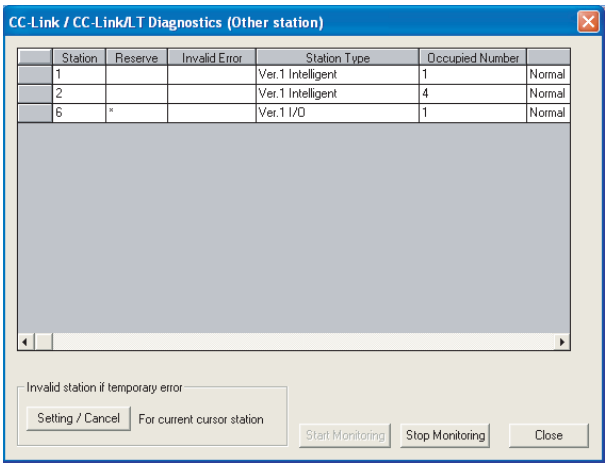

Check on GX Works2

For CC-Link IE Controller Network system

Use [CC IE Field diagnostics] of GX Works2 to check if the GOT is correctly performed the data link.

For the GX Works2 operation method, refer to the following manual.

📖MELSEC-Q CC-Link IE Field Network Master/Local Module User's Manual

Startup procedure: GX Works2 → [diagnostics] → [CC IE Field diagnostics]

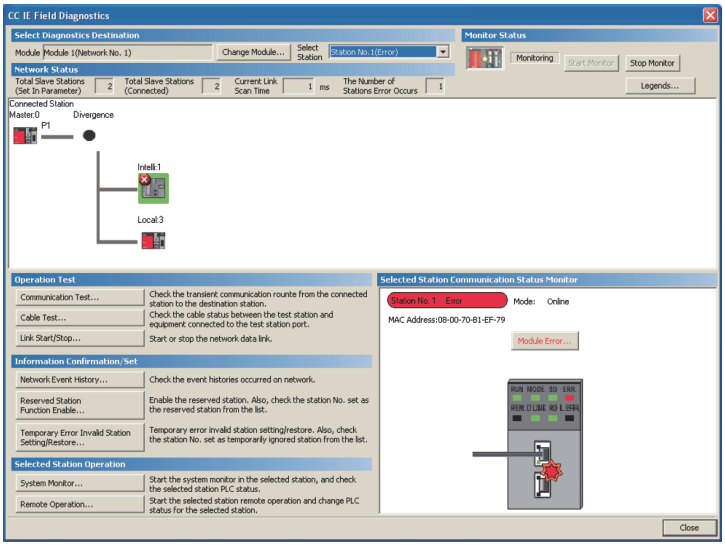

Check on the PLC

Checking the wiring state of the optical fiber cable (For CC-Link IE Controller Network only)

Check if the fiber-optic cable is connected correctly to all the modules in the CC-Link IE Controller Network.

Perform the line test from the control station of the CC-Link IE Controller Network to check the wiring state of the fiber-optic cable.

For the line testing method, refer to the following manual.

📖CC-Link IE Controller Network Reference Manual

Checking the wiring state of the CC-Link dedicated cable (For CC-Link system only)

Check if the CC-Link dedicated cable is connected correctly to all the modules in the CC-Link system.

Perform the line test from the master station of the CC-Link System to check the wiring state of the CC-Link dedicated cable.

For the line testing method, refer to the following manuals.

📖CC-Link System Master/Local Module User's Manual QJ61BT11N

📖CC-Link System Master/Local Module User's Manual AJ61QBT11, A1SJ61QBT11

📖CC-Link System Master/Local Module User's Manual AJ61BT11, A1SJ61BT11

PART 2 MITSUBISHI ELECTRIC PLC CONNECTIONS

2 ACCESS RANGE FOR MONITORING

3 HOW TO MONITOR REDUNTANT SYSTEM

4 ETHERNET CONNECTION

5 DIRECT CPU CONNECTION (SERIAL)

6 SERIAL COMMUNICATION CONNECTION

7 BUS CONNECTION

8 MELSECNET/H, MELSECNET/10 CONNECTION (PLC TO PLC NETWORK)

9 CC-Link IE TSN CONNECTION

10 CC-Link IE CONTROLLER NETWORK CONNECTION

11 CC-Link IE FIELD NETWORK CONNECTION

12 CC-Link CONNECTION (INTELLIGENT DEVICE STATION)

13 CC-Link CONNECTION (Via G4)

2 ACCESS RANGE FOR MONITORING

- Page 92 Access Range for Monitoring Stations on Network Systems
- Page 105 Access Range for Monitoring when Using Ethernet Connection
- Page 107 CC-Link System Access Range for Monitoring
- Page 109 Access Range for Monitoring Stations on the Data Link System
- Page 110 Access Range for Monitoring when Connecting FXCPU
- Page 111 Connection to Remote I/O Station
- Page 114 Connection to the Head Module

2.1 Access Range for Monitoring Stations on Network Systems

GT 27 GT 25 GT 23 GS 25

This section shows the access range for monitoring the stations on the MELSECNET/H, MELSECNET/10, CC-Link IE TSN, CC-Link IE Controller Network, and CC-Link IE Field Network.

Bus connection

■When connecting to multiple CPU system

- The GOT can monitor the control station and all the normal stations on the network.

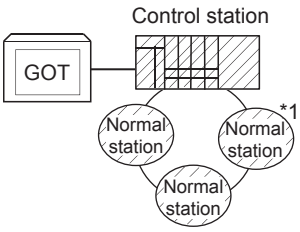

- The GOT can monitor the control station and all the normal stations on other networks.

(For monitoring stations on other networks, be sure to set the routing parameter)

When the Universal model QCPU is used as a relay station, the GOT can monitor stations with the station No.65 or later in the CC-Link IE controller network.

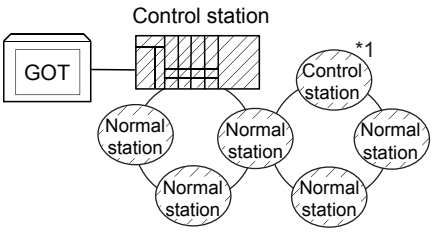

- When connecting to the multiple CPU system, the GOT can monitor CPU No.1 to No.4.

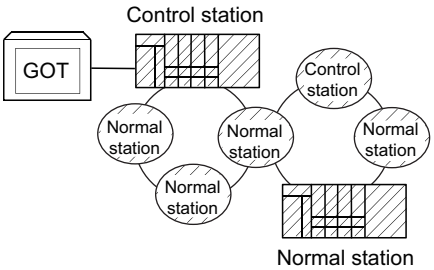

- Devices of other stations (other than devices B and W that are allocated by the network parameter) may not allow monitoring depending on their PLC CPU.

☞ Page 98 Monitor accessible range of other stations and setting method of monitor devices (Examples 1 to 2)

*1 The control station and normal station correspond to the master station and local station in the CC-Link IE field network respectively.

■When connecting to QCPU (Q mode)/QnACPU/AnUCPU

- The GOT can monitor the control station and all the normal stations on the network.

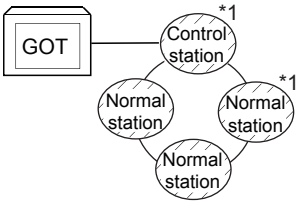

- The GOT can monitor the control station and all the normal stations on other networks.

(For monitoring stations on other networks, be sure to set the routing parameter)

When the Universal model QCPU is used as a relay station, the GOT can monitor stations with the station No.65 or later in the CC-Link IE controller network.

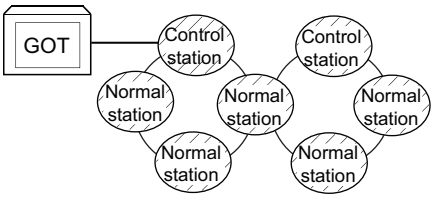

- When connected to a relay station and the data link system is included, the master station and local stations can be monitored.
- When connected to a relay station, it is not necessary to designate the data link parameter [Effective unit number for accessing other stations] for the PLC CPU of the connected station. (Even if designated, the parameter is ignored)

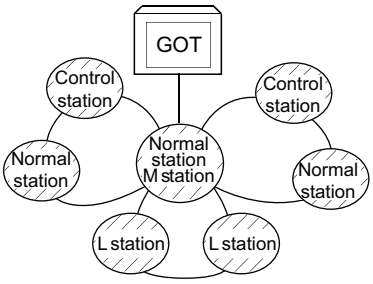

- Devices of other stations (other than devices B and W that are allocated by the network parameter) may not allow monitoring depending on their PLC CPU.

☞ Page 98 Monitor accessible range of other stations and setting method of monitor devices (Examples 1 to 2)

*1 The control station and normal station correspond to the master station and local station in the CC-Link IE field network respectively.

■When connecting to AnACPU/AnNCPU

- The GOT can monitor the control station on the network.

When the PLC CPU on the control station is the QCPU (Q mode) or QnACPU, the GOT cannot monitor devices other than B and W assigned for the network parameter.

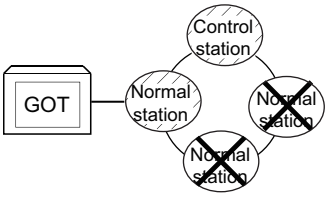

- The GOT cannot monitor normal stations on the network.
- The GOT cannot monitor any stations on the other networks.

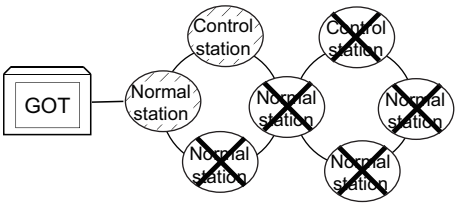

Direct CPU connection (serial)/serial communication connection

■When connecting to multiple CPU system

- Corresponding to the access range described in Page 92 When connecting to multiple CPU system.
- RCPU cannot be monitored.

■When connecting to RCPU

- For the serial communication connection, refer to the following.

☞ Page 96 MELSECNET/H connection, MELSECNET/10 connection, CC-Link IE TSN connection, CC-Link IE Controller Network connection, CC-Link IE Field Network connection

- The GOT cannot access a CPU via MELSECNET (II), computer link, or CC-Link network.
- When monitoring an RCPU, if a PLC CPU other than the RCPU is used in the route from the connected station to the RCPU to be monitored, the RCPU cannot be accessed.

■When connecting to QCPU (Q mode)/QnACPU

- Corresponding to the access range described in Page 93 When connecting to QCPU (Q mode)/QnACPU/AnUCPU.
- RCPU cannot be monitored.

■When connecting to QCPU (A mode)/AnUCPU

- The GOT can monitor the control station and all the normal stations on the network.

For monitoring devices (other than B and W assigned for the network parameter) of other stations, the GOT cannot monitor the devices of the PLC CPU that is the QCPU (Q mode) or QnACPU.

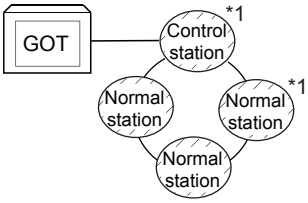

- If connected to a relay station, use data link parameter [Effective unit number for accessing other stations] to designate the unit number that is connected to the network to be monitored.

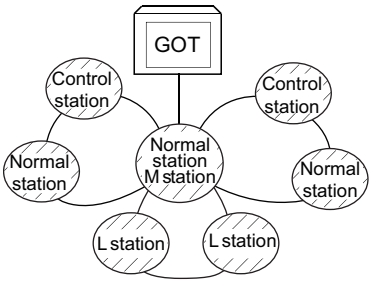

- RCPU cannot be monitored.

■When connecting to AnACPU/AnNCPU

- Corresponding to the access range described in Page 94 When connecting to AnACPU/AnNCPU.
- RCPU cannot be monitored.

■When connecting to Motion CPU (Q series), CNC C70, or robot controller (Q series) using the direct CPU connection (serial)

- Monitor the motion CPU (Q series), CNC (CNC C70), or robot controller (CRnQ-700) via the following QCPUs in the multiple CPU system.

Controller		Relay CPU
Motion CPU (Q Series)	Q172HCPU, Q173HCPU	QCPU (Q mode)
	Q172DCPU, Q173DCPU	QnUCPU
CNC C70	Q173NCCPU	
Robot controller (Q series)	CRnQ-700 (Q172DRCPU), CR800-Q (Q172DSRCPU)	

*1 The control station and normal station correspond to the master station and local station in the CC-Link IE field network respectively.

- RCPU cannot be monitored.

■When connecting to LCPU

- Refer to the following.

☞ Page 96 MELSECNET/H connection, MELSECNET/10 connection, CC-Link IE TSN connection, CC-Link IE Controller Network connection, CC-Link IE Field Network connection

- RCPU cannot be monitored.

CC-Link connection (intelligent device station), CC-Link connection (via G4)

- Only the station connected to the GOT can be monitored.

☞ Page 98 Monitor accessible range of other stations and setting method of monitor devices Example 6: When using CC-Link connection (intelligent device station) /CC-Link connection (via G4)

- When the station connected to the GOT is in the multiple CPU system, the GOT can monitor CPU No.1 to No.4.
- The GOT cannot monitor other stations.
- The GOT cannot monitor any stations on the other networks.

MELSECNET/H connection, MELSECNET/10 connection, CC-Link IE TSN connection, CC-Link IE Controller Network connection, CC-Link IE Field Network connection

Point

Precautions for cyclic transmission

Devices that can be accessed by cyclic transmission differ according to connection type.

Connection type	Device that can be accessed
MELSECNET/H	B, W, LB, LW, SB, SW
MELSECNET/10	B, W, LB, LW, SB, SW
CC-Link IE TSN	RX, RY, Ww, Wr, LB, LW, SB, SW
CC-Link IE Controller Network	B, W, LB, LW, SB, SW
CC-Link IE Field Network	X, Y, RX, RY, Ww, Wr, SB, SW

- The GOT is regarded as a normal station and monitors the control station and all normal stations on the network.

When the monitoring target is a PLC CPU within a multiple CPU system, the GOT can monitor CPU No. 1 to CPU No. 4 by specifying CPU No.

When monitoring the CPU of the multiple CPU system via CC-Link IE TSN, the CPU may not be monitored depending on its firmware version.

For the firmware version of the CPU that can be monitored, refer to the following.

☞ Page 622 Precautions

- When monitoring a cyclic device of other stations via CC-Link IE TSN, the following conditions must be satisfied.

GX Works3: Set [Communication Mode] of the master station to [Multicast].

CC-Link IE TSN communication unit (GT25J71GN13-T2): Firmware version 02 or later

CC-Link IE TSN master/local module (RJ71GN11-T2): Firmware version 04 or later

- When monitoring other networks, a CPU on another Ethernet, MELSECNET/H, MELSECNET/10, CC-Link IE TSN, CC-Link IE Controller Network, or CC-Link IE Field Network is accessible via the PLC CPU. (When monitoring other networks via the R motion, only a CPU on another Ethernet network is accessible.)

However, the GOT cannot monitor the CNC C70 on other networks.

On the Ethernet network, only QCPU (Q mode) and QnACPU can be accessed.

- When monitoring other networks in MELSECNET/10 connection, install the MELSECNET/H communication unit on the GOT.
- To monitor other networks, setting of routing parameters is required.

For routing parameter setting, refer to the following manuals.

For the routing parameter setting for the GOT, refer to the following.

☞ Page 541 MELSECNET/H, MELSECNET/10 CONNECTION (PLC TO PLC NETWORK)
☞ Page 595 CC-Link IE TSN CONNECTION
☞ Page 625 CC-Link IE CONTROLLER NETWORK CONNECTION
☞ Page 665 CC-Link IE FIELD NETWORK CONNECTION

For the routing parameter setting for the PLC CPU, refer to the following.

MELSECNET/H, MELSECNET/10 connection

📖Q Corresponding MELSECNET/H Network System Reference Manual (PLC to PLC network)

CC-Link IE TSN connection

📖MELSEC iQ-R CPU Module User's Manual (Application)

CC-Link IE Controller Network connection

📖MELSEC iQ-R CPU Module User's Manual (Application)

📖MELSEC-Q CC-Link IE Controller Network Reference Manual

CC-Link IE Field Network connection

📖MELSEC iQ-R CPU Module User's Manual (Application)

📖MELSEC-Q CC-Link IE Field Network Master/Local Module User's Manual

- If devices of other stations (other than devices B and W that are allocated by the network parameter) are monitored, monitoring may not be available depending on the PLC CPU of the network system to be monitored.

☞ Page 98 Monitor accessible range of other stations and setting method of monitor devices Example 5: When using MELSECNET/10 connection

- In the MELSECNET/H, MELSECNET/10, CC-Link IE TSN, CC-Link IE Controller Network, or CC-Link IE Field Network connection, the data link status can be checked by monitoring the device status of link special relay (SB) and link special register (SW) of the communication unit (host) mounted to the GOT.

For the details, refer to the following manual.

📖Reference manual of the relevant network

Point

- When using the redundant system (QCPU) as a relay station

For monitoring other networks by using the redundant system (QCPU) as a relay station, configure the MELSEC redundant settings.

- When path switching occurs due to cable disconnection

When path switching occurs due to cable disconnection, the station of the control system can be monitored through a tracking cable, but the station of other networks cannot be monitored through the redundant system.

Monitoring devices of other stations on the network

If devices of other stations on the network system are monitored, the display speed will be significantly reduced. Therefore, monitor the link relay (B) and link register (W) that are allocated by the network parameter.

Monitoring devices of other networks (Bus connection, direct CPU connection (serial), serial communication connection)

- Be sure to designate the routing parameter to the PLC CPU of the connected station.
- If another network is monitored, the display speed of object etc. will be significantly reduced.

Monitor accessible range of other stations and setting method of monitor devices

Example 1: When using bus connection

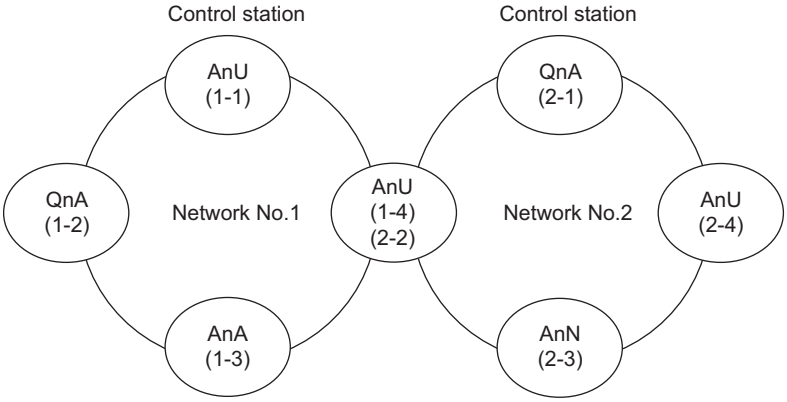

- Monitor accessible range of devices (other than B or W) of other stations or other networks

Specify the accessing network No. or station as shown in the following table.

■To monitor B or W of the connected station (host station) assigned with a network parameter, specify the host station.

■To monitor another station (other than B or W) or another network, specify the station (network No. and station No.).

Station connected to GOT	Station to be accessed							
	Network No.1				Network No.2			
	AnU (1-1)	QnA (1-2)	AnA (1-3)	AnU (1-4)	QnA (2-1)	AnU (2-2)	AnN (2-3)	AnU (2-4)
AnU (1-1)	○	×	○	○	×	○	×	○
	Host	—	Other (1-3)	Other (1-4)	—	Other (2-2)	—	Other (2-4)
QnA (1-2)	○	○	×	○	○	○	×	○
	Other (1-1)	Host	—	Other (1-4)	Other (2-1)	Other (2-2)	—	Other (2-4)
AnA (1-3)	○	×	○	×	×	×	×	×
	Other (0-0)	—	Host	—	—	—	—	—
AnU (1-4) (2-2)	○	×	×	○	×	○	×	○
	Other (1-1)	—	—	Host	—	Host	—	Other (2-4)
QnA (2-1)	○	○	×	○	○	○	○	○
	Other (1-1)	Other (1-2)	—	Other (1-4)	Host	Other (2-2)	Other (2-3)	Other (2-4)
AnN (2-3)	×	×	×	×	×	×	○	×
	—	—	—	—	—	—	Host	—
AnU (2-4)	○	×	×	○	×	○	×	○
	Other (1-1)	—	—	Other (1-4)	—	Other (2-2)	—	Host

How to read the table

Upper line: Accessibility
○ : Accessible
× : Not accessible

Lower line: Network settings
Host
Other (Network No. - Station number)

Point

Monitoring link device B or W

For monitoring devices B and W that are allocated by the link parameter, use the host device number even when designating devices allocated to another station.

Otherwise, the display speed will be reduced.

Example 2: When using bus connection

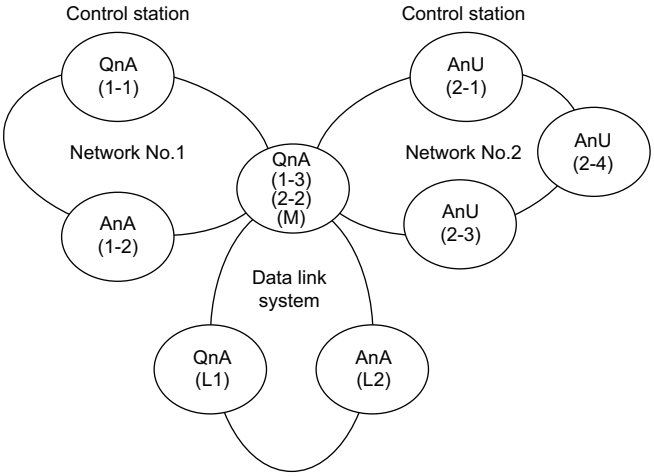

- Monitor accessible range of devices (other than B or W) of other stations or other networks

Specify the accessing network No. or station as shown in the following table.

■To monitor B or W of the connected station (host station) assigned with a network parameter, specify the host station.

■To monitor another station (other than B or W) or another network, specify the station (network No. and station No.).

Station connected to GOT	Station to be accessed									
	Network No.1			Network No.2				Data link system		
	QnA (1-1)	AnA (1-2)	QnA (1-3)	AnU (2-1)	QnA (2-2)	AnU (2-3)	AnU (2-4)	QnA (M)	QnA (L1)	AnA (L2)
QnA (1-1)	○	○	○	○	○	○	○	○	×	×
	Host	Other (1-2)	Other (1-3)	Other (2-1)	Other (2-2)	Other (2-3)	Other (2-4)	Other (1-3) or Other (2-2)	—	—
AnA (1-2)	×	○	×	×	×	×	×	×	×	×
	—	Host	—	—	—	—	—	—	—	—
QnA (1-3) (2-2) (M)	○	×	○	○	○	○	○	○	×	○
	Other (1-1)	—	Host	Other (2-1)	Host	Other (2-3)	Other (2-4)	Host	—	Other (0-2)*1
AnU (2-1)	×	×	×	○	×	○	○	×	×	×
	—	—	—	Host	—	Other (2-3)	Other (2-4)	—	—	—
AnU (2-3)	×	×	×	○	×	○	○	×	×	×
	—	—	—	Other (2-1)	—	Host	Other (2-4)	—	—	—
AnU (2-4)	×	×	×	○	×	○	○	×	×	×
	—	—	—	Other (2-1)	—	Other (2-3)	Host	—	—	—
QnA (L1)	×	×	×	×	×	×	×	×	○	×
	—	—	—	—	—	—	—	—	Host	—
AnA (L2)	×	×	×	×	×	×	×	×	×	○
	—	—	—	—	—	—	—	—	—	Host

*1 When monitoring the data link system, designate the network No. as 0.

How to read the table

Upper line: Accessibility
○ : Accessible
× : Not accessible

Lower line: Network settings
Host
Other (Network No. - Station number)

Point

Monitoring link device B or W

For monitoring devices B and W that are allocated by the link parameter, use the host device number even when designating devices allocated to another station.

Otherwise, the display speed will be reduced.

Example 3: When using direct CPU connection (serial) or serial communication connection

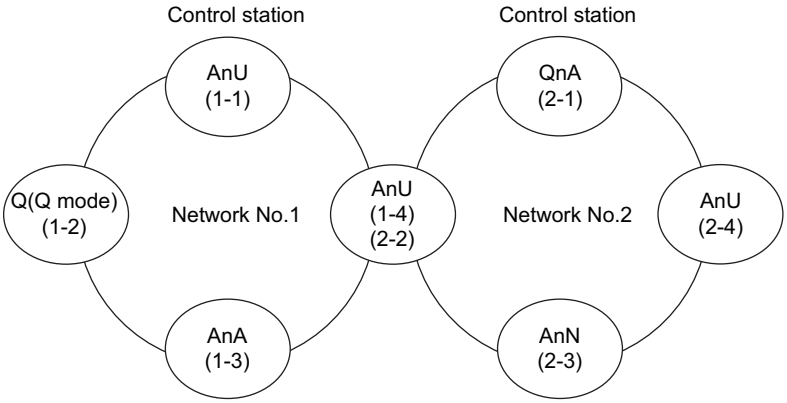

- Monitor accessible range of devices (other than B or W) of other stations or other networks

Specify the accessing network No. or station as shown in the following table.

■To monitor B or W of the connected station (host station) assigned with a network parameter, specify the host station.

■To monitor another station (other than B or W) or another network, specify the station (network No. and station No.).

Station connected to GOT	Station to be accessed							
	Network No.1				Network No.2			
	AnU (1-1)	Q(Q mode) (1-2)	AnA (1-3)	AnU (1-4)	QnA (2-1)	AnU (2-2)	AnN (2-3)	AnU (2-4)
AnU (1-1)	○	×	○	○	×	○	×	×
	Host	—	Other (1-3)	Other (1-4)	—	Other (2-2)	—	—
Q (Q mode) (1-2)	○	○	×	○	○	○	×	○
	Other (1-1)	Host	—	Other (1-4)	Other (2-1)	Other (2-2)	—	Other (2-4)
AnA (1-3)	○	×	○	×	×	×	×	×
	Other (0-0)	—	Host	—	—	—	—	—
AnU (1-4) (2-2)	○	×	×	○	×	○	×	×
	Other (1-1)	—	—	Host	—	Host	—	—
QnA (2-1)	○	○	×	○	○	○	○	○
	Other (1-1)	Other (1-2)	—	Other (1-4)	Host	Other (2-2)	Other (2-3)	Other (2-4)
AnN (2-3)	×	×	×	×	×	×	○	×
	—	—	—	—	—	—	Host	—
AnU (2-4)	×	×	×	×	×	○	×	○
	—	—	—	—	—	Other (2-2)	—	Host

How to read the table

Upper line: Accessibility
○ : Accessible
× : Not accessible

Lower line: Network settings
Host
Other (Network No. - Station number)

Point

Monitoring link device B or W

For monitoring devices B and W that are allocated by the link parameter, use the host device number even when designating devices allocated to another station.

Otherwise, the display speed will be reduced.

Example 4: When using direct CPU connection (serial) or serial communication connection

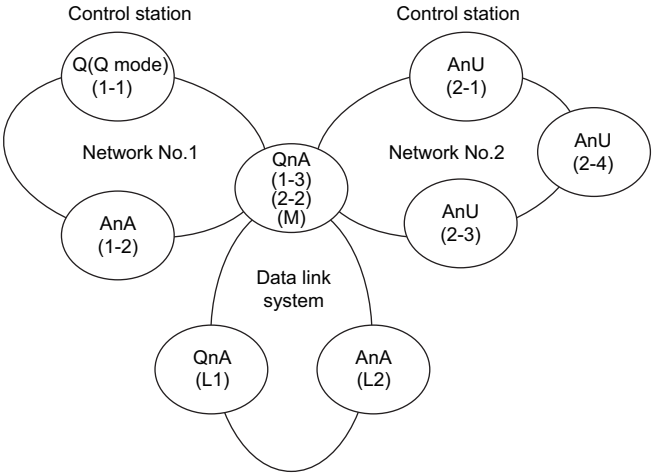

- Monitor accessible range of devices (other than B or W) of other stations or other networks

Specify the accessing network No. or station as shown in the following table.

■To monitor B or W of the connected station (host station) assigned with a network parameter, specify the host station.

■To monitor another station (other than B or W) or another network, specify the station (network No. and station No.).

Station connected to GOT	Station to be accessed									
	Network No.1			Network No.2				Data link system		
	QnA (1-1)	AnA (1-2)	QnA (1-3)	AnU (2-1)	QnA (2-2)	AnU (2-3)	AnU (2-4)	QnA (M)	QnA (L1)	AnA (L2)
Q (Q mode) (1-1)	○	○	○	○	○	○	○	○	×	×
	Host	Other (1-2)	Other (1-3)	Other (2-1)	Other (2-2)	Other (2-3)	Other (2-4)	Other (1-3) or Other (2-2)	—	—
AnA (1-2)	×	○	×	×	×	×	×	×	×	×
	—	Host	—	—	—	—	—	—	—	—
QnA (1-3) (2-2) (M)	○	×	○	○	○	○	○	○	×	○
	Other (1-1)	—	Host	Other (2-1)	Host	Other (2-3)	Other (2-4)	Host	—	*1 Other (0-2)
AnU (2-1)	×	×	×	○	×	○	○	×	×	×
	—	—	—	Host	—	Other (2-3)	Other (2-4)	—	—	—
AnU (2-3)	×	×	×	○	×	○	○	×	×	×
	—	—	—	Other (2-1)	—	Host	Other (2-4)	—	—	—
AnU (2-4)	×	×	×	○	×	○	○	×	×	×
	—	—	—	Other (2-1)	—	Other (2-3)	Host	—	—	—
QnA (L1)	×	×	×	×	×	×	×	×	○	×
	—	—	—	—	—	—	—	—	Host	—
AnA (L2)	×	×	×	×	×	×	×	×	×	○
	—	—	—	—	—	—	—	—	—	Host

*1 When monitoring the data link system, designate the network No. as 0.

How to read the table

Upper line: Accessibility
○ : Accessible
× : Not accessible

Lower line: Network settings
Host
Other (Network No. - Station number)

Point

Monitoring link device B or W

For monitoring devices B and W that are allocated by the link parameter, use the host device number even when designating devices allocated to another station.

Otherwise, the display speed will be reduced.

Example 5: When using MELSECNET/10 connection

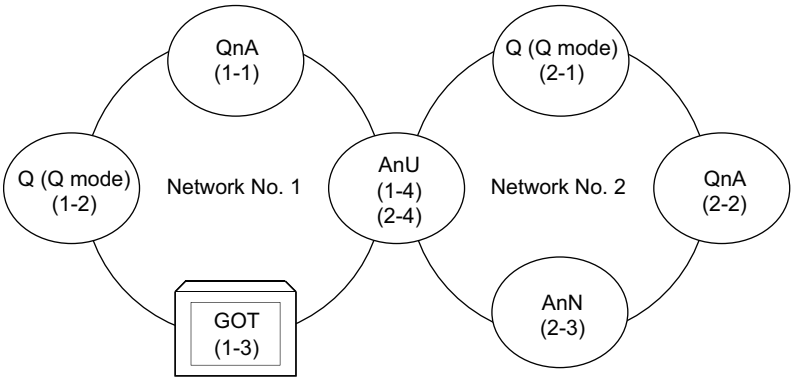

- Monitor access range for other station devices (other than B and W)

Station connected to GOT	Station to be accessed							
	Network No.1				Network No.2			
	QnA (1-1)	Q (Q mode) (1-2)	GOT (1-3)	AnU (1-4)	Q (Q mode) (2-1)	QnA (2-2)	AnN (2-3)	AnU (2-4)
GOT (1-3)	○	○	——	○	○	○	×	○

○ : Accessible × : Not accessible

- Designating network No. and station number for setting monitor device

■Monitoring devices B and W that are allocated by network parameter

NW No.: 1, Station number: Host

Point

For monitoring devices B and W that are allocated by the link parameter, use the local device number if designating devices allocated to another station.

Otherwise, the display speed will be reduced.

■Monitoring other stations (other than B and W)

Station connected to GOT	Station to be accessed			
	QnA (1-1)	Q (Q mode) (1-2)	GOT (1-3)	AnU (1-4)
GOT (1-3)	1, Other (1)	1, Other (2)	——	1, Other (4)

How to read the table 1, Other (2)

↑ ↑

NW No. Station number

Example 6: When using CC-Link connection (intelligent device station) /CC-Link connection (via G4)

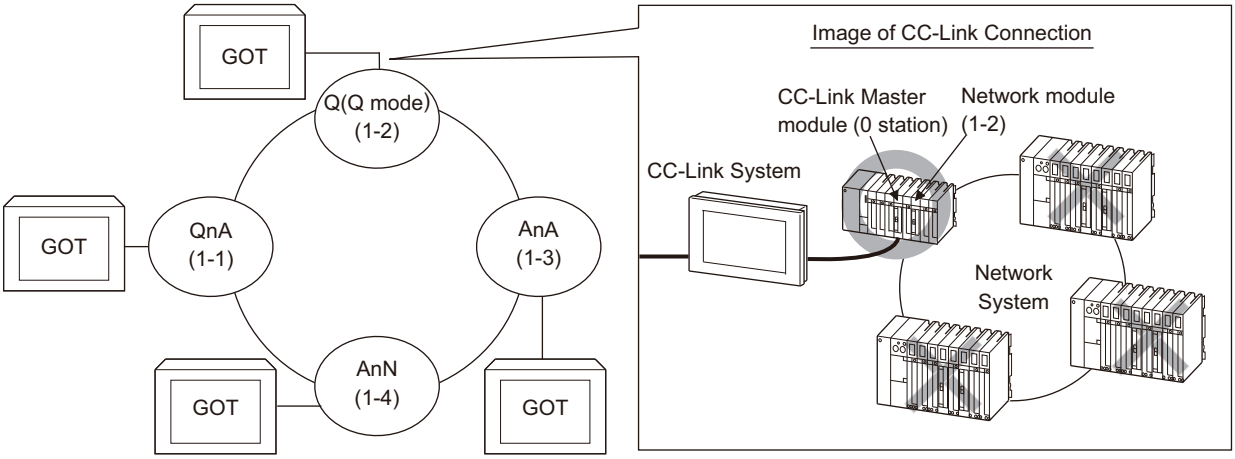

Station connected to GOT	Station to be accessed			
	QnA (1-1)	**Q (Q mode) (1-2)**	**AnA (1-3)**	**AnN (1-4)**
QnA (1-1)	○	×	×	×
Q(Q mode) (1-2)	×	○	×	×
AnA (1-3)	×	×	○	×
AnN (1-4)	×	×	×	○

○ : Accessible × : Not accessible

2.2 Access Range for Monitoring when Using Ethernet Connection

GT 27 GT 25 GT 23 GT 21 GS 25 GS 21

Access range

■MITSUBISHI ELECTRIC PLC

The GOT can monitor the PLC via the Ethernet module set in [Connected Ethernet Controller Setting] on GT Designer3.
The GOT can access CPUs on another Ethernet network, MELSECNET/H, MELSECNET/10, CC-Link IE Controller Network, or CC-Link IE Field Network via an RCPU, R motion (Ver.03 or later), QCPU, QnACPU, or LCPU. (Monitoring other networks via an R motion (earlier than Ver.03) is available only by Ethernet.)
However, the GOT cannot monitor the CNC C70 on other networks.
(The GOT cannot monitor the AnNCPU on the CC-Link IE Controller Network, MELSECNET/H, and MELSECNET/10 networks)
When monitoring the RCPU on CC-Link IE TSN, it can be accessed only when all stations from the connected station to the station to be monitored are RCPUs.
For MELSEC iQ-F series, the GOT can access CPUs on other networks (CC-Link IE TSN and CC-Link IE Field Network) via the PLC CPUs.
To monitor CPUs on the MELSECNET/H, MELSECNET/10, CC-Link IE TSN, CC-Link IE Controller Network, and CC-Link IE Field Network, set the routing parameter.
For the routing parameter setting, refer to the following manuals.

- Routing parameter setting of the GOT

☞ Page 217 ETHERNET CONNECTION

- Routing parameter setting for accessing CPUs on the MELSECNET/H network system, or MELSECNET/10 network system

📖Q corresponding MELSECNET/H Network System Reference Manual (PLC to PLC network)

- Routing parameter setting for accessing CPUs on the CC-Link IE Controller Network

📖CC-Link IE Controller Network Reference Manual

- Routing parameter setting for accessing CPUs on the CC-Link IE Field Network

📖MELSEC-Q CC-Link IE Field Network Master/Local Module User's Manual
📖CC-Link IE Field Network Ethernet Adapter Module User's Manual

- Routing parameter settings for accessing CPUs on CC-Link IE TSN

📖MELSEC iQ-R CC-Link IE TSN User's Manual (Application)

Monitoring via the MELSECNET (II) or MELSECNET/B network cannot be performed.

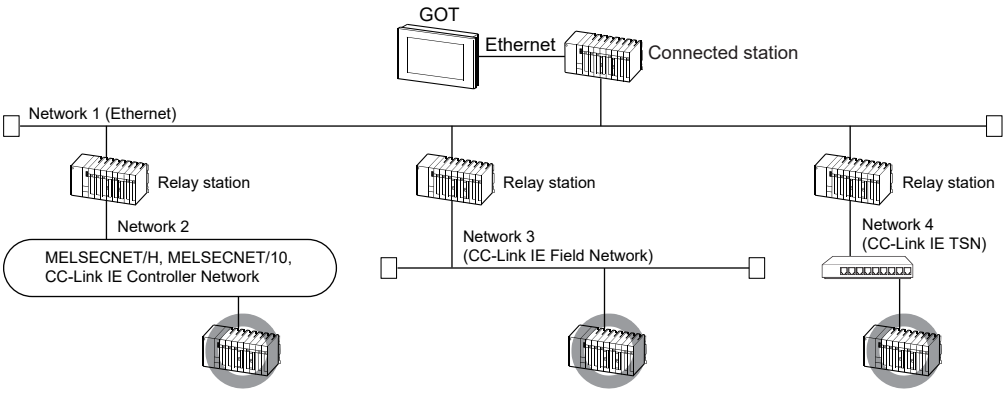

Point

• Host in the Ethernet connection

For the MELSECNET/H, MELSECNET/10, or CC-Link connection, the GOT is handled as the host station.
For the Ethernet connection, the station (Ethernet module) set as the host in [Connected Ethernet Controller Setting] of GT Designer3 is handled as the host station.

• When using the redundant system as a relay station

For monitoring other networks by using the redundant system as a relay station, configure the MELSEC redundant settings.

• When path switching occurs due to cable disconnection

When path switching occurs due to cable disconnection, the station of the control system can be monitored through a tracking cable, but the station of other networks cannot be monitored through the redundant system.

• When monitoring the RCPU on a different network

Use one of the following paths for monitoring.
Connection via an RCPU
Ethernet connection between the GOT and built-in Ethernet port QCPU, and Ethernet, CC-Link IE Controller Network, or CC-Link IE Field Network connection between the GOT and QCPU and the RCPU to be monitored

Various settings

For the Ethernet setting by GT Designer3, refer to the following.
☞ Page 217 ETHERNET CONNECTION

2.3 CC-Link System Access Range for Monitoring

GT 27 GT 25 GT 23 GS 25

When using bus connection/direct CPU connection (serial)/serial communication connection

Only connected stations can be monitored.

When using CC-Link connection (intelligent device station)

■Access range

The master station and local station can be monitored.

○ : Can be monitored, × : Cannot be monitored

Monitor target	Monitoring by cyclic transmission	Monitoring by transient transmission *2
Master station (Remote network Ver.2 mode)	○	○
Local station Station No.1 (Ver.1 compatible)	○	○
Local station Station No.6 (Ver.2 compatible)	○ *1	○

*1 Monitoring is available only when the CC-Link communication module is the GT15-J61BT13.

*2 The MELSEC iQ-F series (FX5U, FX5UC, FX5UJ) and MELSEC-FX (FX3G, FX3GC, FX3U, FX3UC) do not support the transient transmission.

All devices RX, RY, RWw and RWr that are allocated to the master station by the CC-Link parameter setting can be monitored.

When the monitor target is the multi-PLC system, CPU No. 1 to No. 4 can be monitored.

The device range of RX, RY, RWw, RWr to be allocated to the GOT differs according to the setting of the number of CC-Link communication units (one station/four station) occupied.

For details on the number of CC-Link stations occupied, refer to the following manual .

📖User's manual of the CC-Link master unit to be connected

■Setting device name and device number

• Monitoring devices RX, RY, RWw and RWr that are allocated to the master station by CC-Link parameter setting

Use the following device names.

For devices RX, RY, RWw and RWr, designate the addresses allocated by station number setting.

• In the case of CC-Link Ver.2 (Device names to be refreshed automatically are indicated as X, Y, and D.)

Device name on PLC CPU		Automatic refresh	Device name on master station		Link scan	GT Designer3 settings	
						Device name	Set device range
Input	X	←	Remote input	RX	←	X	X0 to X1FFF
Output	Y	→	Remote output	RY	→	Y	Y0 to Y1FFF
Register (write area)	D	→	Remote register (write area)	RWw	→	Ww	Ww0 to Ww7FF
Register (read area)	D	←	Remote register (read area)	RWr	←	Wr	Wr0 to Wr7FF

• In the case of CC-Link Ver.1 (Device names to be refreshed automatically are indicated as X, Y, and D.)

Device name on PLC CPU		Automatic refresh	Device name on master station		Link scan	GT Designer3 settings	
						Device name	Set device range
Input	X	←	Remote input	RX	←	X	X0 to X7FF
Output	Y	→	Remote output	RY	→	Y	Y0 to Y7FF
Register (write area)	D	→	Remote register (write area)	RWw	→	Ww	Ww0 to WwFF
Register (read area)	D	←	Remote register (read area)	RWr	←	Wr	Wr0 to WrFF

• Monitoring PLC CPU devices of other stations

Set the device name and device No.

☞ Page 1383 Settable Device Range

■Setting NW No. and station number

• When monitoring devices RX, RY, RWw and RWr that are allocated to the master station by CC-Link parameter setting

NW No.: 0, PLC station number: Local

• When monitoring PLC CPU devices of another station

NW No. 0, PLC station number: Other (Station number: n)

(n: Station number of another station to be monitored (0: Master station, 1-64: Local station))

Point

For monitoring devices RX, RY, RWw and RWr that are allocated by CC-Link parameter, use the local device even if designating devices allocated to another station.
Otherwise, the display speed will be reduced.

When using CC-Link connection (via G4) (Q series only)

■Access range

GT27 can monitor the master station and local stations.

■Setting NW No. and station number

• When monitoring master station

NW No.: 0, PLC station number: Host/other (station number: 0)

• When monitoring local station

NW No.: 0, PLC station number: Other (station number: 1 to 64)

■Setting device name and device number

Set the device name and device No.

☞ Page 1383 Settable Device Range

Monitoring overview

The following two methods are available for monitoring by the GOT with CC-Link communication unit.

Monitoring method	Monitoring by transient transmission*2	Monitoring by cyclic transmission*2
Contents	Devices of the PLC CPU on the CC-Link system master and local station are specified and monitored.	All remote inputs/outputs and remote registers assigned to the Master station by CC-Link parameter setting are specified and monitored.
Advantage	The CC-Link parameter setting sequence program is required. However, the GOT communication sequence program is not needed.*1	The data communication processing speed is high.
Disadvantage	The data communication processing speed is lower than that of cyclic transmission.	• Writing from the GOT (read command from the master station) can be performed only to remote outputs and remote registers assigned to the GOT of the master station and to the GOT internal registers. • GOT communication sequence program is required.*1

*1 This program is not required if the CC-Link parameter setting sequence program and GOT communication sequence program satisfy the following conditions.
• Use a QCPU (Q mode) or QnACPU whose number given in the DATE field of the rating plate is "9707B" or later as the PLC CPU of the master station.
• Use GX Developer or SW2□-GPPW and make CC-Link parameter setting and batch refresh device setting in the CC-Link setting on the package.
• For details of the connection method, refer to the following manual .
📖User's manual of the CC-Link master unit to be connected

*2 For whether the data can be sent to/received from the CC-Link Ver. 2 compatible station by transient transmission and cyclic transmission, refer to the following.
☞ Page 107 When using CC-Link connection (intelligent device station)

Point

In transient transmission, connection of several (five or more as a guideline) intelligent device stations (GOTs and intelligent device units) reduces the data communication speed.
To raise the data communication speed, increase the CC-Link system, for example, and do not connect five or more intelligent device stations to a single CC-Link system.

2.4 Access Range for Monitoring Stations on the Data Link System

The following shows the access range for monitoring the stations on the MELSECNET/B, (II) data link system.

GT 27 GT 25 GT 23 GS 25

Bus connection, direct CPU connection (serial), computer link connection

■When connecting to the master station

- Local stations can be monitored.

When the PLC CPU of the local station is QnACPU, devices other than B and W that are allocated by the link parameter cannot be monitored.

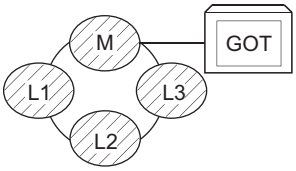

■When connecting to the local station

- The master station can be monitored.

However, when the PLC CPU of the local station is QnACPU, devices other than B and W that are allocated by the link parameter cannot be monitored.

- Other local stations cannot be monitored.

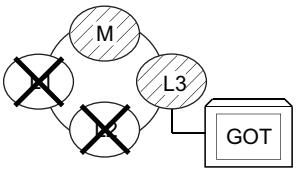

■When connecting to the master station on the third layer

- The master station on the second layer and local stations on the third layer can be monitored.

However, when the PLC CPU of the local station is QnACPU, devices other than B and W that are allocated by the link parameter cannot be monitored.

- Local stations on the second layer cannot be monitored.

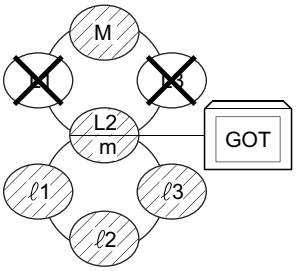

Monitoring devices of other stations

If devices of other stations on the data link system are monitored, the display speed will be significantly reduced. Therefore monitor the link relay (B) and link register (W) that are allocated by the link parameter.

Setting method of monitor device

The following example describes the method of setting the network No. and the station numbers when setting monitor devices .

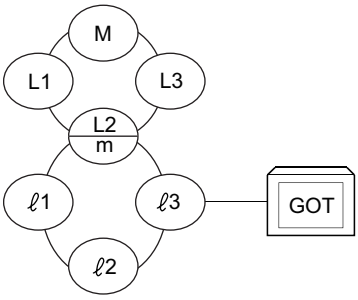

■Monitoring the connected station (host station) and B and W allocated by the link parameter

Specify the host station.

■Monitoring devices of other stations

Network No.: 0, Station number: Refer to the following table.

Setting of the station No.

Station connected to GOT	Station to be accessed						
	M	L1	L2 m	L3	ℓ1	ℓ2	ℓ3
M	Host	Other 1	Other 2	Other 3	—	—	—
L1	Other 0	Host	—	—	—	—	—
L2 m	Other 0	—	Host	—	Other 1	Other 2	Other 3
L3	Other 0	—	—	Host	—	—	—
ℓ1	—	—	Other 0	—	Host	—	—
ℓ2	—	—	Other 0	—	—	Host	—
ℓ3	—	—	Other 0	—	—	—	Host

Point

Monitoring link device B or W

For monitoring devices B and W that are allocated by the link parameter, use the host device number even when designating devices allocated to another station.

Otherwise, the display speed will be reduced.

2.5 Access Range for Monitoring when Connecting FXCPU

GT27 GT25 GT23 GT21 GS25 GS21

The GOT can access only the connected CPU when the direct CPU connection (serial) is used. (The GOT cannot monitor other stations.)

The access range that can be monitored for the Ethernet connection is the host and others.

The access range that can be monitored for the multi-drop communication is only the CPU to which the serial multi-drop connection unit (GT01-RS4-M) is connected directly.

2.6 Connection to Remote I/O Station

GT 27 GT 25 GT 23 GS 25

When connected to the remote I/O station of the MELSECNET/H network system, the GOT can monitor the PLC CPU of the master station.

When connecting the GOT to the remote I/O station, use the following connection methods.

Point

Connection to remote I/O station of MELSECNET/B, (II) or /10

The GOT cannot be connected to the remote I/O station on the MELSECNET/B, (II) data link system and MELSECNET/10 network system.

Connect the GOT to the remote I/O station on the MELSECNET/H network system.

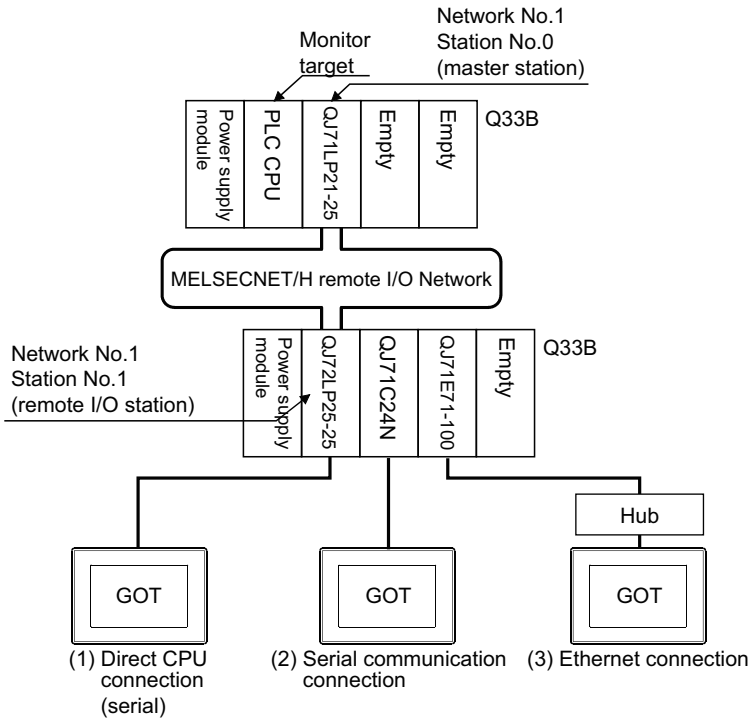

Direct CPU connection (serial)

- The network units (QJ72LP25-25, QJ72LP25G, QP72BR15) of the remote I/O station are handled as PLC CPU.

Connect the GOT to the RS-232 interface of the network unit.

For cables required for connection with the network module and other details, refer to the following.

☞ Page 375 DIRECT CPU CONNECTION (SERIAL)

- Specify MELSEC-Q (including multiple CPU system) or a controller that includes MELSEC-QnU for [Controller Type] in GT Designer3. Then, specify [[NW No.] (Network No. of the remote I/O network) to 1 and [Station No.] (Master station) to 0.] as the monitoring target in the network setting in the device setting dialog. (GT27, GT25, and GS25 only)

The GOT monitors stations on the MELSECNET/H network with the transient transmission.

Therefore, a longer time-lag occurs for displaying objects compared with directly monitoring the PLC CPU.

For displaying objects with a shorter time-lag, execute the cyclic transmission so that the GOT can monitor link devices B and W of the host station set in the MELSECNET/H network.

For settings required for the PLC CPU, refer to the following manual.

📖Q Corresponding MELSECNET/H Network System Reference Manual (Remote I/Q network)

- To monitor other networks, set the routing parameter to the PLC CPU as necessary. For routing parameter settings of the PLC CPU, refer to the following manual.

📖Q corresponding MELSECNET/H Network System Reference Manual (PLC to PLC network)

Serial communication connection

- Connect the GOT to the serial communication module (QJ71C24, QJ71C24-R2, QJ71C24N, QJ71C24N-R2, QJ71C24N-R4) or modem interface module (QJ71CMO) mounted on the remote I/O station.

For the cables required for connection with the serial communication module or modem interface module and other details, refer to the following.

☞ Page 439 SERIAL COMMUNICATION CONNECTION

- Specify MELSEC-Q (including multiple CPU system) or a controller that includes MELSEC-QnU for [Controller Type] in GT Designer3. Then, specify [[NW No.] (Network No. of the remote I/O network) to 1 and [Station No.] (Master station) to 0.] as the monitoring target in the network setting in the device setting dialog. (GT27, GT25, and GS25 only)

The GOT monitors stations on the MELSECNET/H network with the transient transmission.

Therefore, a longer time-lag occurs for displaying objects compared with directly monitoring the PLC CPU.

For displaying objects with a shorter time-lag, execute the cyclic transmission so that the GOT can monitor link devices B and W of the host station set in the MELSECNET/H network.

For settings required for the PLC CPU, refer to the following manual.

📖Q Corresponding MELSECNET/H Network System Reference Manual (Remote I/Q network)

- To monitor other networks, set the routing parameter to the PLC CPU as necessary. For routing parameter settings of the PLC CPU, refer to the following manual.

📖Q corresponding MELSECNET/H Network System Reference Manual (PLC to PLC network)

Ethernet connection

- Connect the GOT to the Ethernet module (QJ71E71-100, QJ71E71-B5, QJ71E71-B2, QJ71E71) mounted on the remote I/O station.

For details of cables and others required for connecting the GOT to the Ethernet module, refer to the following.

☞ Page 217 ETHERNET CONNECTION

- Specify MELSEC-Q (including multiple CPU system) or a controller that includes MELSEC-QnU for [Controller Type] in GT Designer3. Then, specify [[NW No.] (Network No. of the remote I/O network) to 1 and [Station No.] (Master station) to 0.] as the monitoring target in the network setting in the device setting dialog. (GT27, GT25, and GS25 only)

The GOT monitors stations on the MELSECNET/H network with the transient transmission.Therefore, a longer time-lag occurs for displaying objects compared with directly monitoring the PLC CPU.

For displaying objects with a shorter time-lag, execute the cyclic transmission so that the GOT can monitor link devices B and W of the remote I/O station.

For settings required for the PLC CPU, refer to the following manual.

📖Q Corresponding MELSECNET/H Network System Reference Manual (Remote I/Q network)

- To monitor other networks, set the routing parameter to the GOT and PLC CPU as necessary. For routing parameter settings of the GOT, refer to the following manual.

☞ Page 217 ETHERNET CONNECTION

For routing parameter settings of the PLC CPU, refer to the following manual.

📖Q corresponding MELSECNET/H Network System Reference Manual (PLC to PLC network)

Restrictions on connection to remote I/O station

The GOT does not allow the clock of the master station to be set in the clock setting of the utility function.

The master station clock will not change even if the clock setting is made.

Use GX Developer or a similar software to set the PLC CPU clock of the master station.

2.7 Connection to the Head Module

GT 27 GT 25 GT 23 GS 25

When connected to the head module of the CC-Link IE Field Network, the GOT can monitor the PLC CPUs of the master station and local stations.

The serial communication connection and Ethernet connection are available between the GOT and the head module.

The following shows a system configuration example.

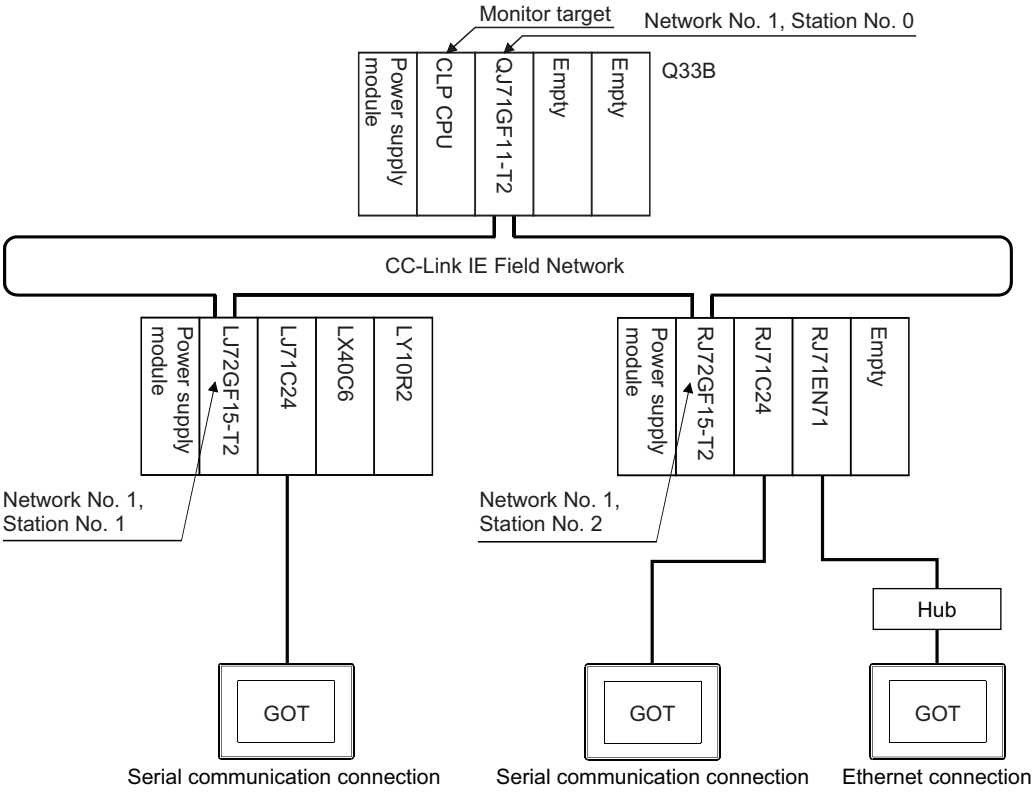

Serial communication connection

- Connect the GOT to the serial communication module (RJ71C24, RJ71C24-R2, RJ71C24-R4, LJ71C24, LJ71C24-R2) mounted on the head module.

For cables required for connection with the serial communication module and other details, refer to the following.

☞ Page 439 SERIAL COMMUNICATION CONNECTION

- Specify MELSEC-Q (including multiple CPU system) or a controller that includes MELSEC-QnU for [Controller Type] in GT Designer3. Then, specify [[NW No.] (Network No. of the remote I/O network) to 1 and [Station No.] (Master station) to 0.] as the monitoring target in the network setting in the device setting dialog. (GT27, GT25, and GS25 only)

In this case, the GOT monitoring is performed by transient transmission of the CC-Link IE Field Network.

Therefore, a longer time-lag occurs for displaying objects compared with directly monitoring the PLC CPU.

For displaying objects with a shorter time-lag, execute the cyclic transmission so that the GOT can monitor link devices B and W of the host station set in the CC-Link IE Field Network.

For settings required for the PLC CPU, refer to the following manual.

📖MELSEC-L CC-Link IE Field Network Head Module User's Manual

📖MELSEC iQ-R CC-Link IE Field Network Remote Head Module User's Manual (Application)

- To monitor other networks, set the routing parameter to the PLC CPU as necessary. For routing parameter setting of the PLC CPU, refer to the following manual.

📖MELSEC-L CC-Link IE Field Network Head Module User's Manual

📖MELSEC iQ-R CC-Link IE Field Network Remote Head Module User's Manual (Application)

Ethernet connection

- Connect the GOT to the Ethernet module (RJ71EN71) mounted on the head module.

For cables required for connection with the serial communication module and other details, refer to the following.

☞ Page 217 ETHERNET CONNECTION

- Specify MELSEC-Q (including multiple CPU system) or a controller that includes MELSEC-QnU for [Controller Type] in GT Designer3. Then, specify [[NW No.] (Network No. of the remote I/O network) to 1 and [Station No.] (Master station) to 0.] as the monitoring target in the network setting in the device setting dialog. (GT27, GT25, and GS25 only)

In this case, the GOT monitoring is performed by transient transmission of the CC-Link IE Field Network.

Therefore, a longer time-lag occurs for displaying objects compared with directly monitoring the PLC CPU.

For displaying objects with a shorter time-lag, execute the cyclic transmission so that the GOT can monitor link devices B and W of the host station set in the CC-Link IE Field Network.

For settings required for the PLC CPU, refer to the following manual.

📖MELSEC iQ-R CC-Link IE Field Network Remote Head Module User's Manual (Application)

- To monitor other networks, set the routing parameter to the GOT and PLC CPU as necessary. For routing parameter settings of the GOT, refer to the following manual.

☞ Page 217 ETHERNET CONNECTION

For routing parameter settings of the PLC CPU, refer to the following manual.

📖MELSEC iQ-R CC-Link IE Field Network Remote Head Module User's Manual (Application)

Restrictions on connection to head module

The GOT does not allow the clock of the master station to be set in the clock setting of the utility function.

The master station clock will not change even if the clock setting is made.

Use GX Works or similar software to set the PLC CPU clock of the master station.

MEMO

3 HOW TO MONITOR REDUNTANT SYSTEM

- Page 117 MELSEC iQ-R Series
- Page 175 MELSEC Q Series
- Page 215 MELSEC Redundant Setting

GT 27 GT 25 GT 23 GS 25

3.1 MELSEC iQ-R Series

This section explains the restrictions on the connection methods and other information applicable when the RCPU redundant system is monitored by the GOT.

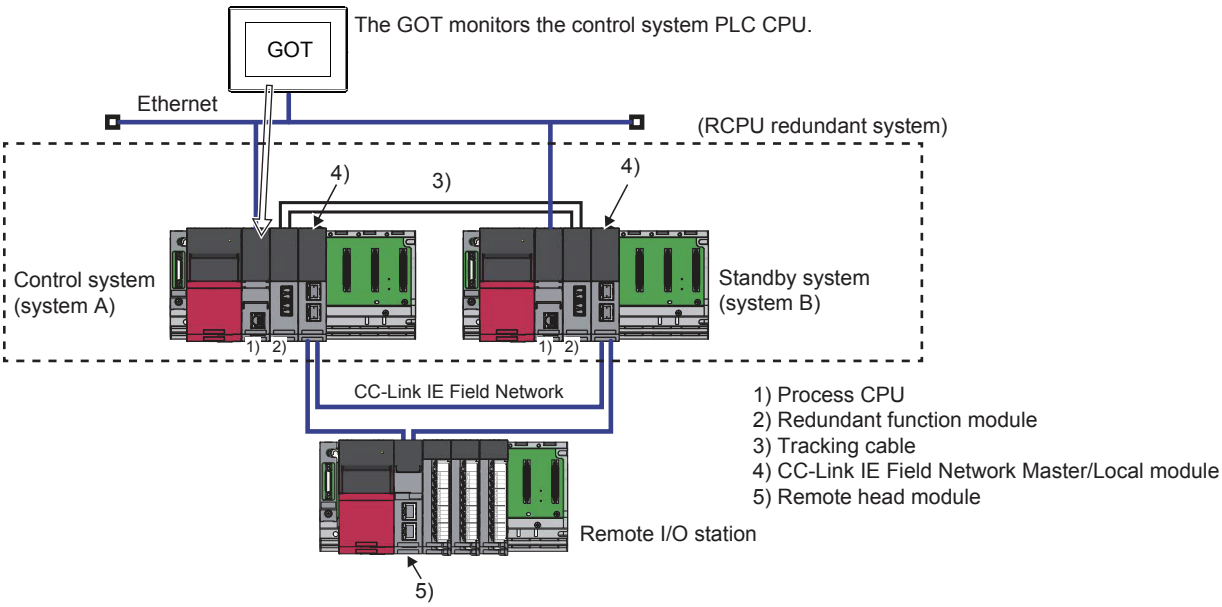

When an error occurs in System A, System B switches from standby system to control system.

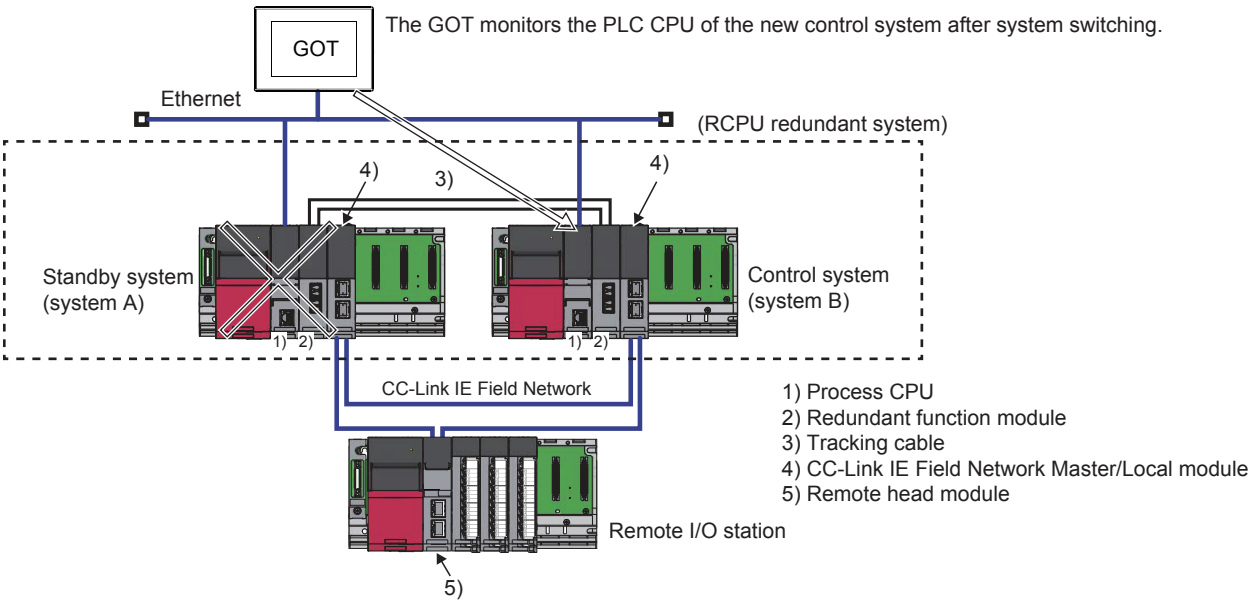

Point

Module configuration when using the SIL2 Process CPU (RnPSFCPU)

To configure the redundant system of the SIL2 Process CPU (RnPSFCPU), mount the SIL2 function module (R6PSFM) and redundant function module (R6RFM) next to the SIL2 Process CPU on the base unit.

When mounting these modules on the base unit, mount them in the order of the SIL2 Process CPU, SIL2 function module, and redundant function module.

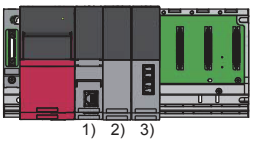

1) SIL2 Process CPU (RnPSFCPU)
2) SIL2 function module (R6PSFM)
3) Redundant function module (R6RFM)

In a redundant system, the monitoring can be performed with the monitoring target specified as the control system or the standby system on the GOT. By specifying the monitoring target PLC CPU as the control system of the redundant system, the monitoring target is automatically changed to the PLC CPU in the control system when system switching occurs.

To enable this automatic changing of the monitoring target at the GOT, settings are required in the GT Designer3.

☞ Page 215 MELSEC Redundant Setting

The following connection methods are available for the RCPU redundant system.

☞ Page 119 Connection to built-in Ethernet port CPU
☞ Page 125 Connection to Ethernet module
☞ Page 132 Connection to CC-Link IE Controller Network
☞ Page 137 Connection to CC-Link IE Field Network
☞ Page 142 Connection to Remote I/O Station in CC-Link IE Field Network
☞ Page 165 Connection to CC-Link (intelligent device station)
☞ Page 168 When connecting via the serial communication unit

Connection to built-in Ethernet port CPU

☞ Page 119 One-to-one connection of GOT and redundant system
☞ Page 121 1:n connection with redundant system
☞ Page 123 For mixed connection of redundant system and Non-redundant system

One-to-one connection of GOT and redundant system

■System configuration example

The following connection configuration examples are explained.

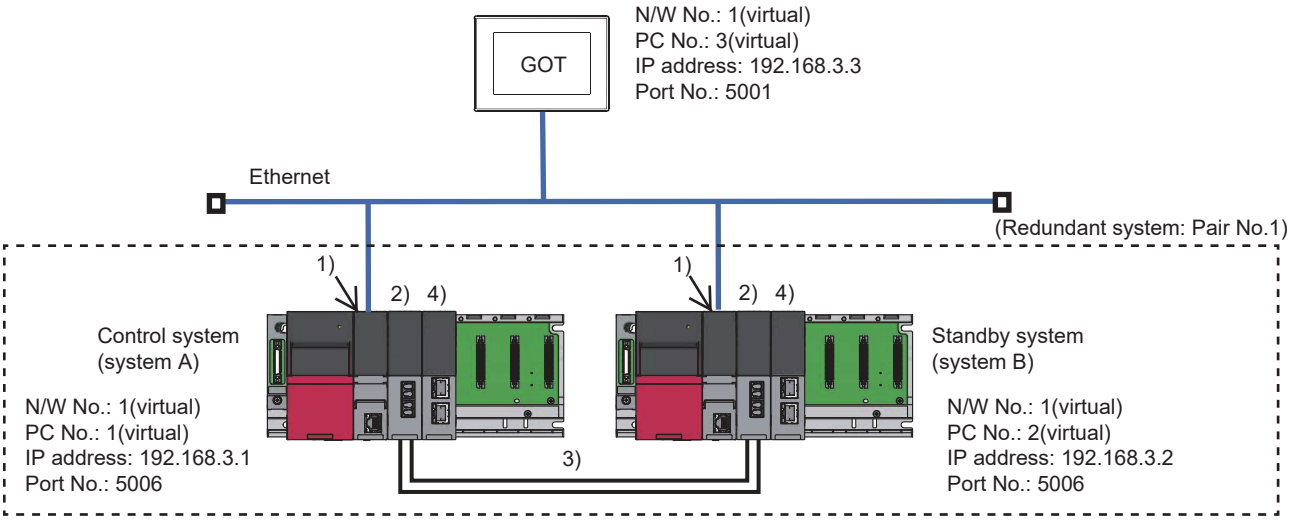

1) Process CPU
2) Redundant function module
3) Tracking cable
4) CC-Link IE Field Network Master/Local module

■Connection method

Connect the built-in Ethernet port CPU to the GOT.

☞ Page 217 ETHERNET CONNECTION

■PLC Side Setting

- Control system (system A) PLC setting (GX Works3)

Built-in Ethernet port

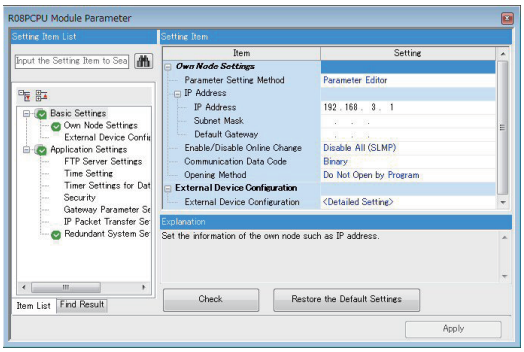

Item	Set value
IP address setting	192.168.3.1
Subnet Mask	-
Default Gateway	-
Online Program Change Permission/Protection Setting	(Use default value)
Communication Data Code	
Open Method Setting	
Target Device Connection Configuration Setting	-

• Standby system (system B) PLC setting (GX Works3)

Redundant Setting

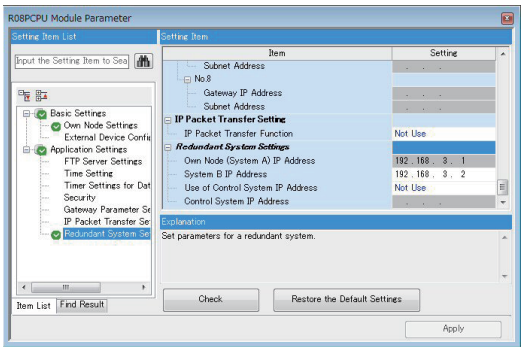

Item	Set value
System B IP Address	192.168.3.2
Control system IP address availability	Not Use

Point

[Control system IP address availability] setting

Set [Control system IP address availability] to [Not use] (default).

If set to [Use], the GOT will not follow the system switching.

■GOT Side Settings

Set GT Designer3 as follows.

Setting item	Contents of setting		Model
Controller Type	MELSEC iQ-R, RnMT/NC/RT, CR800-D		GT 27 GT 25 GT 23 GS 25
Device setting (Network setting)	Host	Host (The control system is monitored.)	
	Other	NW No.: Network No. of Ethernet	
		Station No.: Station number of the control system	
	Control system/ standby system	The system (control system/standby system) of the the monitor target can be speified. Only when checking [Enable Redundant Function] in the following [MELSEC Redundant System Setting], [Control System/Standby System] can be set.	
Connected Ethernet Controller Setting	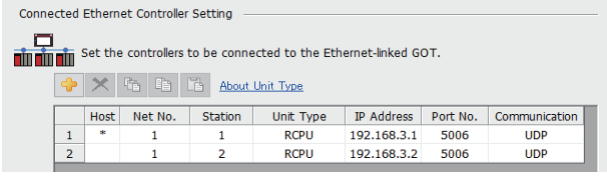 ☞ Page 217 ETHERNET CONNECTION		
MELSEC Redundant Setting	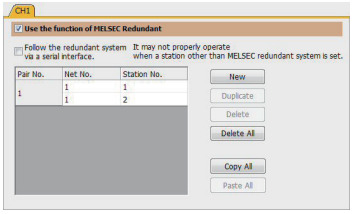 ☞ Page 215 MELSEC Redundant Setting		

■Monitoring target change when system switching occurs in a redundant system

When the system switching occurs, CPU (PLC station No.: 2) takes over the control of the Ethernet network system as the control system.

The GOT automatically starts monitoring accroding to the specified system.

1:n connection with redundant system

■System configuration example

The following connection configuration examples are explained.

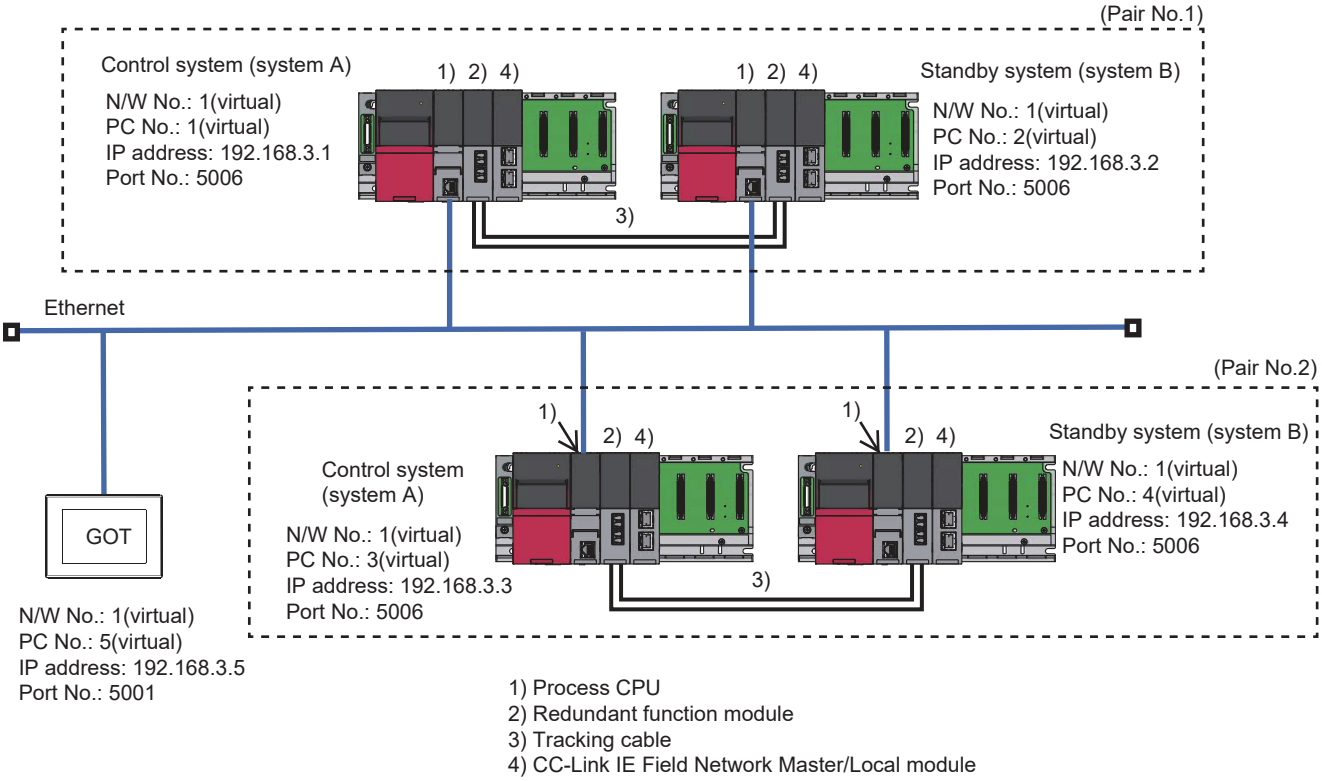

1) Process CPU
2) Redundant function module
3) Tracking cable
4) CC-Link IE Field Network Master/Local module

■Connection method

Connect the Ethernet network system to the GOT.

☞ Page 217 ETHERNET CONNECTION

■PLC Side Setting

☞ Page 119 PLC Side Setting

■GOT Side Settings

Set GT Designer3 as follows.

Setting item	Contents of setting		Model
Controller Type	MELSEC iQ-R, RnMT/NC/RT, CR800-D		GT 27 GT 25 GT 23 GS 25
Device setting (Network setting)	Host	Host (The control system is monitored.)	
	Other	NW No.: 1	
		Station No.: Station number of the control system	
	Control system/ standby system	The system (control system/standby system) of the the monitor target can be speified. Only when checking [Enable Redundant Function] in the following [MELSEC Redundant System Setting], [Control System/Standby System] can be set.	
Connected Ethernet Controller Setting	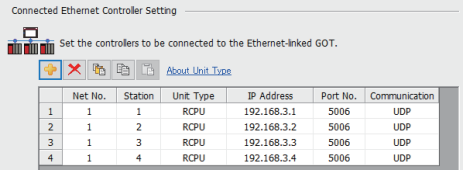 ☞ Page 217 ETHERNET CONNECTION		
MELSEC Redundant Setting	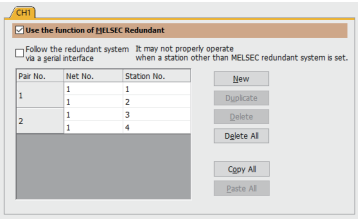 ☞ Page 215 MELSEC Redundant Setting		

■Monitoring target change when system switching occurs in a redundant system

- Redundant system-1

When the system switching occurs, CPU (PLC station No.: 2) takes over the control of the Ethernet network system as the control system.

The GOT automatically starts monitoring accroding to the specified system.

- Redundant system-2

When the system switching occurs, CPU (PLC station No.: 4) takes over the control of the Ethernet network system as the control system.

The GOT automatically starts monitoring accroding to the specified system.

For mixed connection of redundant system and Non-redundant system

■System configuration example

The following connection configuration examples are explained.

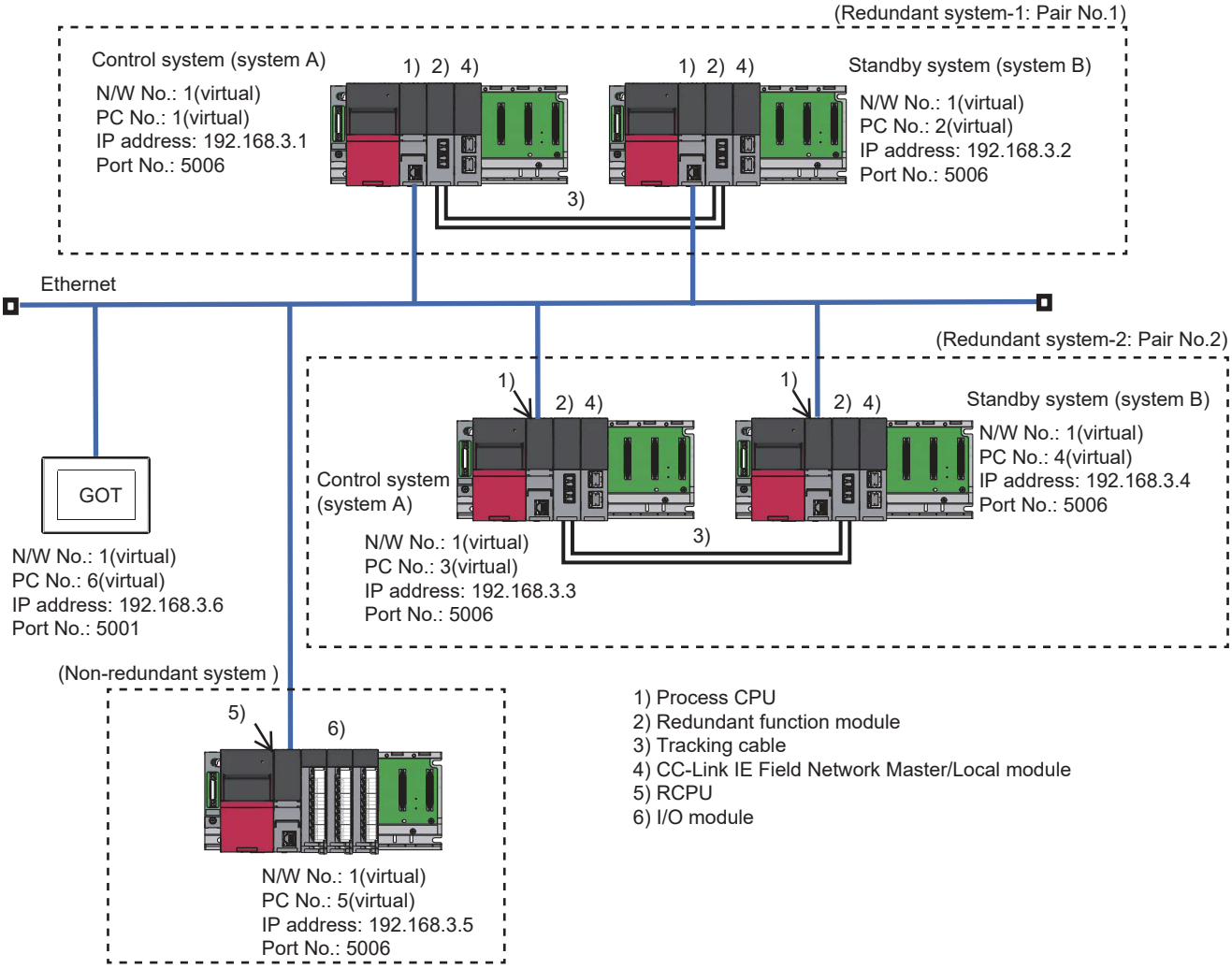

■Connection method

Connect the Ethernet network system to the GOT.

☞ Page 217 ETHERNET CONNECTION

■PLC Side Setting

☞ Page 119 PLC Side Setting

■GOT Side Settings

Set GT Designer3 as follows.

Setting item	Contents of setting		Model
Controller Type	MELSEC iQ-R, RnMT/NC/RT, CR800-D		GT 27 GT 25 GT 23 GS 25
Device setting (Network setting)	Host	Host (The control system is monitored.)	
	Other	NW No.: 1	
		Station No.: Station number of the control system	
	Control system/ standby system	The system (control system/standby system) of the the monitor target can be speified. Only when checking [Enable Redundant Function] in the following [MELSEC Redundant System Setting], [Control System/Standby System] can be set.	
Connected Ethernet Controller Setting	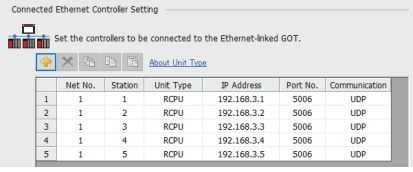 ☞ Page 217 ETHERNET CONNECTION		
MELSEC Redundant Setting	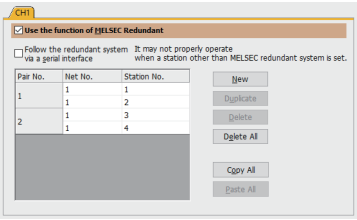 ☞ Page 215 MELSEC Redundant Setting		

■Monitoring target change when system switching occurs in a redundant system

☞ Page 122 Monitoring target change when system switching occurs in a redundant system

Connection to Ethernet module

☞ Page 125 One-to-one connection of GOT and redundant system
☞ Page 128 1:n connection of GOT and redundant system
☞ Page 130 For mixed connection of redundant system and Non-redundant system

One-to-one connection of GOT and redundant system

■System configuration example

The following connection configuration examples are explained.

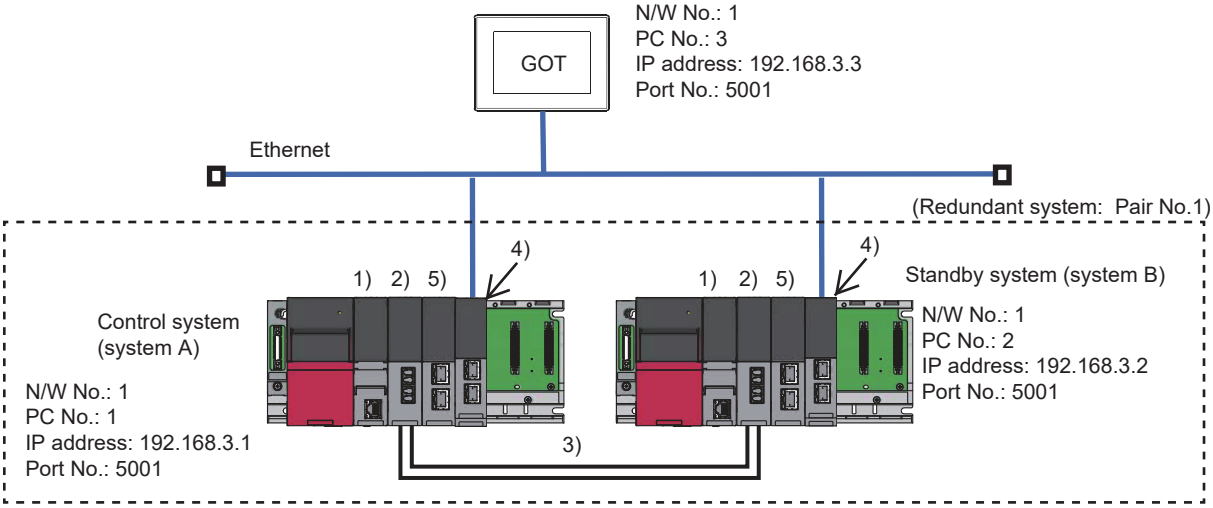

1) Process CPU
2) Redundant function module
3) Tracking cable
4) Ethernet module
5) CC-Link IE Field Network Master/Local module

■Connection method

Connect the built-in Ethernet port CPU to the GOT.

☞ Page 217 ETHERNET CONNECTION

■PLC Side Setting (GX Works3)

- Control system (system A) PLC setting

Module parameter setting of Ethernet module

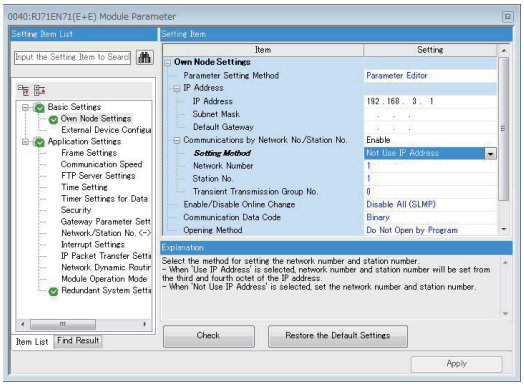

Item	Set value
IP address setting	192.168.3.1
Subnet Mask	-
Default Gateway	-
Setting Method of Network No. and Station No.	Do Not Use IP Address
Network No.	1
Station No.	1
Transient Transmission Group No.	(Use default value)
Online Program Change Permission/Protection Setting	
Communication Data Code	
Open Method Setting	
Target Device Connection Configuration Setting	-

- Standby system (system B) PLC setting (GX Works3)

Redundant Setting

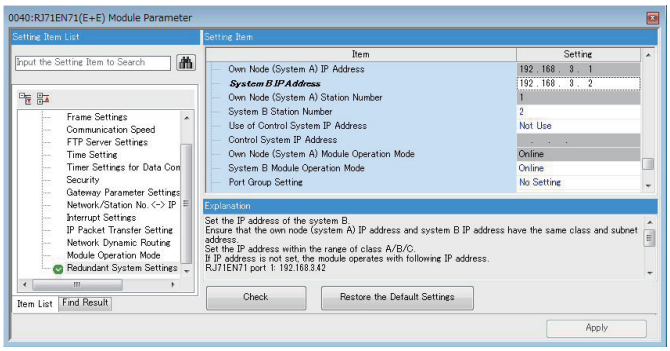

Item	Set value
System B IP Address	192.168.3.2
Control system IP address availability	2
B system module operation mode	Online mode
Control system IP address availability	Not Use

Point

[Control system IP address availability] setting

Set [Control system IP address availability] to [Not use] (default).

If set to [Use], the GOT will not follow the system switching.

■GOT Side Settings

Set GT Designer3 as follows.

Setting item	Contents of setting		Model
Controller Type	MELSEC iQ-R, RnMT/NC/RT, CR800-D		GT27 GT25 GT23 GS25
Device setting (Network setting)	Host	Host (The control system is monitored.)	
	Other	NW No.: Network No. of Ethernet	
		Station No.: Station number of the control system	
	Control system/ standby system	The system (control system/standby system) of the the monitor target can be speified. Only when checking [Enable Redundant Function] in the following [MELSEC Redundant System Setting], [Control System/Standby System] can be set.	
Connected Ethernet Controller Setting	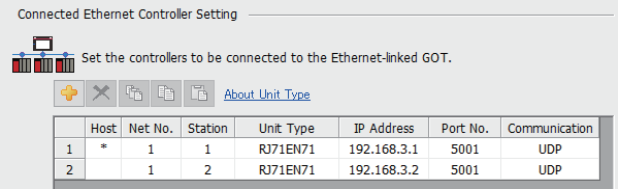 ☞ Page 217 ETHERNET CONNECTION		
MELSEC Redundant Setting	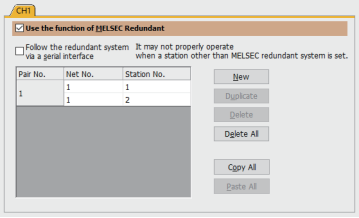 ☞ Page 215 MELSEC Redundant Setting		

■Monitoring target change when system switching occurs in a redundant system

When the system switching occurs, CPU (PLC station No.: 2) takes over the control of the Ethernet network system as the control system.

The GOT automatically starts monitoring accroding to the specified system.

1:n connection of GOT and redundant system

■System configuration example

The following connection configuration examples are explained.

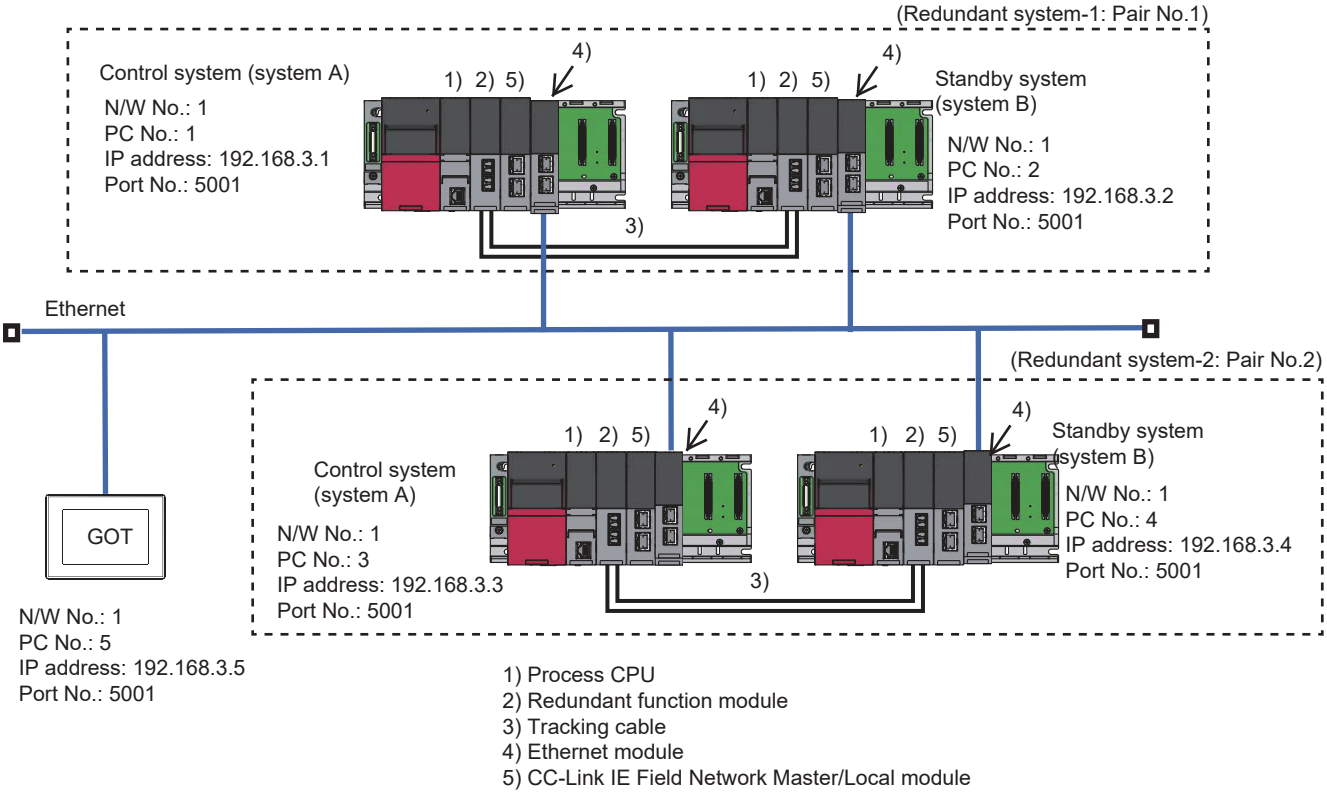

■Connection method

Connect the Ethernet network system to the GOT.

☞ Page 217 ETHERNET CONNECTION

■PLC Side Setting (GX Works3)

☞ Page 126 PLC Side Setting (GX Works3)

■GOT Side Settings

Set GT Designer3 as follows.

Setting item	Contents of setting		Model
Controller Type	MELSEC iQ-R, RnMT/NC/RT, CR800-D		GT 27 GT 25 GT 23 GS 25
Device setting (Network setting)	Host	Host (The control system is monitored.)	
	Other	NW No.: 1	
		Station No.: Station number of the control system	
	Control system/ standby system	The system (control system/standby system) of the the monitor target can be speified. Only when checking [Enable Redundant Function] in the following [MELSEC Redundant System Setting], [Control System/Standby System] can be set.	
Connected Ethernet Controller Setting	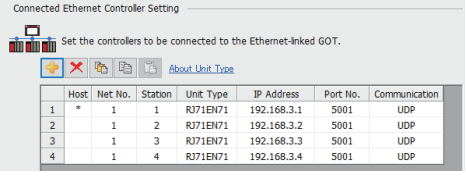 ☞ Page 217 ETHERNET CONNECTION		
MELSEC Redundant Setting	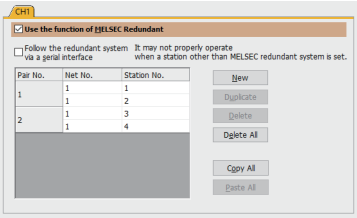 ☞ Page 215 MELSEC Redundant Setting		

■Monitoring target change when system switching occurs in a redundant system

- Redundant system-1

When the system switching occurs, CPU (PLC station No.: 2) takes over the control of the Ethernet network system as the control system.

The GOT automatically starts monitoring accroding to the specified system.

- Redundant system-2

When the system switching occurs, CPU (PLC station No.: 4) takes over the control of the Ethernet network system as the control system.

The GOT automatically starts monitoring accroding to the specified system.

For mixed connection of redundant system and Non-redundant system

■System configuration example

The following connection configuration examples are explained.

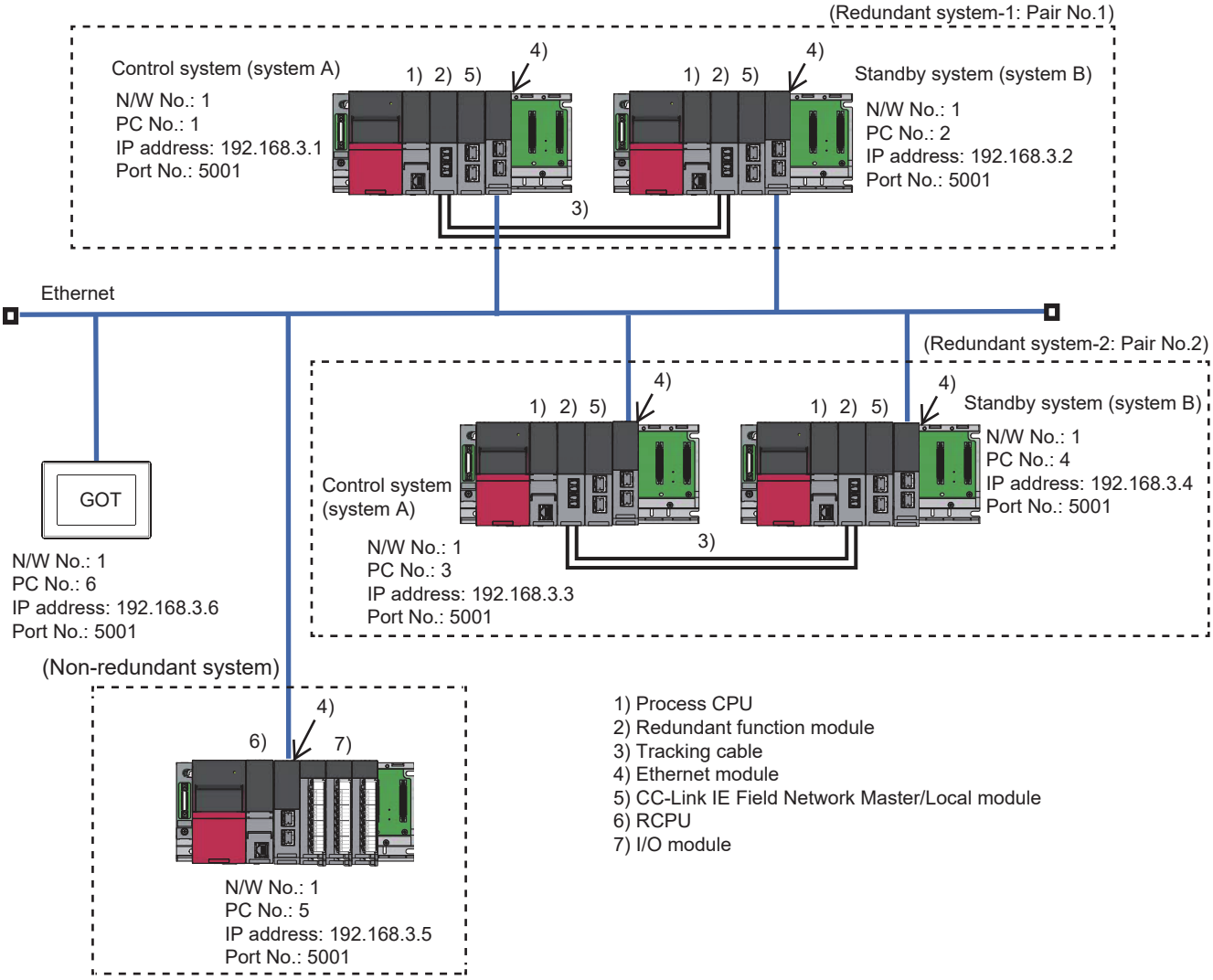

■Connection method

Connect the Ethernet network system to the GOT.

☞ Page 217 ETHERNET CONNECTION

■PLC Side Setting

☞ Page 126 PLC Side Setting (GX Works3)

■GOT Side Settings

Set GT Designer3 as follows.

Setting item	Contents of setting		Model
Controller Type	MELSEC iQ-R, RnMT/NC/RT, CR800-D		GT27 GT25 GT23 GS25
Device setting (Network setting)	Host	Host (The control system is monitored.)	
	Other	NW No.: 1	
		Station No.: Station number of the control system	
	Control system/ standby system	The system (control system/standby system) of the the monitor target can be speified. Only when checking [Enable Redundant Function] in the following [MELSEC Redundant System Setting], [Control System/Standby System] can be set.	
Connected Ethernet Controller Setting	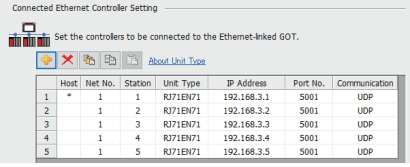 ☞ Page 217 ETHERNET CONNECTION		
MELSEC Redundant Setting	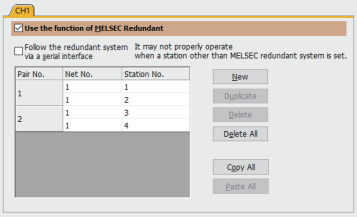 ☞ Page 215 MELSEC Redundant Setting		

■Monitoring target change when system switching occurs in a redundant system

☞ Page 127 Monitoring target change when system switching occurs in a redundant system

Connection to CC-Link IE Controller Network

☞ Page 132 One-to-one connection of GOT and redundant system
☞ Page 135 1:n connection of GOT and redundant system
☞ Page 136 For mixed connection of redundant system and Non-redundant system

One-to-one connection of GOT and redundant system

■System configuration example

The following connection configuration examples are explained.

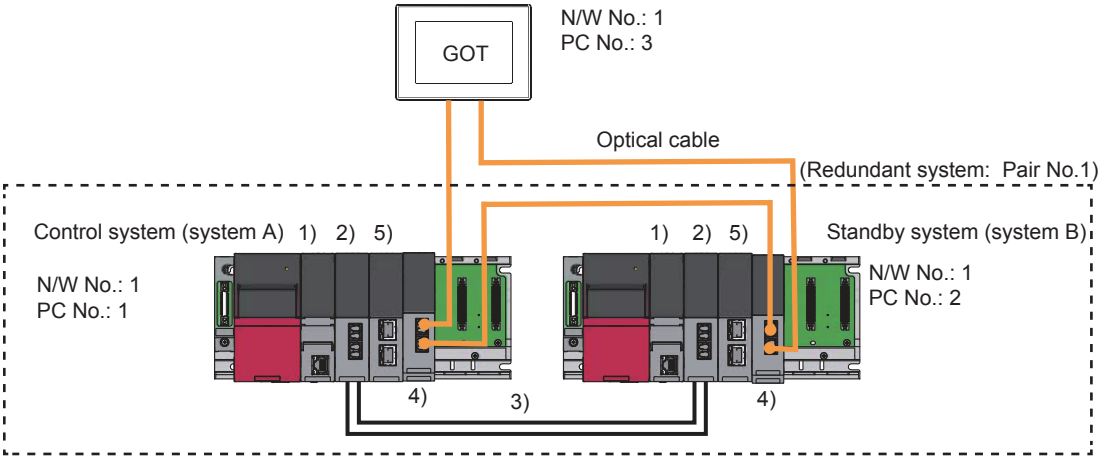

1) Process CPU
2) Redundant function module
3) Tracking cable
4) CC-Link IE Controller Network module
5) CC-Link IE Field Network Master/Local module

■Connection method

Connect the CC-Link IE Controller Network system to the GOT.

☞ Page 625 CC-Link IE CONTROLLER NETWORK CONNECTION

■PLC Side Setting (GX Works3)

- Control system (system A) PLC setting

Module parameter

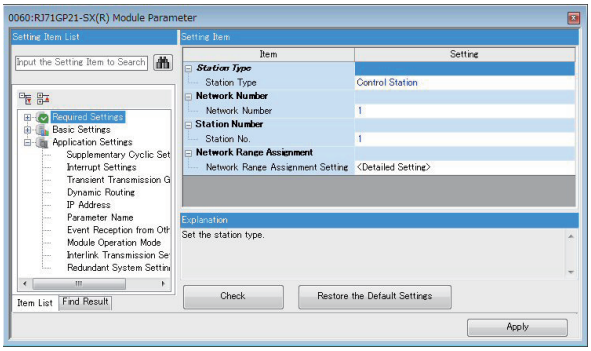

Item	Set value
Station type	Control station (fixed)
Network No.	1
Station number setting	1
Network range assignment	Refer to hereinafter

Network range assignment

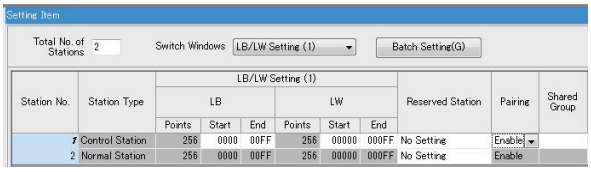

Item	Set value
Pairing	To pair

- Control system (system A) PLC setting

Redundant Setting

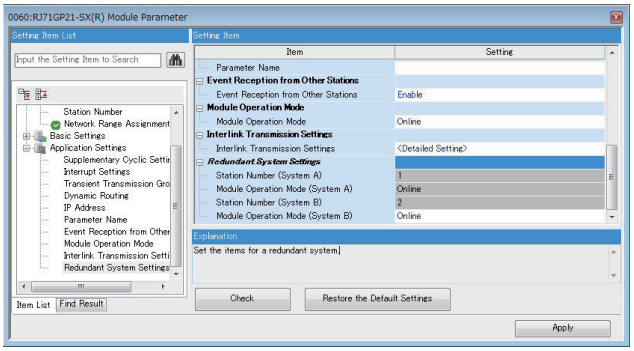

Item	Set value
B system module operation mode	Online mode

■GOT Side Settings

Set GT Designer3 as follows.

Setting item	Contents of setting		Model
Controller Type	MELSEC iQ-R, RnMT/NC/RT, CR800-D		GT 27 GT 25
Device setting (Network setting)	Host	-	
	Other	NW No.: 1	
		Station No.: Station number of the control system	
	Control system/ standby system	The system (control system/standby system) of the the monitor target can be speified. Only when checking [Enable Redundant Function] in the following [MELSEC Redundant System Setting], [Control System/Standby System] can be set.	
MELSEC Redundant Setting	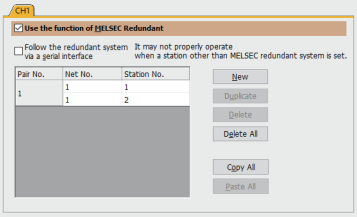 ☞ Page 215 MELSEC Redundant Setting		

■Monitoring target change when system switching occurs in a redundant system

When the system switching occurs, CPU (PLC station No.: 2) takes over the control of the Ethernet network system as the control system.

The GOT automatically starts monitoring accroding to the specified system.

1:n connection of GOT and redundant system

■System configuration example

The following connection configuration examples are explained.

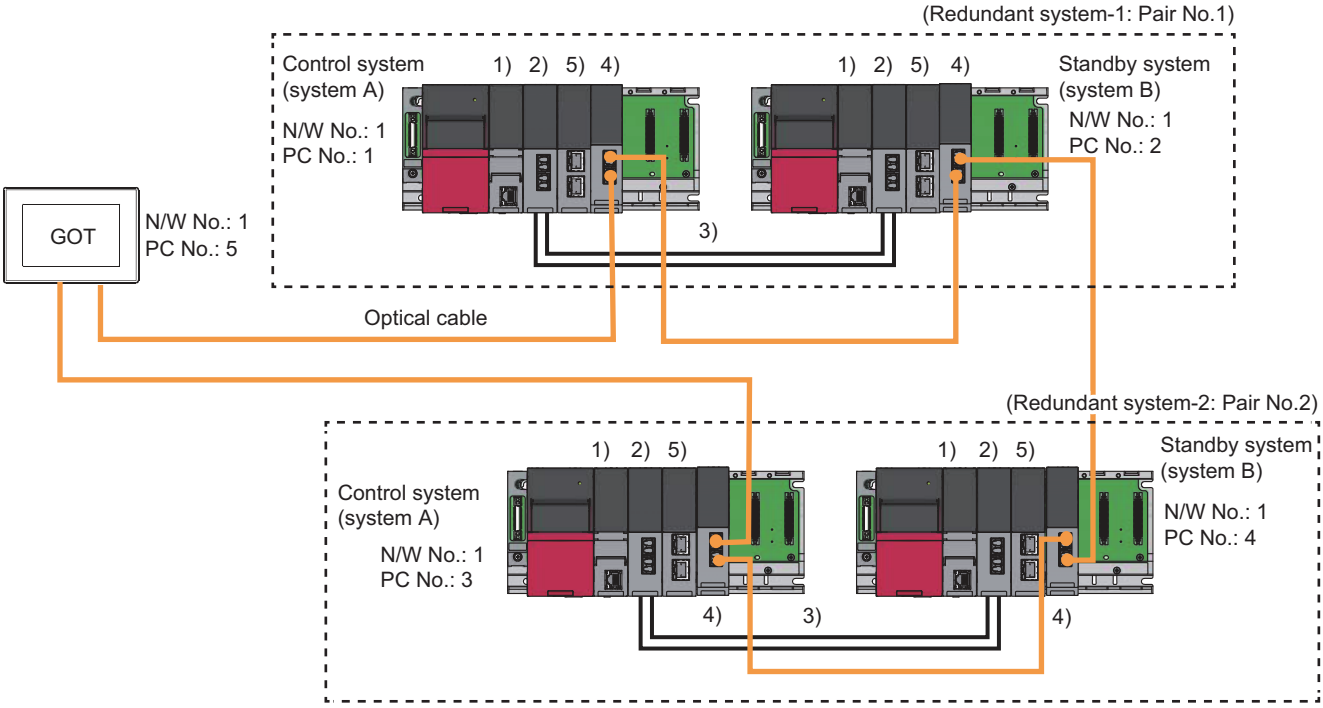

1) Process CPU
2) Redundant function module
3) Tracking cable
4) CC-Link IE Controller Network module
5) CC-Link IE Field Network Master/Local module

■Connection method

Connect the Ethernet network system to the GOT.

☞ Page 625 CC-Link IE CONTROLLER NETWORK CONNECTION

■PLC Side Setting

☞ Page 133 PLC Side Setting (GX Works3)

■GOT Side Settings

Set GT Designer3 as follows.

Setting item	Contents of setting		Model
Controller Type	MELSEC iQ-R, RnMT/NC/RT, CR800-D		GT27 GT25
Device setting (Network setting)	Host	-	
	Other	NW No.: 1	
		Station No.: Station number of the control system	
	Control system/ standby system	The system (control system/standby system) of the the monitor target can be speified. Only when checking [Enable Redundant Function] in the following [MELSEC Redundant System Setting], [Control System/Standby System] can be set.	
MELSEC Redundant Setting	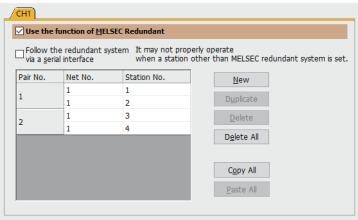 ☞ Page 215 MELSEC Redundant Setting		

■Monitoring target change when system switching occurs in a redundant system

- Redundant system-1

When the system switching occurs, CPU (PLC station No.: 2) takes over the control of the Ethernet network system as the control system.

The GOT automatically starts monitoring accroding to the specified system.

- Redundant system-2

When the system switching occurs, CPU (PLC station No.: 4) takes over the control of the Ethernet network system as the control system.

The GOT automatically starts monitoring accroding to the specified system.

For mixed connection of redundant system and Non-redundant system

■System configuration example

The following connection configuration examples are explained.

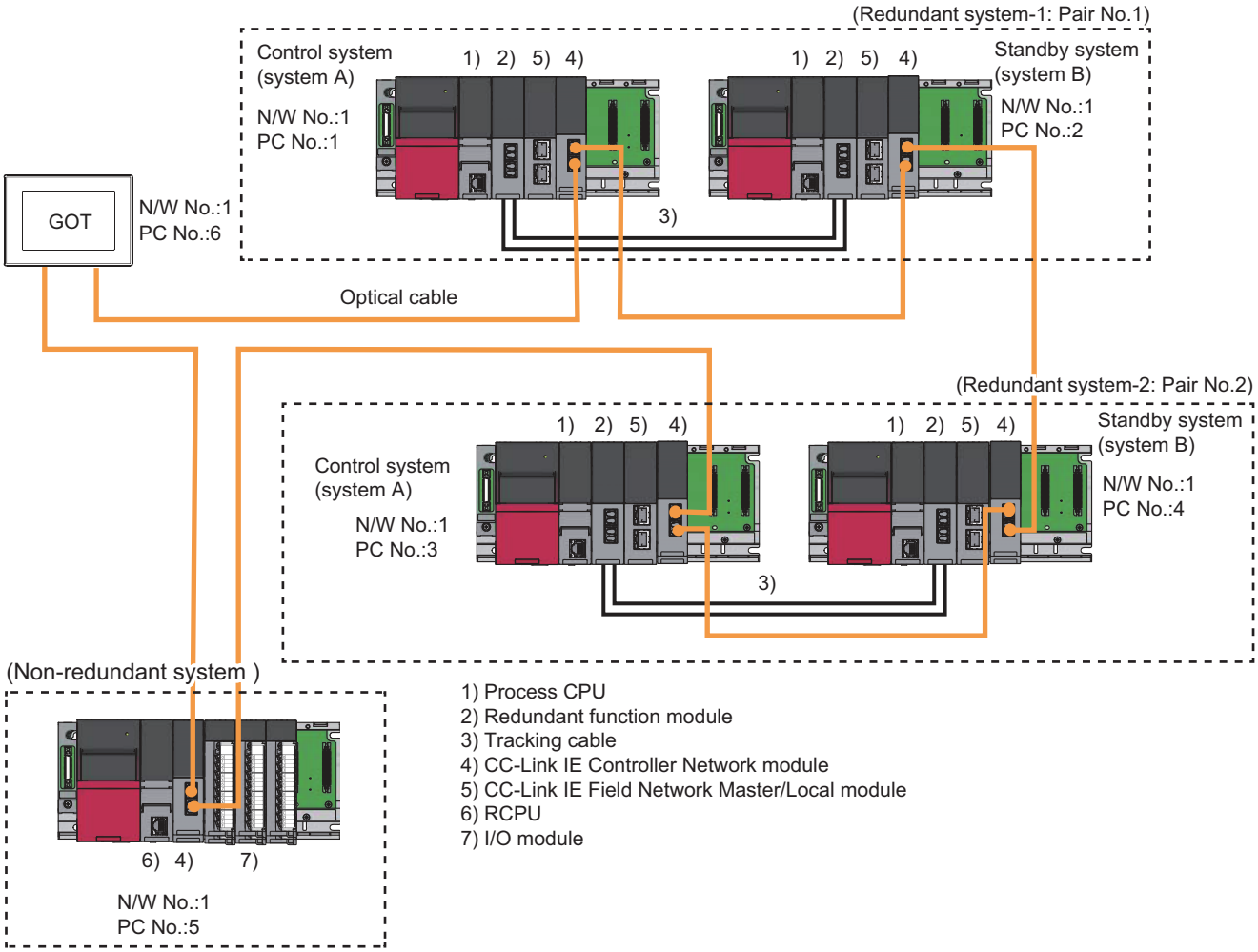

■Connection method

Connect the CC-Link IE Controller Network system to the GOT.

☞ Page 625 CC-Link IE CONTROLLER NETWORK CONNECTION

■PLC Side Setting

☞ Page 133 PLC Side Setting (GX Works3)

■GOT Side Settings

☞ Page 134 GOT Side Settings

■Monitoring target change when system switching occurs in a redundant system

☞ Page 136 Monitoring target change when system switching occurs in a redundant system

Connection to CC-Link IE Field Network

☞ Page 137 One-to-one connection of GOT and redundant system
☞ Page 140 1:n connection of GOT and redundant system
☞ Page 141 For mixed connection of redundant system and Non-redundant system

One-to-one connection of GOT and redundant system

■System configuration example

The following connection configuration examples are explained.

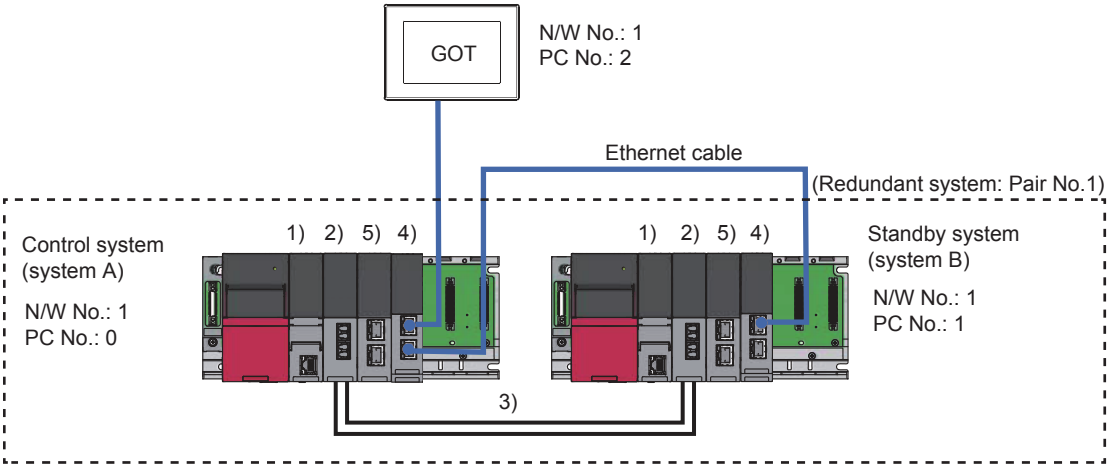

1) Process CPU
2) Redundant function module
3) Tracking cable
4) CC-Link IE Field Network Master/Local module (GOT connection)
5) CC-Link IE Field Network Master/Local module (Remote I/O station connection)

■Connection method

Connect the CC-Link IE Field Network system to the GOT.

☞ Page 665 CC-Link IE FIELD NETWORK CONNECTION

■PLC Side Setting (GX Works3)

- Control system (system A) PLC setting

Module parameter

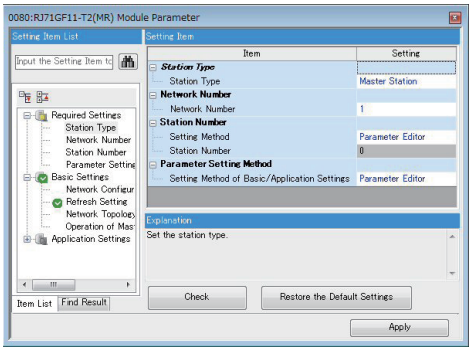

Item	Set value
Station type	Master station (fixed)
Network No.	1
Station number setting	Parameter
Station No.	0 (fixed)
Parameter setting	Engineering tool
Network Configuration Settings	Refer to next page

Network range setting

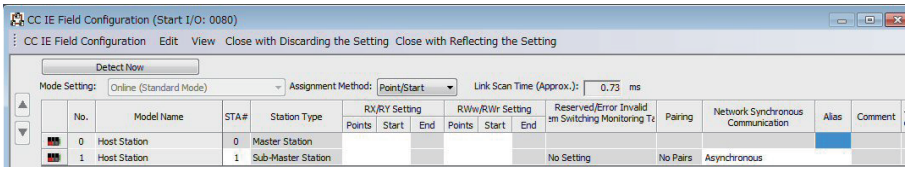

Item	Set value
Sub master station No.	1

- Control system (system A) PLC setting

Redundant Setting

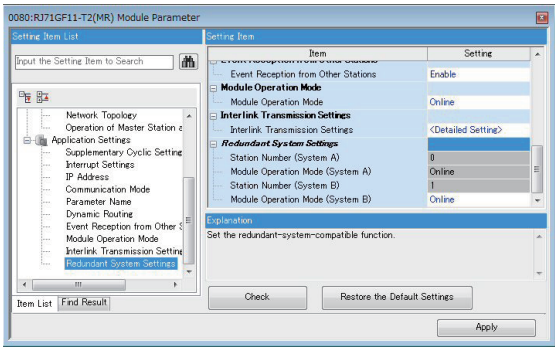

Item	Set value
B system module operation mode	Online mode

■GOT Side Settings

Set GT Designer3 as follows.

Setting item	Contents of setting		Model
Controller Type	MELSEC iQ-R, RnMT/NC/RT, CR800-D		GT 27 GT 25
Device setting (Network setting)	Host	-	
	Other	NW No.: 1	
		Station No.: Station number of the control system	
	Control system/ standby system	The system (control system/standby system) of the the monitor target can be speified. Only when checking [Enable Redundant Function] in the following [MELSEC Redundant System Setting], [Control System/Standby System] can be set.	
MELSEC Redundant Setting	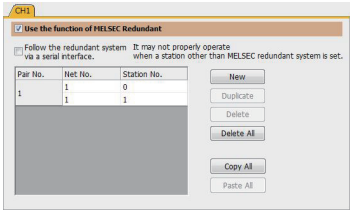 ☞ Page 215 MELSEC Redundant Setting		

■Monitoring target change when system switching occurs in a redundant system

When the system switching occurs, CPU (PLC station No.: 1) takes over the control of the Ethernet network system as the control system.

The GOT automatically starts monitoring accroding to the specified system.

1:n connection of GOT and redundant system

■System configuration example

The following connection configuration examples are explained.

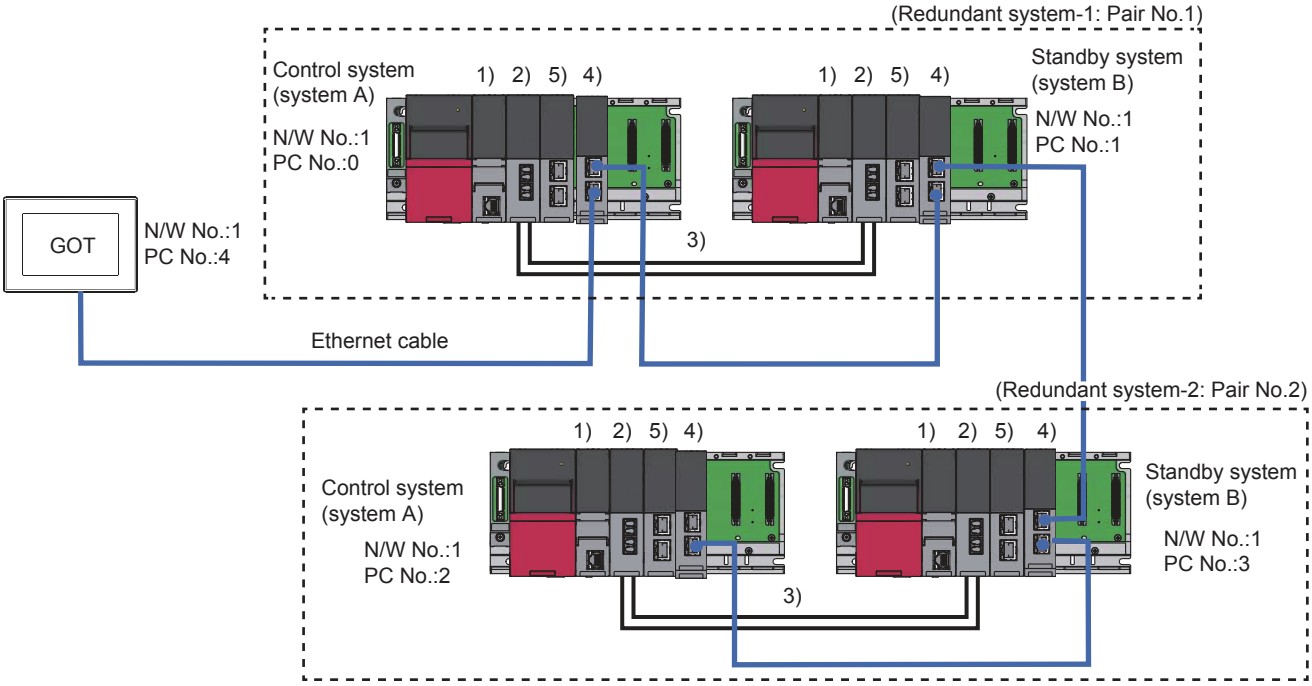

1) Process CPU
2) Redundant function module
3) Tracking cable
4) CC-Link IE Field Network Master/Local module (GOT connection)
5) CC-Link IE Field Network Master/Local module (Remote I/O station connection)

■Connection method

Connect the CC-Link IE Field Network system to the GOT.

☞ Page 665 CC-Link IE FIELD NETWORK CONNECTION

■PLC Side Setting (GX Works3)

☞ Page 138 PLC Side Setting (GX Works3)

■GOT Side Settings

Set GT Designer3 as follows.

Setting item	Contents of setting		Model
Controller Type	MELSEC iQ-R, RnMT/NC/RT, CR800-D		GT 27 GT 25
Device setting (Network setting)	Host	-	
	Other	NW No.: 1	
		Station No.: Station number of the control system	
	Control system/ standby system	The system (control system/standby system) of the the monitor target can be speified. Only when checking [Enable Redundant Function] in the following [MELSEC Redundant System Setting], [Control System/Standby System] can be set.	
MELSEC Redundant Setting	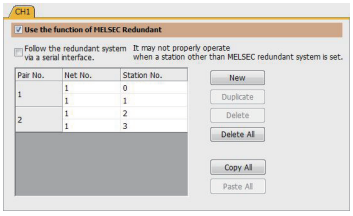 ☞ Page 215 MELSEC Redundant Setting		

■Monitoring target change when system switching occurs in a redundant system

- Redundant system-1

When the system switching occurs, CPU (PLC station No.: 1) takes over the control of the Ethernet network system as the control system.

The GOT automatically starts monitoring accroding to the specified system.

- Redundant system-2

When the system switching occurs, CPU (PLC station No.: 3) takes over the control of the Ethernet network system as the control system.

The GOT automatically starts monitoring accroding to the specified system.

For mixed connection of redundant system and Non-redundant system

■System configuration example

The following connection configuration examples are explained.

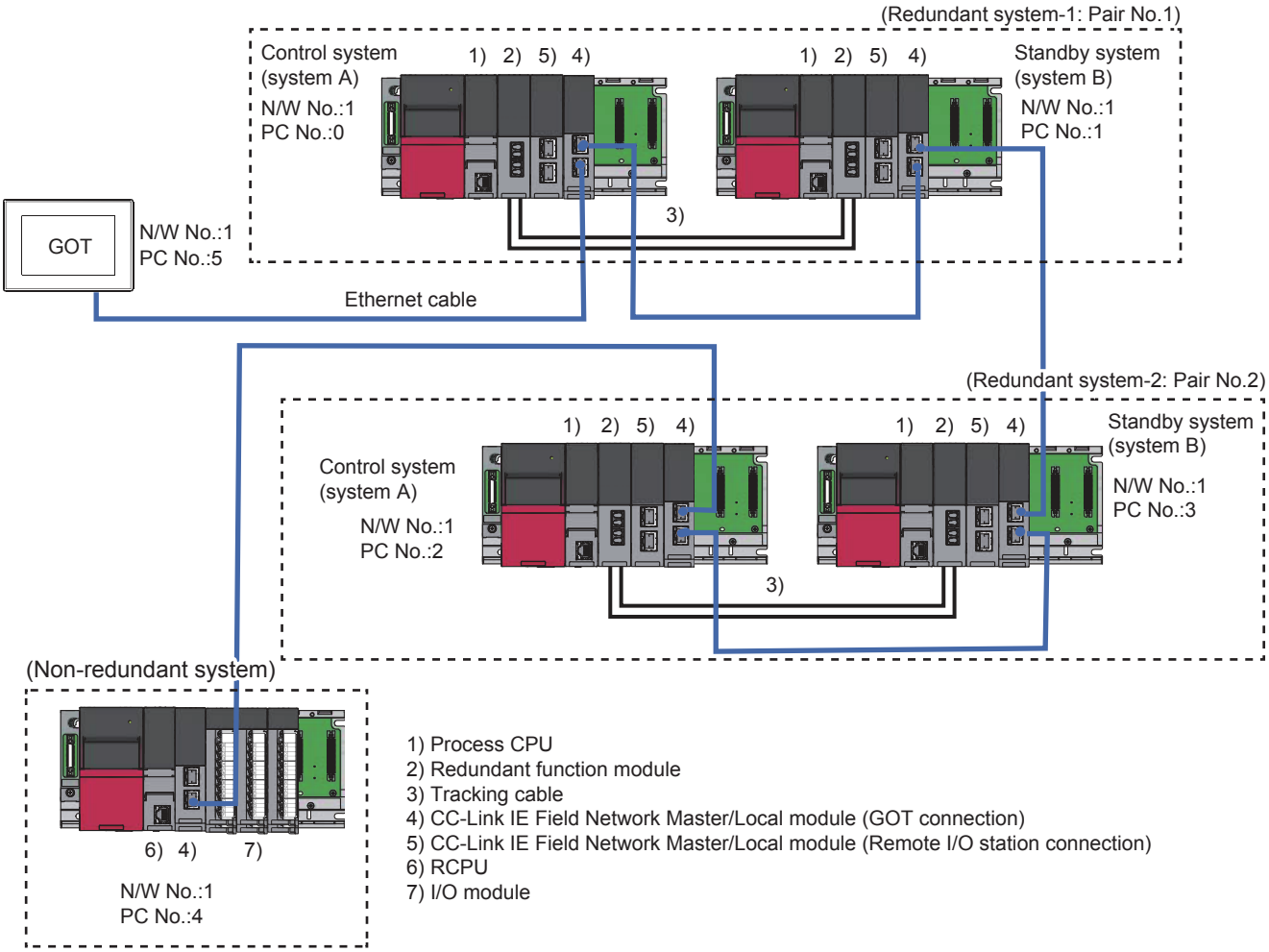

■Connection method

Connect the CC-Link IE Field Network system to the GOT.

☞ Page 665 CC-Link IE FIELD NETWORK CONNECTION

■PLC Side Setting (GX Works3)

☞ Page 138 PLC Side Setting (GX Works3)

■GOT Side Settings

☞ Page 140 GOT Side Settings

■Monitoring target change when system switching occurs in a redundant system

☞ Page 141 Monitoring target change when system switching occurs in a redundant system

Connection to Remote I/O Station in CC-Link IE Field Network

☞ Page 142 Ethernet module (mounted on remote I/O station) connection (Single configuration)
☞ Page 148 Ethernet module (mounted on remote I/O station) connection (Single-line configuration)
☞ Page 153 Ethernet module (mounted on remote I/O station) connection (Double-line configuration)
☞ Page 160 Serial communication module (mounted on remote I/O station) connection (Single configuration)
☞ Page 162 Serial communication module (mounted on remote I/O station) connection (Single-line configuration)
☞ Page 163 Serial communication module (mounted on remote I/O station) connection (Double-line configuration)

Ethernet module (mounted on remote I/O station) connection (Single configuration)

■System configuration example

The following connection example for connecting to the redundant CPU via the remote I/O station connected by Ethernet is explained in this section.

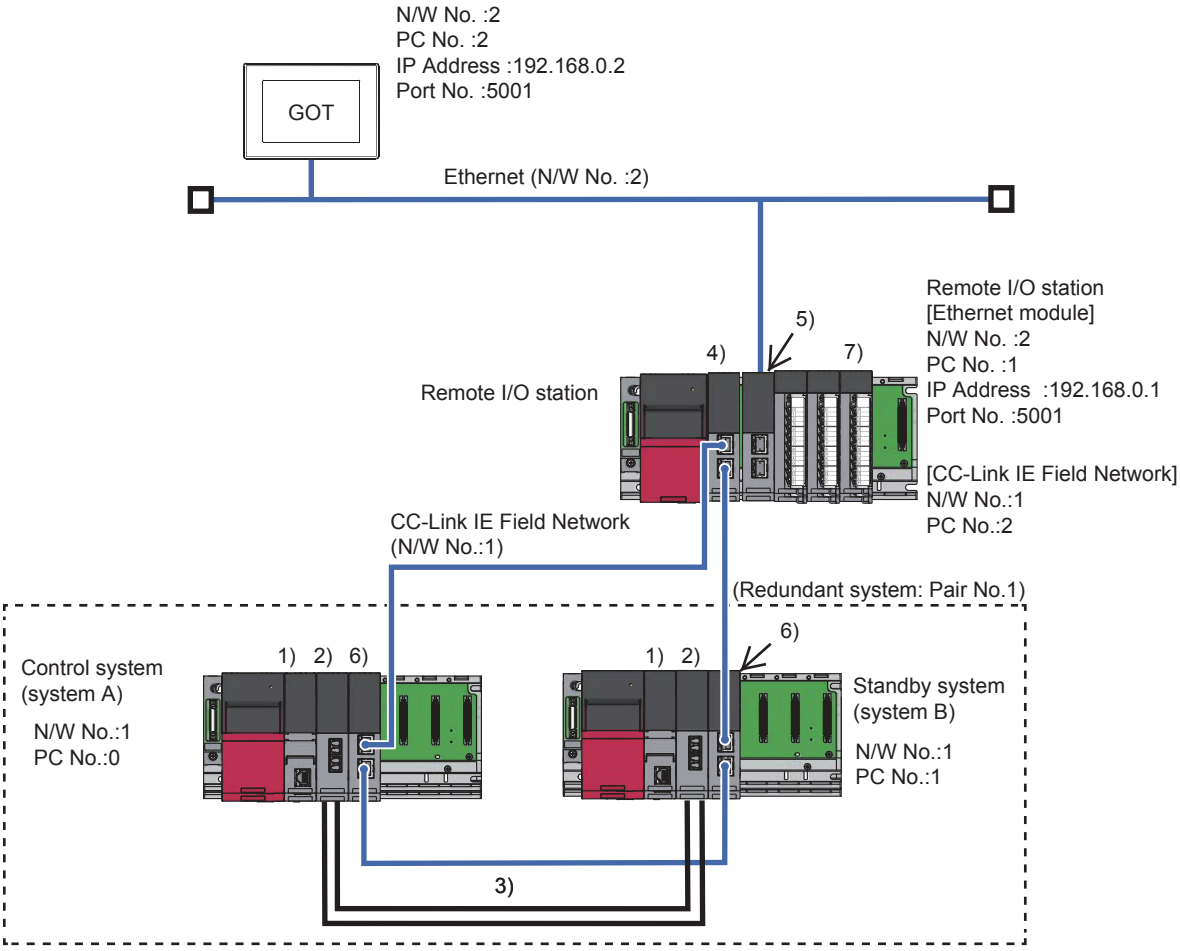

1) Process CPU
2) Redundant function module
3) Tracking cable
4) CC-Link IE Field Network remote head module (RJ72GF15-T2)
5) Ethernet module
6) CC-Link IE Field Network Master/Local module (RJ71GF11-T2(MR))
7) I/O module

■Connection method

Connect the Ethernet module (mounted on remote I/O station) to the GOT.

☞ Page 217 ETHERNET CONNECTION

■PLC Side Setting (GX Works3)

- Redundant CPU (Master station)

1) [Operation mode]

Set to [Redundant].

2) [I/O Assignment]

Set [I/O Assignment] in [System parameter].

At [I/O Assignment], assign the redundant function module (R6RFM) and the CC-Link IE field network module (RJ71GF11-T2(MR)).

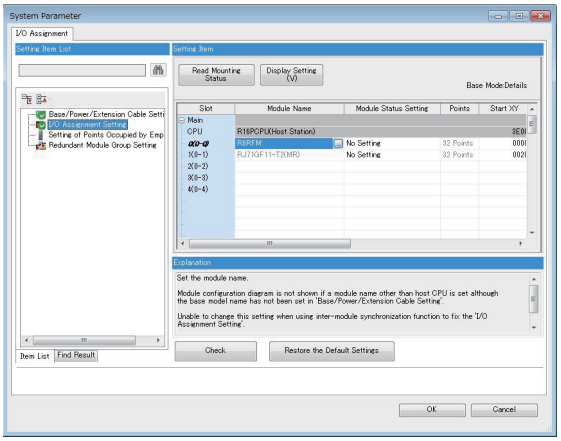

3) [Module Parameter]-[Required Settings]

Set [Module Parameter] of the CC-Link IE field network module (RJ71GF11-T2(MR)).

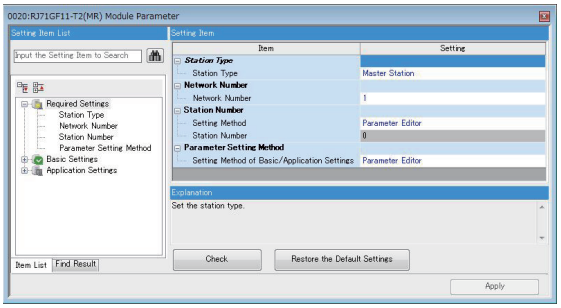

Item	Set value
Station type	Master station (fixed)
Network No.	1
Station number setting	Parameter Editor
Station No.	0 (fixed)
Parameter setting	Parameter Editor (fixed)

4) [Module Parameter]-[Basic Settings]

Set [Module Parameter] of the CC-Link IE field network module (RJ71GF11-T2(MR)).

Set [Network Topology] to [Ring].

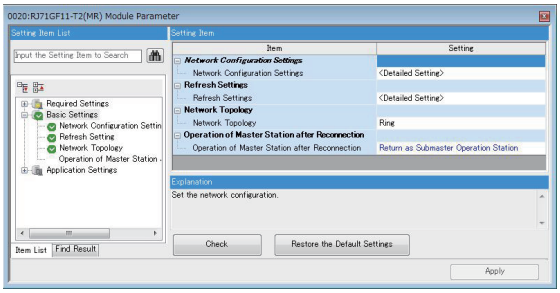

Set [Network Configuration Settings] as follows.

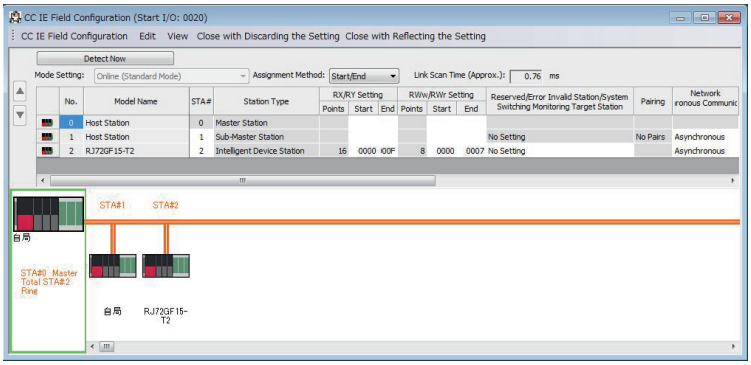

5) [Module Parameter]-[Application Settings]

Set [Module Parameter] of the CC-Link IE field network module (RJ71GF11-T2(MR)).

At [Redundant System Settings] , set [Module Operation Mode] of standby system (system B) to [Online].

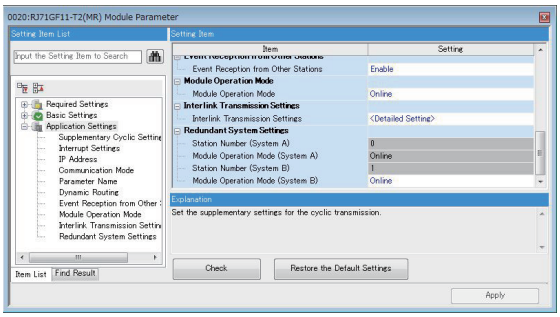

• CC-Link IE Field Network Remote Head Module

1) [Type]

Select [RJ72GF15-T2] for [Type].

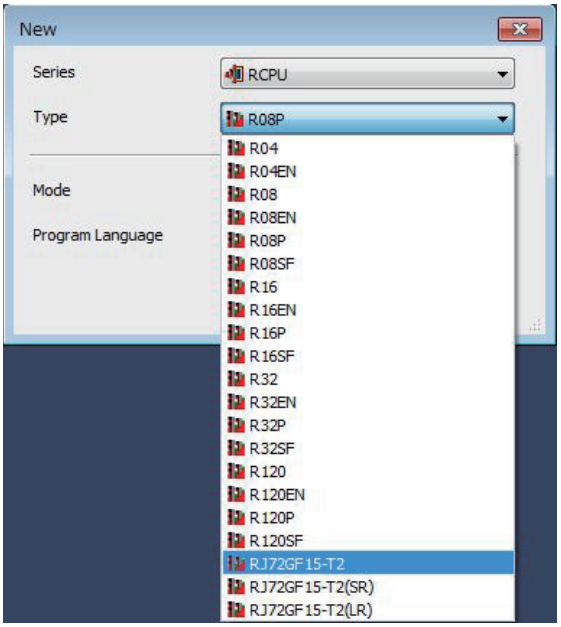

2) [I/O Assignment]

Set [I/O Assignment] in [System parameter].

At [I/O Assignment], assign Ethernet module (RJ71EN71 (E+E) in the following example).

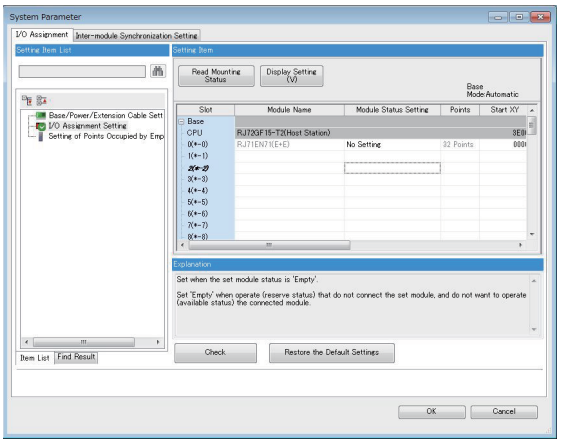

3) [CPU Parameter]

Set the network number and station number of RJ72GF15-T2.

(1) In the system configuration example, the values are as follows.

Network No.: 1

Station No.: 2

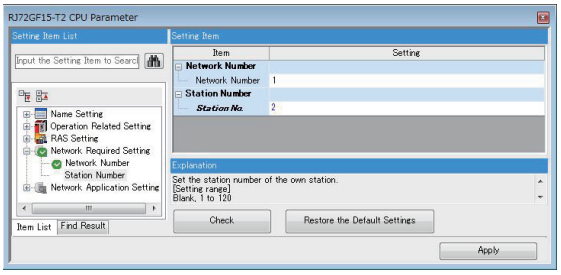

4) Setting of Ethernet module

Set the IP address, Network No., and station number to the port communicating with the GOT in the Ethernet module.

When setting the IP address, Network No., and station number in a batch

Set [Communications by Network No./Station No.] to [Enable] and [Setting Method] to [Use IP Address] so that the third octet of IP address is the network number and the fourth octet is the station number.

(1) In the system configuration example, the network number is 2, and the station number is 1, so the value is as follows.

IP Address: 192.168.2.1

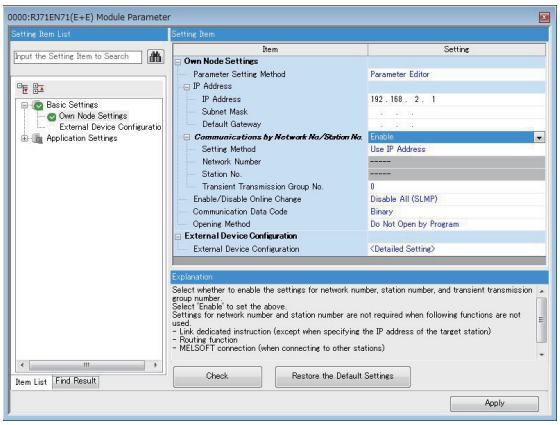

When setting the IP address, Network No., and station number separately

Set [Communications by Network No./Station No.] to [Enable] and [Setting Method] to [Not Use IP Address], and set the IP address, network number, and station number separately.

(1) In the system configuration example, the values are as follows.

IP Address: 192.168.0.1

Network No.: 2

Station No.: 1

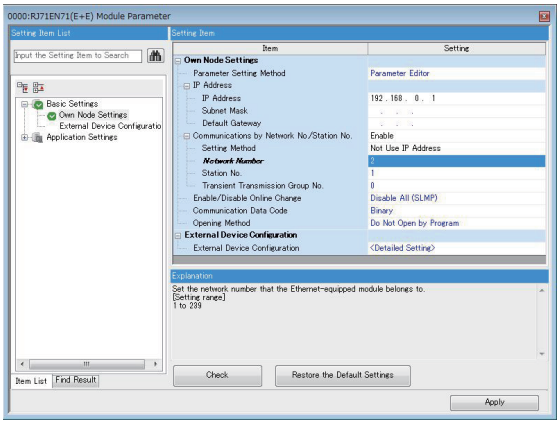

■GOT Side Settings

Set GT Designer3 as follows.

Setting item	Contents of setting		Model
Controller Type	MELSEC iQ-R, RnMT/NC/RT, CR800-D		GT 27 GT 25 GT 23 GS 25
Routing Information	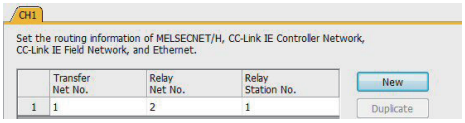 ☞ Page 217 ETHERNET CONNECTION		
Device setting (Network setting)	Host	-	
	Other	Network No. 1	
		Station No.: 0	
	Control system/ standby system	The system (control system/standby system) of the the monitor target can be speified. Only when checking [Enable Redundant Function] in the following [MELSEC Redundant System Setting], [Control System/Standby System] can be set.	
MELSEC Redundant Setting	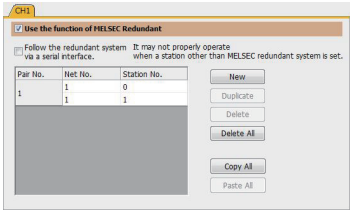 ☞ Page 215 MELSEC Redundant Setting		

■Monitoring target change when system switching occurs in a redundant system

When the system switching occurs, CPU (Network No.: 1, PLC station No.: 1) takes over the control of the Ethernet network system as the control system.

The GOT automatically starts monitoring accroding to the specified system.

Ethernet module (mounted on remote I/O station) connection (Single-line configuration)

■System configuration example

The following connection example for connecting to the redundant CPU via the remote I/O station connected by Ethernet is explained in this section.

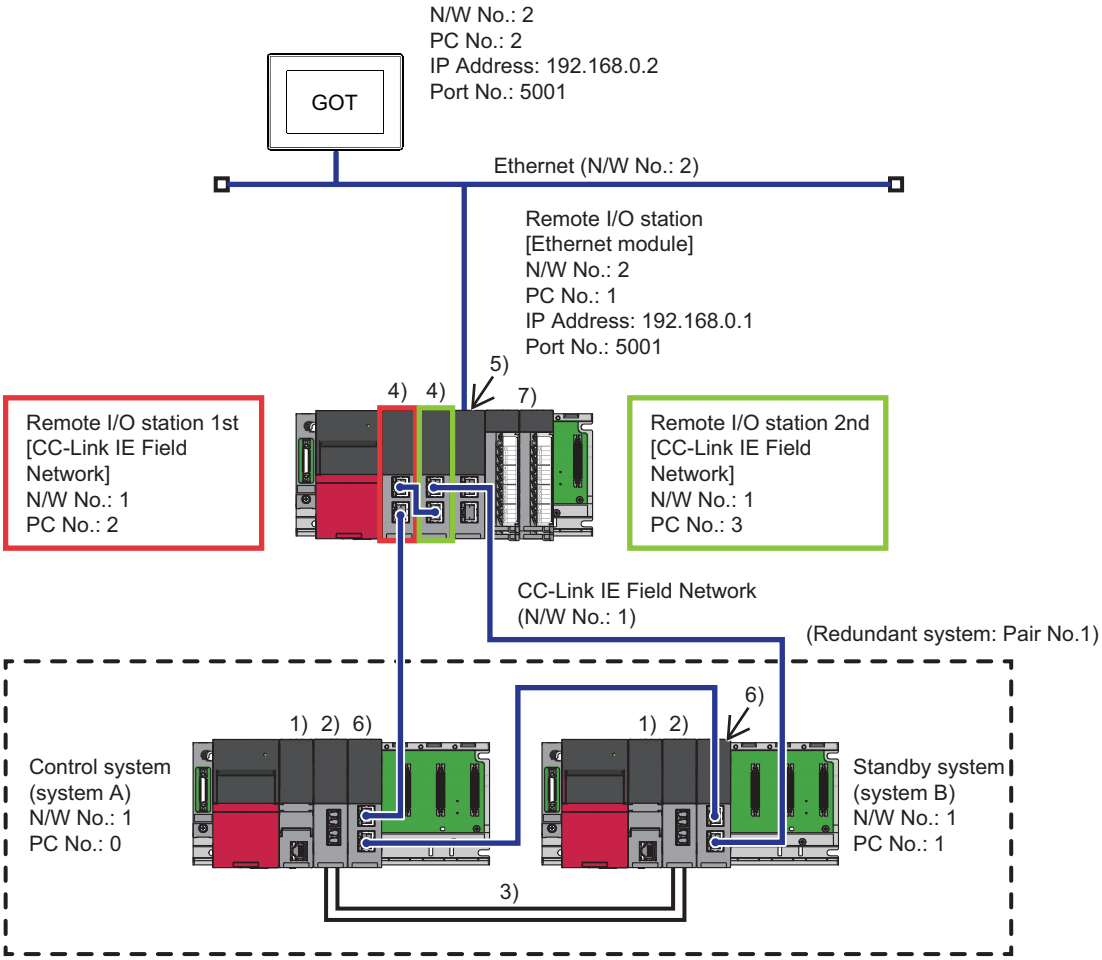

1) Process CPU
2) Redundant function module
3) Tracking cable
4) CC-Link IE Field Network remote head module(RJ72GF15-T2(SR))
5) Ethernet module
6) CC-Link IE Field Network Master/Local module (RJ71GF11-T2(MR))
7) I/O module

■Connection method

Connect the Ethernet module (mounted on remote I/O station) to the GOT.

☞ Page 217 ETHERNET CONNECTION

■PLC Side Setting (GX Works3)

- Redundant CPU (Master station)

1) [Operation mode]

Set to [Redundant].

2) [I/O Assignment]

Set [I/O Assignment] in [System parameter].

At [I/O Assignment], assign the redundant function module (R6RFM) and the CC-Link IE field network module (RJ71GF11-T2(MR)).

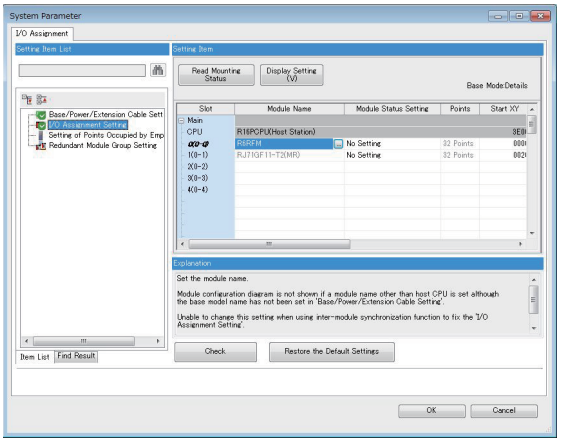

3) [Module Parameter]-[Required Settings]

Set [Module Parameter] of the CC-Link IE field network module (RJ71GF11-T2(MR)).

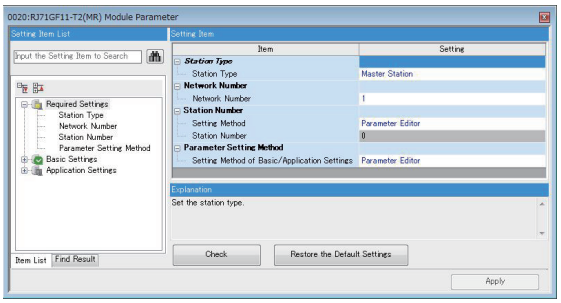

Item	Set value
Station type	Master station (fixed)
Network No.	1
Station number setting	Parameter Editor
Station No.	0 (fixed)
Parameter setting	Parameter Editor (fixed)

4) [Module Parameter]-[Basic Settings]

Set [Module Parameter] of the CC-Link IE field network module (RJ71GF11-T2(MR)).

Set [Network Topology] to [Ring].

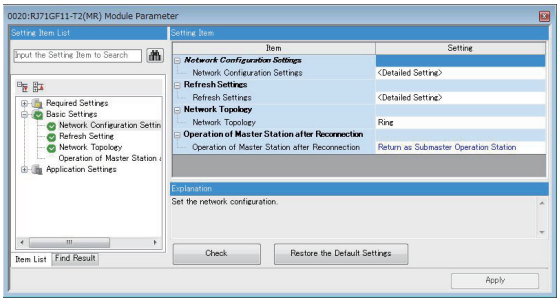

Set [Network Configuration Settings] as follows.

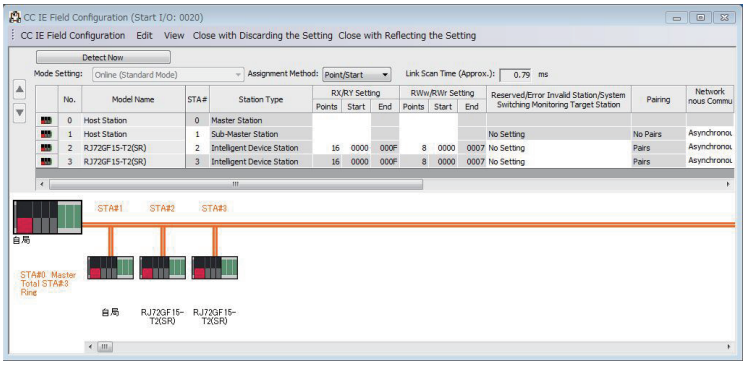

5) [Module Parameter]-[Application Settings]

Set [Module Parameter] of the CC-Link IE field network module (RJ71GF11-T2(MR)).

At [Redundant System Settings] , set [Module Operation Mode] of standby system (system B) to [Online].

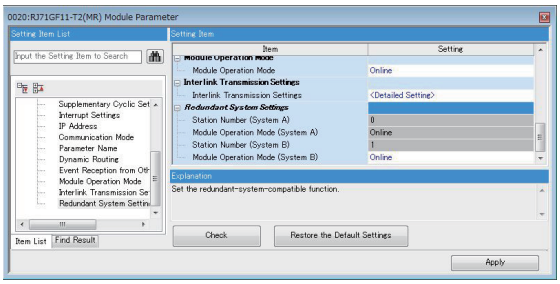

• CC-Link IE Field Network Remote Head Module

1) [Type]

Select [RJ72GF15-T2(SR)] for [Type].

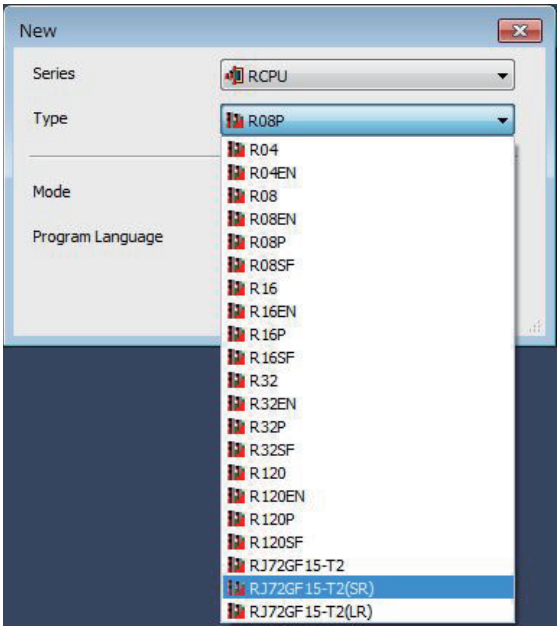

2) [I/O Assignment]

Set [I/O Assignment] in [System parameter].

At [I/O Assignment], assign the following.

• The second RJ72GF15-T2(SR)

• Ethernet module (RJ71EN71 (E+E) in the following example).

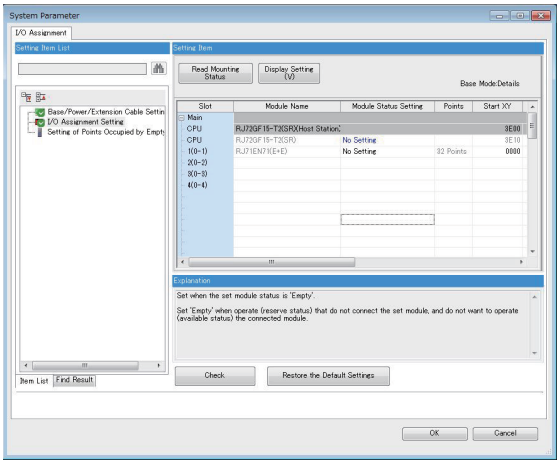

3) [CPU Parameter]

Set the network number and station number of RJ72GF15-T2(SR).

(1) In the system configuration example, the values are as follows.

Network No. : 1

Station No. : 2

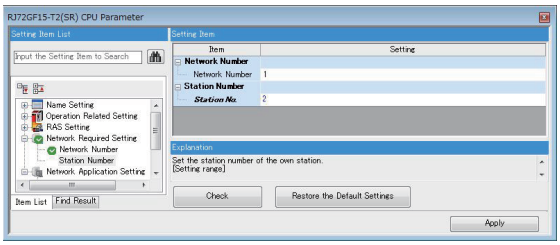

4) Setting of Ethernet module

Set the IP address, Network No., and station number to the port communicating with the GOT in the Ethernet module.

When setting the IP address, Network No., and station number in a batch

Set [Communications by Network No./Station No.] to [Enable] and [Setting Method] to [Use IP Address] so that the third octet of IP address is the network number and the fourth octet is the station number.

(1) In the system configuration example, the network number is 2, and the station number is 1, so the value is as follows.

IP Address: 192.168.2.1

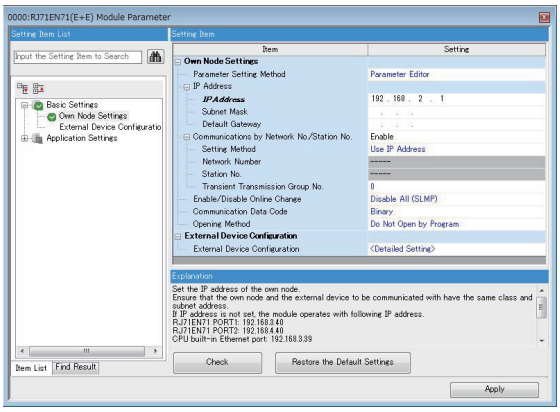

When setting the IP address, Network No., and station number separately

Set [Communications by Network No./Station No.] to [Enable] and [Setting Method] to [Not Use IP Address], and set the the IP address, network number, and station number separately.

(1) In the system configuration example, the values are as follows.

IP Address: 192.168.0.1

Network No.: 2

Station No.: 1

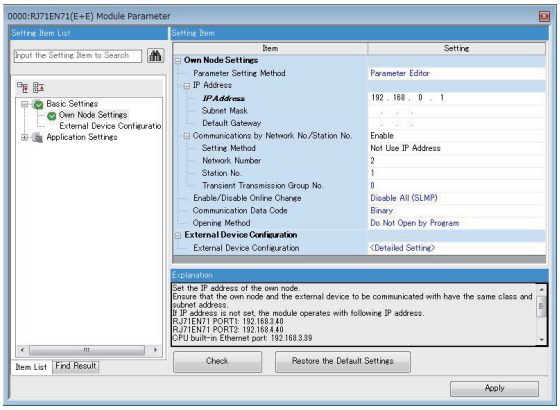

■GOT Side Settings

☞ Page 142 Ethernet module (mounted on remote I/O station) connection (Single configuration)

■Monitoring target change when system switching occurs in a redundant system

When the system switching occurs, CPU (Network No.: 1, PLC station No.: 1) takes over the control of the Ethernet network system as the control system.

The GOT automatically starts monitoring accroding to the specified system.

Ethernet module (mounted on remote I/O station) connection (Double-line configuration)

■System configuration example

The following connection example for connecting to the redundant CPU via the remote I/O station connected by Ethernet is explained in this section.

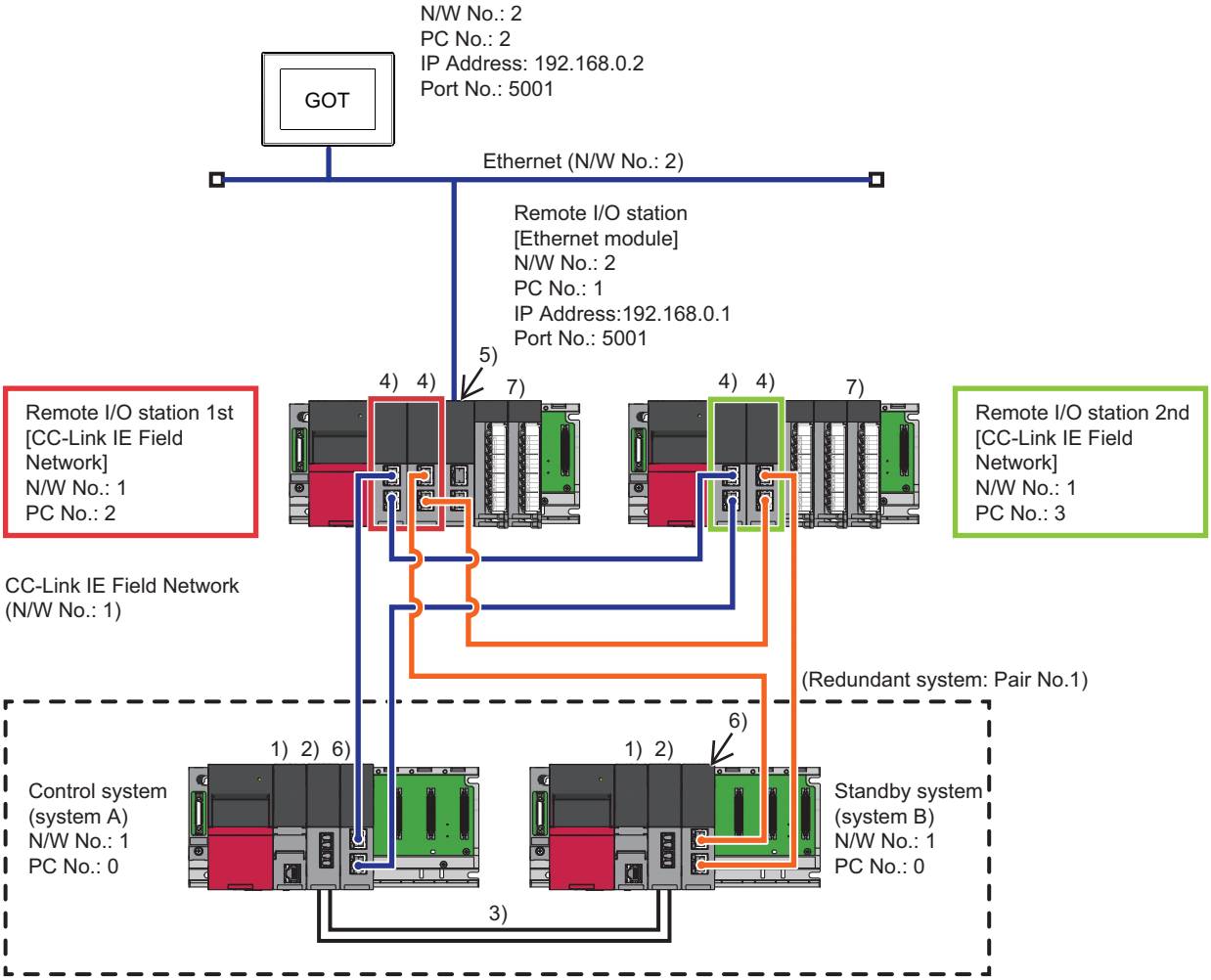

1) Process CPU
2) Redundant function module
3) Tracking cable
4) CC-Link IE Field Network remote head module (RJ72GF15-T2(LR))
5) Ethernet module
6) CC-Link IE Field Network Master/Local module (RJ71GF11-T2(LR))
7) I/O module

■Connection method

Connect the Ethernet module (mounted on remote I/O station) to the GOT.

☞ Page 217 ETHERNET CONNECTION

■PLC Side Setting (GX Works3)

- Redundant CPU (Master station)

1) [Operation mode]

Set to [Redundant].

2) [I/O Assignment]

Set [I/O Assignment] in [System parameter].

At [I/O Assignment], assign the redundant function module (R6RFM) and the CC-Link IE field network module (RJ71GF11-T2(LR)).

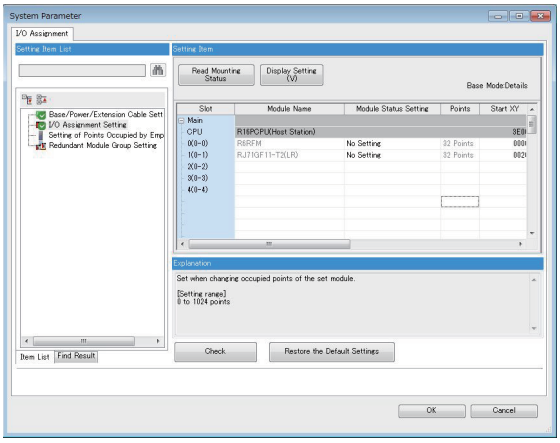

3) [Module Parameter]-[Required Settings]

Set [Module Parameter] of the CC-Link IE field network module (RJ71GF11-T2(LR)).

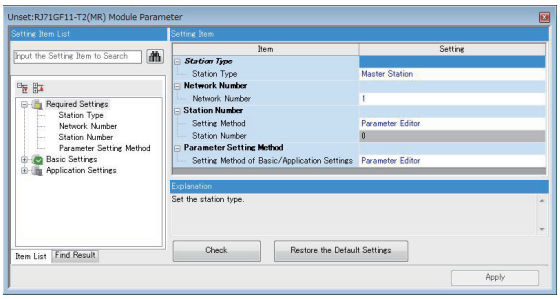

Item	Set value
Station type	Master station (Double-line) (fixed)
Network No.	1
Station number setting	Parameter Editor (fixed)
Station No.	0 (fixed)
Parameter setting	Parameter Editor (fixed)

4) [Module Parameter]-[Basic Settings]

Set [Module Parameter] of the CC-Link IE field network module (RJ71GF11-T2(LR)).

Set [Network Topology] to [Ring].

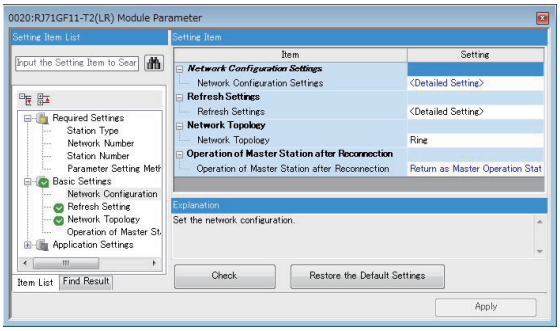

Set [Network Configuration Settings] as follows.

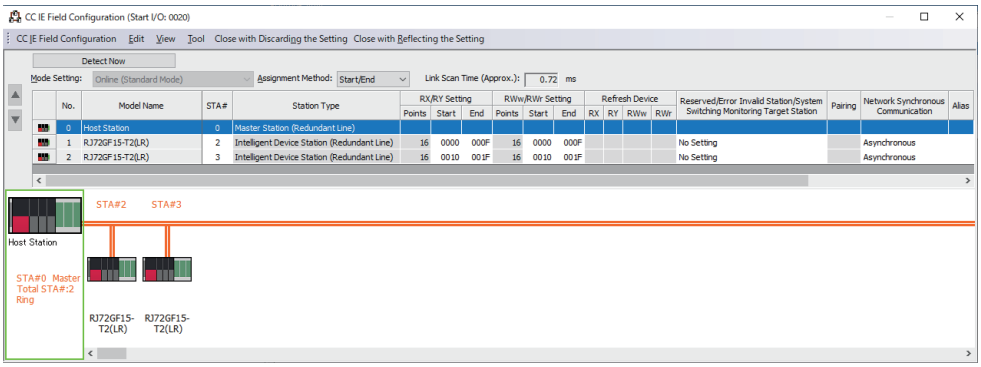

5) [Module Parameter]-[Application Settings]

Set [Module Parameter] of the CC-Link IE field network module (RJ71GF11-T2(LR)).

At [Redundant System Settings], set [Module Operation Mode] of standby system (system B) to [Online].

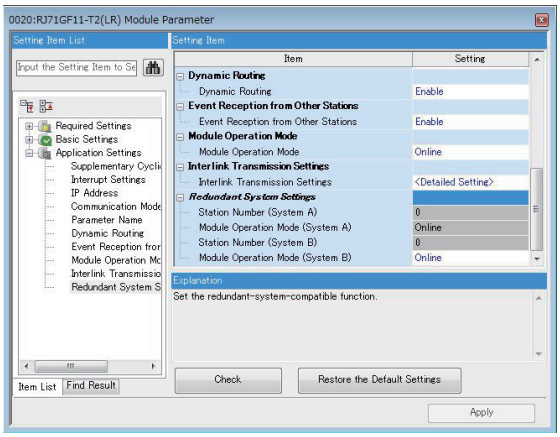

• CC-Link IE Field Network Remote Head Module (1st)

1) [Type]

Select [RJ72GF15-T2(LR)] for [Type].

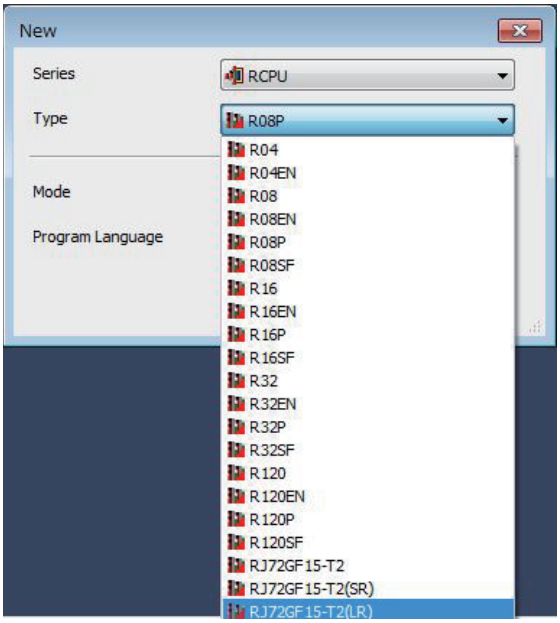

2) [I/O Assignment]

Set [I/O Assignment] in [System parameter].

At [I/O Assignment], assign the following.

• RJ72GF15-T2(LR)

• Ethernet module (RJ71EN71 (E+E) in the following example).

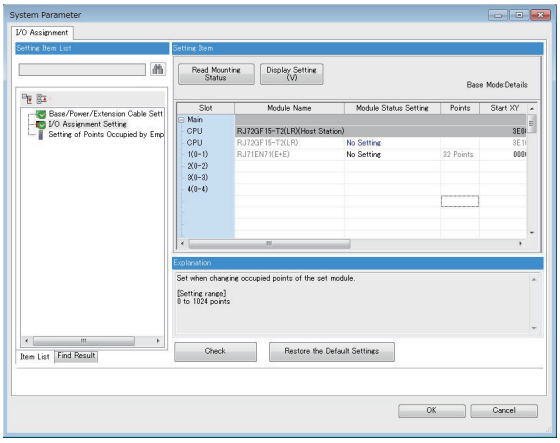

3) [CPU Parameter]

Set the network number and station number of RJ72GF15-T2(LR).

(1) In the system configuration example, the values are as follows.

Network No. : 1

Station No. : 2

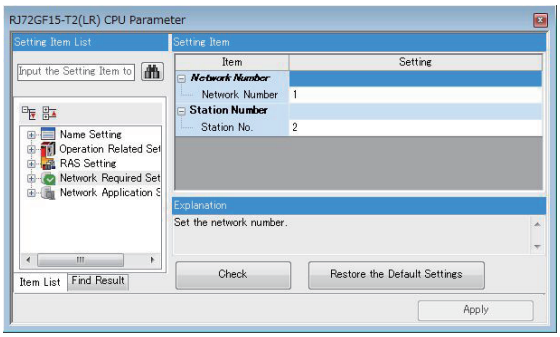

4) Setting of Ethernet module

Set the IP address, Network No., and station number to the port communicating with the GOT in the Ethernet module.

When setting the IP address, Network No., and station number in a batch

Set [Communications by Network No./Station No.] to [Enable] and [Setting Method] to [Use IP Address] so that the third octet of IP address is the network number and the fourth octet is the station number.

(1) In the system configuration example, the network number is 2, and the station number is 1, so the value is as follows.

IP Address : 192.168.2.1

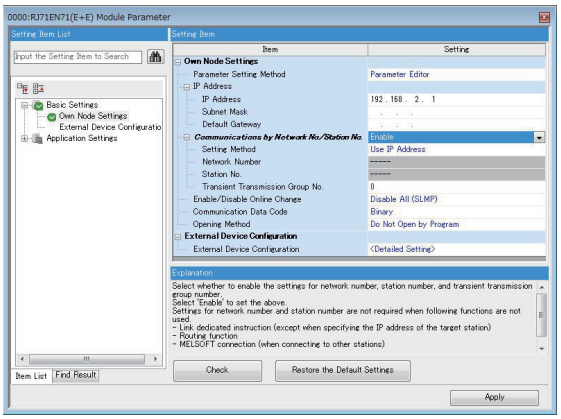

When setting the IP address, Network No., and station number separately

Set [Communications by Network No./Station No.] to [Enable] and [Setting Method] to [Not Use IP Address], and set the IP address, network number, and station number separately.

(1) In the system configuration example, the values are as follows.

IP Address : 192.168.0.1

Network No. : 2

Station No. : 1

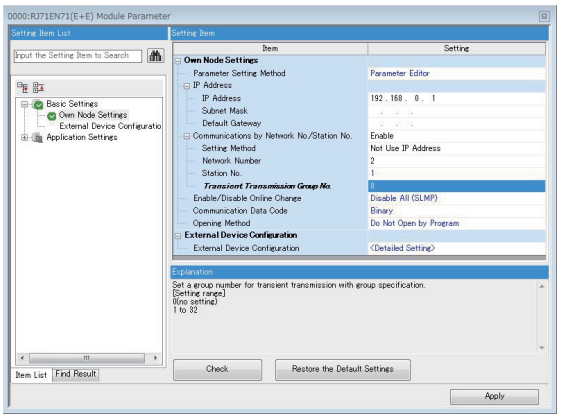

• CC-Link IE Field Network Remote Head Module (2nd)

[Type]

Select [RJ72GF15-T2(LR)] for [Type].

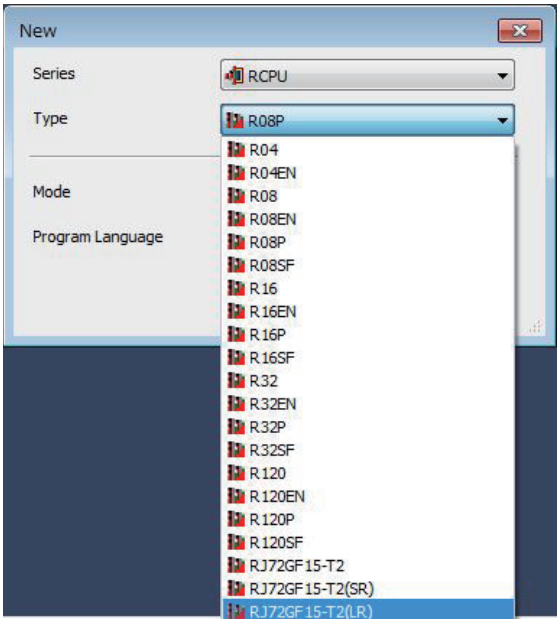

[I/O Assignment]

Set [I/O Assignment] in [System parameter].

At [I/O Assignment], assign the following.

• RJ72GF15-T2(LR))

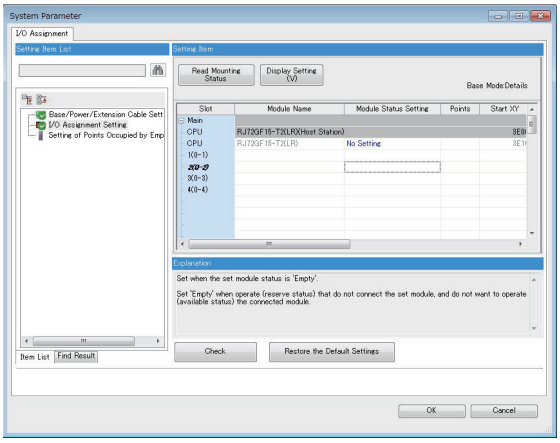

[CPU Parameter]

Set the network number and station number of RJ72GF15-T2(LR).

(1) In the system configuration example, the values are as follows.

Network No. : 1

Station No. : 3

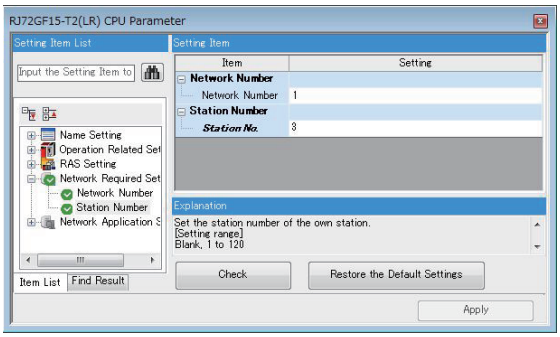

■GOT Side Settings

☞ Page 142 Ethernet module (mounted on remote I/O station) connection (Single configuration)

■Monitoring target change when system switching occurs in a redundant system

When the system switching occurs, CPU (Network No.: 1, PLC station No.: 1) takes over the control of the Ethernet network system as the control system.

The GOT automatically starts monitoring accroding to the specified system.

Serial communication module (mounted on remote I/O station) connection (Single configuration)

■System configuration example

The following connection example for connecting to the redundant CPU via the remote I/O station connected by Serial communication module is explained in this section.

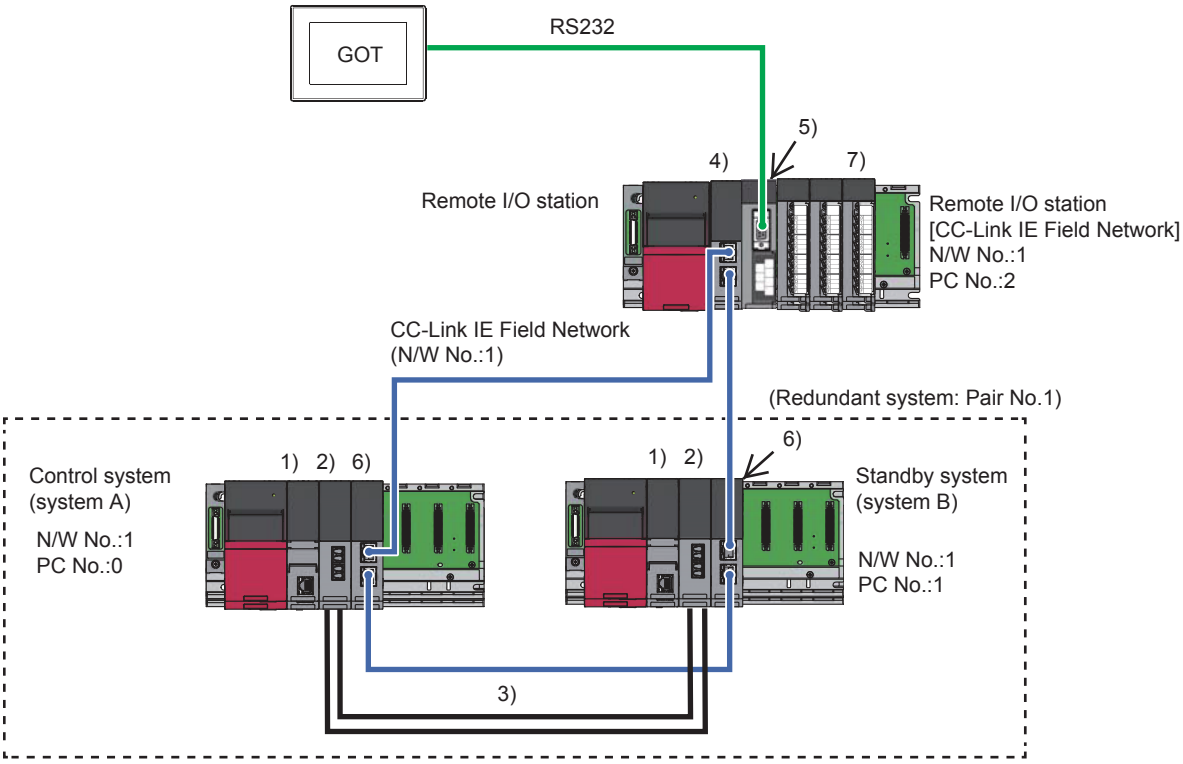

1) Process CPU
2) Redundant function module
3) Tracking cable
4) CC-Link IE Field Network remote head module (RJ72GF15-T2)
5) Serial communication module
6) CC-Link IE Field Network Master/Local module (RJ71GF11-T2(MR))
7) I/O module

■Connection method

Connect the serial communication module (mounted on remote I/O station) to the GOT.

☞ Page 439 SERIAL COMMUNICATION CONNECTION

■PLC Side Setting (GX Works3)

- Redundant CPU (Master station)

☞ Page 142 Ethernet module (mounted on remote I/O station) connection (Single configuration)

- CC-Link IE Field Network Remote Head Module

☞ Page 142 Ethernet module (mounted on remote I/O station) connection (Single configuration)

At [I/O Assignment], replace the Ethernet module with the serial communication module and assign the module.

■GOT Side Settings

Set GT Designer3 as follows.

Setting item	Contents of setting		Model
Controller Type	MELSEC iQ-R, RnMT/NC/RT, CR800-D		GT 27 GT 25 GT 23 GS 25
Device setting (Network setting)	Host	-	
	Other	Network No. 1	
		Station No.: Station number of the control system	
	Control system/ standby system	The system (control system/standby system) of the the monitor target can be speified. Only when checking [Enable Redundant Function] in the following [MELSEC Redundant System Setting], [Control System/Standby System] can be set.	
MELSEC Redundant Setting	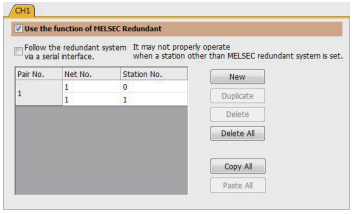 ☞ Page 215 MELSEC Redundant Setting		

■Monitoring target change when system switching occurs in a redundant system

When the system switching occurs, CPU (Network No.: 1, PLC station No.: 1) takes over the control of the Ethernet network system as the control system.

The GOT automatically starts monitoring accroding to the specified system.

Serial communication module (mounted on remote I/O station) connection (Single-line configuration)

■System configuration example

The following connection example for connecting to the redundant CPU via the remote I/O station connected by Serial communication module is explained in this section.

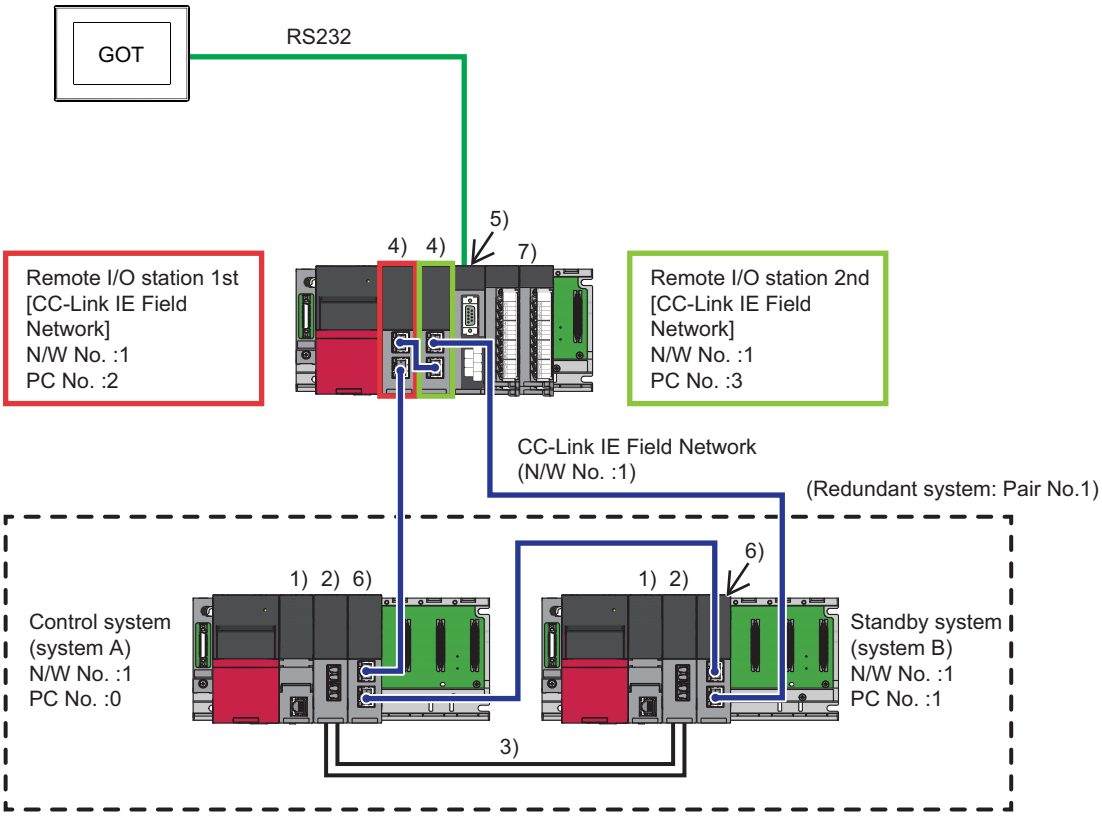

1) Process CPU
2) Redundant function module
3) Tracking cable
4) CC-Link IE Field Network remote head module (RJ72GF15-T2(SR))
5) Serial communication module
6) CC-Link IE Field Network Master/Local module (RJ71GF11-T2(MR))
7) I/O module

■Connection method

Connect the serial communication module (mounted on remote I/O station) to the GOT.

☞ Page 439 SERIAL COMMUNICATION CONNECTION

■PLC Side Setting (GX Works3)

- Redundant CPU (Master station)

☞ Page 148 Ethernet module (mounted on remote I/O station) connection (Single-line configuration)

- CC-Link IE Field Network Remote Head Module

☞ Page 148 Ethernet module (mounted on remote I/O station) connection (Single-line configuration)

At [I/O Assignment], replace the Ethernet module with the serial communication module and assign the module.

■GOT Side Settings

☞ Page 160 Serial communication module (mounted on remote I/O station) connection (Single configuration)

■Monitoring target change when system switching occurs in a redundant system

When the system switching occurs, CPU (Network No.: 1, PLC station No.: 1) takes over the control of the Ethernet network system as the control system.

The GOT automatically starts monitoring accroding to the specified system.

Serial communication module (mounted on remote I/O station) connection (Double-line configuration)

■System configuration example

The following connection example for connecting to the redundant CPU via the remote I/O station connected by Serial communication module is explained in this section.

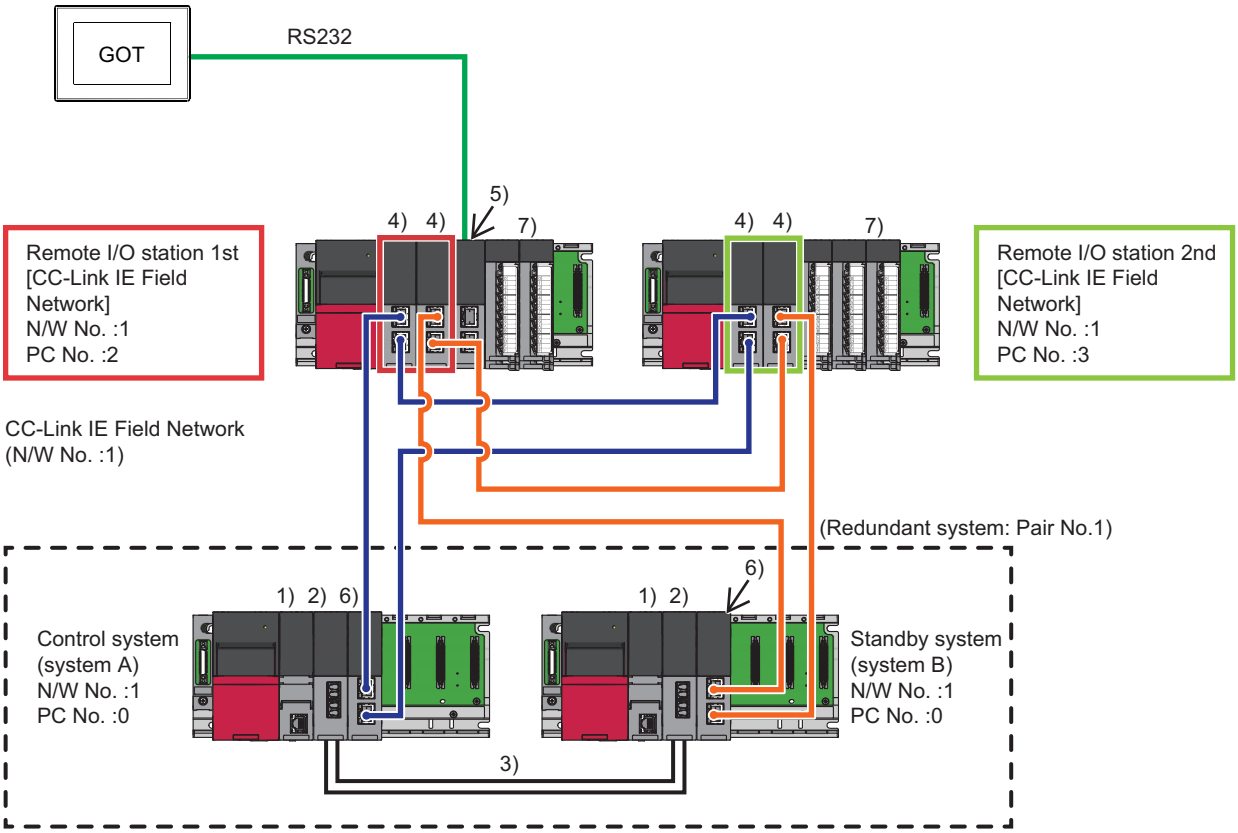

1) Process CPU
2) Redundant function module
3) Tracking cable
4) CC-Link IE Field Network remote head module(RJ72GF15-T2(LR))
5) Serial communication module
6) CC-Link IE Field Network Master/Local module (RJ71GF11-T2(LR))
7) I/O module

■Connection method

Connect the serial communication module (mounted on remote I/O station) to the GOT.

☞ Page 439 SERIAL COMMUNICATION CONNECTION

■PLC Side Setting (GX Works3)

- Redundant CPU (Master station)

☞ Page 153 Ethernet module (mounted on remote I/O station) connection (Double-line configuration)

- CC-Link IE Field Network Remote Head Module (1st)

☞ Page 153 Ethernet module (mounted on remote I/O station) connection (Double-line configuration)

At [I/O Assignment], replace the Ethernet module with the serial communication module and assign the module.

- CC-Link IE Field Network Remote Head Module (2nd)

☞ Page 153 Ethernet module (mounted on remote I/O station) connection (Double-line configuration)

■GOT Side Settings

☞ Page 160 Serial communication module (mounted on remote I/O station) connection (Single configuration)

■Monitoring target change when system switching occurs in a redundant system

When the system switching occurs, CPU (Network No.: 1, PLC station No.: 1) takes over the control of the Ethernet network system as the control system.

The GOT automatically starts monitoring accroding to the specified system.

Connection to CC-Link (intelligent device station)

One-to-one connection of GOT and redundant system

■System configuration example

The following connection configuration examples are explained.

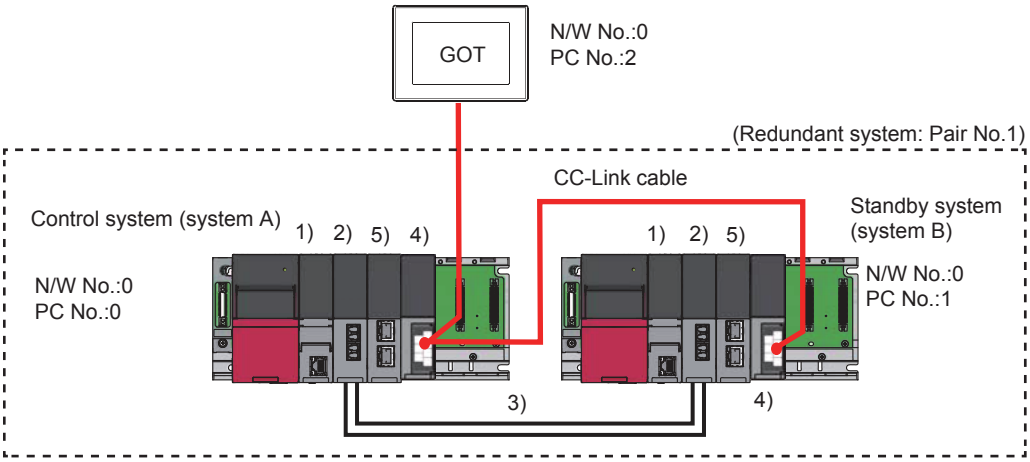

1) Process CPU
2) Redundant function module
3) Tracking cable
4) CC-Link(ID)
5) CC-Link IE Field Network Master/Local module

■Connection method

Connect the CC-Link (intelligent device station) to the GOT.

☞ Page 695 CC-Link CONNECTION (INTELLIGENT DEVICE STATION)

■PLC Side Setting (GX Works3)

- Control system (system A) PLC setting

Module parameter

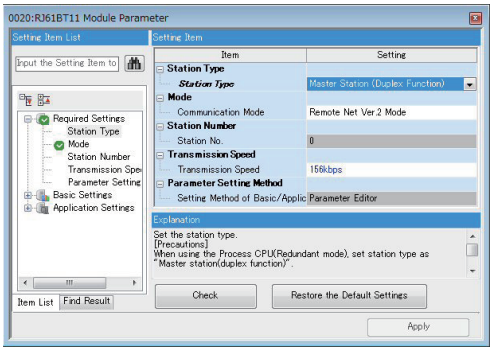

Item	Set value
Station type	Master station (Redundant function is supported)
Mode	Remote net (Ver.2 mode)
Station No.	0 (fixed)
Transmission speed	156kbps
Parameter setting	Parameter (fixed)

- Control system (system B) PLC setting

Module parameter

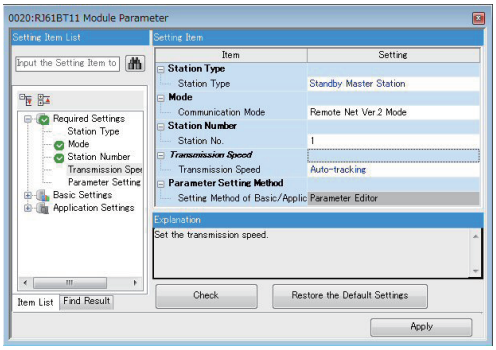

Item	Set value
Station type	Standby master station
Mode	Remote net (Ver.2 mode)
Station No.	1
Transmission speed	Auto-tracking
Parameter setting	Parameter (fixed)

■GOT Side Settings

Set GT Designer3 as follows.

Setting item	Contents of setting		Model
Controller Type	MELSEC iQ-R, RnMT/NC/RT, CR800-D		GT 27 GT 25
Device setting (Network setting)	Host	-	
	Other	Network No. 0	
		Station No.: Station number of the control system	
	Control system/ standby system	The system (control system/standby system) of the the monitor target can be speified. Only when checking [Enable Redundant Function] in the following [MELSEC Redundant System Setting], [Control System/Standby System] can be set.	
MELSEC Redundant Setting	Check [Enable Redundant Function]. A pairing setting is not required. 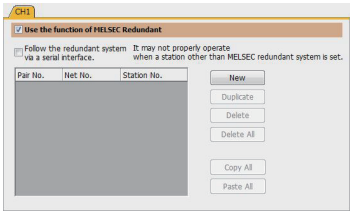 ☞ Page 215 MELSEC Redundant Setting		

■Monitoring target change when system switching occurs in a redundant system

When the system switching occurs, CPU (Network No.: 0, PLC station No.: 1) takes over the control of the Ethernet network system as the control system.

The GOT automatically starts monitoring accroding to the specified system.

When connecting via the serial communication unit

One-to-one connection of GOT and redundant system

■System configuration example

The following connection example for connecting to the redundant CPU via the remote I/O station connected by Serial communication module is explained in this section.

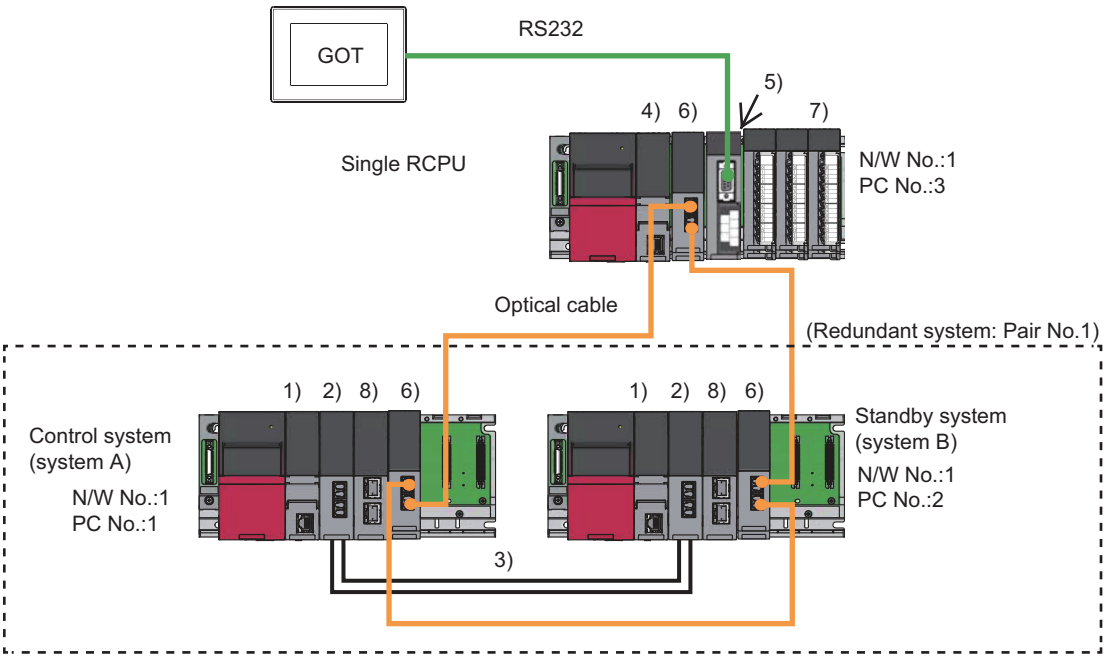

1) Process CPU
2) Redundant function module
3) Tracking cable
4) RCPU
5) Serial communication module
6) CC-Link Controller Network module
7) I/O module
8) CC-Link IE Field Network Master/Local module

■Connection method

Connect the serial communication module (mounted on remote I/O station) to the GOT.

☞ Page 439 SERIAL COMMUNICATION CONNECTION

■PLC Side Setting (GX Works3)

- Redundant CPU

☞ Page 132 Connection to CC-Link IE Controller Network

- Single RCPU

Item	Set value
Network No.	1
Station No.	3

☞ Page 625 CC-Link IE CONTROLLER NETWORK CONNECTION

■GOT Side Settings

Set GT Designer3 as follows.

Setting item	Contents of setting		Model
Controller Type	MELSEC iQ-R, RnMT/NC/RT, CR800-D		GT 27 GT 25 GT 23 GS 25
Device setting (Network setting)	Host	-	
	Other	Network No. 1	
		Station No.: Station number of the control system	
	Control system/ standby system	The system (control system/standby system) of the the monitor target can be speified. Only when checking [Enable Redundant Function] in the following [MELSEC Redundant System Setting], [Control System/Standby System] can be set.	
MELSEC Redundant Setting	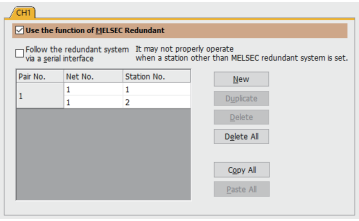 ☞ Page 215 MELSEC Redundant Setting		

■Monitoring target change when system switching occurs in a redundant system

When the system switching occurs, CPU (Network No.: 1, PLC station No.: 2) takes over the control of the Ethernet network system as the control system.

The GOT automatically starts monitoring accroding to the specified system.

When connecting via the extension base unit for the redundant system

Serial communication connection

■System configuration example

The following describes a connection configuration example for connecting the GOT to a redundant CPU via the serial communication module mounted on the extension base unit for the redundant system.

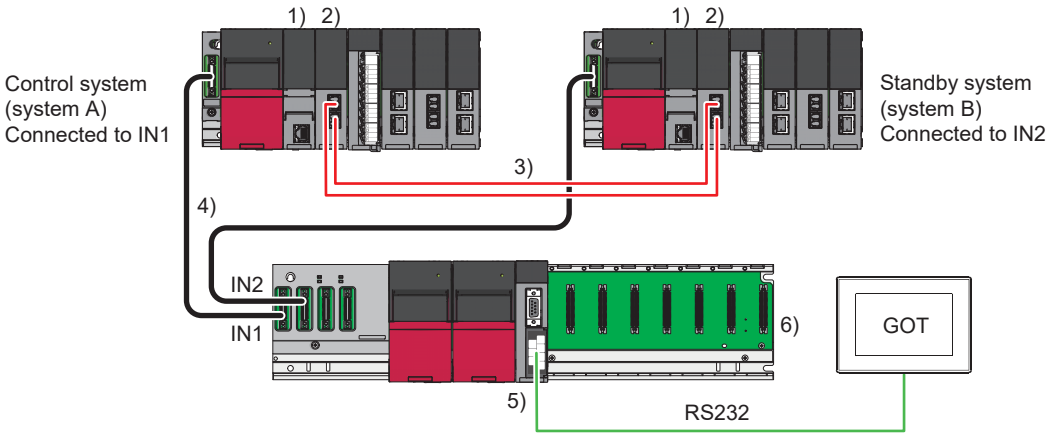

1) Process CPU
2) Redundant function module
3) Tracking cable
4) Extension cable
5) Serial communication module
6) Extension base unit for the redundant system

■Connection method

Connect the serial communication module (mounted on the extension base unit for the redundant system) to the GOT.

For details on the system configuration, refer to the following.

☞ Page 439 SERIAL COMMUNICATION CONNECTION

■PLC settings (GX Works3) and GOT settings

Redundant system settings are not required.

Set the connection with the serial communication module.

For the setting details, refer to the following.

☞ Page 439 SERIAL COMMUNICATION CONNECTION

■Change of the monitoring target when system switching occurs in the redundant system

When the system switching occurs, CPU (connected to IN2 of the extension base unit for the redundant system) takes over the control of the Ethernet network system as the control system.

The GOT automatically starts monitoring according to the specified system.

Ethernet connection

■System configuration example

The following describes a connection configuration example for connecting the GOT to a redundant CPU via the Ethernet module mounted on the extension base unit for the redundant system.

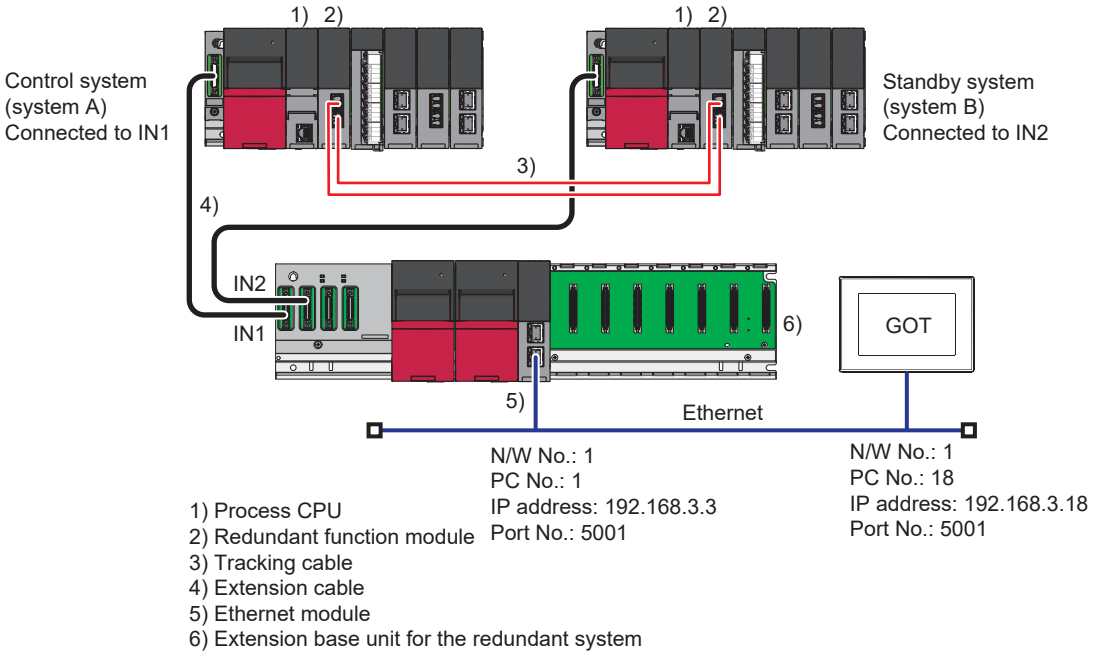

■Connection method

Connect the Ethernet module (mounted on the extension base unit for the redundant system) to the GOT.

For details on the system configuration, refer to the following.

☞ Page 217 ETHERNET CONNECTION

■PLC settings (GX Works3) and GOT settings

Redundant system settings are not required.

Set the connection with the Ethernet module.

For the setting details, refer to the following.

☞ Page 217 ETHERNET CONNECTION

■Change of the monitoring target when system switching occurs in the redundant system

When the system switching occurs, CPU (connected to IN2 of the extension base unit for the redundant system) takes over the control of the Ethernet network system as the control system.

The GOT automatically starts monitoring according to the specified system.

CC-Link connection (intelligent device station)

■System configuration example

The following describes a connection configuration example for connecting the GOT to a redundant CPU via the CC-Link module mounted on the extension base unit for the redundant system.

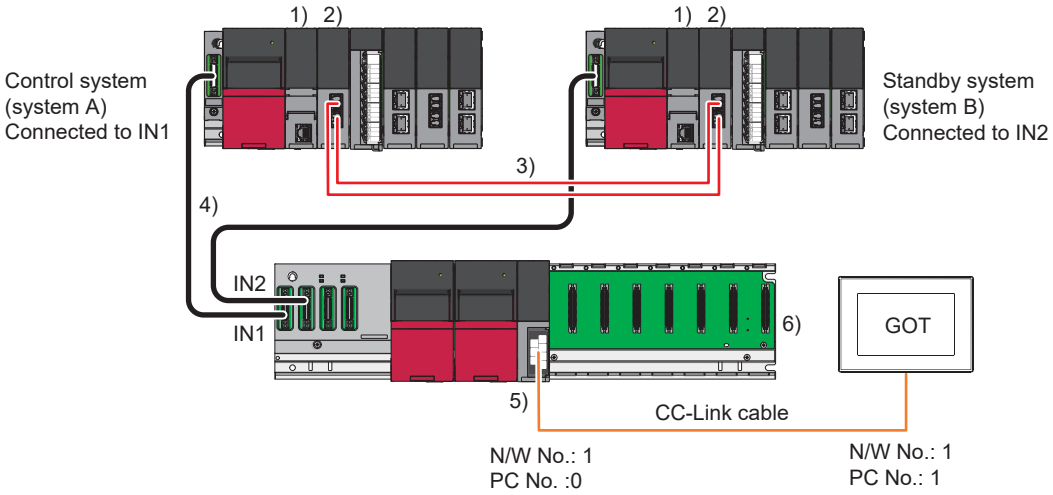

1) Process CPU
2) Redundant function module
3) Tracking cable
4) Extension cable
5) CC-Link(ID)
6) Extension base unit for the redundant system

■Connection method

Connect the CC-Link module (mounted on the extension base unit for the redundant system) to the GOT.

For details on the system configuration, refer to the following.

☞ Page 695 CC-Link CONNECTION (INTELLIGENT DEVICE STATION)

■PLC settings (GX Works3) and GOT settings

Redundant system settings are not required.

Configure the settings for connection with the CC-Link module.

For the setting details, refer to the following.

☞ Page 695 CC-Link CONNECTION (INTELLIGENT DEVICE STATION)

■Change of the monitoring target when system switching occurs in the redundant system

When the system switching occurs, CPU (connected to IN2 of the extension base unit for the redundant system) takes over the control of the Ethernet network system as the control system.

The GOT automatically starts monitoring according to the specified system.

Precautions

Start of the redundant system

When connected to the redundant system, the GOT starts monitoring after the control system and standby system are decided, regardless of the starting order of the PLC systems A and B.
The GOT starts monitoring when both systems start.
(For the redundant system configured with a redundant extension base unit, the GOT starts monitoring the system that starts first, which is the control system.)
Power on the redundant system within the time set in the GOT (communication timeout time and number of retries) so that the GOT can start monitoring after the redundant system starts (after the control system is decided).
If the power supply does not start within the time set on the GOT, the GOT stops monitoring for safety reasons, and the following system alarm occurs.

- 451: The MELSEC redundant setting and actual system configuration do not match.

If the system alarm occurs, restart the GOT (reapply or reset the power supply) to start monitoring again.

System switching

■When system is switched by user program

- The communication path does not change, and the GOT follows the monitor.
- The system alarm is not displayed.

■When system switches because of a dislocated cable, etc.

- When system switches because of a dislocated cable, etc.
- "450 Path has changed or timeout occurred in redundant system." appears as the system alarm.

Redundant system configuration and operation mode

■System alarm display

With the following system configuration "451: MELSEC Redundant setting and actual system configuration do not match" will appear as the system alarm, and the GOT will not be able to correctly monitor the redundant system's CPU.
If the system alarm occurs, restart the GOT (reapply or reset the power supply) to start monitoring again.
<System configuration>

- System configuration with MELSEC redundant settings that do not match the actual redundant system
- System configuration in which the redundant system operation mode is not the backup mode

■Changing the MELSEC redundant settings

Always reset the GOT after changing the MELSEC redundant settings. If not reset, the changed MELSEC redundant settings will not be applied on the GOT.

When non-redundant system is monitored after setting MELSEC redundant settings

If the MELSEC redundant settings were set for a non-redundant system, the GOT will operate normally.
In this case, if an abnormality (such as powering OFF, or communication timeout error) occurs at the PLC CPU for which the MELSEC redundant setting has been made, the PLC CPU may operate in a different way from the monitoring target change mode that was set in the MELSEC redundant setting.

When redundant system is monitored without making MELSEC redundant setting

When the MELSEC redundant setting is not made, the GOT does not automatically change the monitoring target even if system switching occurs in the redundant system. When the GOT is connected to the standby system, data written to a device are overwritten by the data of the control system, failing to be reflected.
In this case, when data are written to a device in the standby system normally, the system alarm "315 Device writing error. Correct device." is not detected.

When connecting with CC-Link(ID)

When system switching is occurred by the following factors, data link control of CC-Link(ID) does not move from the master station of the new standby system to the standby master station of the new control system and the GOT cannot follow the monitor.

Make sure that the standby master station of the new control system should control data link.

For details of the ladder program for data link control, refer to the following manuals.

- MELSEC iQ-R Series

📖MELSEC iQ-R CC-Link System Master/Local Module User's Manual (Application)

<Factors of system switching>

- Execution of the system switching instruction at the PLC side
- Execution of system switching operation using the engineering tool
- Execution of system switching request from other network modules.

<Why the GOT cannot follow the monitor>

When system switching is occurred by the above factors, data link control does not move to the standby master station because the master station of the new standby system can communicate with the GOT.

Also, the new control system is the standby master station without changing. Therefore, the GOT monitors the master station without following the new control system/new standby system and cannot monitor the redundant system.

3.2 MELSEC Q Series

GT 27 GT 25 GT 23 GS 25

This section explains the restrictions on the connection methods and other information applicable when the QCPU redundant system is monitored by the GOT.

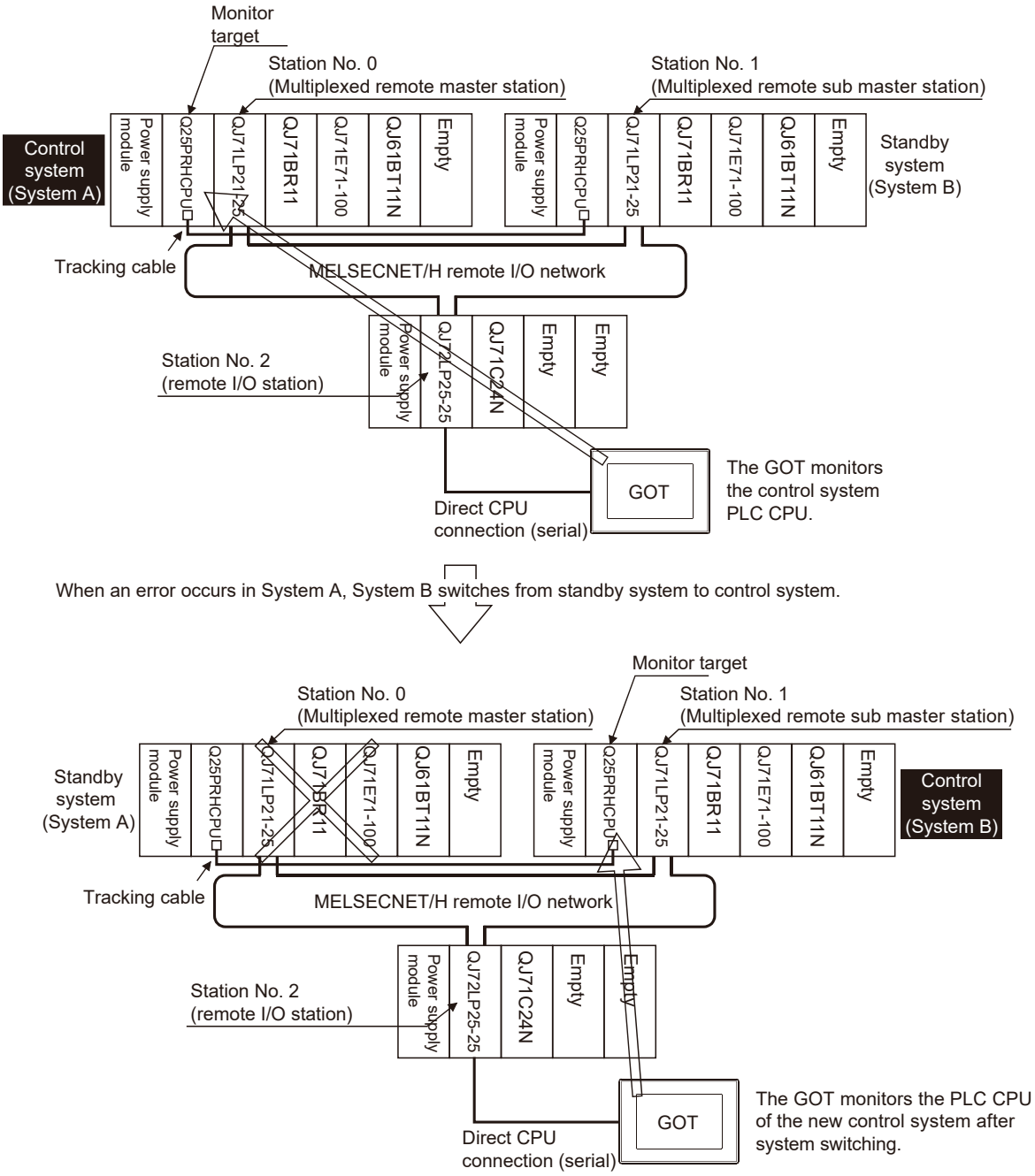

In a redundant system, the monitoring can be performed with the monitoring target specified as the control system or the standby system on the GOT. By specifying the monitoring target PLC CPU as the control system of the redundant system, the monitoring target is automatically changed to the PLC CPU in the control system when system switching occurs.

To enable this automatic changing of the monitoring target at the GOT, settings are required in the GT Designer3.

☞ Page 215 MELSEC Redundant Setting

The following connection methods are available for the QCPU redundant system.

- Connection to remote I/O station in MELSECNET/H network system

Direct CPU connection (serial) (Remote I/O station of MELSECNET/H network system)

☞ Page 179 Direct CPU connection (serial)

- Serial communication connection (Serial communication module mounted on remote I/O station of MELSECNET/H network system)

☞ Page 180 Serial communication connection

- Ethernet connection (Ethernet module mounted on the remote I/O station of the MELSECNET/H network system)

☞ Page 181 Ethernet connection

- Direct CPU connection (serial)

☞ Page 182 Direct CPU connection (serial)

- CC-Link connection (intelligent device station)

☞ Page 188 CC-Link connection (Intelligent device station)

- CC-Link connection (Via G4)

☞ Page 190 CC-Link connection (Via G4)

- MELSECNET/H connection, MELSECNET/10 connection (Network system)

☞ Page 192 MELSECNET/H and MELSECNET/10 connections (Network systems)

- CC-Link IE Controller Network connection (Network system)

☞ Page 193 CC-Link IE controller network connection (Network system)

- Ethernet connection

☞ Page 194 Ethernet connection

- Connection to the redundant type extension base unit

Serial communication connection (Serial communication module mounted on the redundant type extension base unit)

☞ Page 196 Serial communication connection (Connection to the Serial communication module mounted on the redundant type extension base unit)

Ethernet connection (Ethernet module mounted on the redundant type extension base unit)

☞ Page 197 Ethernet connection (Connection to the Ethernet module mounted on redundant type extension base unit)

CC-Link connection (intelligent device station) (CC-Link module mounted on the redundant type extension base unit)

☞ Page 198 CC-Link connection (intelligent device station) (Connection to the CC-Link module mounted on redundant type extension base unit)

CC-Link connection (Via G4) (CC-Link module mounted on the redundant type extension base unit)

☞ Page 199 CC-Link connection (Via G4) (Connection to the CC-Link module mounted on redundant type extension base unit)

For details of PLC CPUs that can be monitored in each connection method of GOT, refer to the following.

☞ Monitorable controllers of each chapter

The following table shows the features of each connection method.

Connection type	Before system switching	After system switching
• Direct CPU connection (serial) (Remote I/O station of MELSECNET/H network system) • Serial communication connection (Serial communication module mounted on the remote I/O station on MELSECNET/H network system) • Ethernet connection (Ethernet module mounted on the remote I/O station of the MELSECNET/H network system)	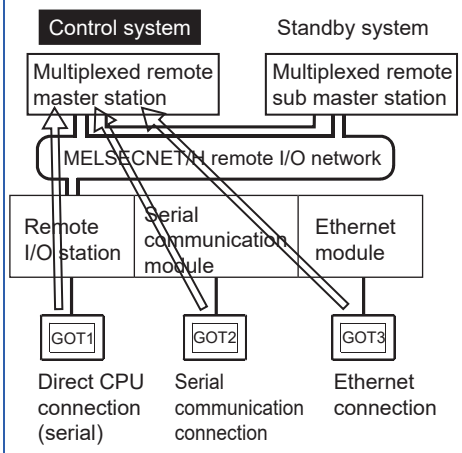	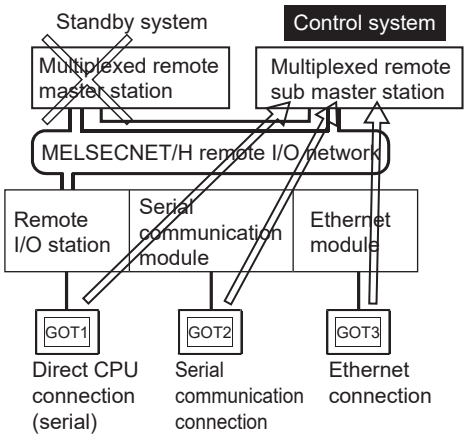 The monitoring target is automatically changed to the control system PLC CPU.
• Direct CPU connection (serial)	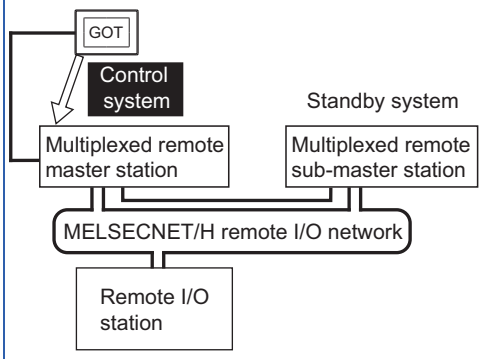	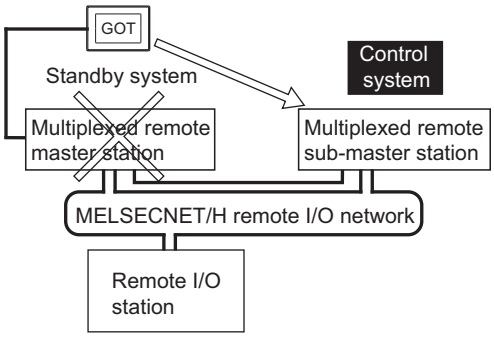 By the MELSEC redundant setting, the GOT automatically changes the monitoring target to the PLC CPU in the control system.*1
	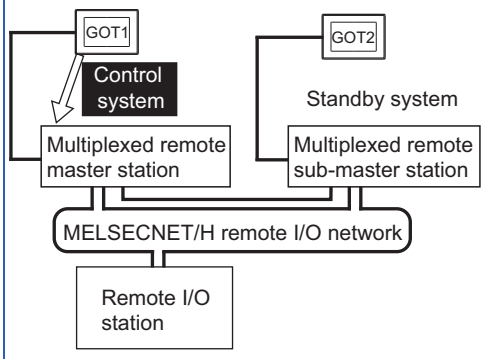 Monitor the PLC CPU of the control system by GOT1.	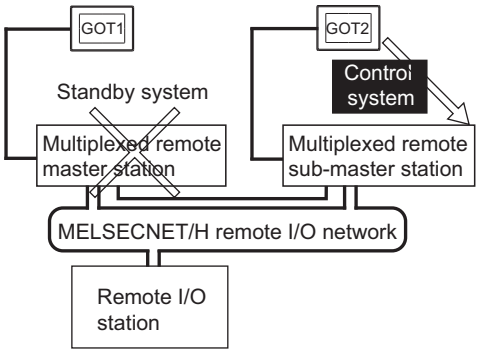 Monitor the PLC CPU of the control system by GOT2.
• CC-Link connection (intelligent device station) • CC-Link connection (Via G4)	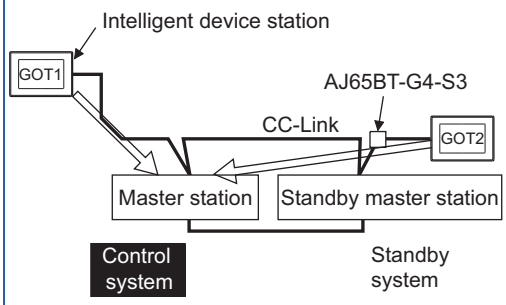	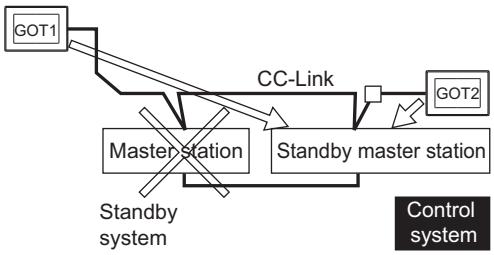 The monitoring target is automatically changed to the control system PLC CPU.

Connection type	Before system switching	After system switching
• MELSECNET/H connection, MELSECNET/ 10 connection (Network system)	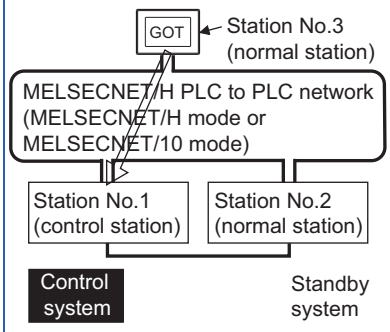	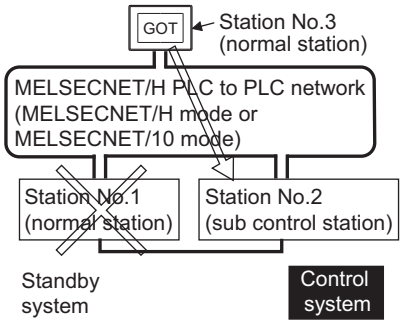 By the MELSEC redundant setting, the GOT automatically changes the monitoring target to the PLC CPU in the control system.*2
• CC-Link IE Controller Network connection (Network system)	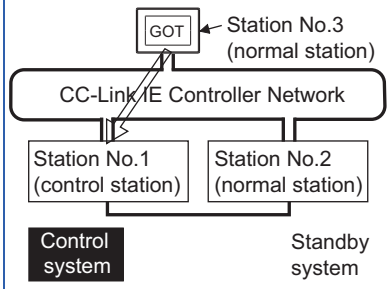	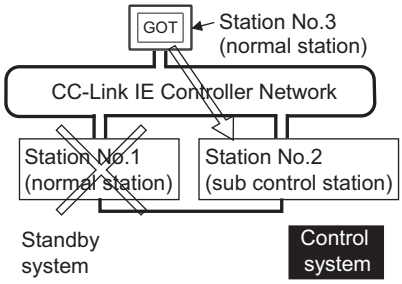 By the MELSEC redundant setting, the GOT automatically changes the monitoring target to the PLC CPU in the control system.*2
• Ethernet connection	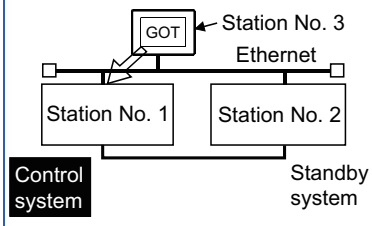	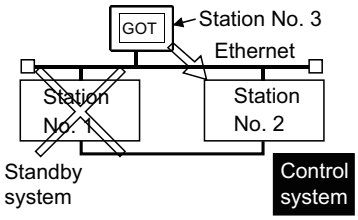 By the MELSEC redundant setting, the GOT automatically changes the monitoring target to the PLC CPU in the control system.*2
• Serial communication connection (Serial communication module mounted on the redundant type extension base unit) • Ethernet connection (Ethernet module mounted on the redundant type extension base unit) • CC-Link connection (intelligent device station) (CC-Link module mounted on the redundant type extension base unit) • CC-Link connection (Via G4) (CC-Link module mounted on the redundant type extension base unit)	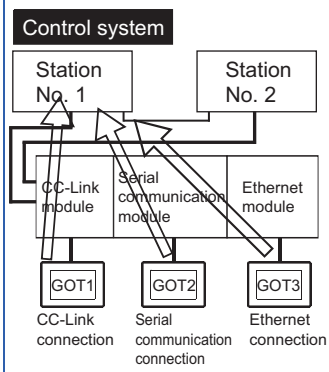	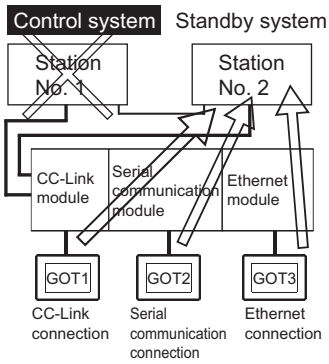

*1 To monitor the control system after the system switching without the MELSEC redundant setting, change the cable connection from the PLC CPU in the previous control system to the control system after system switching.

*2 To monitor the control system after the system switching without the MELSEC redundancy setting, refer to the following.
☞ Page 200 Switch the Monitor Target to the Control System Using the Script Function

Connection to remote I/O station in MELSECNET/H network system

Direct CPU connection (serial)

This section explains the direct CPU connection (serial) used to connect the GOT to the remote I/O station of the MELSECNET/H network system.

The following shows an example of connecting the GOT to the remote I/O station of the MELSECNET/H network system.

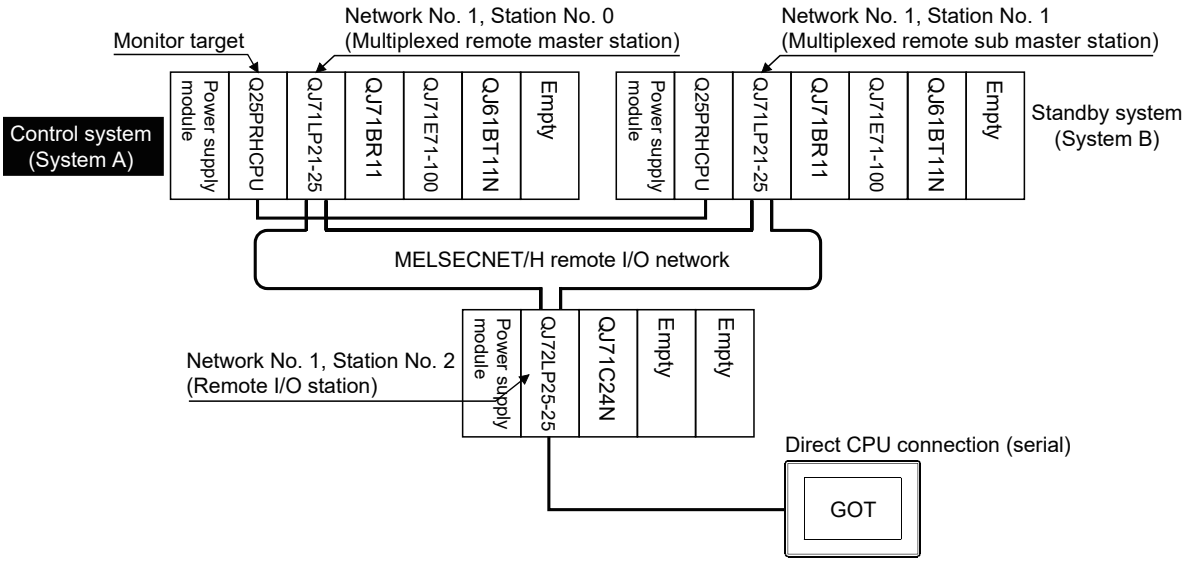

■Connection method

Connect the GOT to the RS-232 interface of the network module (QJ72LP25-25, QJ72LP25G, QJ72BR15) on the remote I/O station of the MELSECNET/H network system.

For details, refer to the following.

☞ Page 375 DIRECT CPU CONNECTION (SERIAL)

■GT Designer3 setting

Set GT Designer3 as follows.

Setting item	Settings		Model
Controller Type	MELSEC-Q/QS, Q17nD/M/NC/DR/DSR, CRnD-700		GT27 GT25 GT23 GS25
Device setting (Network setting)	Other	NW No.: Network No. of MELSECNET/H remote I/O network	
		Station No.: 0 (Master station)	
MELSEC Redundant Setting	Do not set the item.		

In this case, the GOT monitoring is performed by transient transmission of the MELSECNET/H network system. Therefore, a longer time-lag occurs for displaying objects compared with directly monitoring the PLC CPU.

For displaying objects with a shorter time-lag, set the device for link devices B and W of the host station set in the MELSECNET/H network and execute the cyclic transmission.

For details, refer to the following manual.

📖Q Corresponding MELSECNET/H Network System Reference Manual (Remote I/Q network)

■Monitoring target change when system switching occurs in a redundant system

When the system switching occurs, the multiplexed remote sub master station switched to the control system takes over the master operation of MELSECNET/H.

Since the GOT monitors the master station, the monitoring target is automatically changed to the PLC CPU that is operating as the master.

Serial communication connection

This section explains the serial communication connection that connects the GOT to the serial communication module mounted on the remote I/O station of the MELSECNET/H network system.
The following shows an example of connecting the GOT to the serial communication module mounted on the remote I/O station of the MELSECNET/H network system.

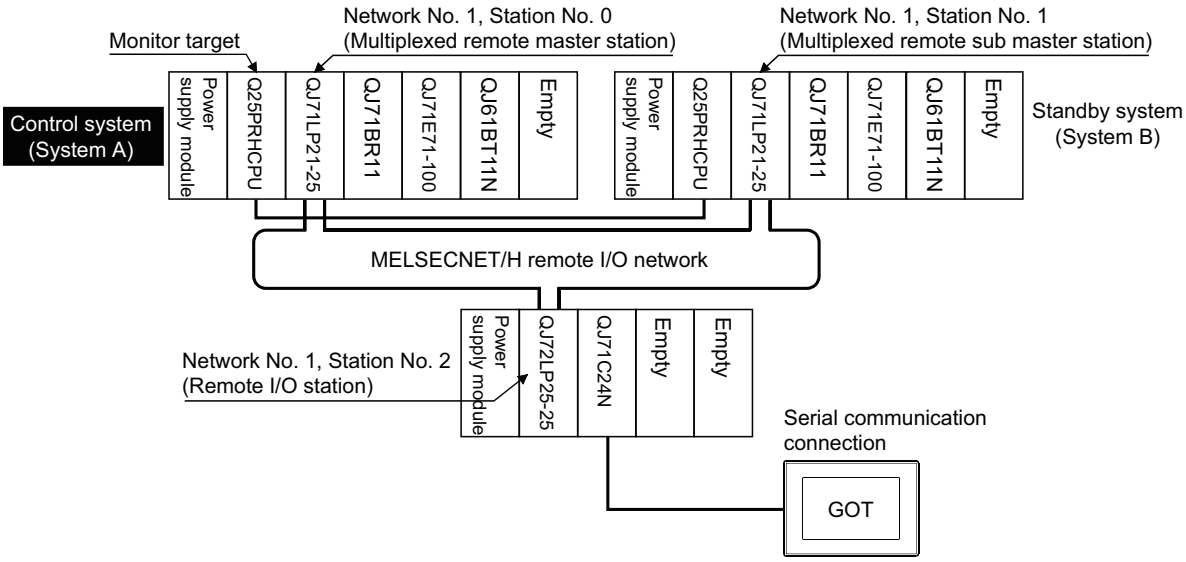

■Connection method

Connect the GOT to the serial communication module (QJ71C24, QJ71C24-R2, QJ71C24N, QJ71C24N-R2, QJ71C24N-R4) or modem interface module (QJ71CM0) mounted on the remote I/ O station of the MELSECNET/H network system.
For details, refer to the following.
☞ Page 439 SERIAL COMMUNICATION CONNECTION

■GT Designer3 setting

Set GT Designer3 as follows.

Setting item	Settings		Model
Controller Type	MELSEC-Q/QS, Q17nD/M/NC/DR/DSR, CRnD-700		GT27 GT25 GT23 GS25
Device setting (Network setting)	Other	NW No.: Network No. of MELSECNET/H remote I/O network	
		Station No.: 0 (Master station)	
MELSEC Redundant Setting	Do not set the item.		

In this case, the GOT monitoring is performed by transient transmission of the MELSECNET/H network system. Therefore, a longer time-lag occurs for displaying objects compared with directly monitoring the PLC CPU.
For displaying objects with a shorter time-lag, set the device for link devices B and W of the host station set in the MELSECNET/H network and execute the cyclic transmission.
For details, refer to the following manual.
📖Q Corresponding MELSECNET/H Network System Reference Manual (Remote I/Q network)

■Monitoring target change when system switching occurs in a redundant system

When the system switching occurs, the multiplexed remote sub master station switched to the control system takes over the master operation of MELSECNET/H.
Since the GOT monitors the master station, the monitoring target is automatically changed to the PLC CPU that is operating as the master.

Ethernet connection

This section explains the Ethernet connection for connecting the GOT to the Ethernet module mounted on the remote I/O station of the MELSECNET/H network system.

The following shows an example of connecting the GOT to the Ethernet module mounted on the I/O station of the MELESCNET/H network system.

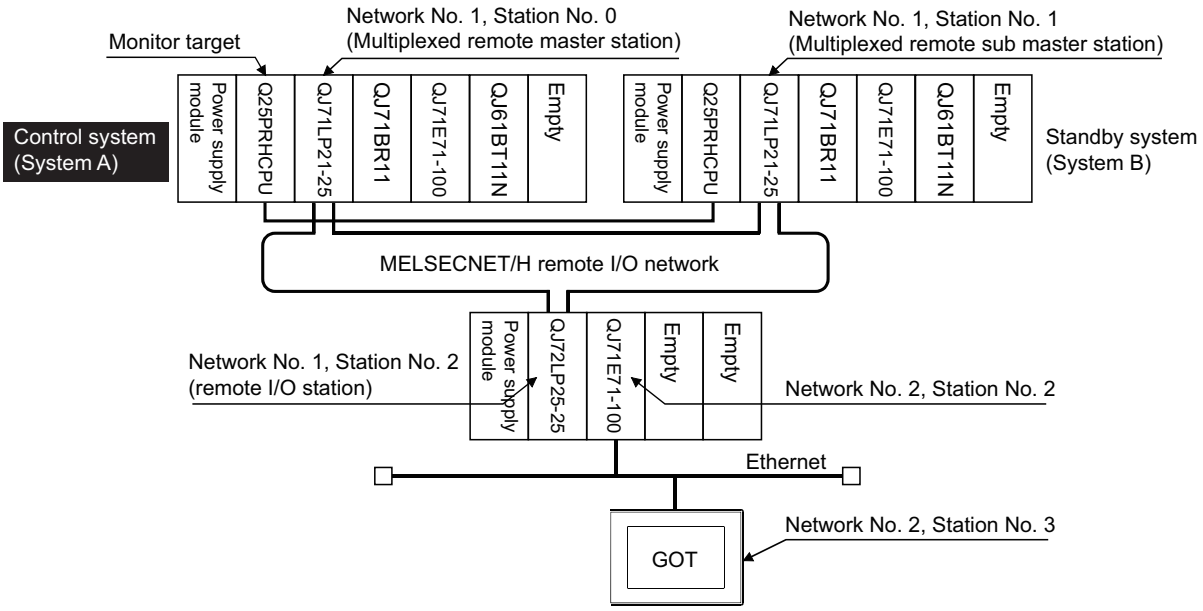

■Connection method

Connect the GOT to the Ethernet module (QJ71E71-100, QJ71E71-B5, QJ71E71-B2, QJ71E71) mounted on the remote I/O station of the MELSECNET/H network system.

For details, refer to the following.

☞ Page 217 ETHERNET CONNECTION

■GT Designer3 setting

Set GT Designer3 as follows.

Setting item	Settings		Model
Controller Type	MELSEC-Q/QS, Q17nD/M/NC/DR/DSR, CRnD-700		GT27 GT25 GT23 GS25
Device setting (Network setting)	Other	NW No.: Network No. of MELSECNET/H remote I/O network	
		Station No.: 0 (Master station)	
MELSEC Redundant Setting	Do not set the item.		
Routing Information Setting	☞ Page 260 Routing parameter setting		

In this case, the GOT monitoring is performed by transient transmission of the MELSECNET/H network system. Therefore, a longer time-lag occurs for displaying objects compared with directly monitoring the PLC CPU.

For displaying objects with a shorter time-lag, set the device for link devices B and W of the host station set in the MELSECNET/H network and execute the cyclic transmission.

For details, refer to the following manual.

📖Q Corresponding MELSECNET/H Network System Reference Manual (Remote I/Q network)

■Monitoring target change when system switching occurs in a redundant system

When the system switching occurs, the multiplexed remote sub master station switched to the control system takes over the master operation of MELSECNET/H.

Since the GOT monitors the master station, the monitoring target is automatically changed to the PLC CPU that is operating as the master.

Direct CPU connection (serial)

This section explains the direct CPU connection (serial) used to connect the GOT to a PLC CPU in the redundant system.
For the direct CPU connection (serial), use one GOT or two GOTs.

When using one GOT

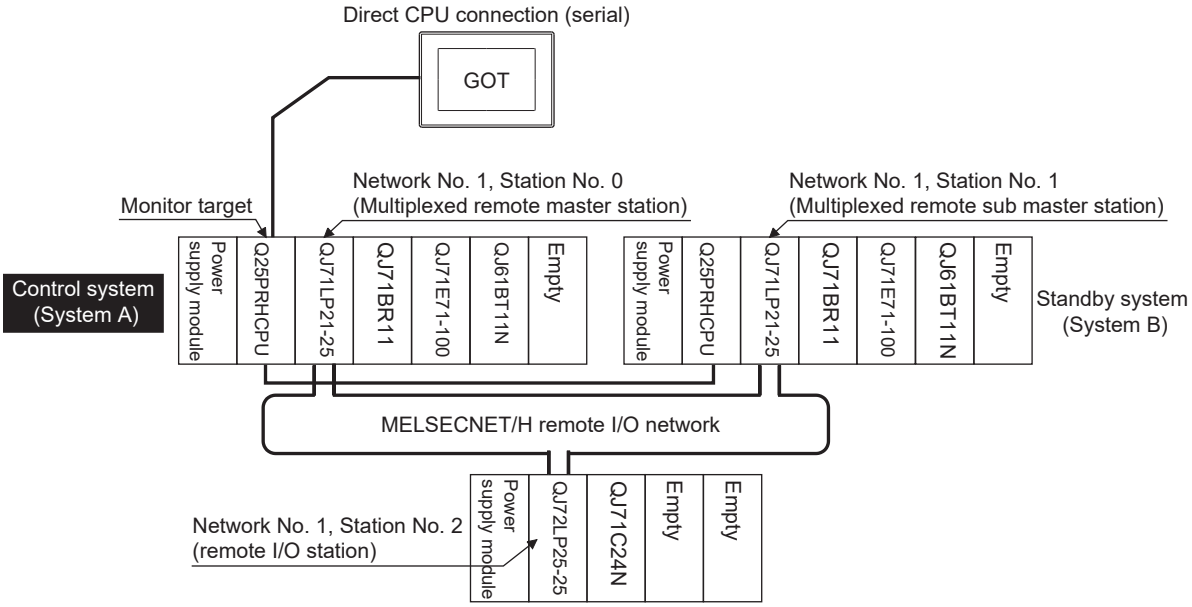

■Connection method

Connect the GOT to the RS-232 interface of the control system CPU module (Q12PRHCPU, Q25PRHCPU) of the redundant system.
For details, refer to the following.
☞ Page 375 DIRECT CPU CONNECTION (SERIAL)

■GT Designer3 setting

Set GT Designer3 as follows.

Setting item	Settings	Model
Controller Type	MELSEC-Q/QS, Q17nD/M/NC/DR/DSR, CRnD-700	GT 27 GT 25 GT 23 GS 25
Device setting (Network setting)	Host	
MELSEC Redundant Setting	☞ Page 215 MELSEC Redundant Setting	

■Monitoring target change when system switching occurs in a redundant system

When the system switching occurs, the PLC CPU (other station) of the control system after system switching takes over the host station operation.
Since the GOT monitors the control system, the monitoring target is automatically changed to other station.

Point

To monitor the control system without MELSEC redundant setting
If the system switching occurs when the MELSEC redundant setting is not made, the GOT cannot change the monitoring target at the occurrence of system switching since it monitors the connected PLC CPU (host station).
As a countermeasure, change the cable connection from the PLC CPU in the previous control system to the control system after system switching.

When using two GOTs

Connect a GOT to each PLC CPU to respond to the system switching.

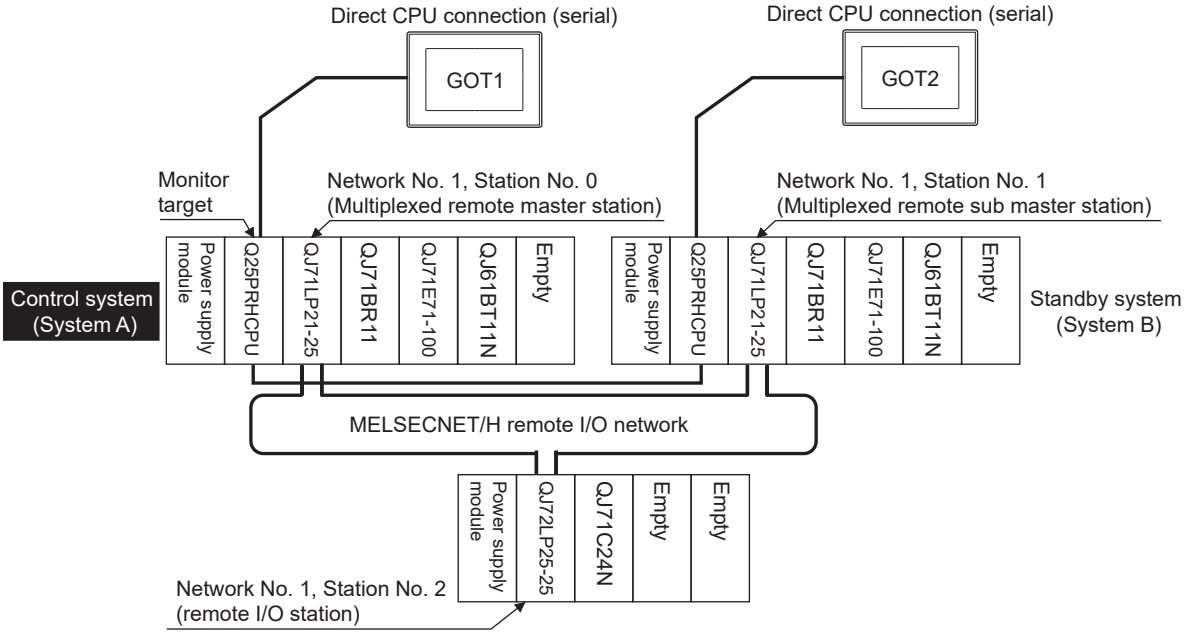

■Connection method

Connect GOTs to the RS-232 interface of the control system and standby system CPU modules (Q12PRHCPU, Q25PRHCPU) of the redundant system.

For details, refer to the following.

☞ Page 375 DIRECT CPU CONNECTION (SERIAL)

■GT Designer3 setting

Set GT Designer3 as follows.

Setting item	Settings	Model
Controller Type	MELSEC-Q/QS, Q17nD/M/NC/DR/DSR, CRnD-700	GT 27 GT 25 GT 23 GS 25
Device setting (Network setting)	Host	
MELSEC Redundant Setting	☞ Page 215 MELSEC Redundant Setting	

■Monitoring target change when system switching occurs in a redundant system

When the system switching occurs, the GOT cannot change the monitor target automatically in response to the system switching.

The GOT that is connected to the control system CPU module after system switching continues the monitoring.

Different from the case using one GOT, no cable reconnection is required.

Point

To automatically change the monitoring target after system switching using one GOT, make the MELSEC redundant settings.

☞ Page 215 MELSEC Redundant Setting

Precautions for direct CPU connection (serial) to a CPU in the redundant system without making MELSEC redundant setting

- As the GOT monitors exclusively the PLC CPU that is directly connected to, the monitor target cannot be changed in response to the system switching of the redundant system.

To change the target monitor in response to the system switching, change the target of the connection cable between the GOT and PLC CPU to the other PLC CPU, or configure the system using GOTs connected to each PLC CPU.

- When monitoring a PLC CPU in the redundant system using the direct CPU connection (serial), only the PLC CPU connected to the GOT can be monitored.
- When connected to the standby system PLC CPU, the writing of the GOT to a device in the connected PLC CPU is not reflected. Design a monitor screen that disables writing to the standby system.

In the redundant system, the tracking function transfers device data from control system to standby system.
When the tracking function is enabled, the device value of the standby system PLC CPU is overwritten by the device value transferred from the control system to the standby system even if the GOT writes to the standby system PLC CPU (Numerical input, Ascii input, Script, Recipe, or others).

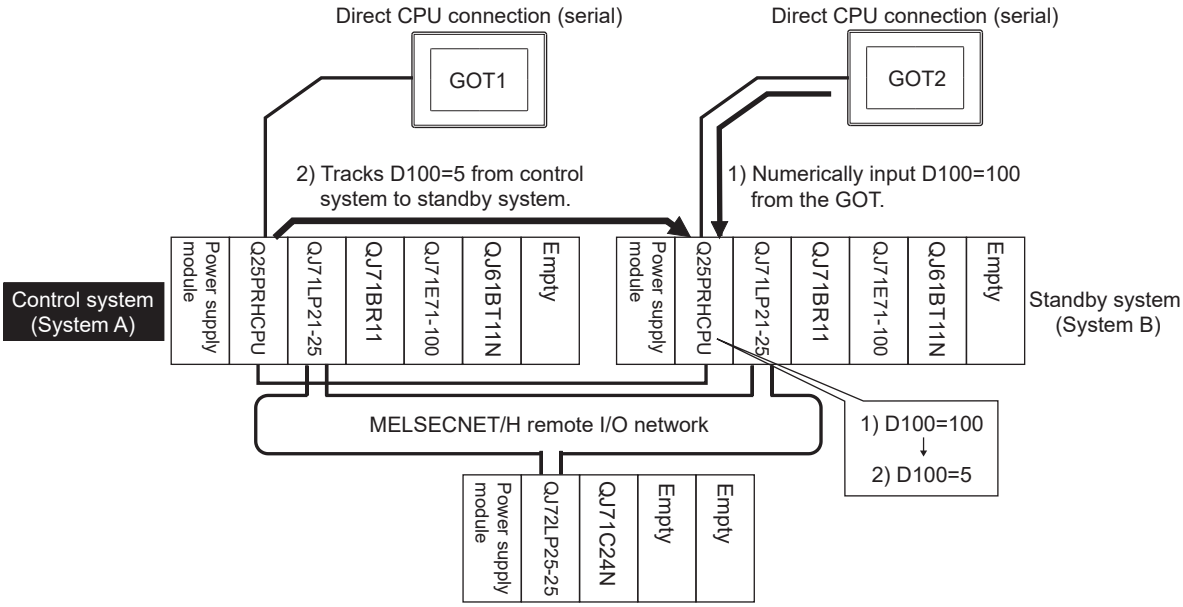

As countermeasures to the above, perform the following.

- Display a monitor screen which indicates that "the connected PLC CPU is the standby system" on a GOT when connecting the GOT to the standby system PLC CPU.
- To display the specified monitor screen when connecting the GOT to the standby system PLC CPU, use the special relay SM1515 (Control status identification flag) of the PLC CPU.

(When the SM1515 is OFF, the connected PLC CPU is the standby system)

- Control the operation of each object by the SM1515, which is set for the operation condition.
- For the screen switching device, use a GOT internal device.

If a device of the PLC CPU is used, the trigger action operation of the GOT may be disabled since the device data of the PLC CPU will is overwritten by the device value transferred with the redundant system tracking function.

The following diagram shows an example of screen setting using SM1515.
System configuration example: when using one GOT

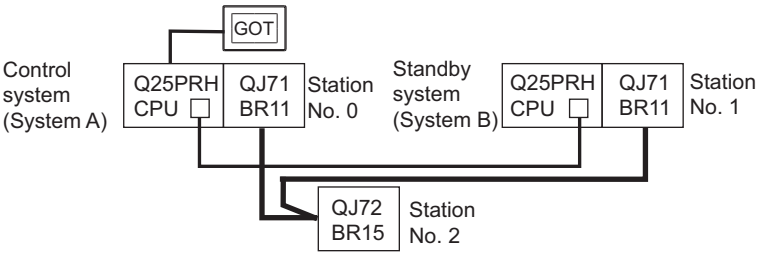

Create a monitor screen on the base screen 1 that performs the following operations for when connecting a GOT to control system and standby system.
1) When connecting to the control system, the monitor screen displays a message calling a touch switch operation, by which the screen switches to the next screen.
2) When connecting to the standby system, the monitor screen displays a message calling the reconnection of the connection cable.

1) When connecting to the control system

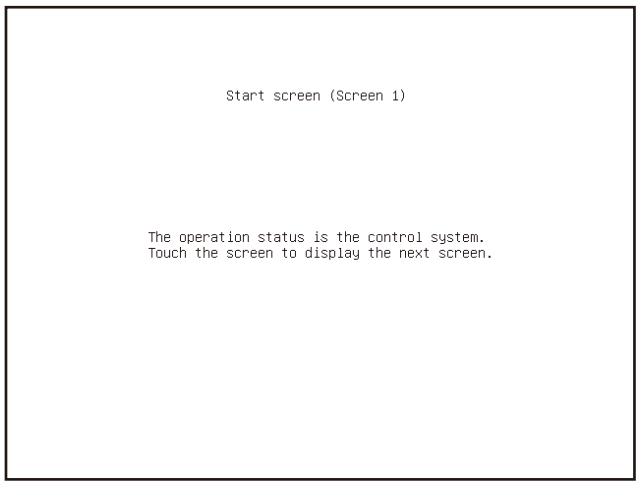

2) When connecting to the standby system

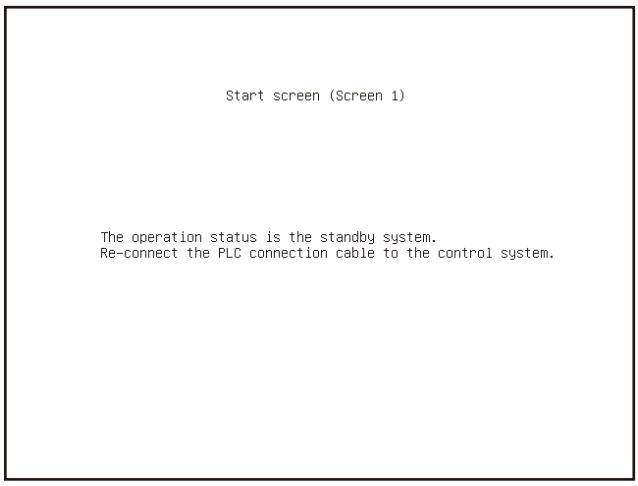

1. Set the screen switching device of the base screen.

Choose [Common] → [GOT Environmental Setting] → [Screen Switching/Window], and set the internal device GD100 as the base screen switching device.
(Do not use PLC CPU devices for the screen switching device. If used, the Trigger Action operation of the GOT may be disabled since the device data of the PLC CPU is overwritten by the device value transferred with the redundant system tracking function)

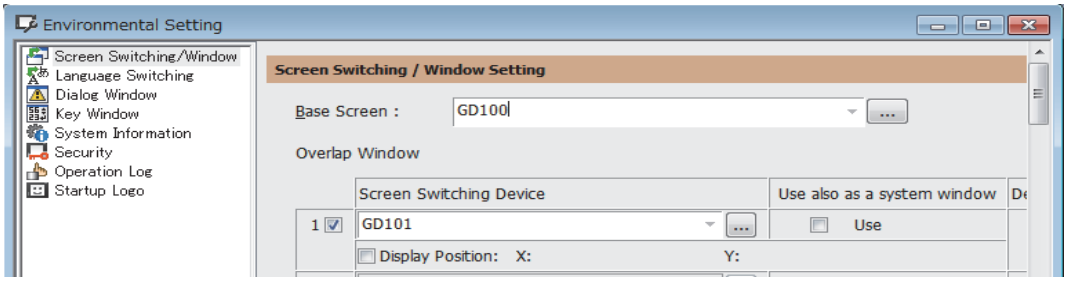

2. Set the trigger action.

Make the setting so that the base screen 1 is displayed when the connected PLC CPU is the standby system (SM1515 is OFF) in the project specified by selecting [Common] → [Trigger Action].

Condition 1 : SM1515 (while OFF)	←	When the SM1515 is OFF, the connected PLC CPU is the standby system.
Operation : GD100=1	←	The screen switches to the base screen 1.

Create the trigger action in the project on the Project tab.

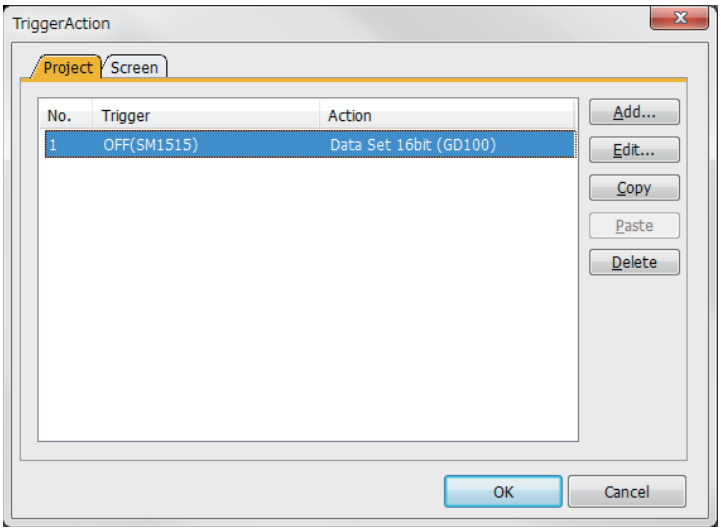

3. Set the comment display on the base screen 1.

Set a comment to be displayed on the base screen 1 depending on the system status (ON/OFF of the SM1515) of the connected PLC CPU using the Comment Display (Bit).

Select [Object] → [Comment Display] → [Bit Comment] and set Comment Display (Bit).

Device/Style tab		
Device	:	SM1515
Shape	:	None
Comment tab	:	Basic Comment
Comment Display Type Text (ON)	:	The operation status is control system. Touch the screen to display the next screen.
Comment Display Type Text (OFF)	:	The operation status is standby system. Reconnect the PLC connection cable to the control system CPU.

1) Device/Style tab screen

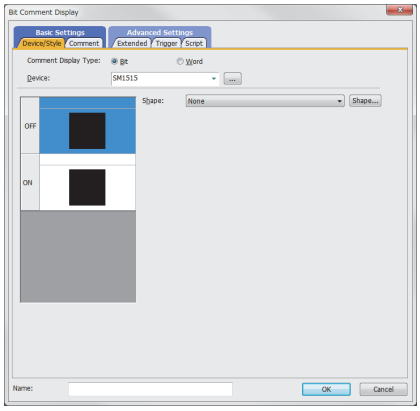

2) Comment tab screen (ON status)

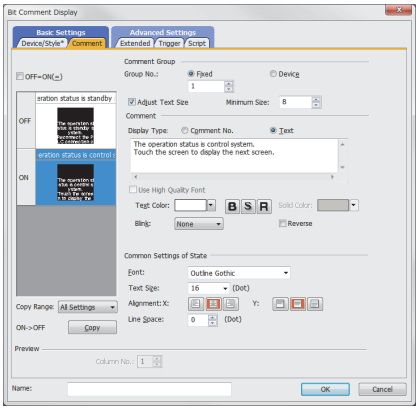

3) Comment tab screen (OFF status)

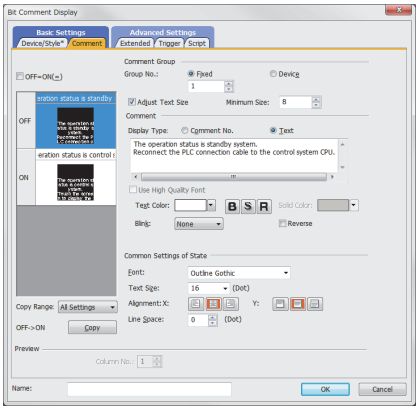

4. Set the touch switches on the base screen 1.

By using the go to screen switch function, set a touch switch for shifting the screen to the next screen with a screen touch, when the connected PLC CPU is the control system (SM1515 is ON).

Select [Object] → [Switch] → [Go To Screen Switch] and set the screen switching function.

Set the same size for the touch switch as the base screen size so that touching any place of the screen enables the switch operation.

Next Screen tab	
Screen Type	: Base
Go To Screen	: Fixed 2
Style tab	
Display Style	: None (Shape)
Trigger tab	
Trigger Type	: ON
Trigger Device	: SM1515

1) Next Screen tab

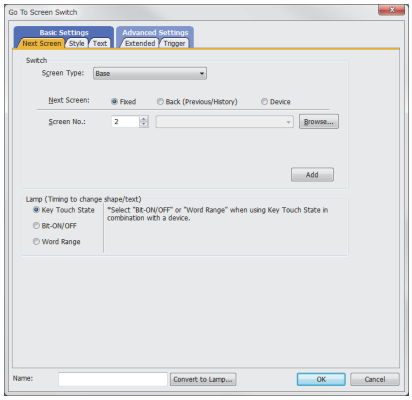

2) Style tab screen

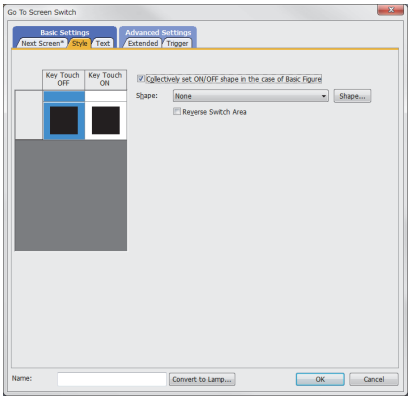

3) Trigger tab screen

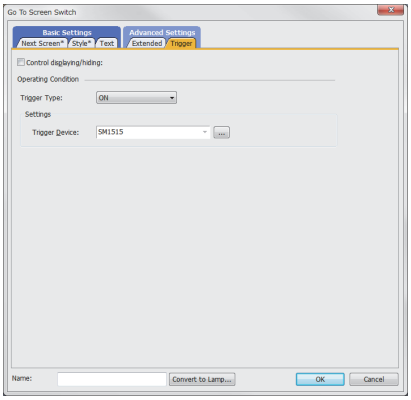

The following shows the created base screen 1.

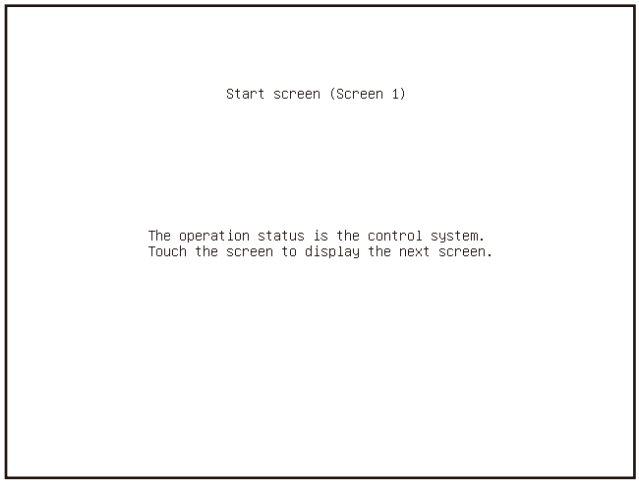

CC-Link connection (Intelligent device station)

This section describes the CC-Link connection (intelligent device station) that connects the GOT set as the intelligent device station to the CC-Link network.

The following shows an example of connecting the GOT set as the intelligent device station to the CC-Link network.

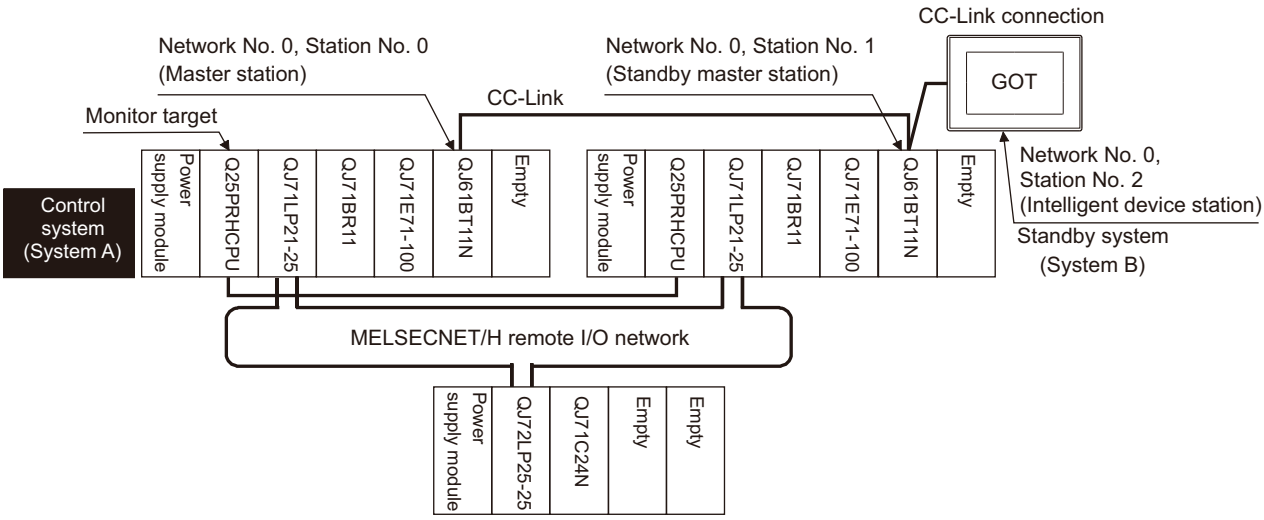

Connection method

Connect the CC-Link network system to the GOT.

For details, refer to the following.

☞ Page 695 CC-Link CONNECTION (INTELLIGENT DEVICE STATION)

GT Designer3 setting

Set GT Designer3 as follows.

Setting item	Settings		Model
Controller Type	MELSEC-Q/QS, Q17nD/M/NC/DR/DSR, CRnD-700		GT 27 GT 25
Device setting (Network setting)	Other	NW No.: 0 (fixed)	
		Station No.: 0 (Master station)	
MELSEC Redundant Setting	Do not set the item.		

In this case, the GOT monitoring is performed by transient transmission of the CC-Link network system. Therefore, a longer time-lag occurs for displaying objects compared with directly monitoring the PLC CPU.

For displaying objects with a shorter time-lag, set the device for RX, RY, RWw, RWr of the host station set in the CC-Link network and execute the cyclic transmission.

For details, refer to the following.

☞ Page 107 CC-Link System Access Range for Monitoring

Monitoring target change when system switching occurs in a redundant system

■System switching due to an alarm occurred in the control system

When system switching occurs, the CC-Link switches the station No. 0 of the master station and the station No. 1 of the standby master station on the network.

The CC-Link module of the new control system after system switching takes over the control as the master station.

Since the GOT monitors the master station, the monitoring target is automatically changed to the new control system after system switching.

■System switching due to a network communication error occurred in other than the CC-Link of the control system, or due to switching by the user

When system switching occurs, the CC-Link does not switch the station No. 0 of the master station and the station No. 1 of the standby master station on the network.

The CC-Link module of the new control system after system switching takes over the control as the standby master station.

Since the GOT monitors the master station, the monitoring target is not automatically changed to the new control system after system switching.

To automatically change the monitoring target of the GOT to the new control system after system switching, switch the data link control from the standby master station to the master station by the sequence program of the new control system.

For details of the sequence program, refer to the following manual.

📖QnPRHCPU User's Manual (Redundant System) (Sample Programs when Using CC-Link)

Point

CC-Link network setting

To automatically change the monitoring target in the QCPU redundant system when using the CC-Link connection, set the CC-Link master station as System A and the standby master station as System B.

For details of using the CC-Link network in the redundant system, refer to the following manual.

📖CC-Link System Master/Local Module User's Manual
📖QnPRHCPU User's Manual (Redundant System)

CC-Link connection (Via G4)

This section explains the CC-Link connection (via G4) that connects the GOT to the AJ65BT-G4-S3 of the CC-Link network.
The following shows an example of connecting the GOT to the AJ65BT-G4-S3 of the CC-Link network.

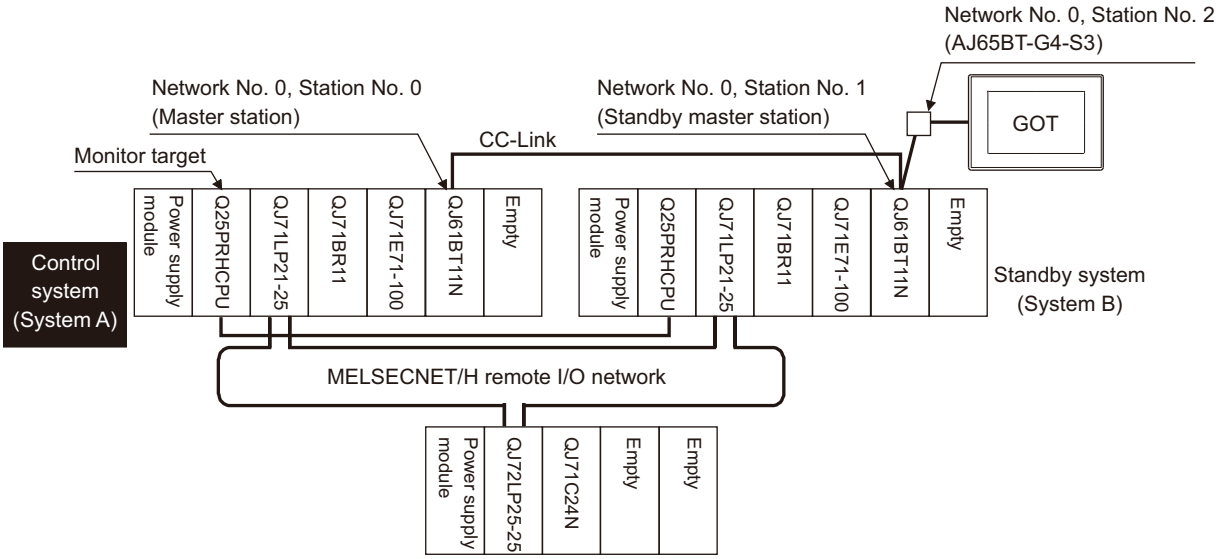

Connection method

Connect the AJ65BT-G4-S3 of the CC-Link network to the GOT.
For details, refer to the following.
☞ Page 783 CC-Link CONNECTION (Via G4)

GT Designer3 setting

Set GT Designer3 as follows.

Setting item	Settings	Model
Controller Type	MELSEC-Q/QS, Q17nD/M/NC/DR/DSR, CRnD-700	GT 27, GT 25, GT 23, GS 25
Device setting (Network setting)	Host	
MELSEC Redundant Setting	Do not set the item.	

Monitoring target change when system switching occurs in a redundant system

■System switching due to an alarm occurred in the control system

When system switching occurs, the CC-Link switches the station No. 0 of the master station and the station No. 1 of the standby master station on the network.

The CC-Link module of the new control system after system switching takes over the control as the master station.

Since the GOT monitors the master station, the monitoring target is automatically changed to the new control system after system switching.

■System switching due to a network communication error occurred in other than the CC-Link of the control system, or due to switching by the user

When system switching occurs, the CC-Link does not switch the station No. 0 of the master station and the station No. 1 of the standby master station on the network.

The CC-Link module of the new control system after system switching takes over the control as the standby master station.

Since the GOT monitors the master station, the monitoring target is not automatically changed to the new control system after system switching.

To automatically change the monitoring target of the GOT to the new control system after system switching, switch the data link control from the standby master station to the master station by the sequence program of the new control system.

For details of the sequence program, refer to the following manual.

📖QnPRHCPU User's Manual (Redundant System) (Sample Programs when Using CC-Link)

Point

CC-Link network setting

To automatically change the monitoring target in the QCPU redundant system when using the CC-Link connection, set the CC-Link master station as System A and the standby master station as System B.

For details of using the CC-Link network in the redundant system, refer to the following manual.

📖CC-Link System Master/Local Module User's Manual
📖QnPRHCPU User's Manual (Redundant System)

MELSECNET/H and MELSECNET/10 connections (Network systems)

This section explains the MELSECNET/H and MELSECNET/10 connections (network systems) that connect the GOT to the MELSECNET/H and MELSECNET/10 network system.
The following provides an example of connecting the GOT set as a normal station to the MELSECNET/ H network system.

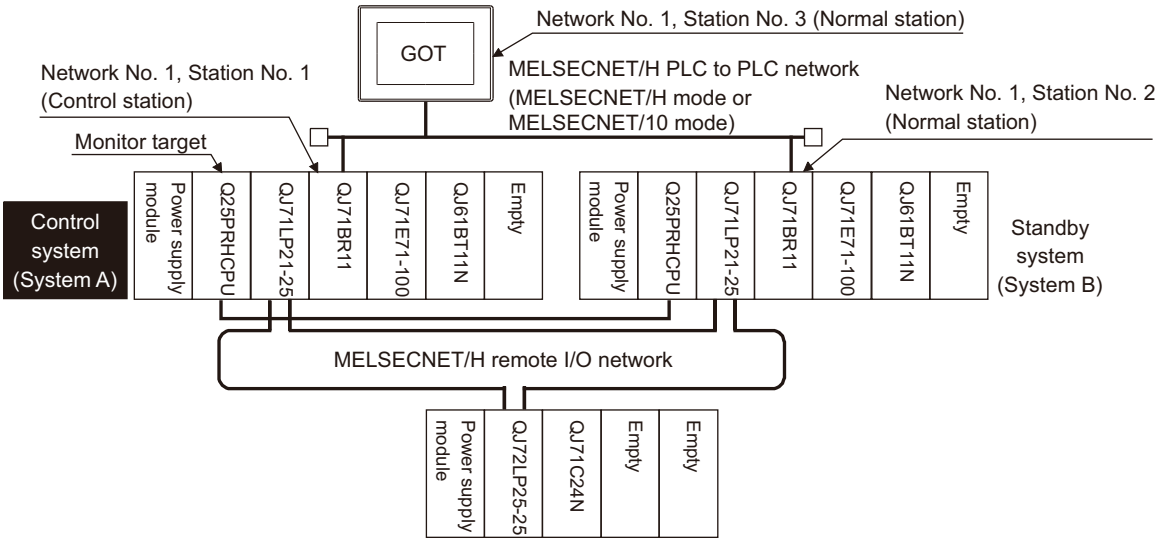

Connection method

Connect the MELSECNET/H network system to the GOT.
For details, refer to the following.
☞ Page 541 MELSECNET/H, MELSECNET/10 CONNECTION (PLC TO PLC NETWORK)

GT Designer3 setting

Set GT Designer3 as follows.

Setting item	Settings		Model
Controller Type	MELSEC-Q/QS, Q17nD/M/NC/DR/DSR, CRnD-700		GT 27 GT 25
Device setting (Network setting)	Other	NW No.: Network No. of MELSECNET/H PLC to PLC network	
		Station No.: Station number of the control system	
MELSEC Redundant Setting	☞ Page 215 MELSEC Redundant Setting		

Monitoring target change when system switching occurs in a redundant system

When system switching occurs, the network module station No. 2 changes from the normal station to the sub control station and takes over the control of the MELSECNET/H network system.
Since the GOT monitors the control system, the monitoring target is automatically changed to the network module station No. 2.

Point

To monitor the control system without MELSEC redundant setting
When system switching occurs, the network module station No. 2 changes from the normal station to the sub control station and takes over the control of the MELSECNET/H network system.
Since the GOT monitors the station of the specified station number, the monitoring target cannot be changed to the station No. 2 in response to the system switching.
As a countermeasure, create a screen to monitor the PLC CPU of the control system by switching the station numbers between System A and System B using the script function.
☞ Page 200 Switch the Monitor Target to the Control System Using the Script Function

CC-Link IE controller network connection (Network system)

This section explains the CC-Link IE Controller Network connection (network system) that connects the GOT to the CC-Link IE controller network.

The following shows an example of connecting the GOT set as a normal station to the CC-Link IE Controller Network.

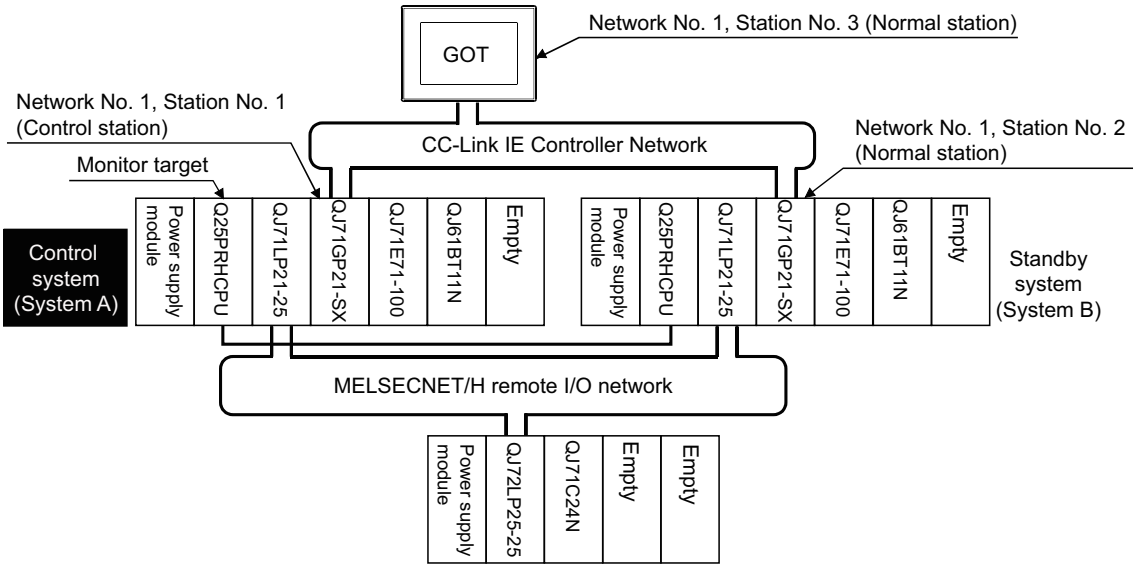

Connection method

Connect the GOT to the CC-Link IE Controller Network.

For details, refer to the following.

☞ Page 625 CC-Link IE CONTROLLER NETWORK CONNECTION

GT Designer3 setting

Set GT Designer3 as described below.

Setting item	Settings		Model
Controller Type	MELSEC-Q/QS, Q17nD/M/NC/DR/DSR, CRnD-700		GT27 GT25
Device setting (Network setting)	Other	NW No.: Network No. of CC-Link IE Controller Network	
		Station No.: Station number of the control system	
MELSEC Redundant Setting	☞ Page 215 MELSEC Redundant Setting		

To specify the station number which was set in the Q redundant setting in the device setting, set the station number as the other station.

Monitoring target change when system switching occurs in a redundant system

When system switching occurs, the network module station No.2 changes from a normal station to the sub control station, and the system with the module takes over the control of the CC-Link IE Controller Network as the control system.

Since the GOT monitors the control system, the monitoring target is automatically changed to the network module station No. 2.

Ethernet connection

This section explains the Ethernet connection that connects the GOT to the Ethernet network system.
The following shows an example of connecting the GOT to the Ethernet network.

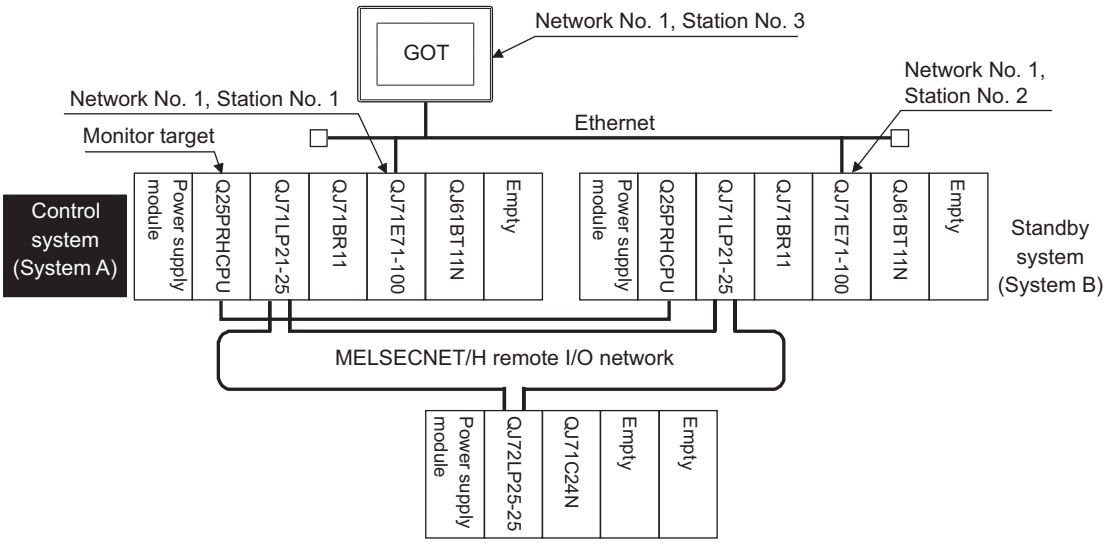

Connection method

Connect the Ethernet network system to the GOT.
Set the Ethernet modules of System A and System B (including NW No., station No, and IP address) to the Ethernet setting of the GOT side.
For details, refer to the following.
☞ Page 217 ETHERNET CONNECTION

GT Designer3 setting

Set GT Designer3 as follows.

Setting item	Settings		Model
Controller Type	MELSEC-Q/QS, Q17nD/M/NC/DR/DSR, CRnD-700		GT 27 GT 25 GT 23 GS 25
Device setting (Network setting)	Host	Host (The control system is monitored.)	
	Other	NW No.: Network No. of Ethernet	
		Station No.: Station number of the control system	
MELSEC Redundant Setting	☞ Page 215 MELSEC Redundant Setting		

To specify the station number which was set in the MELSEC redundant setting in the device setting, set the station number as the other station.

Monitoring target change when system switching occurs in a redundant system

When system switching occurs, Ethernet module station No. 2 takes over the control of the Ethernet network system as the control system.
Since the GOT monitors the control system, he monitoring target is automatically changed to the Ethernet module station No. 2.

Point

When monitoring control system without MELSEC redundant setting

When system switching occurs, Ethernet module station No. 2 takes over the control of the Ethernet network system as the control system.

Since the GOT monitors the station of the specified station number, the monitoring target cannot be changed to the station No. 2 in response to the system switching.

As a countermeasure, create a screen to monitor the PLC CPU of the control system by switching the station numbers between System A and System B using the script function.

☞ Page 200 Switch the Monitor Target to the Control System Using the Script Function

Connection to the redundant type extension base unit

Serial communication connection (Connection to the Serial communication module mounted on the redundant type extension base unit)

This section explains the computer link connection for connecting the GOT to the serial communication module mounted on the redundant type extension base unit.

The following shows an example of connecting the GOT to the serial communication module mounted on the redundant type extension base unit.

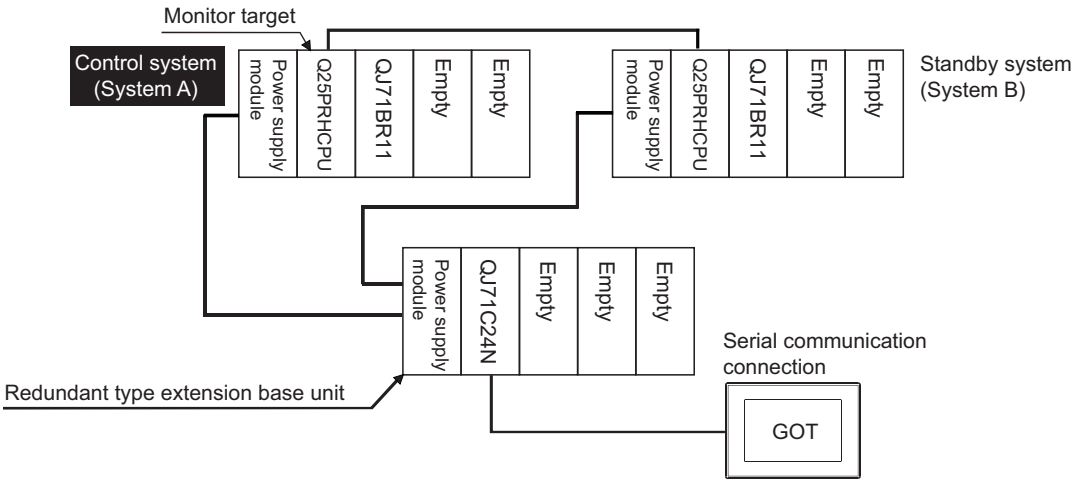

■Connection method

Connect the GOT to the serial communication module (QJ71C24N) mounted on the redundant type extension base unit.

For details, refer to the following.

☞ Page 439 SERIAL COMMUNICATION CONNECTION

■GT Designer3 setting

Set GT Designer3 as follows.

Setting item	Settings	Model
Controller Type	MELSEC-Q/QS, Q17nD/M/NC/DR/DSR, CRnD-700	GT 27 GT 25 GT 23 GS 25
Device setting (Network setting)	Host	
MELSEC Redundant Setting	Do not set the item.	

■Monitoring target change when system switching occurs in a redundant system

When the system switching occurs, the GOT automatically changes the monitoring target to the PLC CPU switched to the control system.

Ethernet connection (Connection to the Ethernet module mounted on redundant type extension base unit)

This section explains the Ethernet connection for connecting the GOT to the Ethernet module mounted on the redundant type extension base unit.

The following shows an example of connecting the GOT to the Ethernet module mounted on the redundant type extension base unit.

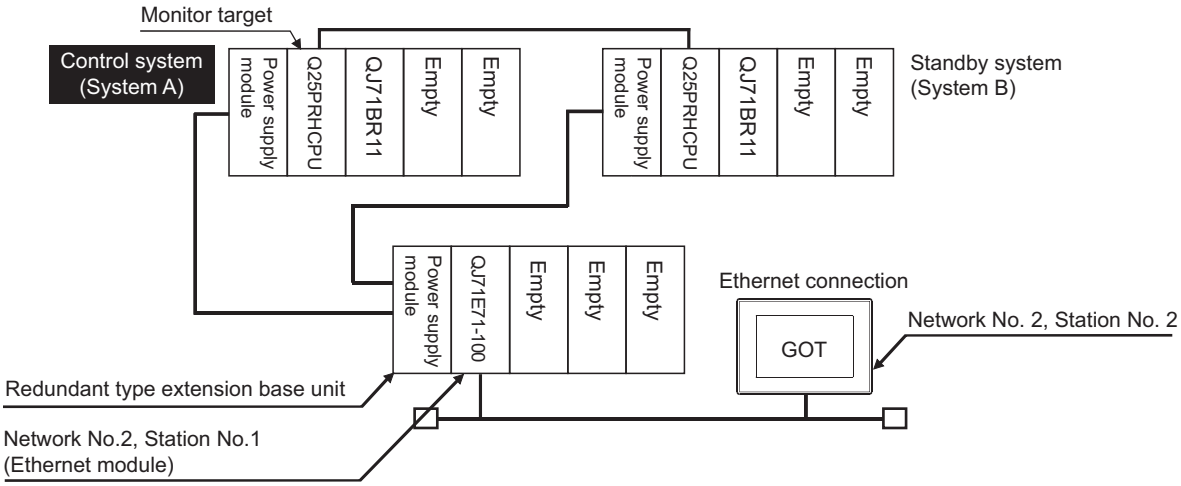

■Connection method

Connect the GOT to the Ethernet module (QJ71E71-100, QJ71E71-B5, QJ71E71-B2) mounted on the redundant type extension base unit.

For details, refer to the following.

☞ Page 217 ETHERNET CONNECTION

■GT Designer3 setting

Set GT Designer3 as follows.

Setting item	Settings	Model
Controller Type	MELSEC-Q/QS, Q17nD/M/NC/DR/DSR, CRnD-700	GT 27 GT 25 GT 23 GS 25
Device setting (Network setting)	Host	
MELSEC Redundant Setting	Do not set the item.	

■Monitoring target change when system switching occurs in a redundant system

When the system switching occurs, the GOT automatically changes the monitoring target to the PLC CPU switched to the control system.

CC-Link connection (intelligent device station) (Connection to the CC-Link module mounted on redundant type extension base unit)

This section explains the CC-Link connection for connecting the GOT to the CC-Link module mounted on the redundant type extension base unit.

The following shows an example of connecting the GOT to the CC-Link module mounted on the redundant type extension base unit.

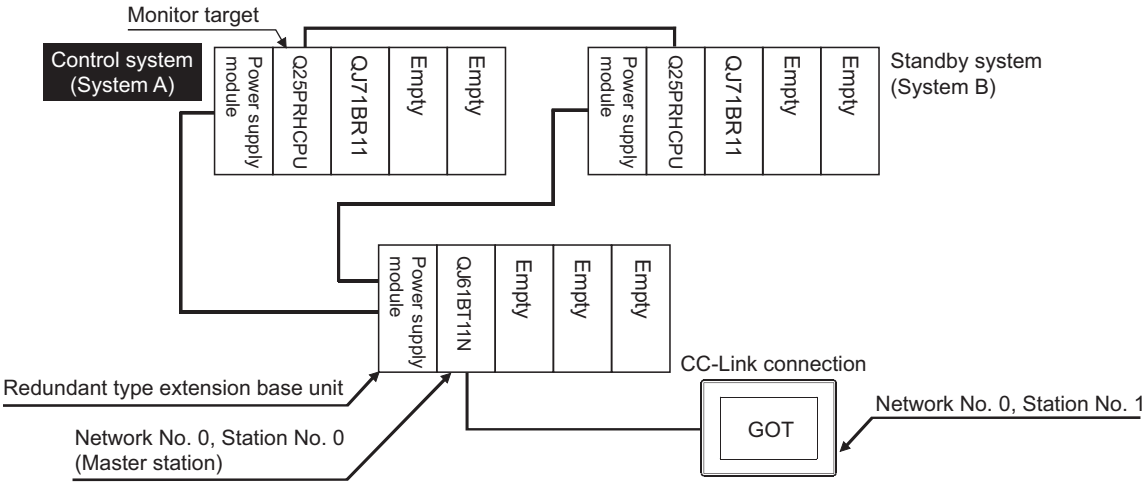

■Connection method

Connect the GOT to the CC-Link module (QJ61BT11N) mounted on the redundant type extension base unit.

For details, refer to the following.

☞ Page 695 CC-Link CONNECTION (INTELLIGENT DEVICE STATION)

■GT Designer3 setting

Set GT Designer3 as follows.

Setting item	Settings		Model
Controller Type	MELSEC-Q/QS, Q17nD/M/NC/DR/DSR, CRnD-700		GT27 GT25
Device setting (Network setting)	Other	NW No.: 0 (fixed)	
		Station No.: 0 (Master station)	
MELSEC Redundant Setting	Do not set the item.		

In this case, the GOT monitoring is performed by transient transmission of the CC-Link network system. Therefore, a longer time-lag occurs for displaying objects compared with directly monitoring the PLC CPU.

For displaying objects with a shorter time-lag, set the device for RX, RY, RWw, RWr of the host station set in the CC-Link network and execute the cyclic transmission.

For details, refer to the following.

☞ Page 107 CC-Link System Access Range for Monitoring

■Monitoring target change when system switching occurs in a redundant system

When the system switching occurs, the GOT automatically changes the monitoring target to the PLC CPU switched to the control system.

CC-Link connection (Via G4) (Connection to the CC-Link module mounted on redundant type extension base unit)

This section explains the CC-Link connection (Via G4) for connecting the GOT to the CC-Link module mounted on the redundant type extension base unit via the AJ65BT-G4-S3.

The following shows an example of connecting the GOT to the AJ65BT-G4-S3 of the CC-Link network.

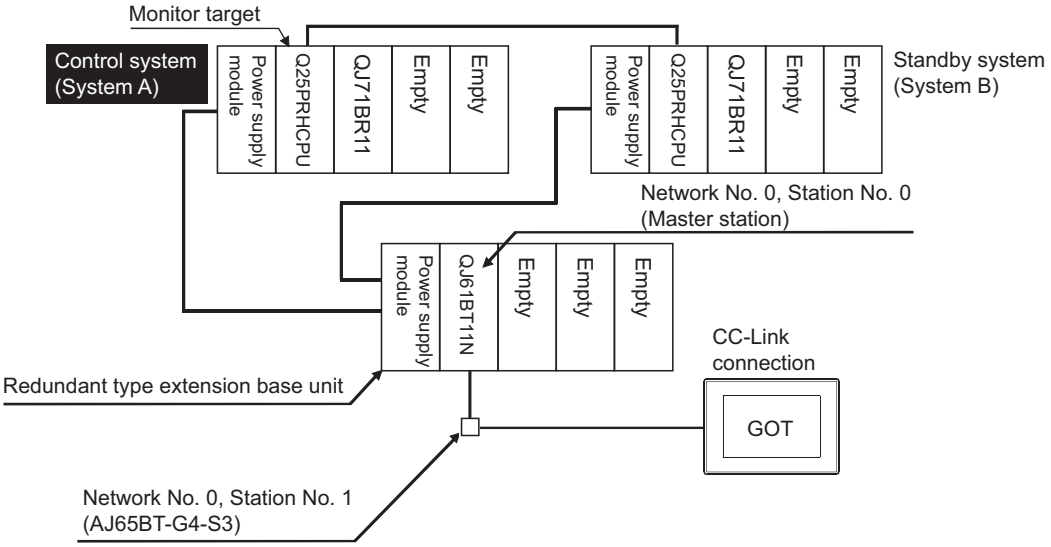

■Connection method

Connect the AJ65BT-G4-S3 of the CC-Link network to the GOT.

For details, refer to the following.

☞ Page 783 CC-Link CONNECTION (Via G4)

■GT Designer3 setting

Set GT Designer3 as follows.

Setting item	Settings	Model
Controller Type	MELSEC-Q/QS, Q17nD/M/NC/DR/DSR, CRnD-700	GT27 GT25 GT23 GS25
Device setting (Network setting)	Host	
MELSEC Redundant Setting	Do not set the item.	

■Monitoring target change when system switching occurs in a redundant system

When the system switching occurs, the GOT automatically changes the monitoring target to the PLC CPU switched to the control system.

Switch the Monitor Target to the Control System Using the Script Function

The following explains how to create a script screen, to be used for the MELSECNET/H or MELSECNET/10 connection (network system), or Ethernet connection, that automatically changes the monitoring target (Station No.) at the occurrence of system switching even if the MELSEC redundant setting is not made.
The script executes the station number switching function or screen switching function.
The following shows the advantages and disadvantages of the station number switching function and screen switching function.

Function	Advantage	Disadvantage
Station number switching function	The monitor screens for Station No. 1 (control system) and Station No. 2 (standby system) can be created on one screen.	Some objects do not allow the station number to be switched.
Screen switching function	All objects can be used since monitor screens are created for each station number.	Monitor screens must be created separately for Station No. 1 (control system) and Station No. 2 (standby system).

The following explains how to use each function.

Method for using the station number switching function

- As a feature of this function, monitor screens for Station No. 1 (control system) and Station No. 2 (standby system) can be created on one screen.
- If the system switching occurs, the GOT can change the monitoring target to the control system PLC CPU on the same monitor screen.
- To achieve this, the script of the GOT monitors the special relay SM1515 (Control system identification flag) of the PLC CPU and stores the station number of the latest control system into the station number switching device.
- Restrictions: Some objects do not allow the station number to be switched.

GT Designer3 (GOT2000) Screen Design Manual

■Setting method (For MELSECNET/H connection, MELSECNET/10 connection)

System configuration example 1: MELSECNET/H connection, MELSECNET/10 connection

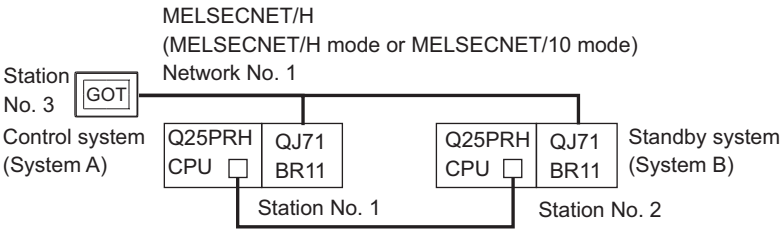

Connected module	Network No.	Station No.
MELSECNET/H network module of control system	1	1
MELSECNET/H network module of standby system		2
GOT connected to MELSECNET/H network or MELSECNET/10 network		3

1. Set the station number switching device.

Select [Common] → [Controller Setting] → [Station No. Switching], and set the internal device GD100 as the station number switching device.

Do not use a device of PLC CPU as a screen switching device. Since the device information is transferred by the tracking transfer function of the redundant system, the trigger action may be disabled.

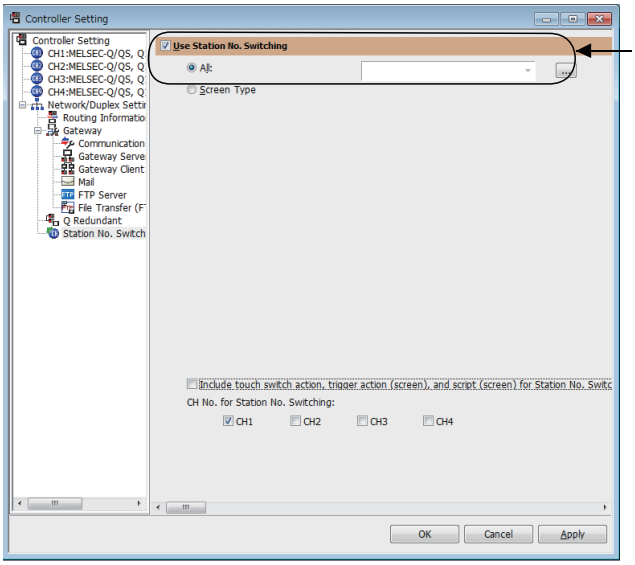

2. Set the trigger action.

Make the settings so that the station number is switched when the faulty station information (SW70) of MELSECNET/H turns ON in the project specified by selecting [Common] → [trigger action].

Condition 1	: SW70.b0 (while ON)	← When b0 is ON, Station No. 1 is abnormal.
Operation	: GD100=2	← Station No. is changed to 2.

Condition 1	: SW70.b1 (while ON)	← When b1 is ON, Station No. 2 is abnormal.
Operation	: GD100=1	← Station No. is changed to 1.

Create the trigger action in the project on the Project tab.

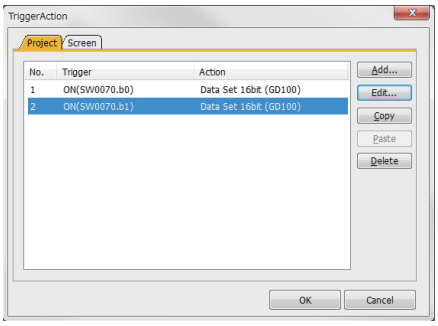

Point

Setting for the trigger action function

For the trigger action function, hexadecimals cannot be used.

To use the trigger action function, set the N/W No. and the station No. of the PLC CPU in [Unsigned BIN].

(For the trigger action function, set [Unsigned BIN] for [Storing Device])

Example:

When N/W No.: 1 and Station No.: 1 (0101H)

Set "257".

When N/W No.: 10 and Station No.: 10 (0A0AH)

Set "2570".

3. Create a monitor screen.

For MELSECNET/H connection, MELSECNET/10 connection or Ethernet connection: (Common)

In the device setting (network setting) of each object, set Network No. 1 and Station No. 1 of the control system.

4. Validate the station number switching function.

On the Basic tab screen specified by selecting [Screen] → [Screen Property], select the item [Switch Station No.] to validate the station number changing function.

Make this setting for each monitor screen.

Check here.

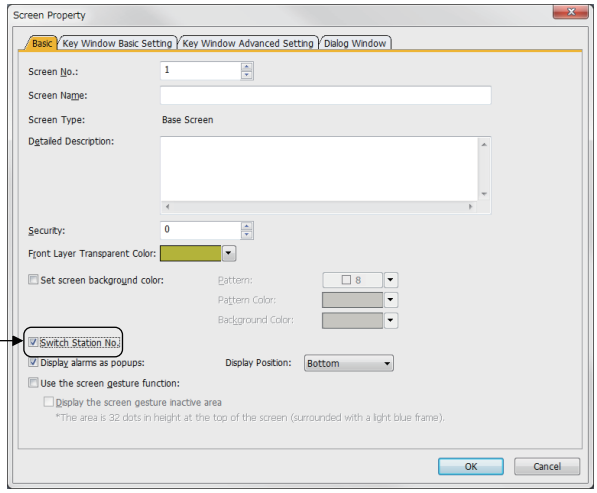

5. Change the station number switching device value in the script.

By selecting [Common] → [Script] → [Script], create a script for each monitor screen that checks the SM1515 status of the current monitor station, and if it is OFF (standby system), changes the station number switching device value.

Set the trigger type of the script as [Ordinary] or [Sampling(about 3s)].

- Screen script for MELSECNET/H connection and MELSECNET/10 connection:

```
// If the host station is not a control station, the station number is switched to that of the other station.
if([b:SM1515]==OFF){
        if([w:GD100]==1){
                [w:GD100]=2;
        }else{
                [w:GD100]=1;
        }
}
```

Set the created script for each screen on the Screen tab.

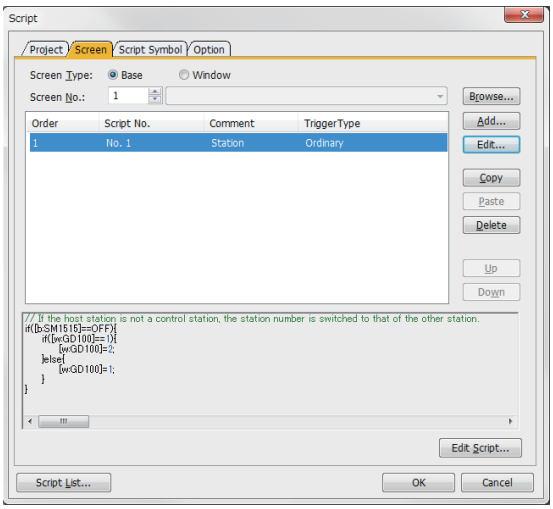

Point

When the MELSECNET/H network is connected to the redundant system only, SW56 (current control station) can be set as the station number switching device.
In this case, even if the system switching occurs, the GOT always monitors the station number that is currently the control station.

■Setting method (Ethernet connection)

System configuration example 2: Ethernet connection

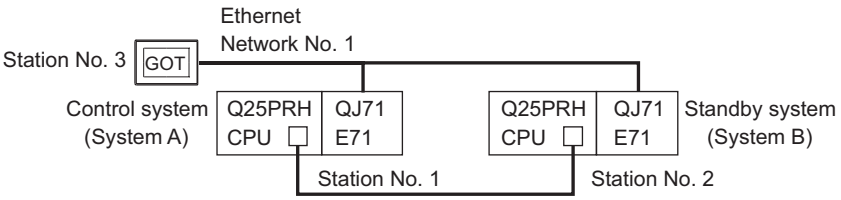

Connected module	Network No.	Station No.
Ethernet module of control system	1	1
Ethernet module of standby system		2
GOT connected to the Ethernet network		3

1. Set the station number switching device.

Select [Common] → [Controller Setting] → [Station No. Switching], and set the internal device GD100 as the station number switching device.

Do not use a device of PLC CPU as a screen switching device. Since the device information is transferred by the tracking transfer function of the redundant system, the trigger action may be disabled.

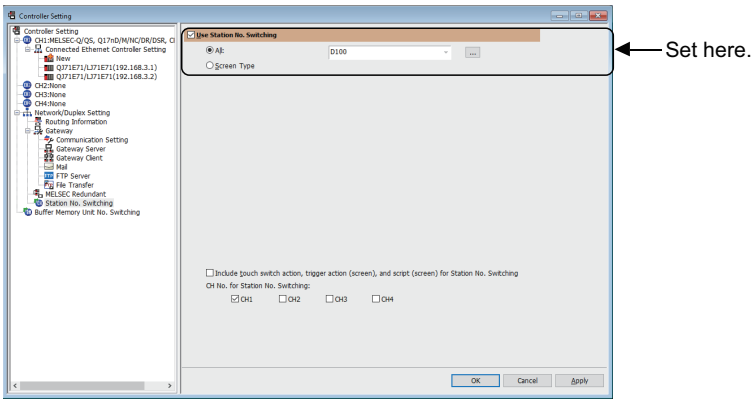

2. Set the trigger action.

Make the setting so that the station number is switched when the faulty station information (GS231) from the station monitoring specified by selecting [Common] → [trigger action] turns ON.

(For Network No. 1 and Station No. 2, set "258"(0102H))

Condition 1	: GS231.b0 (while ON)	← When b0 is ON, Station No. 1 is abnormal.
Operation	: GD100=258(0102H)	← Station No. is changed to 2.

Condition 1	: GS231.b1 (while ON)	← When b1 is ON, Station No. 2 is abnormal.
Operation	: GD100=257(0101H)	← Station No. is changed to 1.

Create the trigger action in the project on the Project tab.

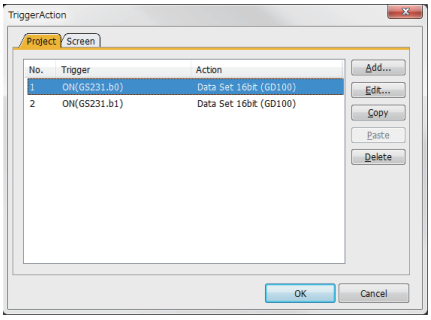

Point

Setting for the trigger action function

For the trigger action function, hexadecimals cannot be used.

To use the trigger action function, set the N/W No. and the station No. of the PLC CPU in [Unsigned BIN].

(For the trigger action function, set [Unsigned BIN] for [Storing Device])

Example:

When N/W No.: 1 and Station No.: 1 (0101H)

Set "257".

When N/W No.: 10 and Station No.: 10 (0A0AH)

Set "2570".

3. Create a monitor screen.

For MELSECNET/H connection, MELSECNET/10 connection or Ethernet connection: (Common)

In the device setting (network setting) of each object, set Network No. 1 and Station No. 1 of the control system.

4. On the screen 1, set the switch for writing the station No. 1 to the station number switching device.

After the GOT is started up, the station number switching device value of the GOT is "0".

For Ethernet connection, the monitor becomes abnormal when the station number switching device value is "0".

Therefore, set the switch for writing the station number to the station number switching device and the switch for shifting to the monitor screen on the screen 1.

To make this setting, select [Object] → [Switch] → [Switch].

The following shows an example of setting GD100=257 (0101H: Network No. 1, Station No. 1) and base screen=2 to one switch.(Base screen 2 is the actually monitoring screen)

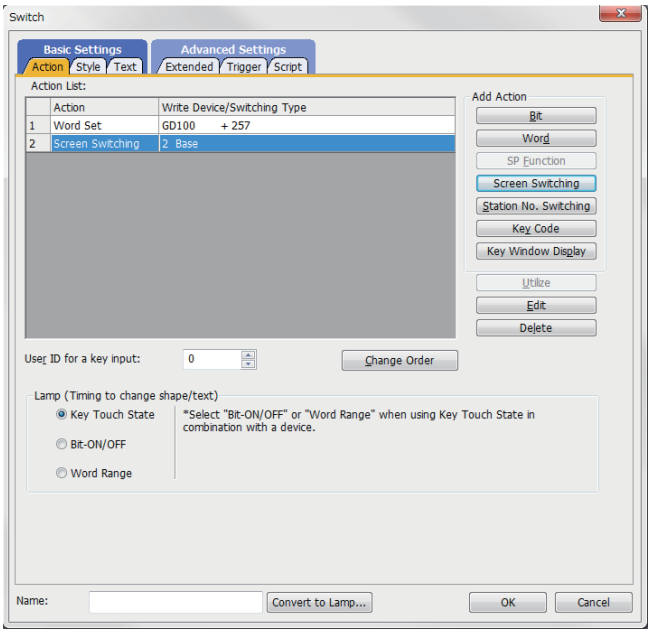

5. Validate the station number switching function.

On the Basic tab screen specified by selecting [Screen] → [Property], select the item [Switch Station No.] to validate the station number changing function.

Make this setting for each monitor screen.

However, do not make this setting on the screen 1 created in step 4.

Check here.

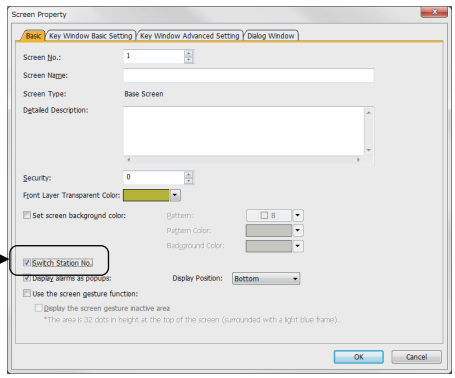

6. Change the station number switching device value in the script.

By selecting [Common] → [Script] → [Script], create a script for each monitor screen that checks the SM1515 status of the current monitor station, and if it is OFF (standby system), changes the station number switching device value.

Set the trigger type of the script as [Ordinary] or [Sampling(about 3s)].

- Screen script for Ethernet connection:

```
// If the host station is not a control station, the station number is switched to that of the other station.
if([b:SM1515]==OFF){
        if([w:GD100]==0x0101){                  // Station No. 1 to 2
                [w:GD100]=0x0102;
        }else{                                  // Station No. 2 to 1
                [w:GD100]=0x0101;
        }
}
```

For the Ethernet connection, create a script so that the network No. and station number are set to the station switching device.

For Network No. 1 and Station No. 2, create "[w:GD100]=0x0102".

Set the created script for each screen on the Screen tab.

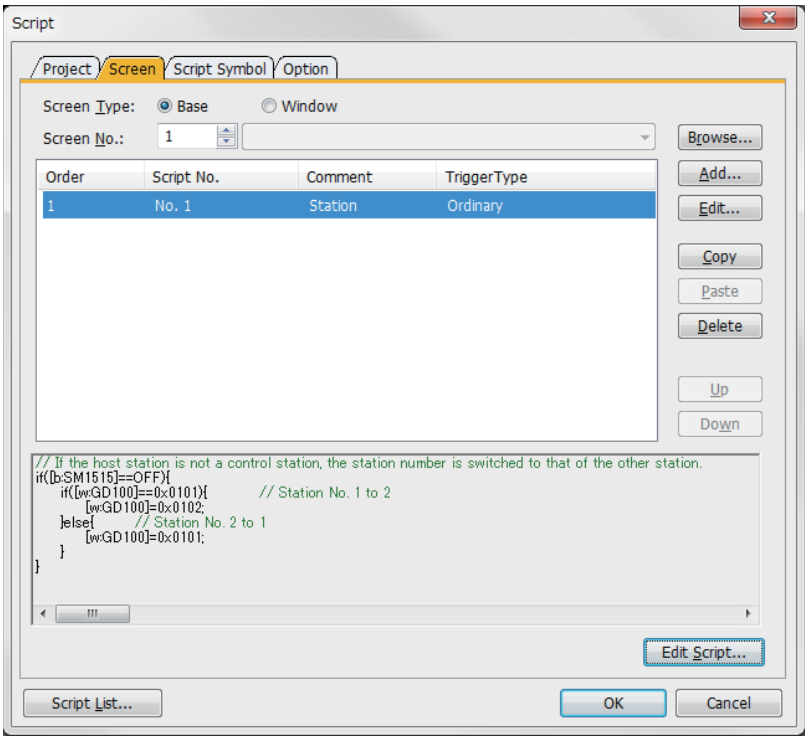

Method for using the screen changing function

- As a feature of this function, monitor screens are created for each station number. When the system switching occurs, the GOT can change the monitoring target to the control system PLC CPU on the other monitor screen.
- To achieve this, the script of the GOT monitors the special relay SM1515 (Control system identification flag) of the PLC CPU and stores the screen number corresponding to the latest station number of the control system into the screen switching devices.
- Precautions:

There are the following 8 different screen switching devices.Set the screen switching devices for all screens to be used.

(1) Base screen switching device
(2) Overlap window 1 switching device
(3) Overlap window 2 switching device
(4) Overlap window 3 switching device
(5) Overlap window 4 switching device
(6) Overlap window 5 switching device
(7) Superimpose window 1 switching device
(8) Superimpose window 2 switching device

■Setting method (For MELSECNET/H connection, MELSECNET/10 connection)

System configuration example 1: MELSECNET/H connection, MELSECNET/10 connection

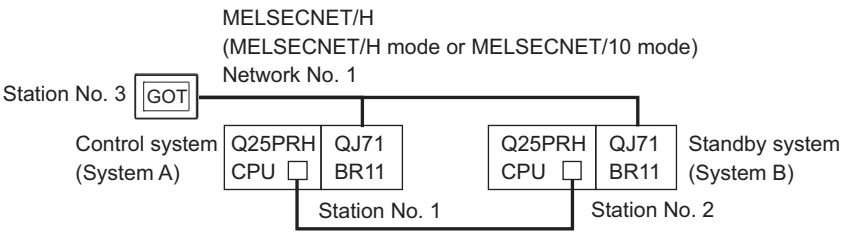

Connected module	Network No.	Station No.
MELSECNET/H network module of control system	1	1
MELSECNET/H network module of standby system		2
GOT connected to MELSECNET/H network or MELSECNET/10 network		3

1. Set the screen switching device of the base screen.

Select [Common] → [GOT Environmental Setting] → [Screen Switching/Window], and set the internal device GD100 as the base screen switching device.

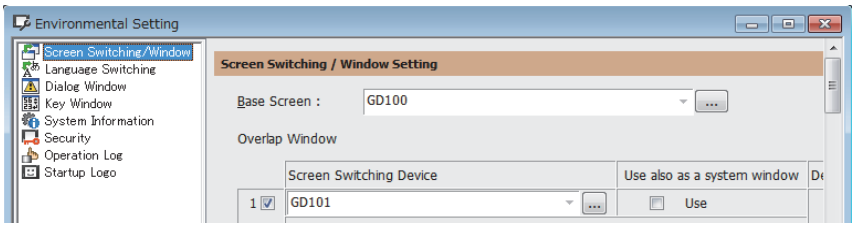

2. Set the trigger action.

Set the trigger action so that the station number is switched when the faulty station information (SW70) of MELSECNET/H turns ON in the project specified by choosing [Common] → [trigger action].

Condition 1	: SW70.b0 (while ON)	← When b0 is ON, Station No. 1 is abnormal.
Operation	: GD100=2	← Screen No. is changed to 2.

Condition 1	: SW70.b1 (while ON)	← When b1 is ON, Station No. 2 is abnormal.
Operation	: GD100=1	← Screen No. is changed to 1.

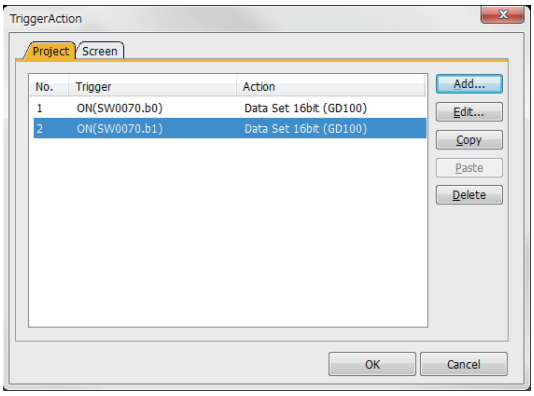

Make the setting so that the station number is switched when the faulty station information (GS231) from the station monitoring specified by selecting [Common] → [trigger action] turns ON.

Condition 1	: GS231.b0 (while ON)	← When b0 is ON, Station No. 1 is abnormal.
Operation	: GD100=2	← Screen No. is changed to 2.

Condition 1	: GS231.b1 (while ON)	← When b1 is ON, Station No. 2 is abnormal.
Operation	: GD100=1	← Screen No. is changed to 1.

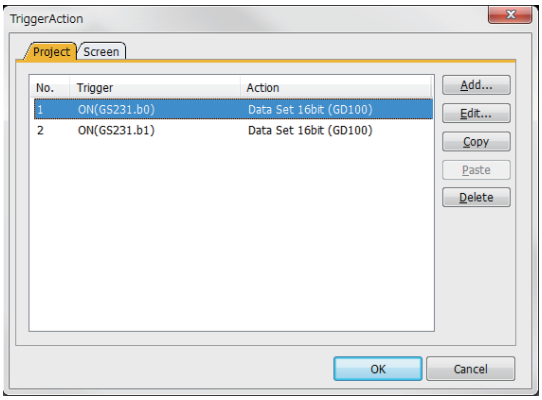

3. Set monitor screens.

For MELSECNET/H connection, MELSECNET/10 connection or Ethernet connection: (Common)

- Create a monitor screen with each object whose network setting is Station No. 1 on Screen No. 1 (1-1).
- Create a monitor screen with each object whose network setting is Station No. 2 on Screen No. 2 (1-2).

4. Change the screen switching device value in the script.

By selecting [Common] → [Script] → [Script], create a script for each monitor screen that checks the SM1515 status of the current monitor station, and if it is OFF (standby system), changes the station number switching device value.

Set the trigger type of the script as [Ordinary] or [Sampling(about 3s)].

Screen scripts for MELSECNET/H connection and MELSECNET/10 connection:

The same script can be used for MELSECNET/H connection, MELSECNET/10 connection and Ethernet connection.

```
// Script of Screen No. 1
// If Station 1 is not a control station, the screen is changed to that of Station 2.
if([1-1:b:SM1515]==OFF){
[w:GD100]=2;
}
```

```
// Script of Screen No. 2
// If Station 2 is not a control station, the screen is changed to that of Station 1.
if([1-2:b:SM1515]==OFF){
[w:GD100]=1;
}
```

Script screen of Screen No. 1

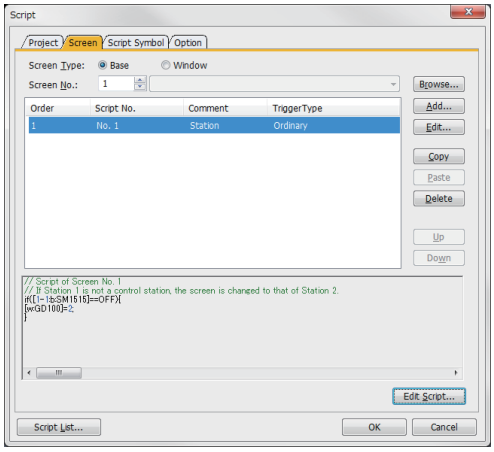

Script screen of Screen No. 2

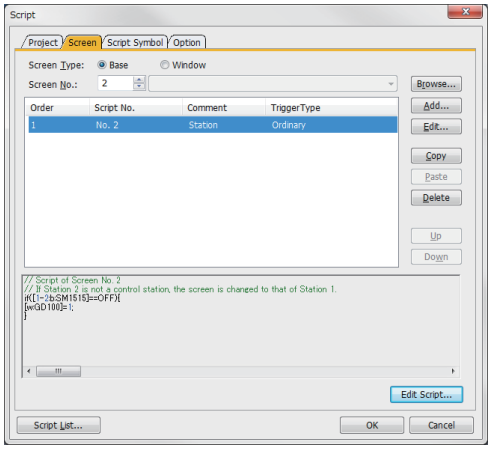

Point

When the MELSECNET/H network is connected to the redundant system only, SW56 (current control station) can be set as the screen switching device.

In this case, even if the system switching occurs, the GOT always monitors the station number that is currently the control station.

■Setting method (Ethernet connection)

System configuration example 2: Ethernet connection

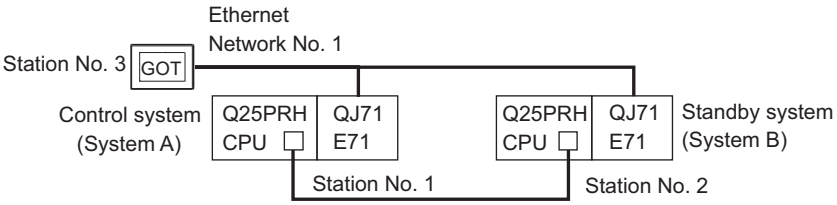

Connected module	Network No.	Station No.
Ethernet module of control system	1	1
Ethernet module of standby system		2
GOT connected to the Ethernet network		3

1. Set the screen switching device of the base screen.

Select [Common] → [GOT Environmental Setting] → [Screen Switching/Window], and set the internal device GD100 as the base screen switching device.

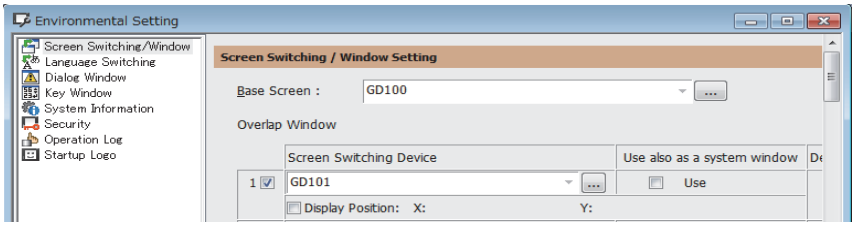

2. Set the trigger action.

Make the setting so that the station number is switched when the faulty station information (GS231) from the station monitoring specified by selecting [Common] → [trigger action] turns ON.

Condition 1	: GS231.b0 (while ON)	← When b0 is ON, Station No. 1 is abnormal.
Operation	: GD100=2	← Screen No. is changed to 2.

Condition 1	: GS231.b1 (while ON)	← When b1 is ON, Station No. 2 is abnormal.
Operation	: GD100=1	← Screen No. is changed to 1.

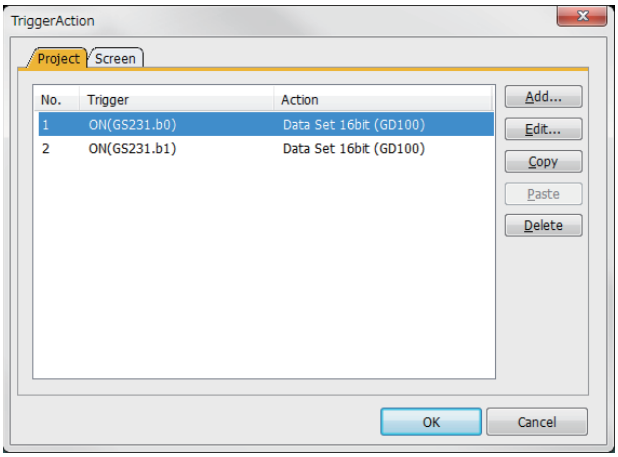

3. Set monitor screens.

For MELSECNET/H connection, MELSECNET/10 connection or Ethernet connection: (Common)

- Create a monitor screen with each object whose network setting is Station No. 1 on Screen No. 1 (1-1).
- Create a monitor screen with each object whose network setting is Station No. 2 on Screen No. 2 (1-2).

4. Change the screen switching device value in the script.

By selecting [Common] → [Script] → [Script], create a script for each monitor screen that checks the SM1515 status of the current monitor station, and if it is OFF (standby system), changes the station number switching device value.

Set the trigger type of the script as [Ordinary] or [Sampling(about 3s)].

Screen script for Ethernet connection:

The same script can be used for MELSECNET/H connection, MELSECNET/10 connection and Ethernet connection.

```
// Script of Screen No. 1
// If Station 1 is not a control station, the screen is changed to that of Station 2.
if([1-1:b:SM1515]==OFF){
[w:GD100]=2;
}
```

```
// Script of Screen No. 2
// If Station 2 is not a control station, the screen is changed to that of Station 1.
if([1-2:b:SM1515]==OFF){
[w:GD100]=1;
}
```

Script screen of Screen No. 1

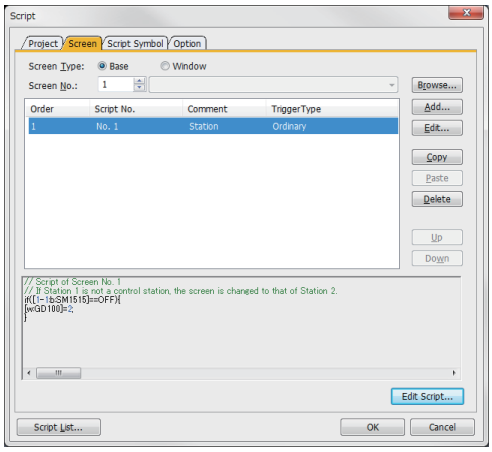

Script screen of Screen No. 2

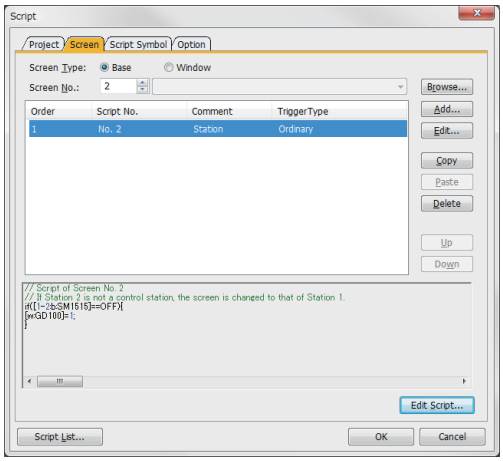

Precautions

Start of the redundant system

When connected to the redundant system, the GOT starts monitoring after the control system and standby system are decided, regardless of the starting order of the PLC systems A and B.
The GOT starts monitoring when both systems start.
(For the redundant system configured with a redundant extension base unit, the GOT starts monitoring the system that starts first, which is the control system.)
Power on the redundant system within the time set in the GOT (communication timeout time and number of retries) so that the GOT can start monitoring after the redundant system starts (after the control system is decided).
If the power supply does not start within the time set on the GOT, the GOT stops monitoring for safety reasons, and the following system alarm occurs.

- 451: The MELSEC redundant setting and actual system configuration do not match.

If the system alarm occurs, restart the GOT (reapply or reset the power supply) to start monitoring again.

System switching

■When system is switched by user program

- The communication path does not change, and the GOT follows the monitor.
- The system alarm is not displayed.

■When system switches because of a dislocated cable, etc.

- The communication path changes, and the GOT follows the monitor.
- "450 Path has changed or timeout occurred in redundant system." appears as the system alarm.

Redundant system configuration and operation mode

■System alarm display

With the following system configuration "451: MELSEC Redundant setting and actual system configuration do not match" will appear as the system alarm, and the GOT will not be able to correctly monitor the redundant system's CPU.
If the system alarm occurs, restart the GOT (reapply or reset the power supply) to start monitoring again.
<System configuration>

- System configuration with MELSEC redundant settings that do not match the actual redundant system
- System configuration in which the redundant system operation mode is not the backup mode

■Changing the MELSEC redundant settings

Always reset the GOT after changing the MELSEC redundant settings. If not reset, the changed MELSEC redundant settings will not be applied on the GOT.

When non-redundant system is monitored after setting MELSEC redundant settings

If the MELSEC redundant settings were set for a non-redundant system, the GOT will operate normally. In this case, if an abnormality (such as powering OFF, or communication timeout error) occurs at the PLC CPU for which the MELSEC redundant setting has been made, the PLC CPU may operate in a different way from the monitoring target change mode that was set in the MELSEC redundant setting.

When redundant system is monitored without making MELSEC redundant setting

When the MELSEC redundant setting is not made, the GOT does not automatically change the monitoring target even if system switching occurs in the redundant system. When the GOT is connected to the standby system, data written to a device are overwritten by the data of the control system, failing to be reflected.
In this case, when data are written to a device in the standby system normally, the system alarm "315 Device writing error. Correct device." is not detected.

CC-Link(ID) connection

When system switching is occurred by the following factors, data link control of CC-Link(ID) does not move from the master station of the new standby system to the standby master station of the new control system and the GOT cannot follow the monitor.

Make sure that the standby master station of the new control system should control data link.

For details of the ladder program for data link control, refer to the following manuals.

- MELSEC Q Series

📖QnPRHCPU User's Manual (Redundant System)

<Factors of system switching>

- Execution of the system switching instruction at the PLC side
- Execution of system switching operation using the engineering tool
- Execution of system switching request from other network modules.

<Why the GOT cannot follow the monitor>

When system switching is occurred by the above factors, data link control does not move to the standby master station because the master station of the new standby system can communicate with the GOT.

Also, the new control system is the standby master station without changing. Therefore, the GOT monitors the master station without following the new control system/new standby system and cannot monitor the redundant system.

Connection to the remote I/O station

■Monitor function

The GOT can monitor only the following GOT functions.

- Monitor function
- System monitor function

■Clock setting of the GOT

The GOT does not allow the PLC CPU clock of the master station to be set in the clock setting of the utility. The master station clock will not change even if the clock setting is made. Use GX Works2 or similar software to set the PLC CPU clock of the master station.

Connection to MELSECNET/H

For monitoring the QCPU redundant system when connecting to MELSECNET/H, use QCPU of function version D or later, with the upper five digits later than "07102". Also, use GX Developer of Version 8.29F or later.

Option functions including the ladder monitor

A message "Unable to communicate with CPU." is displayed when system switching occurs while an option function such as the ladder monitor is used.

Monitor display speed

When the control station of the MELSECNET/H network or MELSECNET/10 network fails and is taken over by a station outside the QCPU redundant system in the MELSECNET/H connection or MELSECNET/10 connection, , the timeout is detected as the system alarm.

If this occurs, the monitor display speed may slow down.

In the direct CPU connection (serial)

In the direct CPU connection (serial), the GOT fails to automatically change the monitoring target in the following cases.

- When the power supply to the CPU where the GOT is connected is OFF
- When the cable connecting the GOT with the CPU is broken
- When the tracking is disabled

When the QCPU redundant system is in the debug mode

When the QCPU redundant system is in the debug mode, do not make the MELSEC redundant system setting for the GOT side when connecting the GOT.

3.3 MELSEC Redundant Setting

The following explains the setting for automatically change the monitoring target of the GOT when monitoring a RCPU redundant system, QCPU redundant system.

Point

Before making the MELSEC redundant setting
In the MELSEC redundant setting, do not set stations other than redundant CPUs.

1. Select [Common] → [Controller Setting] → [MELSEC Redundant] from the menu.
2. The setting dialog box appears. Make the settings with reference to the following explanation.
3. Make the settings for the MELSEC redundant setting.

In the MELSEC Redundant Setting dialog box, settings can be made for each channel of the controller.

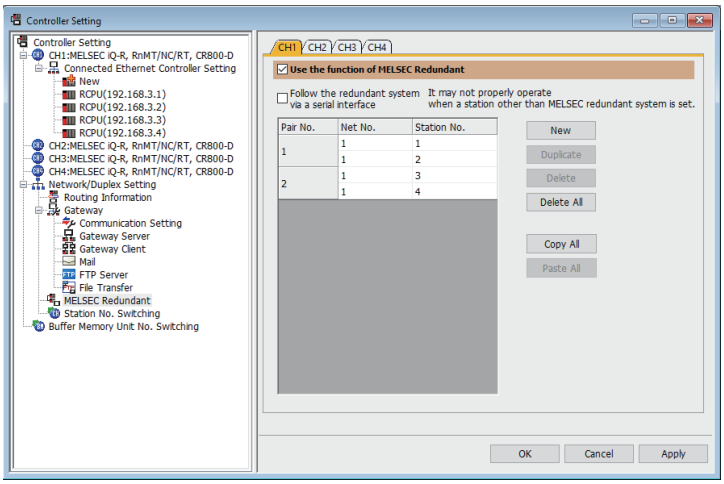

(Example: Ethernet connection (Station No. 5), redundant CPU pair No. 1 and No. 2, redundant CPU station No. 1 to 4)

Item		Contents	Model
CH1 to CH4		Select a tab of the CH No. for the MELSEC redundant setting.	GT27 GT25 GT23 GS25
Follow the redundant system via a serial interface		Select this item to monitor the control system as a host station at serial connection.	
Pair No.*1	Net No.	Set the network No. (1 to 225) for each of pair numbers (1 to 64). Upper row: Setting for the first redundant CPU. Lower row: Setting for the second redundant CPU. (The same value as the value set for the first redundant CPU is displayed)	
	Station No.	Set the station No. (1 to 120) of the redundant CPU for each of pair numbers (1 to 64). Upper row: Setting for the first redundant CPU. Lower row: Setting for the second redundant CPU. (The value of "Setting for the first redundant CPU" + 1 is displayed)	
New		Create a new pair No.	
Duplicate		Copies one setting of the selected pair number to append it at the last line.	
Delete		Deletes one setting of the selected pair. After deletion, the succeeding pair numbers are renumbered to fill the deleted pair number.	
Delete All		Deletes the setting of all pair numbers.	
Copy All		Copies the MELSEC redundant setting on the selected CH No. tab.	
Paste All		Pastes the copied MELSEC redundant setting in the selected CH No. tab.	

*1 For details of *1, refer to the explanation below.

*1 Pair number

Redundant CPU pair means the redundant CPUs (System A / System B) in the redundant system configuration.

Pair number is the number assigned to each redundant CPU pair.

Example: Ethernet connection in the RCPU redundant system (Pair No. 1 and Pair No. 2)

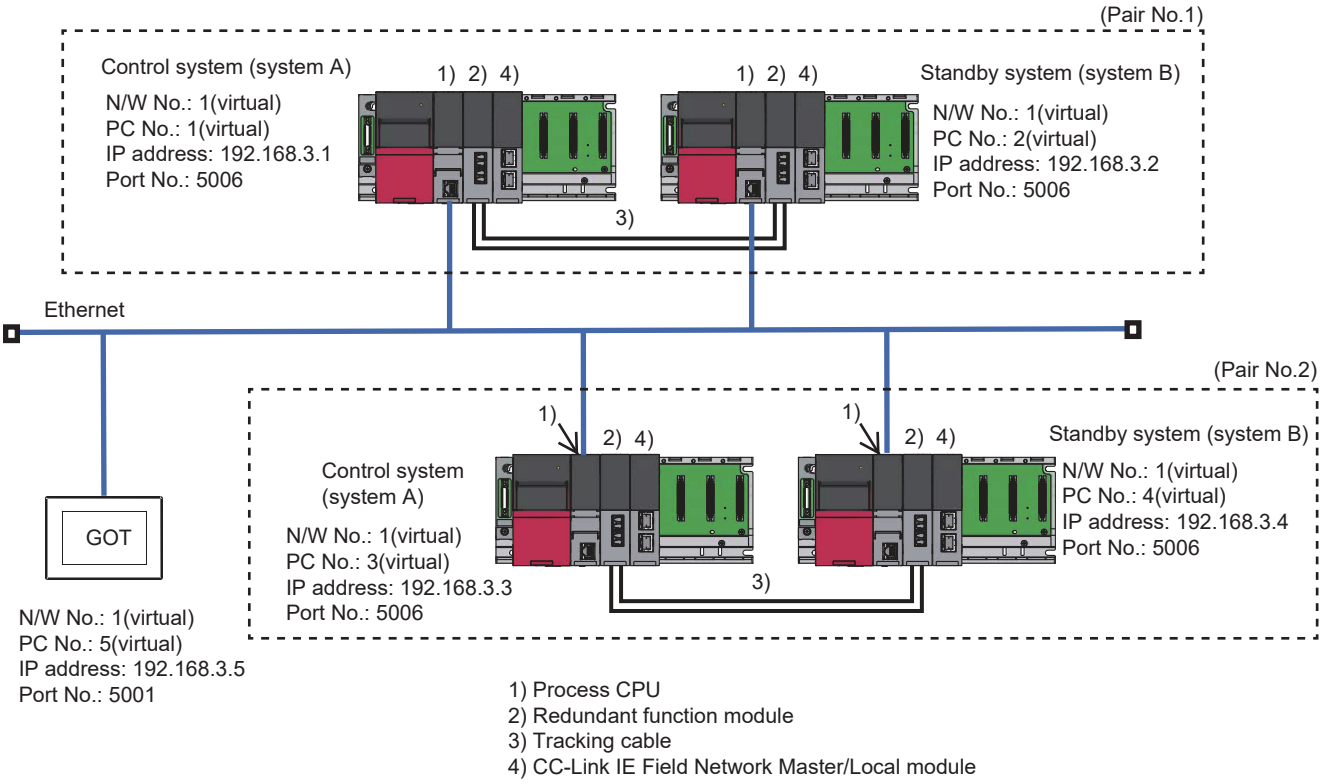

Point

Precautions for making MELSEC redundant setting

Pay attention to the following items when making the MELSEC redundant setting.

- Pairing of the last station No. and station No. 1 (Example: Station No. 64 and station No. 1) is not allowed.
- Make sure that the QCPU in the station for which MELSEC redundant setting is made is a redundant CPU. If any of the QCPUs to which the MELSEC redundant setting is made is not a redundant CPU, the GOT fails to automatically change the monitoring target to the control system when the system is switched.
- When making the MELSEC redundant setting for MELSECNET/H, MELSECNET/10, or Ethernet connections, check the station Nos. of network modules before the setting. If the settings of the MELSEC redundant setting and the actual network module station Nos. are not matched, the GOT fails to automatically change the monitoring target to the control system when the system is switched.
- GOT supports the backup mode, which is the redundant mode of the RCPU redundant system, and does not support the process mode and separate mode.
- GOT supports the backup mode, which is the operation mode of the QCPU redundant system, and does not support the debug mode and separate mode.

4 ETHERNET CONNECTION

- Page 217 Connectable Model List
- Page 227 System Configuration
- Page 248 GOT Side Settings
- Page 261 PLC Side Setting
- Page 368 Precautions

4.1 Connectable Model List

PLC/Motion CPU

The following table shows the connectable models.

Series	Model name	Clock	Communication type	Connectable model	Refer to
MELSEC iQ-R Series	R00CPU	○	Ethernet	GT27 GT25 GT23 GT21 07W GT21 04R GT21 03P 04P ET/R4 GS25 GS21	☞ Page 227 Connection to Ethernet module ☞ Page 234 Connection to Built-in Ethernet port CPU or C Controller module ☞ Page 240 Connection to CC-Link IE TSN-equipped module ☞ Page 242 Connection to Motion module ☞ Page 246 Connection through a servo amplifier
	R01CPU				
	R02CPU				
	R04CPU				
	R08CPU				
	R16CPU				
	R32CPU				
	R120CPU				
	R08PCPU*1	○	Ethernet	GT27 GT25 GT23 GT21 07W GT21 04R GT21 03P 04P ET/R4 GS25 GS21	☞ Page 227 Connection to Ethernet module ☞ Page 234 Connection to Built-in Ethernet port CPU or C Controller module
	R16PCPU*1				
	R32PCPU*1				
	R120PCPU*1				
	R04ENCPU	○	Ethernet	GT27 GT25 GT23 GT21 07W GT21 04R GT21 03P 04P ET/R4 GS25 GS21	☞ Page 227 Connection to Ethernet module ☞ Page 234 Connection to Built-in Ethernet port CPU or C Controller module ☞ Page 240 Connection to CC-Link IE TSN-equipped module ☞ Page 242 Connection to Motion module ☞ Page 246 Connection through a servo amplifier
	R08ENCPU				
	R16ENCPU				
	R32ENCPU				
	R120ENCPU				
	R08PSFCPU *2	○	Ethernet	GT27 GT25 GT23 GT21 07W GT21 04R GT21 03P 04P ET/R4 GS25 GS21	☞ Page 227 Connection to Ethernet module ☞ Page 234 Connection to Built-in Ethernet port CPU or C Controller module
	R16PSFCPU *2				
	R32PSFCPU *2				
	R120PSFCPU *2				

Series	Model name	Clock	Communication type	Connectable model	Refer to
MELSEC iQ-R Series	R08SFCPU*3	○	Ethernet	GT27 GT25 GT23 GT21 07W GT21 04R GT21 03P 04P ET/R4 GS25 GS21	☞ Page 227 Connection to Ethernet module ☞ Page 234 Connection to Built-in Ethernet port CPU or C Controller module ☞ Page 240 Connection to CC-Link IE TSN-equipped module ☞ Page 242 Connection to Motion module
	R16SFCPU*3				
	R32SFCPU*3				
	R120SFCPU*3				
Motion CPU (MELSEC iQ-R Series)	R16MTCPU	○	Ethernet	GT27 GT25 GT23 GT21 07W GT21 04R GT21 03P 04P ET/R4 GS25 GS21	☞ Page 227 Connection to Ethernet module ☞ Page 234 Connection to Built-in Ethernet port CPU or C Controller module
	R32MTCPU				
	R64MTCPU				
C Controller module (MELSEC iQ-R Series)	R12CCPU-V	○	Ethernet	GT27 GT25 GT23 GT21 07W GT21 04R GT21 03P 04P ET/R4 GS25 GS21	☞ Page 234 Connection to Built-in Ethernet port CPU or C Controller module ☞ Page 240 Connection to CC-Link IE TSN-equipped module ☞ Page 242 Connection to Motion module ☞ Page 246 Connection through a servo amplifier
MELSECWinCPU (MELSEC iQ-R Series)	R102WCPU-W	×	Ethernet	GT27 GT25 GT23 GT21 07W GT21 04R GT21 03P 04P ET/R4 GS25 GS21	☞ Page 234 Connection to Built-in Ethernet port CPU or C Controller module ☞ Page 240 Connection to CC-Link IE TSN-equipped module
CNC C80	R16NCCPU-S1	○	Ethernet	GT27 GT25 GT23 GS25	☞ Page 227 Connection to Ethernet module ☞ Page 237 Connection to Display I/F
Robot controller (MELSEC iQ-R Series)	CR800-R(R16RTCPU)	○	Ethernet	GT27 GT25 GT23 GT21 07W GT21 04R GT21 03P 04P ET/R4 GS25 GS21	☞ Page 227 Connection to Ethernet module ☞ Page 234 Connection to Built-in Ethernet port CPU or C Controller module
CC-Link IE Field Network head module	RJ72GF15-T2	×	Ethernet	GT27 GT25 GT23 GT21 07W GT21 04R GT21 03P 04P ET/R4 GS25 GS21	☞ Page 227 Connection to Ethernet module

Series	Model name	Clock	Communication type	Connectable model	Refer to
MELSEC iQ-F Series	FX5U*5	○	Ethernet	GT27 GT25 GT23 GT21 07W GT21 04R GT21 03P 04P ET/R4 GS25 GS21	☞ Page 227 Connection to Ethernet module ☞ Page 234 Connection to Built-in Ethernet port CPU or C Controller module ☞ Page 240 Connection to CC-Link IE TSN-equipped module ☞ Page 242 Connection to Motion module ☞ Page 246 Connection through a servo amplifier
	FX5UC*5				
	FX5UJ*5	○	Ethernet	GT27 GT25 GT23 GT21 07W GT21 04R GT21 03P 04P ET/R4 GS25 GS21	☞ Page 227 Connection to Ethernet module ☞ Page 234 Connection to Built-in Ethernet port CPU or C Controller module ☞ Page 246 Connection through a servo amplifier
	FX5S	○	Ethernet	GT27 GT25 GT23 GT21 07W GT21 04R GT21 03P 04P ET/R4 GS25 GS21	☞ Page 234 Connection to Built-in Ethernet port CPU or C Controller module ☞ Page 246 Connection through a servo amplifier

Series	Model name	Clock	Communication type	Connectable model	Refer to
MELSEC-Q (Q mode)	Q00JCPU	○	Ethernet	GT27 GT25 GT23 GT21 07W GT21 04R GT21 03P 04P ET/R4 GS25 GS21	☞ Page 227 Connection to Ethernet module
	Q00CPU*4				
	Q01CPU*4				
	Q02CPU*4				
	Q02HCPU*4 Q06HCPU*4 Q12HCPU*4 Q25HCPU*4				
	Q02PHCPU Q06PHCPU Q12PHCPU Q25PHCPU	○	Ethernet	GT27 GT25 GT23 GS25	☞ Page 227 Connection to Ethernet module
	Q12PRHCPU (Main base)				
	Q25PRHCPU (Main base)				
	Q12PRHCPU (Extension base)				
	Q25PRHCPU (Extension base)				
	Q00UJCPU Q00UJCPU-S8	○	Ethernet	GT27 GT25 GT23 GT21 07W GT21 04R GT21 03P 04P ET/R4 GS25 GS21	☞ Page 227 Connection to Ethernet module
	Q00UCPU Q01UCPU Q02UCPU Q03UDCPU				
	Q04UDHCPU Q06UDHCPU Q10UDHCPU Q13UDHCPU Q20UDHCPU Q26UDHCPU				
	Q03UDECPU Q04UDEHCPU Q06UDEHCPU Q10UDEHCPU Q13UDEHCPU Q20UDEHCPU Q26UDEHCPU Q50UDEHCPU Q100UDEHCPU	○	Ethernet	GT27 GT25 GT23 GT21 07W GT21 04R GT21 03P 04P ET/R4 GS25 GS21	☞ Page 227 Connection to Ethernet module ☞ Page 234 Connection to Built-in Ethernet port CPU or C Controller module
	Q03UDVCPU Q04UDVCPU Q06UDVCPU Q13UDVCPU Q26UDVCPU	○	Ethernet	GT27 GT25 GT23 GT21 07W GT21 04R GT21 03P 04P ET/R4 GS25 GS21	☞ Page 227 Connection to Ethernet module ☞ Page 234 Connection to Built-in Ethernet port CPU or C Controller module ☞ Page 246 Connection through a servo amplifier
C Controller module (Q Series)	Q12DCCPU-V *6 Q24DHCCPU-V/VG Q24DHCCPU-LS Q26DHCCPU-LS	○	Ethernet	GT27 GT25 GT23 GT21 07W GT21 04R GT21 03P 04P ET/R4 GS25 GS21	☞ Page 234 Connection to Built-in Ethernet port CPU or C Controller module
MELSEC-QS	QS001CPU	○	Ethernet	GT27 GT25 GT23 GS25	☞ Page 227 Connection to Ethernet module

Series	Model name	Clock	Communication type	Connectable model	Refer to
MELSEC-L	L02CPU L06CPU L26CPU L26CPU-BT L02CPU-P L06CPU-P L26CPU-P L26CPU-PBT	○	Ethernet	GT27 GT25 GT23 GT21 07W GT21 04R GT21 03P 04P ET/R4 GS25 GS21	☞ Page 227 Connection to Ethernet module ☞ Page 234 Connection to Built-in Ethernet port CPU or C Controller module ☞ Page 246 Connection through a servo amplifier
	L02SCPU L02SCPU-P	○	Ethernet	GT27 GT25 GT23 GT21 07W GT21 04R GT21 03P 04P ET/R4 GS25 GS21	☞ Page 227 Connection to Ethernet module
MELSEC-Q (A mode)	Q02CPU-A*7 Q02HCPU-A*7 Q06HCPU-A*7	○	Ethernet	GT27 GT25 GT23 GS25	☞ Page 227 Connection to Ethernet module
MELSEC-QnA (QnACPU)	Q2ACPU *7 Q2ACPU-S1*7 Q3ACPU*7 Q4ACPU*7 Q4ARCPU*7	○	Ethernet	GT27 GT25 GT23 GS25	☞ Page 227 Connection to Ethernet module
MELSEC-QnA (QnASCPU)	Q2ASCPU Q2ASCPU-S1 Q2ASHCPU Q2ASHCPU-S1	○	Ethernet	GT27 GT25 GT23 GS25	☞ Page 227 Connection to Ethernet module
MELSEC-A (AnCPU)	A2UCPU A2UCPU-S1 A3UCPU A4UCPU A2ACPU A2ACPUP21 A2ACPUR21 A2ACPU-S1 A2ACPUP21-S1 A2ACPUR21-S1 A3ACPU A3ACPUP21 A3ACPUR21 A1NCPU A1NCPUP21 A1NCPUR21 A2NCPU A2NCPUP21 A2NCPUR21 A2NCPU-S1 A2NCPUP21-S1 A2NCPUR21-S1 A3NCPU A3NCPUP21 A3NCPUR21	○	Ethernet	GT27 GT25 GT23 GS25	☞ Page 227 Connection to Ethernet module
MELSEC-A (AnSCPU)	A2USCPU	○	Ethernet	GT27 GT25 GT23 GS25	☞ Page 227 Connection to Ethernet module
	A2USCPU-S1				
	A2USHCPU-S1				
	A1SCPU				
	A1SCPUC24-R2				
	A1SHCPU				
	A2SCPU				
	A2SCPU-S1				
	A2SHCPU				
	A2SHCPU-S1				
	A1SJCPU				
	A1SJCPU-S3				
	A1SJHCPU				

Series	Model name	Clock	Communication type	Connectable model	Refer to
MELSEC-A	A0J2HCPU	×	Ethernet	GT27 GT25 GT23 GS25	☞ Page 227 Connection to Ethernet module
	A0J2HCPUP21				
	A0J2HCPUR21				
	A0J2HCPU-DC24				
	A2CCPU	○	-	-	-
	A2CCPUP21				
	A2CCPUR21				
	A2CCPUC24				
	A2CCPUC24-PRF				
	A2CJCPU-S3				
	A1FXCPU				
Motion CPU (Q Series)	Q172CPU*9*10	○	Ethernet	GT27 GT25 GT23 GT21 07W GT21 04R GT21 03P 04P ET/R4 GS25 GS21	☞ Page 227 Connection to Ethernet module
	Q173CPU*9*10				
	Q172CPUN*9				
	Q173CPUN*9				
	Q172HCPU				
	Q173HCPU				
	Q172DCPU				
	Q173DCPU				
	Q172DCPU-S1	○	Ethernet	GT27 GT25 GT23 GT21 07W GT21 04R GT21 03P 04P ET/R4 GS25 GS21	☞ Page 227 Connection to Ethernet module ☞ Page 239 Connection to PERIPHERAL I/F
	Q173DCPU-S1				
	Q172DSCPU				
	Q173DSCPU				
	Q170MCPU*11				
	Q170MSCPU*12				
	Q170MSCPU-S1*12				
	MR-MQ100				
Motion CPU (A Series)	A273UCPU	○	Ethernet	GT27 GT25 GT23 GS25	☞ Page 227 Connection to Ethernet module
	A273UHCPU				
	A273UHCPU-S3				
	A373UCPU				
	A373UCPU-S3				
	A171SCPU				
	A171SCPU-S3				
	A171SCPU-S3N				
	A171SHCPU				
	A171SHCPUN				
	A172SHCPU				
	A172SHCPUN				
	A173UHCPU				
	A173UHCPU-S1				
MELSEC-WS	WS0-CPU0	×	-	-	-
	WS0-CPU1				
	WS0-CPU3				
MELSECNET/H Remote I/O station	QJ72LP25-25	×	Ethernet	GT27 GT25 GT23 GT21 07W GT21 04R GT21 03P 04P ET/R4 GS25 GS21	☞ Page 227 Connection to Ethernet module
	QJ72LP25G				
	QJ72BR15				
CC-Link IE Field Network head module	LJ72GF15-T2	×	-	-	-
CC-Link IE Field Network Ethernet adapter module	NZ2GF-ETB	×	CC-Link IE	-	☞ Page 238 Connection to NZ2GF-ETB
		×	Ethernet	GT27 GT25 GT23 GT21 07W GT21 04R GT21 03P 04P ET/R4 GS25 GS21	

Series	Model name	Clock	Communication type	Connectable model	Refer to
CNC C70	Q173NCCPU	○	Ethernet	GT27 GT25 GT23 GS25	☞ Page 237 Connection to Display I/F
Robot controller (Q Series)	CRnQ-700 (Q172DRCPU) *13	○	Ethernet	GT27 GT25 GT23 GT21 07W GT21 04R GT21 03P 04P ET/R4 GS25 GS21	☞ Page 227 Connection to Ethernet module
	CR750-Q (Q172DRCPU) *13				
	CR751-Q (Q172DRCPU) *13				
	CR800-Q (Q172DSRCPU) *14				
MELSEC-FX	FX0	×	-	-	-
	FX0S				
	FX0N				
	FX1				
	FX2	×			
	FX2C				
	FX1S	○			
	FX1N				
	FX2N				
	FX1NC				
	FX2NC	×			
	FX3S*15	○	Ethernet	GT27 GT25 GT23 GT21 07W GT21 04R GT21 03P 04P ET/R4 GS25 GS21	☞ Page 227 Connection to Ethernet module
	FX3G*15				
	FX3GC*15				
	FX3GE				
	FX3U*15				
	FX3UC*15				

*1 Mount a redundant function module R6RFM next to the RnPCPU on the base unit when building a redundant system.
*2 Mount the SIL2 function module R6PSFM and redundant function module R6RFM next to the RnPSFCPU on the base unit.
*3 Mount a safety function module R6SFM next to the RnSFCPU on the base unit.
The RnSFCPU and the safety function module R6SFM must have the same pair version.
If their pair versions differ, the RnSFCPU does not operate.
*4 When in multiple CPU system configuration, use CPU function version B or later.
*5 When using FX5-ENET or FX5-ENET/IP, use firmware Ver.1.240 or later.
*6 Use a module with the upper five digits later than 12042.
*7 Combination with the Ethernet module is restricted.
☞ Page 225 Ethernet module
*8 If the A series Ethernet module is applied to the QnACPU, the GOT can monitor the devices as the same as the case of AnACPU.
However, the following devices cannot be monitored.
• Devices added to QnACPU
• Latch relays (L) and step relays (S)
(In case of QnACPU, the latch relay (L) and step relay (S) are different from the internal relay. However, whichever is specified, an access is made to the internal relay.)
• File register (R)
*9 When using SV13, SV22, or SV43, use a Motion CPU with the following version of OS installed.
• SW6RN-SV13Q□: 00H or later
• SW6RN-SV22Q□: 00H or later
• SW6RN-SV43Q□: 00B or later
*10 Use main modules with the following product numbers.
• Q172CPU: Product number N******* or later
• Q173CPU: Product number M******* or later
*11 When using Ethernet module, only the first step can be used on the extension base unit (Q52B/Q55B).
*12 When using Ethernet module, the extension base unit (Q5□B/Q6□B) can be used.
*13 The Display I/F of the robot controller cannot be connected.
Ethernet connections can be established via either of the following.
• Ethernet module (QJ71E71)
• Ethernet port built in the PLC CPU
*14 Ethernet connections can be established via the PERIPHERAL I/F of the robot controller or either of the following.
• Ethernet module (QJ71E71)
• Ethernet port built in the PLC CPU
*15 The supported version of the main units varies depending on the Ethernet module to be used as shown below.

Ethernet module	FX3U(C)	FX3G(C)	FX3S
FX3U-ENET-L	Ver. 2.21 or later	FX3U-ENET-L is not supported.	
FX3U-ENET	Ver. 2.21 or later	FX3U-ENET is not supported.	
FX3U-ENET-ADP	Ver. 3.10 or later	Ver. 2.00 or later	Ver. 1.00 or later

Ethernet module

CPU series	Communication module
MELSEC iQ-R Series	RJ71EN71 *3 RJ71GN11-T2 *4 RJ71GN11-EIP*4 RD78G4 *4*5, RD78G8 *4*5, RD78G16 *4*5, RD78G32 *4*5, RD78G64 *4*5, RD78GHV *4*5, RD78GHW *4*5
C Controller module (MELSEC iQ-R Series) *10	RJ71GN11-T2 RD78G4, RD78G8, RD78G16, RD78G32, RD78G64, RD78GHV, RD78GHW
MELSECWinCPU (MELSEC iQ-R Series)	RJ71GN11-T2
MELSEC iQ-F Series	FX5-ENET *6*7 FX5-ENET/IP *6*7 FX5-CCLGN-MS*12 FX5-40SSC-G*6*11, FX5-80SSC-G*6*11
Motion CPU (MELSEC iQ-R Series) CNC C80 (R16NCCPU-S1) CR800-R (R16RTCPU) CC-Link IE Field Network head module (MELSEC iQ-R Series)	RJ71EN71 *3
MELSEC-Q (Q mode) MELSEC-QS Motion CPU (Q Series) CNC C70 Robot controller (CRnQ-700) CR800-Q (Q172DSRCPU) C Controller module (MELSEC-Q Series)	QJ71E71-100, QJ71E71-B5, QJ71E71-B2, QJ71E71
MELSEC-QnA (QnACPU) *1 MELSEC-QnA (QnASCPU) *1	AJ71QE71N3-T *2, AJ71QE71N-B5 *2, AJ71QE71N-B2 *2, AJ71QE71N-T *2, AJ71QE71N-B5T *2, AJ71QE71, AJ71QE71-B5 A1SJ71QE71N3-T *2*8, A1SJ71QE71N-B5 *2*8, A1SJ71QE71N-B2 *2*8, A1SJ71QE71N-T *2*8, A1SJ71QE71N-B5T *2*8, A1SJ71QE71-B5 *8, A1SJ71QE71-B2 *8
MELSEC-Q (A mode) MELSEC-A (AnCPU) MELSEC-A (AnSCPU) Motion CPU (A Series)	AJ71E71N3-T, AJ71E71N-B5, AJ71E71N-B2, AJ71E71N-T, AJ71E71N-B5T, AJ71E71-S3 A1SJ71E71N3-T *9, A1SJ71E71N-B5 *9, A1SJ71E71N-B2 *9, A1SJ71E71N-T *9, A1SJ71E71N-B5T *9, A1SJ71E71-B5-S3 *9, A1SJ71E71-B2-S3 *9
MELSEC-FX	FX3U-ENET-L, FX3U-ENET, FX3U-ENET-ADP
CC-Link IE Field Network Ethernet adapter module	NZ2GF-ETB
MELSEC-L	LJ71E71-100

*1 If the A series Ethernet module is applied to the QnACPU, the GOT can monitor the devices as the same as the case of AnACPU. However, the following devices cannot be monitored.
- Devices added to QnACPU
- Latch relays (L) and step relays (S)

(In case of QnACPU, the latch relay (L) and step relay (S) are different from the internal relay. However, whichever is specified, an access is made to the internal relay.)
- File register (R)

*2 Use an Ethernet module and PLC CPU with function version B or later.

*3 Use firmware version 12 or later when building a redundant system.

*4 The following shows the connectable PLC CPUs and their firmware versions for connection with each module.

Model	Firmware version			
	Connecting to RJ71GN11-T2	Connecting to RJ71GN11-EIP	Connecting to RD78G4, RD78G8, RD78G16, RD78G32, or RD78G64	Connecting to RD78GHV or RD78GHW
R00CPU	11 or later	29 or later	12 or later	14 or later
R01CPU				
R02CPU				
R04CPU	43 or later	62 or later	44 or later	46 or later
R08CPU				
R16CPU				
R32CPU				
R120CPU				
R04ENCPU				
R08ENCPU				
R16ENCPU				
R32ENCPU				
R120ENCPU				
R08SFCPU	20 or later	Unavailable	21 or later	21 or later
R16SFCPU				
R32SFCPU				
R120SFCPU				

*5 Use a Motion module with software version 06 or later.
For the PLC CPU firmware version and GX Works3 version that support the Motion module, refer to the following.
MELSEC iQ-R Motion Module User's Manual (Application)

*6 Not available to FX5UJ and FX5S.

*7 For FX5-ENET and FX5-ENET/IP, use firmware Ver.1.100 or later.
For FX5U, FX5UC, and FX5UJ that support FX5-ENET or FX5-ENET/IP, use firmware Ver.1.240 or later.

*8 Only available for MELSEC-QnA (QnASCPU).

*9 Only available for MELSEC-Q (A mode), MELSEC-A (AnSCPU), and Motion CPU (A series) small type.

*10 When connecting to the CC-Link IE TSN master/local module or Motion module, use the C Controller module (MELSEC iQ-R series) with firmware version 15 or later.

*11 For FX5U and FX5UC that support FX5-40SSC-G or FX5-80SSC-G, use firmware Ver.1.230 or later.

*12 Not available to FX5S.

4.2 System Configuration

Connection to Ethernet module

When connecting to MELSEC iQ-R series, Motion CPU (MELSEC iQ-R series), MELSEC-Q, QS, QnA, A, Motion CPU (Q series), or MELSEC-L

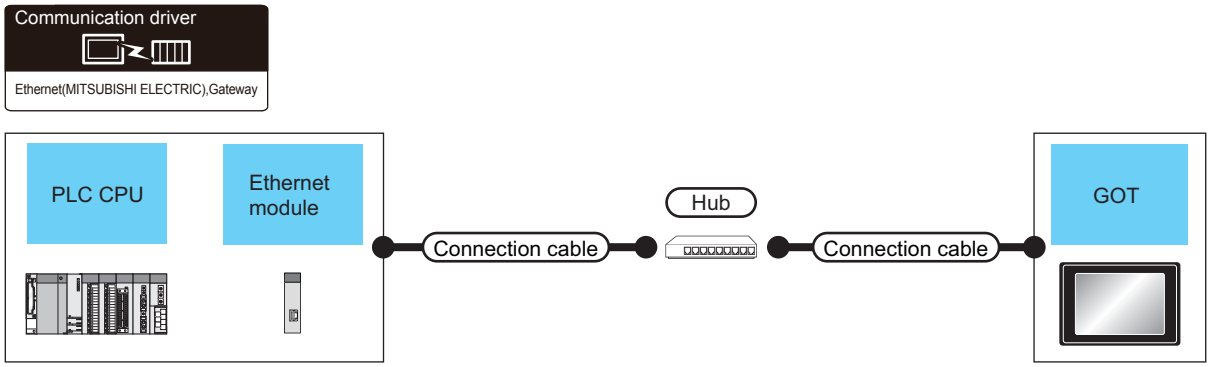

PLC			Connection cable*1	Maximum segment length*2	GOT		Max. pieces of equipment connected		
Model name	Ethernet module*3*4	Communication type	Cable model		Option device*6	Model	GOT*7*9	Unit*8	
								UDP	TCP
MELSEC iQ-R Series Motion CPU (MELSEC iQ-R Series)	RJ71EN71	Ethernet	• 100BASE-TX Shielded twisted pair cable (STP) or unshielded twisted pair cable (UTP) of category 5 or higher • 10BASE-T Shielded twisted pair cable (STP) or unshielded twisted pair cable (UTP) of category 3 or higher	100m	- (Built into GOT)	GT27 GT25 GT23 GT21 07W GT21 04R GT21 03P 04P ET/R4 GS25 GS21	119 (16 or less recommended)	119	17
					GT25-J71E71-100	GT27 GT25			
CNC C80 (R16NCCPU-S1) CR800-R(R16RTCPU) CC-Link IE Field Network head module(MELSEC iQ-R Series)	RJ71EN71	Ethernet			- (Built into GOT)	GT27 GT25 GT23 GS25			
					GT25-J71E71-100	GT27 GT25			

PLC			Connection cable*1	Maximum segment length*2	GOT		Max. pieces of equipment connected		
Model name	Ethernet module*3*4	Communication type	Cable model		Option device*6	Model	GOT*7*9	Unit*8	
								UDP	TCP
MELSEC-Q (Q mode) Motion CPU (Q Series) *5 Robot controller (CRnQ-700) CR800-Q (Q172DSRCPU)	QJ71E71-100 QJ71E71-B5 QJ71E71-B2 QJ71E71	Ethernet	• 100BASE-TX Shielded twisted pair cable (STP) or unshielded twisted pair cable (UTP) of category 5 or higher • 10BASE-T Shielded twisted pair cable (STP) or unshielded twisted pair cable (UTP) of category 3 or higher	100m	- (Built into GOT)	GT27 GT25 GT23 GT21 07W GT21 04R GT21 03P 04P ET/R4 GS25 GS21	63 (16 or less recommended)	63	17
					GT25-J71E71-100	GT27 GT25			
MELSEC-QS					- (Built into GOT)	GT27 GT25 GS25			
					GT25-J71E71-100	GT27 GT25			
MELSEC-QnA	AJ71QE71N3-T AJ71QE71N-B5 AJ71QE71N-B2 AJ71QE71N-T AJ71QE71N-B5T AJ71QE71 AJ71QE71-B5 A1SJ71QE71N3-T A1SJ71QE71N-B5 A1SJ71QE71N-B2 A1SJ71QE71N-T A1SJ71QE71N-B5T A1SJ71QE71-B5 A1SJ71QE71-B2	Ethernet			- (Built into GOT)	GT27 GT25 GS25	63 (4 or less recommended)	8	-
					GT25-J71E71-100	GT27 GT25			
MELSEC-A MELSEC-Q (A mode) Motion CPU (A Series)	AJ71E71N3-T AJ71E71N-B5 AJ71E71N-B2 AJ71E71N-T AJ71E71N-B5T AJ71E71-S3 A1SJ71E71N3-T A1SJ71E71N-B5 A1SJ71E71N-B2 A1SJ71E71N-T A1SJ71E71N-B5T A1SJ71E71-B5-S3 A1SJ71E71-B2-S3	Ethernet			- (Built into GOT)	GT27 GT25 GS25	63 (4 or less recommended)	8	-
					GT25-J71E71-100	GT27 GT25			
MELSEC-L	LJ71E71-100	Ethernet			- (Built into GOT)	GT27 GT25 GT23 GT21 07W GT21 04R GT21 03P 04P ET/R4 GS25 GS21	63 (16 or less recommended)	63	17
					GT25-J71E71-100	GT27 GT25			

*1 Only available for MELSEC-Q (A mode), MELSEC-A (AnSCPU), and Motion CPU (A series) small type.
Connect the cable to the Ethernet module, hub, transceiver, wireless LAN adapter (NZ2WL-JPA or NZ2WL-JPS), or other system equipment according to the Ethernet network system used.
Use cables, connectors, and hubs that meet the IEEE802.3 10BASE-T/100BASE-TX standard.
When only one GOT is connected, the GOT can be directly connected to the controller without a hub.

*2 Length between a hub and a node
The maximum length depends on the Ethernet equipment used.
The following shows the number of the connectable nodes when a repeater hub is used.
• 10BASE-T: Up to 4 nodes for a cascade connection (500 m)
• 100BASE-TX: UP to 2 nodes for a cascade connection (205 m)
When switching hubs are used, the cascade connection between the switching hubs has no logical limit for the number of cascades.
For the limit, contact the switching hub manufacturer.

*3 For the system configuration of the Ethernet module, refer to the following manuals.
📖Q Corresponding Ethernet Interface Module User's Manual (Basic)
📖For QnA Ethernet Interface Module User's Manual
📖For A Ethernet Interface Module User's Manual

*4 Select one of the following for [Unit Type] in [Connected Ethernet Controller Setting] of GT Designer3.
• Ethernet module (MELSEC iQ-R Series): RJ71EN71
• Ethernet module (Q Series): QJ71E71
• Ethernet module (QnA Series): AJ71QE71
• Ethernet module (A Series): AJ71QE71
For [Connected Ethernet Controller Setting] of GT Designer3, refer to the following.
☞ Page 255 Connected Ethernet controller setting

*5 When using the peripheral I/F of Q170MCPU, Q17nDCPU-S1 or MR-MQ100, refer to the following.
☞ Page 239 Connection to PERIPHERAL I/F

*6 GT25-W and GT2505-V do not support option devices.

*7 The number of connectable controllers per GOT channel is indicated.

*8 The number of GOTs connectable to one Ethernet module is indicated.

*9 Up to 128 controllers in total can be set for the GOT channels No. 1 to No. 4.
16 or less is recommended.

When connecting to MELSEC iQ-F series

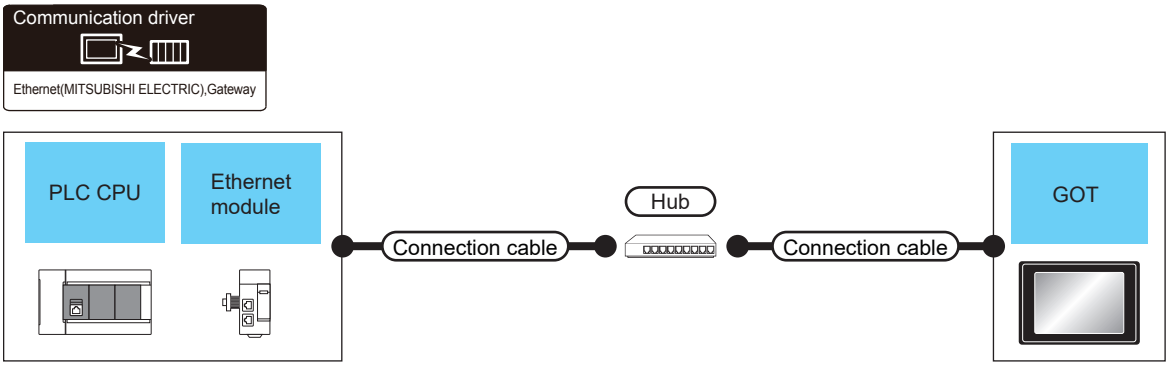

PLC			Connection cable*1	Maximum segment length*2	GOT		Max. pieces of equipment connected		
Model name	Ethernet module*3*4	Communication type	Cable model		Option device*5	Model	GOT*6*8	Unit*7	
								UDP	TCP
MELSEC iQ-F Series (FX5U, FX5UC, FX5UJ)	FX5-ENET FX5-ENET/IP	Ethernet	• 100BASE-TX Shielded twisted pair cable (STP) of category 5 or higher • 10BASE-T Shielded twisted pair cable (STP) of category 3 or higher	100m	- (Built into GOT)	GT27 GT25 GT23 GT21 GS25 GS21	63 (16 or less recommended)	32	32
					GT25-J71E71-100	GT27 GT25			

*1 Only available for MELSEC-Q (A mode), MELSEC-A (AnSCPU), and Motion CPU (A series) small type.
Connect the GOT to the Ethernet module, hub, or other system equipment according to the Ethernet network system used.
Use cables, connectors, and hubs that meet the IEEE802.3 10BASE-T/100BASE-TX standard.
When only one GOT is connected, the GOT can be directly connected to the controller without a hub.

*2 Length between a hub and a node
The maximum length depends on the Ethernet equipment used.
The following shows the number of the connectable nodes when a repeater hub is used.
• 10BASE-T: Up to 4 nodes for a cascade connection (500 m)
• 100BASE-TX: UP to 2 nodes for a cascade connection (205 m)
When switching hubs are used, the cascade connection between the switching hubs has no logical limit for the number of cascades.
For the limit, contact the switching hub manufacturer.

*3 For the system configuration of the Ethernet module, refer to the following manuals.
📖MELSEC iQ-F FX5-ENET User's Manual
📖MELSEC iQ-F FX5-ENET/IP User's Manual

*4 Select [FX5-ENET] for [Unit Type] in [Connected Ethernet Controller Setting] in GT Designer3.
For [Connected Ethernet Controller Setting] of GT Designer3, refer to the following.
☞ Page 255 Connected Ethernet controller setting

*5 GT25-W and GT2505-V do not support option devices.

*6 The number of connectable controllers per GOT channel is indicated.

*7 The number of GOTs connectable to one Ethernet module is indicated.

*8 Up to 128 controllers in total can be set for the GOT channels No. 1 to No. 4.
16 or less is recommended.

When connecting to MELSEC-FX

Communication driver

Ethernet(MITSUBISHI ELECTRIC),Gateway

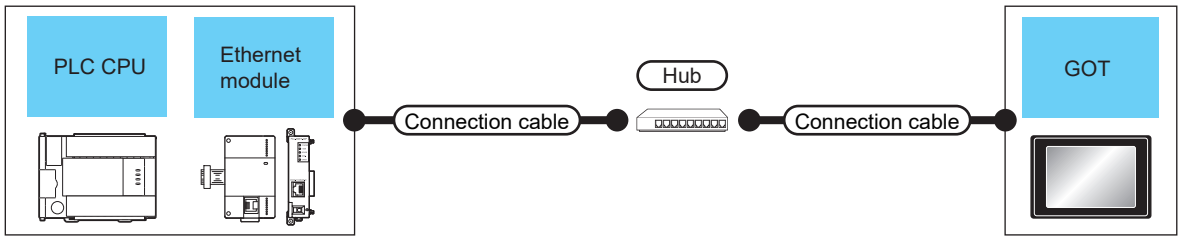

PLC			Connection cable*1	Maximum segment length*2	GOT		Max. pieces of equipment connected		
Model name	Ethernet module*3*4	Communication type	Cable model		Option device*8	Model	GOT*9*11 *12	Unit*10	
								UDP	TCP
MELSEC-FX (FX3U, FX3G)	FX3U-ENET-L	Ethernet	• 100BASE-TX Shielded twisted pair cable (STP) or unshielded twisted pair cable (UTP) of category 5 or higher • 10BASE-T Shielded twisted pair cable (STP) or unshielded twisted pair cable (UTP) of category 3 or higher	100m	- (Built into GOT)	GT27 GT25 GT23 GT21 07W GT21 04R GT21 03P 04P ET/R4 GS25 GS21	63 (16 or less recommended)	-	2
					GT25-J71E71-100	GT27 GT25			
MELSEC-FX (FX3U, FX3G)	FX3U-ENET	Ethernet		100m	- (Built into GOT)	GT27 GT25 GT23 GT21 07W GT21 04R GT21 03P 04P ET/R4 GS25 GS21	63 (16 or less recommended)	-	4
					GT25-J71E71-100	GT27 GT25			
MELSEC-FX (FX3UC, FX3GC)	FX3UC-1PS-5V, FX2NC-CNV-IF + FX3U-ENET-L*5	Ethernet	• 100BASE-TX Shielded twisted pair cable (STP) or unshielded twisted pair cable (UTP) of category 5 or higher • 10BASE-T Shielded twisted pair cable (STP) or unshielded twisted pair cable (UTP) of category 3 or higher	100m	- (Built into GOT)	GT27 GT25 GT23 GT21 07W GT21 04R GT21 03P 04P ET/R4 GS25 GS21	63 (16 or less recommended)	-	2
					GT25-J71E71-100	GT27 GT25			
MELSEC-FX (FX3UC, FX3GC)	FX3UC-1PS-5V, FX2NC-CNV-IF + FX3U-ENET*5	Ethernet		100m	- (Built into GOT)	GT27 GT25 GT23 GT21 07W GT21 04R GT21 03P 04P ET/R4 GS25 GS21	63 (16 or less recommended)	-	4
					GT25-J71E71-100	GT27 GT25			

PLC			Connection cable*1	Maximum segment length*2	GOT		Max. pieces of equipment connected		
Model name	Ethernet module*3*4	Communication type	Cable model		Option device*8	Model	GOT*9*11 *12	Unit*10	
								UDP	TCP
MELSEC-FX (FX3U, FX3UC-32MT-LT(-2))	FX3U-232-BD, FX3U-485-BD, FX3U-422-BD, FX3U-USB-BD, FX3U-8AV-BD, FX3U-CNV-BD + FX3U-ENET-ADP*6*7	Ethernet	• 100BASE-TX Shielded twisted pair cable (STP) or unshielded twisted pair cable (UTP) of category 5 or higher • 10BASE-T Shielded twisted pair cable (STP) or unshielded twisted pair cable (UTP) of category 3 or higher	100m	- (Built into GOT)	GT27 GT25 GT23 GT21 07W GT21 04R GT21 03P 04P ET/R4 GS25 GS21	63 (16 or less recommended)	-	4
					GT25-J71E71-100	GT27 GT25			
MELSEC-FX (FX3UC)	FX3U-ENET-ADP	Ethernet		100m	- (Built into GOT)	GT27 GT25 GT23 GT21 07W GT21 04R GT21 03P 04P ET/R4 GS25 GS21			
					GT25-J71E71-100	GT27 GT25			
MELSEC-FX (FX3G)	FX3G-CNV-ADP + FX3U-ENET-ADP*7	Ethernet	• 100BASE-TX Shielded twisted pair cable (STP) or unshielded twisted pair cable (UTP) of category 5 or higher • 10BASE-T Shielded twisted pair cable (STP) or unshielded twisted pair cable (UTP) of category 3 or higher	100m	- (Built into GOT)	GT27 GT25 GT23 GT21 07W GT21 04R GT21 03P 04P ET/R4 GS25 GS21	63 (16 or less recommended)	-	4
					GT25-J71E71-100	GT27 GT25			
MELSEC-FX (FX3GC)	FX3U-ENET-ADP*7	Ethernet		100m	- (Built into GOT)	GT27 GT25 GT23 GT21 07W GT21 04R GT21 03P 04P ET/R4 GS25 GS21			
					GT25-J71E71-100	GT27 GT25			
MELSEC-FX (FX3S)	FX3S-CNV-ADP + FX3U-ENET-ADP*7	Ethernet		100m	- (Built into GOT)	GT27 GT25 GT23 GT21 07W GT21 04R GT21 03P 04P ET/R4 GS25 GS21			
					GT25-J71E71-100	GT27 GT25			

*1 Only available for MELSEC-Q (A mode), MELSEC-A (AnSCPU), and Motion CPU (A series) small type.
Connect the GOT to the Ethernet module, hub, or other system equipment according to the Ethernet network system used.
Use cables, connectors, and hubs that meet the IEEE802.3 10BASE-T/100BASE-TX standard.
When only one GOT is connected, the GOT can be directly connected to the controller without a hub.

*2 Length between a hub and a node
The maximum length depends on the Ethernet equipment used.
The following shows the number of the connectable nodes when a repeater hub is used.
• 10BASE-T: Up to 4 nodes for a cascade connection (500 m)
• 100BASE-TX: UP to 2 nodes for a cascade connection (205 m)
When switching hubs are used, the cascade connection between the switching hubs has no logical limit for the number of cascades.
For the limit, contact the switching hub manufacturer.

*3 For the system configuration of the Ethernet module, refer to the following manuals.
📖For FX Ethernet Interface Module User's Manual

*4 Select [FX] for [Unit Type] in [Connected Ethernet Controller Setting] in GT Designer3.
For [Connected Ethernet Controller Setting] of GT Designer3, refer to the following.
☞ Page 255 Connected Ethernet controller setting

*5 When using an Ethernet module with the FX3UC series, FX2NC-CNV-IF or FX3UC-1PS-5V is required.

*6 When using an Ethernet module with the FX3U series, FX3U-232-BD, FX3U-485-BD, FX3U-422-BD, FX3U-USB-BD, FX3U-8AV-BD, or FX3U-CNV-BD is required.

*7 FX3U-ENET-ADP occupies one extension communication adapter CH (Max. 2 CHs) of the FX3U(C) or FX3G(C) and one extension communication adapter CH (Max. 1 CH) of the FX3S.
One CPU allows the connection of only one FX3U-ENET-ADP.

*8 GT25-W and GT2505-V do not support option devices.

*9 The number of connectable controllers per GOT channel is indicated.

*10 The number of GOTs connectable to one Ethernet module is indicated.

*11 Up to 128 controllers in total can be set for the GOT channels No. 1 to No. 4.
16 or less is recommended.

*12 For GT21 and GS21, up to four controllers can be connected per channel.

Connection to Built-in Ethernet port CPU or C Controller module

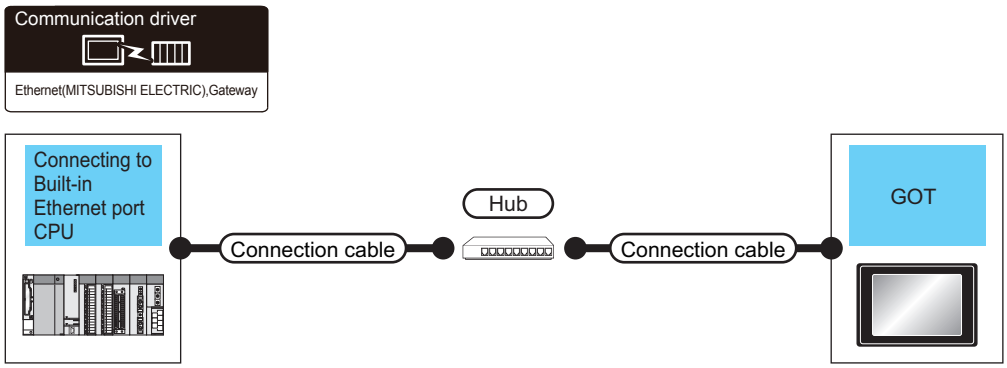

PLC		Connection cable*1*2	Maximum segment length *3	GOT		Max. pieces of equipment connected		
Model name	Communication type			Option device*7	Model	GOT*8*10	PLC*9	
							UDP	TCP
MELSEC iQ-R Series *4*5*11 Robot controller CR800-R(R16RTCPU)	Ethernet	• 100BASE-TX Shielded twisted pair cable (STP) or unshielded twisted pair cable (UTP) of category 5 or higher • 10BASE-T Shielded twisted pair cable (STP) or unshielded twisted pair cable (UTP) of category 3 or higher	100m	- (Built into GOT)	GT27 GT25 GT23 GT21(07W) GT21(04R) GT21(03P 04P ET/R4) GS25 GS21	119 (16 or less recommended)	119	17
				GT25-J71E71-100	GT27 GT25			
Motion CPU (MELSEC iQ-R Series) *4*5*11	Ethernet	• 100BASE-TX Shielded twisted pair cable (STP) or unshielded twisted pair cable (UTP) of category 5 or higher • 10BASE-T Shielded twisted pair cable (STP) or unshielded twisted pair cable (UTP) of category 3 or higher	100m	- (Built into GOT)	GT27 GT25 GT23 GT21(07W) GT21(04R) GT21(03P 04P ET/R4) GS25 GS21	119 (16 or less recommended)	119	17
				GT25-J71E71-100	GT27 GT25			
C Controller module (MELSEC iQ-R Series)*11	Ethernet	• 100BASE-TX Shielded twisted pair cable (STP) or unshielded twisted pair cable (UTP) of category 5 or higher • 10BASE-T Shielded twisted pair cable (STP) or unshielded twisted pair cable (UTP) of category 3 or higher	100m	- (Built into GOT)	GT27 GT25 GT23 GT21(07W) GT21(04R) GT21(03P 04P ET/R4) GS25 GS21	119 (16 or less recommended)	119	17
				GT25-J71E71-100	GT27 GT25			
MELSECWinCPU (MELSEC iQ-R Series)*11	Ethernet	• 100BASE-TX Shielded twisted pair cable (STP) or unshielded twisted pair cable (UTP) of category 5 or higher • 10BASE-T Shielded twisted pair cable (STP) or unshielded twisted pair cable (UTP) of category 3 or higher	100m	- (Built into GOT)	GT27 GT25 GT23 GT21(07W) GT21(04R) GT21(03P 04P ET/R4) GS25 GS21	119 (16 or less recommended)	119	17
				GT25-J71E71-100	GT27 GT25			

PLC		Connection cable*1*2	Maximum segment length *3	GOT		Max. pieces of equipment connected		
Model name	Communication type			Option device*7	Model	GOT*8*10	PLC*9	
							UDP	TCP
MELSEC-QnUDE(H)*4*5 MELSEC-QnUDV*4*5 CR800-Q (Q172DSRCPU)	Ethernet	• 100BASE-TX Shielded twisted pair cable (STP) or unshielded twisted pair cable (UTP) of category 5 or higher • 10BASE-T Shielded twisted pair cable (STP) or unshielded twisted pair cable (UTP) of category 3 or higher	100m	- (Built into GOT)	GT27 GT25 GT23 GT21 07W GT21 04R GT21 03P 04P ET/R4 GS25 GS21	63 (16 or less recommended)	16 (For UDP and TCP in total)	
				GT25-J71E71-100	GT27 GT25			
MELSEC-L *4*5	Ethernet	• 100BASE-TX Shielded twisted pair cable (STP) or unshielded twisted pair cable (UTP) of category 5 or higher • 10BASE-T Shielded twisted pair cable (STP) or unshielded twisted pair cable (UTP) of category 3 or higher	100m	- (Built into GOT)	GT27 GT25 GT23 GT21 07W GT21 04R GT21 03P 04P ET/R4 GS25 GS21	63 (16 or less recommended)	16 (For UDP and TCP in total)	
				GT25-J71E71-100	GT27 GT25			
C Controller module (Q Series)	Ethernet	• 100BASE-TX Shielded twisted pair cable (STP) or unshielded twisted pair cable (UTP) of category 5 or higher • 10BASE-T Shielded twisted pair cable (STP) or unshielded twisted pair cable (UTP) of category 3 or higher	100m	- (Built into GOT)	GT27 GT25 GT23 GT21 07W GT21 04R GT21 03P 04P ET/R4 GS25 GS21	63 (16 or less recommended)	*6	
				GT25-J71E71-100	GT27 GT25			
MELSEC-FX (FX3GE)	Ethernet	• 100BASE-TX Shielded twisted pair cable (STP) or unshielded twisted pair cable (UTP) of category 5 or higher • 10BASE-T Shielded twisted pair cable (STP) or unshielded twisted pair cable (UTP) of category 3 or higher	100m	- (Built into GOT)	GT27 GT25 GT23 GT21 07W GT21 04R GT21 03P 04P ET/R4 GS25 GS21	63 (16 or less recommended)	-	4
				GT25-J71E71-100	GT27 GT25			
MELSEC iQ-F Series *4*5	Ethernet	• 100BASE-TX Shielded twisted pair cable (STP) of category 5 or higher • 10BASE-T Shielded twisted pair cable (STP) of category 3 or higher	100m	- (Built into GOT)	GT27 GT25 GT23 GT21 07W GT21 04R GT21 03P 04P ET/R4 GS25 GS21	63 (16 or less recommended)	-	8
				GT25-J71E71-100	GT27 GT25			

*1 Only available for MELSEC-Q (A mode), MELSEC-A (AnSCPU), and Motion CPU (A series) small type.
Connect the GOT to the Ethernet module, hub, wireless LAN adapter (NZ2WL-JPA, NZ2WL-JPS), or other system equipment according to the Ethernet network system used.
Use cables, connectors, and hubs that meet the IEEE802.3 10BASE-T/100BASE-TX standard.

*2 When only one GOT is connected, the GOT can be directly connected to the controller without a hub.

*3 Length between a hub and a node
The maximum length depends on the Ethernet equipment used.
The following shows the number of the connectable nodes when a repeater hub is used.
• 10BASE-T: Up to 4 nodes for a cascade connection (500 m)
• 100BASE-TX: UP to 2 nodes for a cascade connection (205 m)
When switching hubs are used, the cascade connection between the switching hubs has no logical limit for the number of cascades.
For the limit, contact the switching hub manufacturer.

*4 For the system configuration of the Built-in Ethernet port CPU, refer to the manual of the PLC.

*5 For [Unit Type] to be selected in [Connected Ethernet Controller Setting] in GT Designer3, refer to the following.
☞ Page 255 Connected Ethernet controller setting

*6 By the controller type of the C Controller module (Q Series) and an operation mode, It's different in number of connectable GOTs.

Controller Type	Operation mode	Number of connectable GOTs
Q12DCCPU-V	standard monitor mode	1
	Expansion mode	16
Q24DHCCPU-V/VG/LS	-	16

*7 GT25-W and GT2505-V do not support option devices.

*8 The number of connectable controllers per GOT channel is indicated.

*9 The number of GOTs connectable to one PLC is indicated.

*10 Up to 128 controllers in total can be set for the GOT channels No. 1 to No. 4.
16 or less is recommended.

*11 For connection to RnENCPU in the multiple CPU system, the firmware version of the RnENCPU must be 14 or later.

Connection to Display I/F

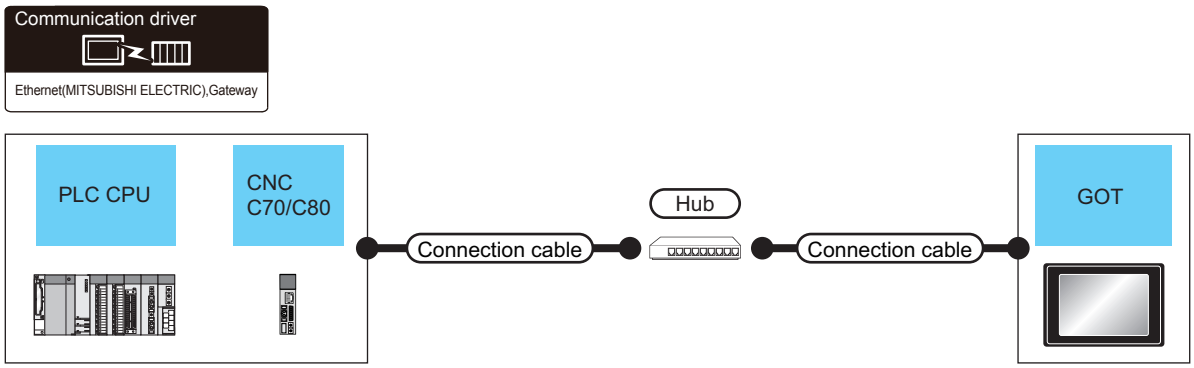

PLC		Connection cable*1	Maximum segment length*3	GOT		Number of connectable equipment
Model name	Communication type			Option device*6	Model	
CNC C70 (Q173NCCPU)*3*4	Ethernet	• 100BASE-TX Shielded twisted pair cable (STP) or unshielded twisted pair cable (UTP) of category 5 or higher • 10BASE-T Shielded twisted pair cable (STP) or unshielded twisted pair cable (UTP) of category 3 or higher	100m	- (Built into GOT)	GT27 GT25 GT23 GS25	16 GOTs for 1 network
				GT25-J71E71-100	GT27 GT25	
CNC C80 (R16NCCPU-S1)*5	Ethernet		100m	- (Built into GOT)	GT27 GT25 GT21 GS25 GS21	8 GOTs for 1 network
				GT25-J71E71-100	GT27 GT25	

*1 Only available for MELSEC-Q (A mode), MELSEC-A (AnSCPU), and Motion CPU (A series) small type.
Connect the GOT to the Ethernet module, hub, or other system equipment according to the Ethernet network system used.
Use cables, connectors, and hubs that meet the IEEE802.3 10BASE-T/100BASE-TX standard.
When only one GOT is connected, the GOT can be directly connected to the controller without a hub.

*2 Length between a hub and a node
The maximum length depends on the Ethernet equipment used.
The following shows the number of the connectable nodes when a repeater hub is used.
• 10BASE-T: Up to 4 nodes for a cascade connection (500 m)
• 100BASE-TX: UP to 2 nodes for a cascade connection (205 m)
When switching hubs are used, the cascade connection between the switching hubs has no logical limit for the number of cascades.
For the limit, contact the switching hub manufacturer.

*3 For the system configuration of the CNC C70, refer to the following manual.
📖C70 Series SET UP MANUAL

*4 Select [Q17nNC] for [Unit Type] in [Connected Ethernet Controller Setting] of GT Designer3.
For [Connected Ethernet Controller Setting] of GT Designer3, refer to the following.
☞ Page 255 Connected Ethernet controller setting

*5 Select [RnNCCPU] for [Unit Type] in [Connected Ethernet Controller Setting] of GT Designer3.
For [Connected Ethernet Controller Setting] of GT Designer3, refer to the following.
☞ Page 255 Connected Ethernet controller setting

*6 GT25-W and GT2505-V do not support option devices.

Connection to NZ2GF-ETB

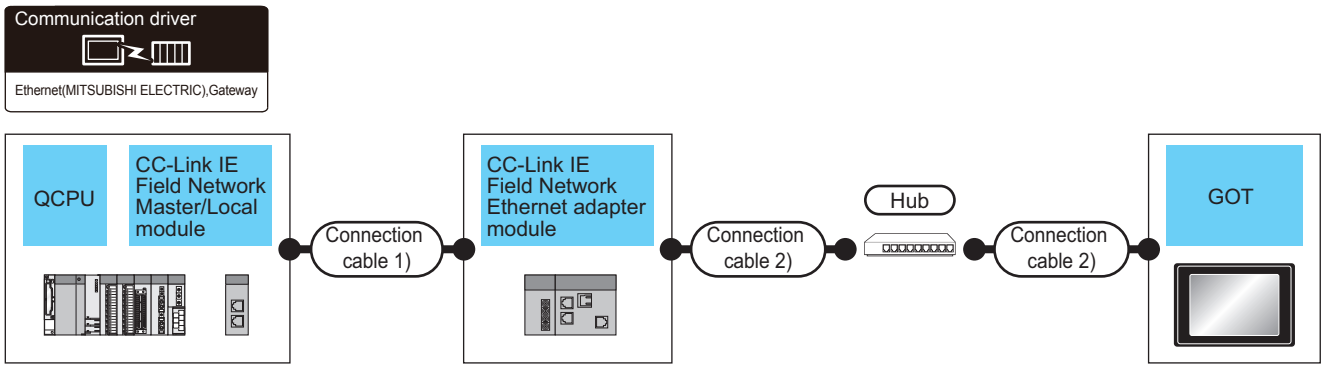

PLC		Connection cable 1)*4		CC-Link IE Field Network Ethernet adapter module			Connection cable 2)*1		GOT		Number of connectable equipment
Model name	CC-Link IE Field Network Master/ Local module	Cable model	Max. distance	Communication type	Model name	Communication type	Cable model Connection diagram number	Maximum segment length*3	Option device *6	Model	
MELSEC-Q (Q mode) Motion CPU (Q Series)	QJ71GF11-T2*4	Double-shielded twisted pair cable*3	100m	CC-Link IE	NZ2GF-ETB	Ethernet	• 100BASE-TX Shielded twisted pair cable (STP) or unshielded twisted pair cable (UTP) of category 5 or higher • 10BASE-T Shielded twisted pair cable (STP) or unshielded twisted pair cable (UTP) of category 3 or higher	100m	- (Built into GOT)	GT27 GT25 GT23 GT21 GT21 GT21 GS25 GS21	128 GOTs*5 (recommended to 16 units or less)
									GT25-J71E71-100	GT27 GT25	

*1 Only available for MELSEC-Q (A mode), MELSEC-A (AnSCPU), and Motion CPU (A series) small type.
Connect the GOT to the Ethernet module, hub, wireless LAN adapter (NZ2WL-JPA, NZ2WL-JPS), or other system equipment according to the Ethernet network system used.
Use cables, connectors, and hubs that meet the IEEE802.3 10BASE-T/100BASE-TX standard.

*2 Length between a hub and a node
The maximum length depends on the Ethernet equipment used.
The following shows the number of the connectable nodes when a repeater hub is used.
• 10BASE-T: Up to 4 nodes for a cascade connection (500 m)
• 100BASE-TX: UP to 2 nodes for a cascade connection (205 m)
When switching hubs are used, the cascade connection between the switching hubs has no logical limit for the number of cascades.
For the limit, contact the switching hub manufacturer.

*3 Use cables with the following specifications.

Connector	Range
Category 5e or higher Shielded RJ-45	Cable that satisfies the following specifications: IEEE802.3 1000BASE-T ANSI/TIA/EIA-568-B(Category 5e)

*4 For the system configuration on the CC-Link IE Field Network module side, refer to the following manual.
CC-Link IE Field Network Ethernet Adapter Module User's Manual

*5 The number of connectable GOTs for one network is 63 units (at most).

*6 GT25-W and GT2505-V do not support option devices.

Connection to PERIPHERAL I/F

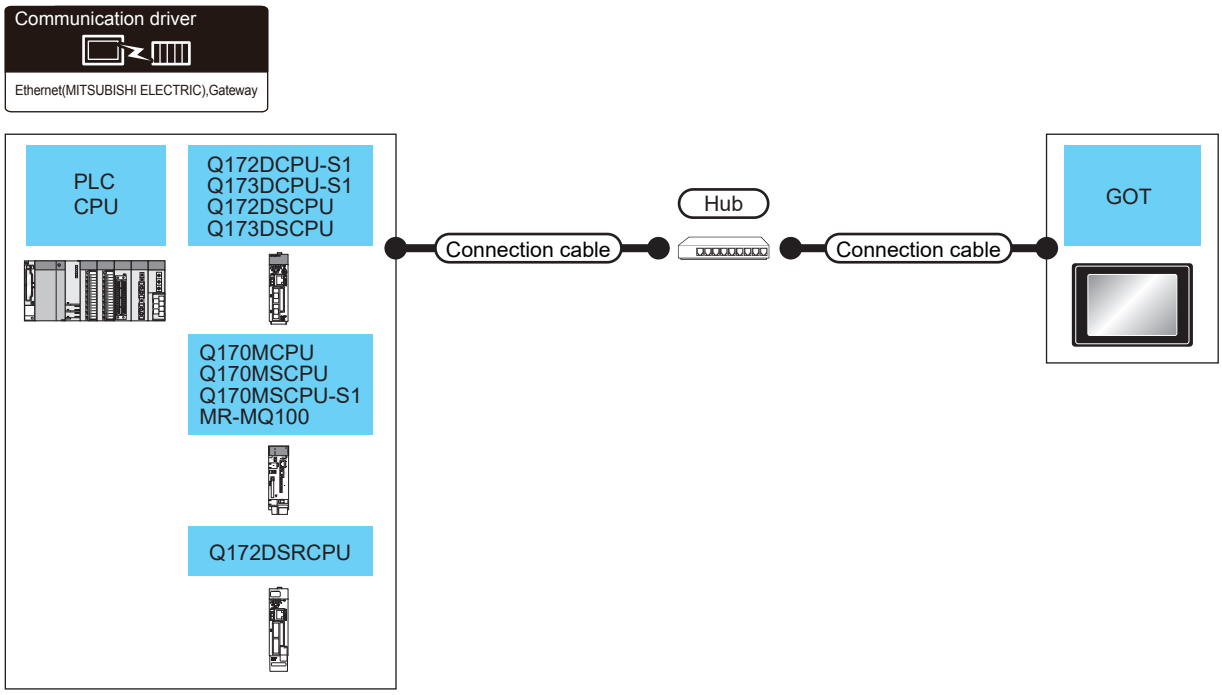

PLC		Connection cable*1	Maximum segment length*3	GOT		Number of connectable equipment
Model name*2	Communication type			Option device*4	Model	
Motion CPU (Q Series) Q172DCPU-S1 Q173DCPU-S1 Q172DSCPU Q173DSCPU Q170MCPU Q170MSCPU Q170MSCPU-S1 MR-MQ100 CR800-Q (Q172DSRCPU)	Ethernet	• 100BASE-TX Shielded twisted pair cable (STP) or unshielded twisted pair cable (UTP) of category 5 or higher • 10BASE-T Shielded twisted pair cable (STP) or unshielded twisted pair cable (UTP) of category 3 or higher	30m	- (Built into GOT)	GT27 GT25 GT23 GT21 GS25 GS21	16 GOTs for 1 network
				GT25-J71E71-100	GT27 GT25	

*1 Only available for MELSEC-Q (A mode), MELSEC-A (AnSCPU), and Motion CPU (A series) small type.
Connect the GOT to the Ethernet module, hub, or other system equipment according to the Ethernet network system used.
Use cables, connectors, and hubs that meet the IEEE802.3 10BASE-T/100BASE-TX standard.
When only one GOT is connected, the GOT can be directly connected to the controller without a hub.

*2 When using the PERIPHERAL I/F, set as shown below.
• Use the GT Designer3 Version1.12N or later.
• Select [QnUDE(H)] for [Unit Type] in [Connected Ethernet Controller Setting] of GT Designer3.
For [Connected Ethernet Controller Setting] of GT Designer3, refer to the following.
☞ Page 255 Connected Ethernet controller setting

*3 Length between a hub and a node
The maximum length depends on the Ethernet equipment used.
The following shows the number of the connectable nodes when a repeater hub is used.
• 10BASE-T: Up to 4 nodes for a cascade connection (500 m)
• 100BASE-TX: UP to 2 nodes for a cascade connection (205 m)
When switching hubs are used, the cascade connection between the switching hubs has no logical limit for the number of cascades.
For the limit, contact the switching hub manufacturer.

*4 GT25-W and GT2505-V do not support option devices.

Point

• Access to other networks
Other networks cannot be accessed through the PERIPHERAL I/F.

Connection to CC-Link IE TSN-equipped module

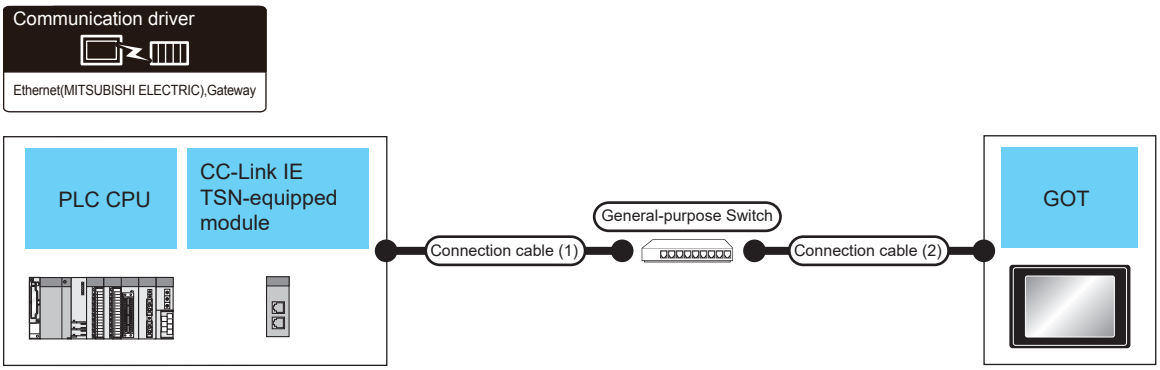

PLC			Connection cable (1) *1		External device	Connection cable (2) *1		GOT		Max. pieces of equipment connected		
Model name	CC-Link IE TSN-equipped module*3 *4	Communication type	Cable model	Maximum segment length *5		Cable model	Maximum segment length *5	Option device *10	Model	GOT *6*8	Unit*7 UDP	Unit*7 TCP
MELSEC iQ-R series (RnCPU, RnENCPU, RnSFCPU) C Controller module (MELSEC iQ-R series) MELSECWinCPU (MELSEC iQ-R series)	RJ71GN11-T2	Ethernet	• 1000BASE-T Double-shielded twisted pair cable (STP) or twisted pair cable of category 5e or higher • 100BASE-TX Double-shielded twisted pair cable (STP) or twisted pair cable of category 5 or higher	100m	General-purpose Switch*2	• 100BASE-TX Shielded twisted pair cable (STP) or unshielded twisted pair cable (UTP) of category 5 or higher	100m	- (Built into GOT)	GT27 GT25 GT23 GT21 07W GT21 04R GT21 03P 04P ET/R4 GS25 GS21	119 (8 or less recommended)	8	8
								GT25-J71E71-100	GT27 GT25			
MELSEC iQ-R series (RnCPU, RnENCPU)	RJ71GN11-EIP*9	Ethernet	• 1000BASE-T Double-shielded twisted pair cable (STP) or twisted pair cable of category 5e or higher • 100BASE-TX Double-shielded twisted pair cable (STP) or twisted pair cable of category 5 or higher	100m	General-purpose Switch*2	• 100BASE-TX Shielded twisted pair cable (STP) or unshielded twisted pair cable (UTP) of category 5 or higher	100m	- (Built into GOT)	GT27 GT25 GT23 GT21 07W GT21 04R GT21 03P 04P ET/R4 GS25 GS21	119 (8 or less recommended)	8	8
								GT25-J71E71-100	GT27 GT25			

PLC			Connection cable (1) *1		External device	Connection cable (2) *1		GOT		Max. pieces of equipment connected		
Model name	CC-Link IE TSN-equipped module*3 *4	Communication type	Cable model	Maximum segment length *5		Cable model	Maximum segment length *5	Option device *10	Model	GOT *6*8	Unit*7	
											UDP	TCP
MELSEC iQ-F series (FX5U, FX5UC, FX5UJ)	FX5-CCLGN-MS	Ethernet	• 1000BASE-T Double-shielded twisted pair cable (STP) or twisted pair cable of category 5e or higher • 100BASE-TX Double-shielded twisted pair cable (STP) or twisted pair cable of category 5 or higher	100m	General-purpose Switch*2	• 100BASE-TX Shielded twisted pair cable (STP) or unshielded twisted pair cable (UTP) of category 5 or higher	100m	- (Built into GOT)	GT27 GT25 GT23 GT21 07W GT21 04R GT21 03P 04P ET/R4 GS25 GS21	63 (8 or less recommended)	8	8
								GT25-J71E71-100	GT27 GT25			

*1 Use the straight cable.
*2 For usable General-purpose Switches, refer to the following.
MELSEC iQ-R CC-Link IE TSN User's Manual (Startup)
MELSEC iQ-R CC-Link IE TSN Plus Master/Local Module User's Manual
MELSEC iQ-F FX5 User's Manual (CC-Link IE TSN)
*3 For the system configuration of the CC-Link IE TSN-equipped module side, refer to the following.
MELSEC iQ-R CC-Link IE TSN User's Manual (Startup)
MELSEC iQ-R CC-Link IE TSN Plus Master/Local Module User's Manual
MELSEC iQ-F FX5 User's Manual (CC-Link IE TSN)
*4 Select the following for [Unit Type] in [Connected Ethernet Controller Setting] in GT Designer3.
MELSEC iQ-R Series: [RJ71GN11-T2/RD78G(H)]
MELSEC iQ-F Series: [FX5-CCLGN-MS/FX5-nSSC-G]
For [Connected Ethernet Controller Setting] in GT Designer3, refer to the following.
☞ Page 255 Connected Ethernet controller setting
*5 Length between the General-purpose Switch and node
*6 The number of connectable controllers per GOT channel is indicated.
*7 Number of GOTs connectable to one CC-Link IE TSN-equipped module
*8 Up to 128 controllers in total can be set for the GOT channels No. 1 to No. 4.
*9 Connect the cable to the P1 port of the RJ71GN11-EIP.
*10 GT25-W and GT2505-V do not support option devices.

Connection to Motion module

The following methods are available to connect the GOT to a Motion module.

☞ Page 244 Connecting the GOT to the built-in Ethernet port of the Motion module
☞ Page 242 Connecting the GOT and Motion module through the built-in Ethernet port of the PLC

Point

To monitor the global labels of the Motion module with the GOT, connect the GOT and Motion module through the built-in Ethernet port of the PLC.
If the GOT is connected to the built-in port of the Motion module, the global labels of the Motion module cannot be monitored.

Connecting the GOT and Motion module through the built-in Ethernet port of the PLC

The following shows the system configuration for monitoring the global labels of the Motion module with the GOT.

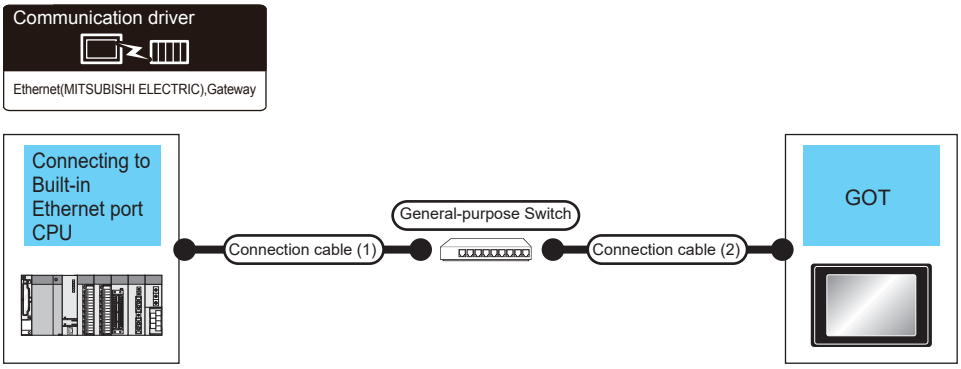

PLC			Connection cable (1) *1		External device	Connection cable (2) *1		GOT		Number of connectable equipment
Model name	Motion module *3	Communication type	Cable model	Maximum segment length *6		Cable model	Maximum segment length *6	Option device *9	Model	
MELSEC iQ-R series (RnCPU, RnENCPU, RnSFCPU) *4*8 C Controller module (MELSEC iQ-R Series) *5	RD78G4 RD78G8 RD78G16 RD78G32 RD78G64 RD78GHV RD78GHW	Ethernet	• 100BASE-TX Shielded twisted pair cable (STP) or unshielded twisted pair cable (UTP) of category 5 or higher • 10BASE-T Shielded twisted pair cable(STP) or unshielded twisted pair cable (UTP) of category 3 or higher	100m	General-purpose Switch*2	• 100BASE-TX Shielded twisted pair cable (STP) or unshielded twisted pair cable (UTP) of category 5 or higher • 10BASE-T Shielded twisted pair cable(STP) or unshielded twisted pair cable (UTP) of category 3 or higher	100m	- (Built into GOT)	GT27 GT25 GT23 GS25	1 GOT for 1 motion module *7
								GT25-J71E71-100	GT27 GT25	

*1 Use the straight cable.
*2 For usable General-purpose Switches, refer to the following.
For usable general-purpose hubs, refer to the following.
📖MELSEC iQ-R Motion Module User's Manual (Startup)
*3 For the system configuration for the motion module side, refer to the following manual.
📖MELSEC iQ-R Motion Module User's Manual (Startup)
*4 Select [RCPU] for [Unit Type] in [Connected Ethernet Controller Setting] in GT Designer3.
Set either of the following values for [Port No.] according to the communication method.
• UDP: [5006]
• TCP: [5007]
For [Connected Ethernet Controller Setting] in GT Designer3, refer to the following.
☞ Page 255 Connected Ethernet controller setting

*5 Select [RnCCPU/RnWCPU] for [Unit Type] in [Connected Ethernet Controller Setting] in GT Designer3.
Set either of the following values for [Port No.] according to the communication method.
• UDP: [5006]
• TCP: [5007]
For [Connected Ethernet Controller Setting] in GT Designer3, refer to the following.
☞ Page 255 Connected Ethernet controller setting
*6 Length between the General-purpose Switch and node
*7 Multiple devices cannot access the motion module simultaneously.
Before accessing the motion module being monitored by the GOT, end the monitoring by the GOT.
*8 To use the multiple CPU system when the GOT is connected to RnENCPU, the firmware version of the RnENCPU must be 10 or later.
*9 GT25-W and GT2505-V do not support option devices.

Connecting the GOT to the built-in Ethernet port of the Motion module

The following shows the system configuration for monitoring the devices of the PLC CPU with the GOT.

■When connecting to MELSEC iQ-R series

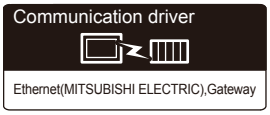

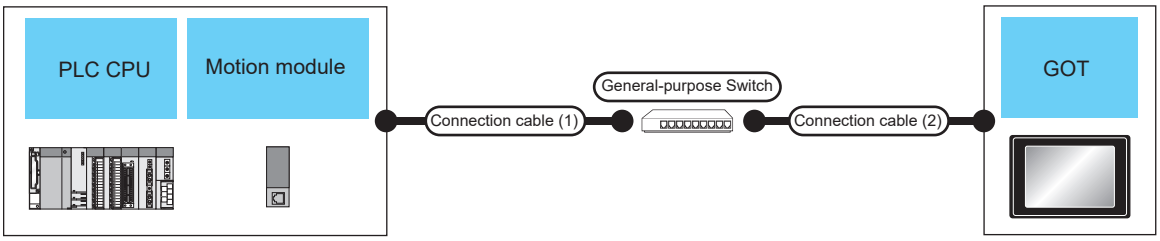

PLC			Connection cable (1) *1		External device	Connection cable (2) *1		GOT		Max. pieces of equipment connected		
Model name	Motion module *3*4	Communication type	Cable model	Maximum segment length *5		Cable model	Maximum segment length *5	Option device *9	Model	GOT *6*8	Unit*7	
											UDP	TCP
MELSEC iQ-R series (RnCPU, RnENCPU, RnSFCPU) C Controller module (MELSEC iQ-R Series)	RD78G4 RD78G8 RD78G16 RD78G32 RD78G64 RD78GHV RD78GHW	Ethernet	• 1000BASE-T Double-shielded twisted pair cable (STP) or twisted pair cable of category 5e or higher • 100BASE-TX Double-shielded twisted pair cable (STP) or twisted pair cable of category 5 or higher	100m	General-purpose Switch*2	• 100BASE-TX Shielded twisted pair cable (STP) or unshielded twisted pair cable (UTP) of category 5 or higher	100m	- (Built into GOT)	GT27 GT25 GT23 GT21 07W GT21 04R GT21 03P 04P ET/R4 GS25 GS21	119 (8 or less recommended)	8	8
								GT25-J71E71-100	GT27 GT25			

*1 Use the straight cable.
*2 For usable General-purpose Switches, refer to the following.
📖MELSEC iQ-R Motion Module User's Manual (Startup)
*3 For the system configuration on the Motion module side, refer to the following.
📖MELSEC iQ-R Motion Module User's Manual (Startup)
*4 Select [RJ71GN11-T2/RD78G(H)] for [Unit Type] in [Connected Ethernet Controller Setting] in GT Designer3.
For [Connected Ethernet Controller Setting] in GT Designer3, refer to the following.
☞ Page 255 Connected Ethernet controller setting
*5 Length between the General-purpose Switch and node
*6 The number of connectable controllers per GOT channel is indicated.
*7 Number of GOTs connectable to one Motion module
*8 Up to 128 controllers in total can be set for the GOT channels No. 1 to No. 4.
*9 GT25-W and GT2505-V do not support option devices.

■When connecting to MELSEC iQ-F series

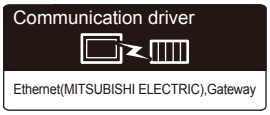

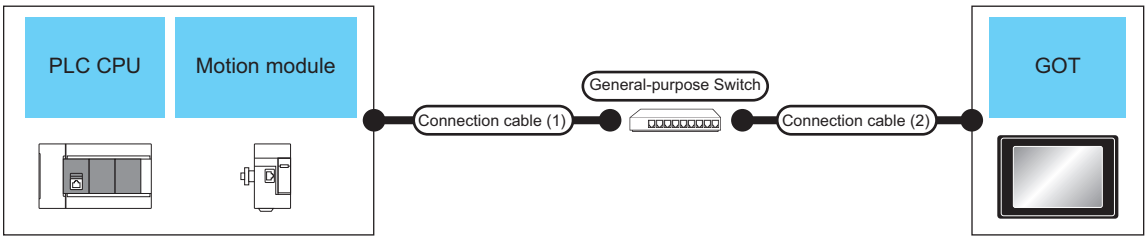

PLC			Connection cable (1) *1		External device	Connection cable (2) *1		GOT		Max. pieces of equipment connected		
Model name	Motion module *3*4	Communication type	Cable model	Maximum segment length *5		Cable model	Maximum segment length *5	Option device *9	Model	GOT *6*8	Unit*7	
											UDP	TCP
MELSEC iQ-F series (FX5U, FX5UC)	FX5-40SSC-G FX5-80SSC-G	Ethernet	• 1000BASE-T Double-shielded twisted pair cable (STP) or twisted pair cable of category 5e or higher • 100BASE-TX Double-shielded twisted pair cable (STP) or twisted pair cable of category 5 or higher	100m	General-purpose Switch*2	• 100BASE-TX Shielded twisted pair cable (STP) or unshielded twisted pair cable (UTP) of category 5 or higher	100m	- (Built into GOT)	GT27 GT25 GT23 GT21 GT21 GT21 GS25 GS21	63 (8 or less recommended)	8	8
								GT25-J71E71-100	GT27 GT25			

*1 Use the straight cable.
*2 For usable General-purpose Switches, refer to the following.
📖MELSEC iQ-F FX5 Motion Module/Simple Motion Module User's Manual (Startup)
*3 For the system configuration on the Motion module side, refer to the following.
📖MELSEC iQ-F FX5 Motion Module/Simple Motion Module User's Manual (Startup)
*4 Select [FX5-CCLGN-MS/FX5-nSSC-G] for [Unit Type] in [Connected Ethernet Controller Setting] in GT Designer3.
For [Connected Ethernet Controller Setting] in GT Designer3, refer to the following.
☞ Page 255 Connected Ethernet controller setting
*5 Length between the General-purpose Switch and node
*6 The number of connectable controllers per GOT channel is indicated.
*7 Number of GOTs connectable to one Motion module
*8 Up to 128 controllers in total can be set for the GOT channels No. 1 to No. 4.
*9 GT25-W and GT2505-V do not support option devices.

Connection through a servo amplifier

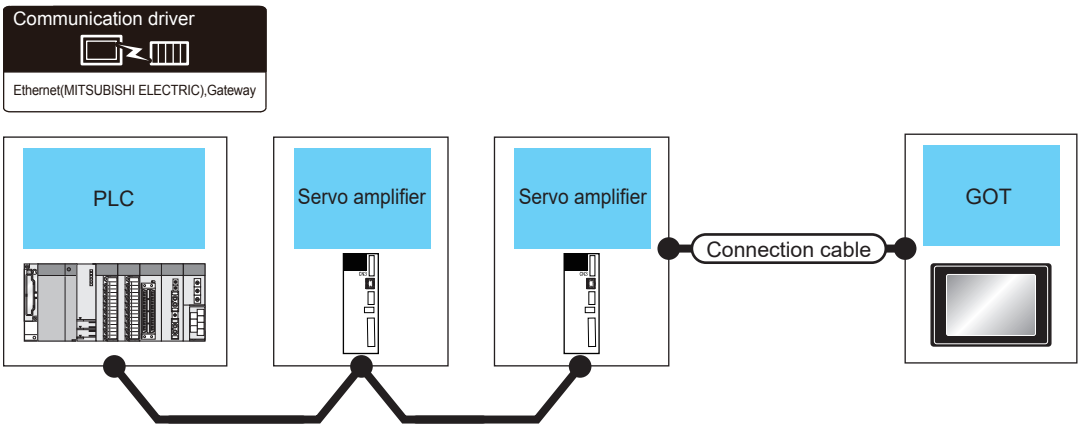

PLC*1		Servo amplifier		Connection cable	Maximum segment length*2	GOT*3		Number of connectable equipment
Model name	Communication type	Model name	Communication type			Option device*4	Model	
MELSEC iQ-R series*5 C Controller module (MELSEC iQ-R series) MELSEC iQ-F series*5 MELSEC-Q (Q mode)*6 MELSEC-L*6	CC-Link IE Field Network Basic	MR-J5-□G MR-J5-□G-RJ MR-J5D1-□G4 MR-JET-G	Ethernet	• 100BASE-TX Shielded twisted pair cable (STP) or unshielded twisted pair cable (UTP) of category 5 or higher	100m	- (Built into GOT)	GT27 GT25 GT23 GT21 07W GT21 04R GT21 03P 04P ETR4 GS25 GS21	1 GOT for 1 servo amplifier
						GT25-J71E71-100	GT27 GT25	

*1 For the system configuration of the PLC, refer to the following.
Manual of the PLC

*2 The length between the hub and node.
The maximum length depends on the Ethernet module used.
The following shows the number of the connectable pieces of equipment when a repeater hub is used.
• 100BASE-TX: Up to 2 pieces using cascade connection (205 m)
For the cascade connection between the switching hubs, there is no theoretical limit to the number of cascades.
For whether there is a limit, contact the switching hub manufacturer.

*3 For the settings in GOT, refer to the following.
☞ Page 248 GOT Side Settings

*4 GT25-W and GT2505-V do not support option devices.

*5 Use a PLC whose firmware version is as shown below.

Series	Model name	Applicable firmware version
MELSEC iQ-R series	R00CPU R01CPU R02CPU	From the first version
	R04CPU R08CPU R16CPU R32CPU R120CPU	25 or later
	R04ENCPU R08ENCPU R16ENCPU R32ENCPU R120ENCPU	
MELSEC iQ-F series	FX5U FX5UC FX5UJ FX5S	1.040 or later

*6 Use a PLC with a serial number starting with a 5-digit number as shown below.

Series	Model name	Applicable version
MELSEC-Q (Q mode)	Q03UDVCPU Q04UDVCPU Q06UDVCPU Q13UDVCPU Q26UDVCPU	PLCs having a serial number starting with 18112 or later
MELSEC-L	L02CPU L06CPU L26CPU L26CPU-BT L02CPU-P L06CPU-P L26CPU-P L26CPU-PBT	PLCs having a serial number starting with 18112 or later

4.3 GOT Side Settings

Setting communication interface (Controller Setting)

Set the channel of the connected equipment.

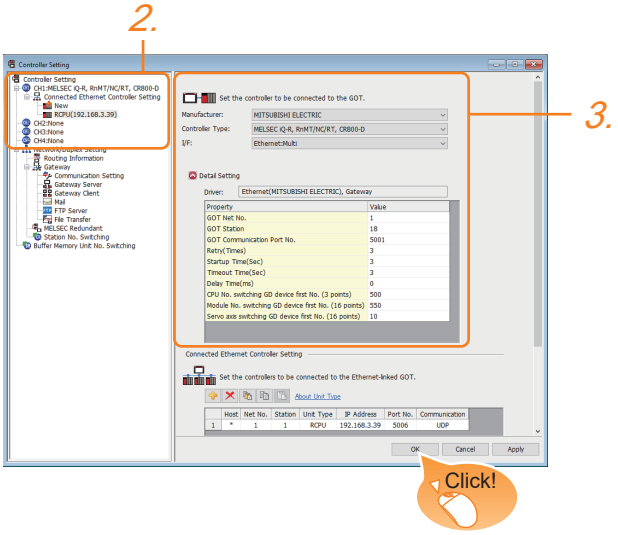

1. Select [Common] → [Controller Setting] from the menu.

2. In the [Controller Setting] window, select the channel No. to be used from the list menu.

3. Set the following items.

- [Manufacturer]: [MITSUBISHI ELECTRIC]
- [Controller Type]: Configure the setting according to the controller to be connected.
- [I/F]: [Ethernet:Multi]

When using the Ethernet communication unit (GT25-J71E71-100), also select [Ethernet:Multi].

- [Detail Setting]: Configure the settings according to the usage environment.

☞ Page 249 Communication detail settings

4. When you have completed the settings, click the [OK] button.

Point

The settings of connecting equipment can be confirmed in [I/F Communication Setting].
For details, refer to the following.
☞ Page 54 I/F communication setting

Communication detail settings

Make the settings according to the usage environment.

Property	Value
GOT Net No.	1
GOT Station	18
GOT Communication Port No.	5001
Retry(Times)	3
Startup Time(Sec)	3
Timeout Time(Sec)	3
Delay Time(ms)	0
CPU No. switching GD device first No. (3 points)	500
Module No. switching GD device first No. (16 points)	550
Servo axis switching GD device first No. (16 points)	10

Item	Description	Range
GOT Net No.	Set the network No. of the GOT. (Default: 1)	1 to 239
GOT Station*2	Set the station No. of the GOT. (Default: 18)	1 to 120*3
GOT Communication Port No.*4	Set the GOT port No. for the connection with the Ethernet module. • For Ethernet(MITSUBISHI ELECTRIC),Gateway (Default: 5001*5) • For Ethernet(FX), Gateway (Default: 5019*5)	1024 to 5010, 5014 to 65534 (Except for 5011 to 5013 and 49153 to 49170)
Retry	Set the number of retries to be performed when a communication timeout occurs. When receiving no response after retries, the communication times out. (Default: 3times)	0 to 5times
Startup Time	Specify the time period from the GOT startup until GOT starts the communication with the PLC CPU. (Default: 3sec)	3 to 255sec
Timeout Time*1	Set the time period for a communication to time out. (Default: 3sec)	1 to 90sec
Delay Time	Set the delay time for reducing the load of the network/destination PLC. (Default: 0ms)	0 to 10000 (ms)
CPU No. switching GD device first No. (3 points)	Set the start device number of the GD devices for CPU No. switching. (Default: 500) For the details, refer to the following. ☞ Page 251 Start device number of the GD devices for CPU number switching	<For GT27, GT25, GT23, GS25> 0 to 65520 <For GT21, GS21> 0 to 2032
Module No. switching GD device first No. (16 points)	Set the start device number of the GD devices for module No. switching. (Default: 550) For the details, refer to the following. ☞ Page 252 Start device number of the GD devices for module number switching	<For GT27, GT25, GT23, GS25> 0 to 65520 <For GT21, GS21> 0 to 2032
Servo axis switching GD device first No. (16 points)	Set the servo axis switching GD device first No. (Default: 10) For the details, refer to the following. ☞ Page 253 Servo axis switching GD device first No.	<For GT27, GT25, GT23, GS25> 0 to 65520 <For GT21, GS21> 0 to 2032

*1 To connect the GOT with the Ethernet module (Q Series) in a one-on-one relationship without a hub, set [Timeout Time] to 6 sec. or longer.

*2 Set different values for [GOT Station] of [Detail Setting] and [Station] of [Connected Ethernet Controller Setting].
☞ Page 255 Connected Ethernet controller setting

*3 The range is 1 to 64 when [Driver] is set to [Ethernet(FX), Gateway].

*4 When connecting to the QCPU, LCPU, do not set [5009] for the port No. Otherwise, monitoring becomes unavailable.

*5 When assigning the same driver to the multiple channels, in the communication drivers set as the second and following, the default value of [GOT Communication Port No.] becomes the earliest number in the vacant numbers of No. 6000 and later.

Point

- Communication interface setting by Utility

The communication interface setting can be changed on the Utility's [Communication Settings] after writing [Controller Setting] of project data.

For details on the Utility, refer to the following manual.

GOT2000 Series User's Manual (Utility)

- Precedence in communication settings

When settings are made by GT Designer3 or the Utility, the latest setting is effective.

Start device number of the GD devices for CPU number switching

■Specifying a CPU number with a device

[CPU No.] can be specified with the GOT internal registers (GD devices) by specifying a value (100 to 102) to [CPU No.] in the device setting dialog in GT Designer3.

Set the start device number of the GD devices to be used in [CPU No. switching GD device first No. (3 points)].

Specify [CPU No.] with the three consecutive GD devices, starting the set device number.

When [500] is set to [CPU No. switching GD device first No. (3 points)], GD500 to GD502 are used to specify [CPU No.] as shown in the following table.

CPU No.	GD device	Setting range
100	GD500	1 to 4 Setting an invalid value causes a communication timeout error. Specifying a nonexistent CPU No. or a CPU No. not supporting a multiple CPU system with a device causes a controller error.
101	GD501	
102	GD502	

■Specifying a CPU number with a device on the initially-displayed screen

Set [CPU No. switching GD device first No. (3 points)] so that the values of the GD devices are retained and monitored upon the GOT startup.

■Specifying a CPU number with a device in a multi-channel connection

If the setting range of [CPU No. switching GD device first No. (3 points)] set in each channel overlaps, the monitoring target CPU No. set to each channel is switched simultaneously.

Set [CPU No. switching GD device first No. (3 points)] in each channel so that the setting range does not overlap.

■Specifying a CPU number and a station number with devices in a multi-channel connection

When GD10 to GD25 are used to specify the station No. of an inverter or non-Mitsubishi temperature controller connected, setting [10] to [CPU No. switching GD device first No. (3 points)] in a different channel switches the monitoring target CPU No. and station No. of an inverter or non-Mitsubishi temperature controller set to each channel simultaneously.

Set [CPU No. switching GD device first No. (3 points)] so that the setting range does not overlap the station No. of an inverter or non-Mitsubishi temperature controller.

Start device number of the GD devices for module number switching

■Specifying a module number with a device

In a connection via a simple motion module, [Unit No.] can be specified with the GOT internal registers (GD devices) by specifying a value (100 to 10F) to [Unit No.] in the device setting dialog in GT Designer3.
Set the start device number of the GD devices to be used in [Module No. switching GD device first No. (16 points)].
Specify [Unit No.] with the 16 consecutive GD devices, starting the set device number.
When [550] is set to [Module No. switching GD device first No. (16 points)], GD550 to GD565 are used to specify [Unit No.] as shown in the following table.

Unit No.	GD device	Setting range
100	GD550	The setting range depends on [Unit Type]. • When [MELSEC iQ-R, RnMT/NC/RT, CR800-D], [MELSEC iQ-R, RnMT/RT, CR800-D], [MELSEC-Q/QS, Q17nD/M/NC/DR/DSR, CRnD-700], [MELSEC-Q, Q17nD/M/DR/DSR, CRnD-700], [MELSEC-L], or [MELIPC] is selected for [Controller Type] 00 to FF • When [MELSEC iQ-F] is selected for [Unit Type] 01 to 10 Setting an invalid value causes a device range error.
101	GD551	
102	GD552	
103	GD553	
104	GD554	
105	GD555	
106	GD556	
107	GD557	
108	GD558	
109	GD559	
10A	GD560	
10B	GD561	
10C	GD562	
10D	GD563	
10E	GD564	
10F	GD565	

■Specifying a module number with a device on the initially-displayed screen

Set [Module No. switching GD device first No. (16 points)] so that the values of the GD devices are retained and monitored upon the GOT startup.

■Specifying a module number with a device in a multi-channel connection

If the setting range of [Module No. switching GD device first No. (16 points)] set in each channel overlaps, the module No. of the simple motion module via the servo amplifier device of each channel is switched simultaneously.
Set [Module No. switching GD device first No. (16 points)] for each channel so that the setting range does not overlap.

■Specifying a station number and a module number with devices in a multi-channel connection

When GD10 to GD25 are used to specify the station No. of an inverter or non-Mitsubishi temperature controller connected, setting [10] to [Module No. switching GD device first No. (16 points)] switches the module No. of the simple motion module via the servo amplifier device and the station No. of an inverter or non-Mitsubishi temperature controller set to each channel simultaneously.
Set [Module No. switching GD device first No. (16 points)] so that the setting range does not overlap the station No. of an inverter or non-Mitsubishi temperature controller.

Servo axis switching GD device first No.

■Indirect specification of the servo axis No.

In a connection via a Motion CPU or Simple Motion module, a servo axis No. can be indirectly specified with GOT internal registers (GD devices) by specifying a value (100 to 115) to the axis No. of the servo amplifier device.
Set the start device number of the GD devices to be used in [Servo axis switching GD device first No. (16 points)].
Specify a servo axis number with 16 consecutive GD devices, starting the set device number.
When [10] is set to [Servo axis switching GD device first No. (16 points)], GD10 to GD25 are used to specify a servo axis number as shown in the following table.

Servo axis No.	GD device	Setting range
100	GD10	1 to 64 Setting an invalid value causes a device range error.
101	GD11	
102	GD12	
103	GD13	
104	GD14	
105	GD15	
106	GD16	
107	GD17	
108	GD18	
109	GD19	
110	GD20	
111	GD21	
112	GD22	
113	GD23	
114	GD24	
115	GD25	

■Specifying a servo axis number with a device on the initially-displayed screen

Set [Servo axis switching GD device first No. (16 points)] so that the values of the GD devices are retained and monitored upon the GOT startup.

■Specifying a servo axis number with a device in a multi-channel connection

If the setting rage of [Servo axis switching GD device first No. (16 points)] set in each channel overlaps, the axis No. of the servo amplifier of each channel is switched simultaneously.
Set [Servo axis switching GD device first No. (16 points)] for each channel so that the setting range does not overlap.

■Specifying a station number and a servo axis number with devices in a multi-channel connection

When GD10 to GD25 are used to specify the station No. of an inverter or non-Mitsubishi temperature controller connected, setting [10] to [Servo axis switching GD device first No. (16 points)] switches the axis No. of the servo amplifier and the station No. of an inverter or non-Mitsubishi temperature controller set to each channel simultaneously.
Set [Servo axis switching GD device first No. (16 points)] so that the setting range does not overlap the station No. of an inverter or non-Mitsubishi temperature controller.

GOT Ethernet Setting

The GOT can be connected to a different network by configuring the following setting.

GOT IP address setting

Set the following communication port setting.

- Standard port (When using GT25-W or GS25: Port 1)
- Extended port (When using GT25-W or GS25: Port 2)

GOT Ethernet common setting

Set the following setting which is common to the standard port and the extended port, or port 1 and port 2.

- [Default Gateway]
- [Peripheral S/W Communication Port No.]
- [Transparent Port No.]

IP filter setting

By configuring the IP filter setting, the access from the specific IP address can be permitted or shut off.

For the detailed settings, refer to the following manual.

☞ Page 50 GOT Ethernet Setting

Connected Ethernet controller setting

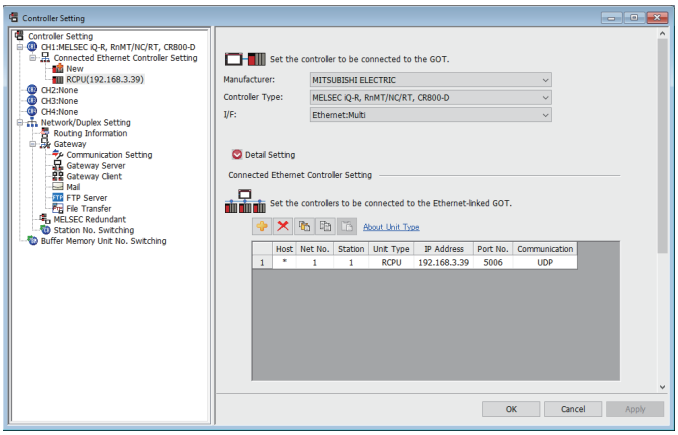

Item	Description	Range
[Host]	The host is displayed. It refers to a station that can be connected without setting a station number. (The host is indicated with an asterisk (*).)	-
[Net No.] *5	Set the network No. of the connected Ethernet module. (Default: 1)	[1] to [239]
[Station] *4*5	Set the station No. of the connected Ethernet module. (Default: 1)	[1] to [64], [1] to [120], or [0] to [120] *6
[Unit Type] *1	Set the type of the connected Ethernet module. (Default: depending on the [Controller Type] setting)	[RCPU] [RnCCPU/RnWCPU] [RnNCCPU] [FX5CPU] [QnUD(P)V/QnUDE(H)] [Q17nNC] [QnD(H)CCPU] [RJ71GN11-T2/RD78G(H)] [RJ71EN71] [FX5-CCLGN-MS/FX5-nSSC-G] [FX5-ENET] [QJ71E71/LJ71E71] [LCPU] [NZ2GF-ETB] [AJ71QE71] [AJ71E71] [CR800] [CRnD-700] [Q17nDSR] [FX]
[IP Address]	Set the IP address of the connected Ethernet module. (Default: depending on the [Controller Type] setting)	[0.0.0.0] to [255.255.255.255]
[Port No.] *2*3	Set the port No. of the connected Ethernet module. (Default: depending on the [Controller Type] setting)	[1024] to [65534]
[Communication] *2	(Default: depending on the [Controller Type] setting)	[UDP], [TCP]

*1 Select one of the following [Unit Type].

GOT connection destination	Unit Type
RCPU,RnMTCPU	[RCPU]
C Controller module (MELSEC iQ-R Series) MELSECWinCPU (MELSEC iQ-R Series)	[RnCCPU/RnWCPU]
CNC C80(R16NCCPU-S1)	[RnNCCPU]
FX5CPU	[FX5CPU]
QnUD(P)V, QnUDE(H), QCPU, Q170MCPU, Q170MSCPU(-S1), Q173D(S)CPU(-S1), Q172D(S)CPU(-S1)	[QnUD(P)V/QnUDE(H)]
Q17nNCCPU	[Q17nNC]
C Controller module (Q series)	[QnD(H)CCPU]

GOT connection destination	Unit Type
CC-Link IE TSN master/local module (MELSEC iQ-R Series) CC-Link IE TSN Plus master/local module (MELSEC iQ-R Series) Motion module (MELSEC iQ-R Series)	[RJ71GN11-T2/RD78G(H)]
Ethernet module (MELSEC iQ-R Series)	[RJ71EN71]
RnENCPU(Port CPU P1)	[RCPU]
RnENCPU(Port P1)	[RJ71EN71]
RnENCPU(Port P2)	-
CC-Link IE TSN master/local module(MELSEC iQ-F Series) Motion module (MELSEC iQ-F Series)	[FX5-CCLGN-MS/FX5-nSSC-G]
Ethernet module (MELSEC iQ-F Series)	[FX5-ENET]
Ethernet module (Q, L Series)	[QJ71E71/LJ71E71]
LCPU	[LCPU]
NZ2GF-ETB	[NZ2GF-ETB]
Ethernet module (QnA Series)	[AJ71QE71]
Ethernet module (A Series)	[AJ71E71]
CR800-R(R16RTCPU)	[CR800]
CRnQ-700,CR750-Q,CR751-Q(Q172DRCPU)	[CRnD-700]
CR800-Q (Q172DSRCPU)	[Q17nDSR]
Ethernet module (FX Series)	[FX]

☞ Page 227 System Configuration

*2 The setting range is as follows:

Type	Port No.	Communication format
[RCPU]	[5001] (For GT21 and GS21, this cannot be set.) (Select this item to enable the network No. and PC No. of the Built-in Ethernet port QCPU.)	[UDP] (fixed)
	[5006]	[UDP] (fixed)
	[5007]	[TCP] (fixed)
[RnCCPU/RnWCPU], [RnNCCPU], [QnD(H)CCPU], [LCPU], [CR800]	[5006]	[UDP] (fixed)
	[5007]	[TCP] (fixed)
[Q17nNC], [RJ71EN71], [RJ71GN11-T2/RD78G(H)], [QJ71E71/LJ71E71], [NZ2GF-ETB]	[5001]	[UDP] (fixed)
	[5002]	[TCP] (fixed)
[FX5-CCLGN-MS/FX5-nSSC-G]	[5001]	[UDP] (fixed)
	[5554]	[TCP] (fixed)
[FX5-ENET]	[5554]	[TCP] (fixed)
	[5555]	[UDP] (fixed)
[QnUD(P)V/QnUDE(H)]	[5001] (For GT21 and GS21, this cannot be set.) (Select this item to enable the network No. and PC No. of the Built-in Ethernet port QCPU.)	[UDP] (fixed)
	[5006]	[UDP] (fixed)
	[5007]	[TCP] (fixed)
[AJ71QE71]	[5001]	[UDP] (fixed)
[AJ71E71]	[1024] to [65535]	[UDP] (fixed)
[CRnD-700]	[5001]	[UDP] (fixed)
[Q17nDSR]	[5001]	[UDP] (fixed)
[FX5CPU]	[5562]	[TCP] (fixed)
[FX]	[5551] (When using FX3U-ENET-L or FX3U-ENET)	[TCP] (fixed)
	[5556] (When using FX3U-ENET-ADP)	[TCP] (fixed)

*3 Match the port number of the CPU and [Port No.] of [Connected Ethernet Controller Setting].

*4 Set different values for [GOT Station] of [Detail Setting] and [Station] of [Connected Ethernet Controller Setting].
☞ Page 249 Communication detail settings

*5 The network No. and PLC No. are unnecessary for Built-in Ethernet port CPU (Port No.: 5006, 5007) and FX5CPU/FXCPU.
Set the numbers of [Network No.] and [Station No.] in the object setting dialog to the numbers of [Net No.] and [Station] in [Connected Ethernet Controller Setting].

*6 The setting range of the station No. differs depending on the [Controller Type] setting.

Type	Station No. setting range
[RCPU] [RnCCPU/RnWCPU] [RnNCCPU] [FX5CPU] [RJ71EN71] [FX5-ENET]	1 to 120
[QnUD(P)V/QnUDE(H)] [QnD(H)CCPU] [LCPU] [Q17nNC] [QJ71E71/LJ71E71] [AJ71QE71] [AJ71E71] [FX] [NZ2GF-ETB]	1 to 64
[RJ71GN11-T2/RD78G(H)] [FX5-CCLGN-MS/FX5-nSSC-G]	0 to 120

When selecting [RCPU] or [QnUD(P)V/QnUDE(H)] for [Controller Type]

When [RCPU] or [QnUD(P)V/QnUDE(H)] is selected for [Controller Type], the port No. setting can be changed.

■When [5001] is set for the port No.:

There is the setting for the network No. and PC No. of the built-in Ethernet port CPU (Port No.: 5001).

Set the network No. and station No. for the object setting to match the network No. and PC No. of the built-in Ethernet port CPU.

However, when connecting to the built-in Ethernet port CPU other than [RCPU] or [QnUD(P)V/QnUDE(H)], do not set [5001] for the port No.. *1*2

Otherwise, monitoring becomes unavailable.

*1 For RCPU, use one with the following firmware version.
R00CPU, R01CPU, R02CPU: 08 or later
Other RCPU: 40 or later

*2 Use the QnUD(P)VCPU with a serial number that contains 17052 or later in the first 5 digits.

■When [5006, 5007] is set for the port No.:

There is no setting for the network No. and PC No. of the built-in Ethernet port CPU (Port No.: 5006, 5007).

Set the same values for [Network No.] and [Station No.] in the object setting dialog as that of [Net No.] and [Station] of [Connected Ethernet Controller Setting].

Connection to the built-in Ethernet port PLC using the communication format “TCP”

When using the FA transparent function during communication with the built-in Ethernet port PLC using the communication format “TCP”, the communication format may be changed from “TCP” to “UDP” and communication with the built-in Ethernet port PLC may start. In this case, communication with the built-in Ethernet port PLC cannot be executed normally. Take the following corrective action.

Phenomenon	Cause	Corrective action
When using the FA transparent function, communication is failed.	There is no setting of “UDP” in the open setting of the built-in Ethernet port PLC.	Add “UDP” to the open setting at the PLC side.
	When using the Ethernet multiple connection, “TCP” and “UDP” are used to the same IP address and the FA transparent function for the channel set to “TCP” is used.	Execute the FA transparent function for the channel set to “UDP”.

Point

• [Connected Ethernet Controller Setting] of GT21 and GS21

Effective range of [Connected Ethernet Controller Setting]

Only [1] to [4] of [Connected Ethernet Controller Setting] can be used for GT21 and GS21.

If [5] onwards are used, the settings are invalid on GT21 and GS21.

[Host] setting

Set [Host] within the range from [1] to [4] in [Connected Ethernet Controller Setting].

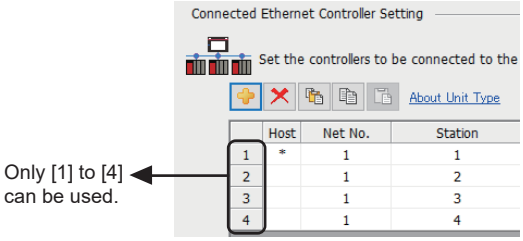

• Parameter reflection function of MELSOFT Navigator

The color of the cells for the items which are reflected to GT Designer3 from MELSOFT Navigator changes to green. Set items, which are displayed in green cells, from the MELSOFT Navigator.

When the settings of N/W No., PLC No., type or IP address are reflected to the parameter from the MELSOFT Navigator, those settings are added. Items set in advance are not deleted. However, if the combination of the N/ W No. and the PLC No. or the IP address overlaps, the item set in advance is overwritten.

• Changing the host on the GOT main unit

The host can be changed by the utility function of the GOT main unit. For the detailed connection method, refer to the following manual.

📖GOT2000 Series User's Manual (Utility)

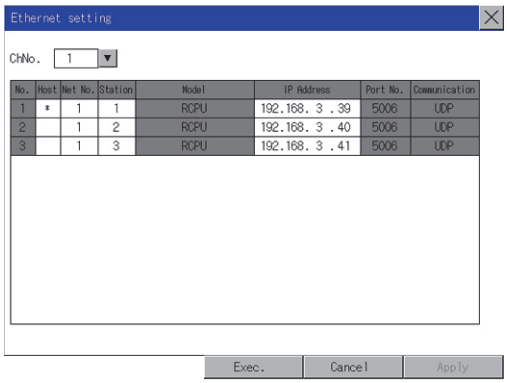

Routing parameter setting

Up to 64 [Transfer Network No.]s can be set.
However, the same transfer network number cannot be set twice or more (multiple times).
Therefore, the one that can access to other station from the request source host GOT is 64 kinds of [Transfer Network No.]s.

Point

Routing parameter setting
When communicating within the host network, routing parameter setting is unnecessary.
For details of routing parameters, refer to the following manual.
📖MELSEC iQ-R CPU Module User's Manual (Application)
📖MELSEC-Q/L Ethernet Interface Module User's Manual (Application)

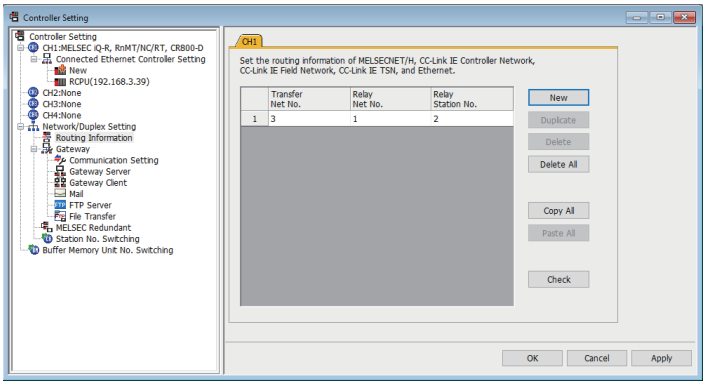

Item	Range
Transfer Network No.	1 to 239
Relay Network No.*1	1 to 239
Relay Station No.*1	0 to 120

*1 To access a different network via Built-in Ethernet port CPU, set the same numbers as [Net No.] and [Station] set in [Connected Ethernet Controller Setting] on GT Designer3.

Point

• Routing parameter setting of relay station
Routing parameter setting may also be necessary for the relay station.For the setting, refer to the following.
☞ Page 261 PLC Side Setting
• Parameter reflection function of MELSOFT Navigator
The color of the cells for the items which are reflected to GT Designer3 from MELSOFT Navigator changes to green. Set items, which are displayed in green cells, from the MELSOFT Navigator.
When the settings of Transfer network No., Relay network No. or Relay station No. are reflected to the parameter from the MELSOFT Navigator, those settings are added. Items set in advance are not deleted.However, if the target network No. overlaps, the item set in advance is overwritten.
The routing information is used manually by the user when the data is created. Therefore, after changing the network configuration by MELSOFT Navigator, create a routing information again. For details of the creation of the routing information, refer to the MELSOFT Navigator help.

4.4 PLC Side Setting

Model		Reference
Built-in Ethernet port RCPU	R00CPU R01CPU R02CPU R04CPU R08CPU R16CPU R32CPU R120CPU R16MTCPU R32MTCPU R64MTCPU R08PCPU R16PCPU R32PCPU R120PCPU R04ENCPU R08ENCPU R16ENCPU R32ENCPU R120ENCPU R08PSFCPU R16PSFCPU R32PSFCPU R120PSFCPU R08SFCPU R16SFCPU R32SFCPU R120SFCPU CNC C80(R16NCCPU-S1) CR800-R(R16RTCPU)	☞ Page 263 Connection to MELSEC iQ-R series Built-in Ethernet port CPU
C Controller module (MELSEC iQ-R series)	R12CCPU-V	☞ Page 284 Connection to C Controller module (MELSEC iQ-R Series)
MELSECWinCPU (MELSEC iQ-R Series)	R102WCPU-W	☞ Page 288 Connection to MELSECWinCPU (MELSEC iQ-R Series)
Built-in Ethernet port (MELSEC iQ-F series)	FX5U FX5UC FX5UJ FX5S	☞ Page 292 Connection to MELSEC iQ-F Series built-in Ethernet port CPU
Built-in Ethernet port QCPU	Q03UDECPU Q04UDEHCPU Q06UDEHCPU Q10UDEHCPU Q13UDEHCPU Q20UDEHCPU Q26UDEHCPU Q50UDEHCPU Q100UDEHCPU Q03UDVCPU Q04UDVCPU Q06UDVCPU Q13UDVCPU Q26UDVCPU Q04UDPVCPU Q06UDPVCPU Q13UDPVCPU Q26UDPVCPU Q172DSCPU Q173DSCPU Q172DCPU-S1 Q173DCPU-S1 Q170MCPU Q170MSCPU Q170MSCPU-S1 CR800-Q(Q172DSRCPU)	☞ Page 302 Connection to MELSEC-Q/L series Built-in Ethernet port CPU ☞ Page 356 Connection to PERIPHERAL I/F

Model		Reference
C Controller module (Q Series)	Q12DCCPU-V Q24DHCCPU-V/VG Q24DHCCPU-LS Q26DHCCPU-LS	☞ Page 322 Connection to C Controller module (Q Series)
Built-in Ethernet port LCPU	L02CPU L26CPU L26CPU-BT L02CPU-P L06CPU-P L26CPU-P L26CPU-PBT L06CPU	☞ Page 302 Connection to MELSEC-Q/L series Built-in Ethernet port CPU
Ethernet module (MELSEC iQ-R Series)	RJ71EN71	☞ Page 275 Connection to Ethernet module (MELSEC iQ-R Series)
Ethernet module (MELSEC iQ-F Series)	FX5-ENET FX5-ENET/IP	☞ Page 296 Connection to Ethernet module (MELSEC iQ-F Series)
Ethernet module (Q Series)	QJ71E71-100 QJ71E71-B5 QJ71E71-B2 QJ71E71	☞ Page 316 Connection to Ethernet module (Q/L Series)
Ethernet module (L Series)	LJ71E71-100	
Ethernet module (QnA Series)	AJ71QE71N3-T AJ71QE71N-B5 AJ71QE71N-B2 AJ71QE71N-T AJ71QE71N-B5T AJ71QE71 AJ71QE71-B5 A1SJ71QE71N3-T A1SJ71QE71N-B5 A1SJ71QE71N-B2 A1SJ71QE71N-T A1SJ71QE71N-B5T A1SJ71QE71-B5 A1SJ71QE71-B2	☞ Page 327 Connection to Ethernet module (QnA Series)
Ethernet module (A Series)	AJ71E71N3-T AJ71E71N-B5 AJ71E71N-B2 AJ71E71N-T AJ71E71N-B5T AJ71E71-S3 A1SJ71E71N3-T A1SJ71E71N-B5 A1SJ71E71N-B2 A1SJ71E71N-T A1SJ71E71N-B5T A1SJ71E71-B5-S3 A1SJ71E71-B2-S3	☞ Page 333 Connection to Ethernet module (A Series)
Ethernet module (FX Series)	FX3U-ENET-L FX3U-ENET FX3U-ENET-ADP	☞ Page 339 Connection to Ethernet module (FX Series)
Built-in Ethernet port FXCPU	FX3GE	☞ Page 346 Connection to Built-in Ethernet port FXCPU (FX3GE)
CNC C70	Q173NCCPU	☞ Page 349 Connection to Display I/F (CNC C70)
CC-Link IE Field Network Ethernet Adapter Module	QJ71GF11-T2	☞ Page 352 Connection to NZ2GF-ETB
CC-Link IE TSN-equipped module	RJ71GN11-T2 RJ71GN11-EIP FX5-CCLGN-MS	☞ Page 361 Connection to CC-Link IE TSN-equipped module
Motion module	RD78G4 RD78G8 RD78G16 RD78G32 RD78G64 RD78GHV RD78GHW	☞ Page 365 Connection to built-in Ethernet port of Motion module ☞ Page 367 Connection to Motion module through Built-in Ethernet port of PLC

Connection to MELSEC iQ-R series Built-in Ethernet port CPU

This section describes the settings of the GOT and Built-in Ethernet port CPU in the following case of system configuration.

☞ Page 263 One-on-one connection and the GOT's communication format is UDP
☞ Page 265 One-on-one connection and the GOT's communication format is TCP
☞ Page 269 Multi-connection and the GOT's communication format is UDP
☞ Page 272 Multi-connection and the GOT's communication format is TCP

Point

- Built-in Ethernet port CPU

For details of Built-in Ethernet port CPU, refer to the following manual.

📖Manuals of MELSEC iQ-R Series

📖Manuals of MELSEC iQ-F Series

- When connecting to multiple GOTs

When connecting two or more GOTs in the Ethernet network, set each [GOT Station] to the GOT.

☞ Page 368 Precautions

One-on-one connection and the GOT's communication format is UDP

■System configuration

For connecting one Built-in Ethernet port CPU to one GOT, the PLC side settings are not required.

Set [Controller Setting] and [Connected Ethernet Controller Setting] on GT Designer3, and then connect Built-in Ethernet port CPU and the GOT.

(MELSEC iQ-R Series)

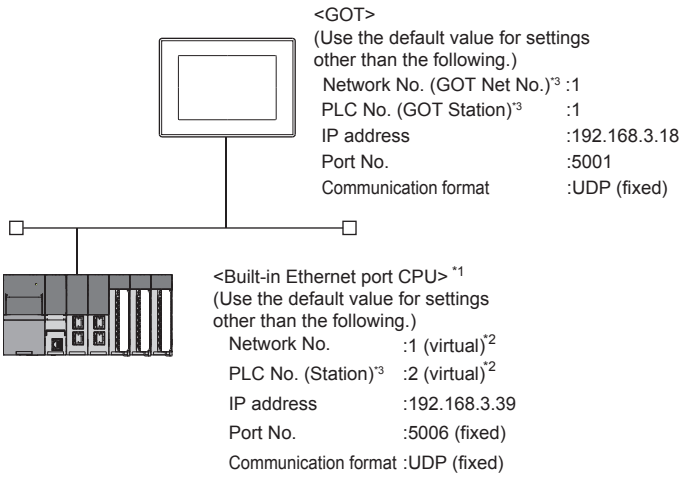

*1 For the settings when using system devices such as a hub, refer to the following.
☞ Page 309 Multi-connection and [MELSOFT Connection Extended Setting] is default value in the PLC
☞ Page 313 Multi-connection and [MELSOFT Connection Extended Setting] is [Use] in the PLC

*2 These setting items do not exist at the PLC side. However, the virtual values must be set on the GOT side.
☞ Page 264 [Controller Setting] and [Connected Ethernet Controller Setting] of GT Designer3

*3 For the following setting contents, the setting names are different on the PLC side and the GOT side.

Contents of setting	Setting names		
	PLC side	GOT side	
		Controller Setting	Connected Ethernet Controller Setting
Network No.	Network No.	GOT Net No.	Net No.
PC No.	Station	GOT Station	Station

■[Controller Setting] and [Connected Ethernet Controller Setting] of GT Designer3

For the setting method of [Controller Setting] and [Connected Ethernet Controller Setting] of GT Designer3, refer to the following.

☞ Page 248 Setting communication interface (Controller Setting)

Point

[Connected Ethernet Controller Setting] when connecting Built-in Ethernet port RCPU and a GOT
The setting items for the network No. and station No. do not exist on the PLC side.
Set the network No. and station No. on the GOT side.
Set the network No. that does not exist on the network system and any station No.

- Controller Setting

Item	Set value
GOT Net No.	1
GOT Station	1
GOT Communication Port No.	5001
Retry	3times
Startup Time	3sec
Timeout Time	3sec
Delay Time	0ms

- GOT Ethernet Setting (standard port)

Item	Set value
GOT IP Address	192.168.3.18
Subnet Mask	255.255.255.0
Default Gateway	0.0.0.0
Peripheral Communication Port No.	5015
Transparent Port No.	5014

- Connected Ethernet Controller Setting

Item		Set value
Ethernet setting No.1	Host	*
	Net No.	1*1
	Station	2*2
	Unit Type	RCPU*3
	IP Address	192.168.3.39
	Port No.	5006
	Communication	UDP

*1 Set the same value as GOT Net No.
*2 Set a value different from the GOT station number.
*3 In the case of CNC C80(R16NCCPU-S1), set to [RnNCCPU].
In the case of CR800-R(R16RTCPU), set to [CR800].

■Checking communication state of Built-in Ethernet port CPU

• When using the Windows Command Prompt

Execute a Ping command at the Command Prompt of Windows.

1) At normal communication

C:\>Ping 192.168.3.39

Reply from 192.168.3.39:bytes=32 time<1ms TTL=32

2) At abnormal communication

C:\>Ping 192.168.3.39

Request timed out.

• At abnormal communication

At abnormal communication, check the following and execute the Ping command again.

Cable connecting condition

Confirmation of switch and network parameter setting

Operation state of PLC CPU (faulty or not)

The IP address of Built-in Ethernet port CPU specified in the ping command

Point

Ethernet diagnostics of GX Works3

Ethernet diagnostics of GX Works3 is available to a Ping test from the PLC.

For details of Ethernet diagnostics of GX Works3, refer to the following manual.

Manuals of MELSEC iQ-R Series

One-on-one connection and the GOT's communication format is TCP

■System configuration

For connecting one Built-in Ethernet port CPU to one GOT, the PLC side settings are not required.

Set [Controller Setting] and [Connected Ethernet Controller Setting] on GT Designer3, and then connect Built-in Ethernet port CPU to the GOT.

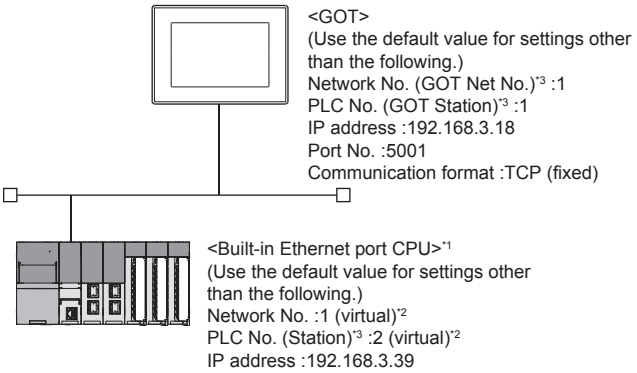

*1 For the settings when using system devices such as a hub, refer to the following.
☞ Page 302 Connection to MELSEC-Q/L series Built-in Ethernet port CPU

*2 These setting items do not exist at the PLC side. However, the virtual values must be set on the GOT side.
☞ Page 267 [Controller Setting] and [Connected Ethernet Controller Setting] of GT Designer3

*3 For the following setting contents, the setting names are different on the PLC side and the GOT side.

Contents of setting	Setting names		
	PLC side	GOT side	
		Controller Setting	Connected Ethernet Controller Setting
Network No.	Network No.	GOT Net No.	Net No.
PC No.	Station	GOT Station	Station

■[Module parameter] of GX Works3

- Built-in Ethernet port

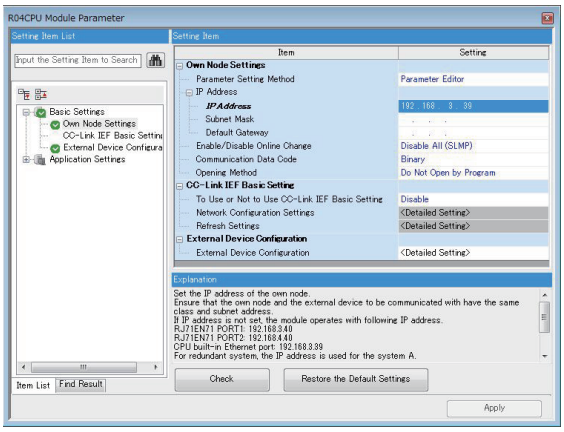

Item	Set value	Setting necessity at GOT connection
IP Address	192.168.3.39 (Use default value)	△
Subnet Mask	-	×
Default Gateway	-	×
Communication data code	(Use default value)	△
External Device Configuration	☞ • External Device Configuration	○

○ : Necessary △ : As necessary × : Not necessary

- External Device Configuration

The setting is required for all the connected GOTs.

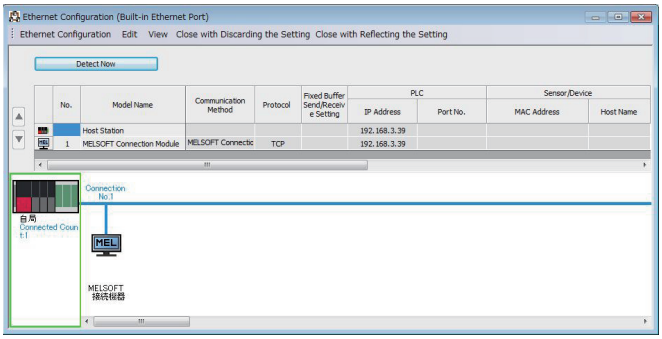

Item	Set value
Protocol	(Use default value)
Open system	MELSOFT connection

■[Controller Setting] and [Connected Ethernet Controller Setting] of GT Designer3

For how to set [Controller Setting] and [Connected Ethernet Controller Setting] on GT Designer3, refer to the following.

☞ Page 248 Setting communication interface (Controller Setting)

Point

[Connected Ethernet Controller Setting] when Built-in Ethernet port RCPU is connected to a GOT

The setting items for the network No. and station No. do not exist on the PLC side.

Set the network No. and station No. on the GOT side.

Set the network No. that does not exist on the network system and any station No.

- Controller Setting

Item	Set value
GOT Net No.	1
GOT Station	1
GOT Communication Port No.	5001
Retry	3times
Startup Time	3sec
Timeout Time	3sec
Delay Time	0ms

- GOT Ethernet Setting (standard port)

Item	Set value
GOT IP Address	192.168.3.18
Subnet Mask	255.255.255.0
Default Gateway	0.0.0.0
Peripheral Communication Port No.	5015
Transparent Port No.	5014

- Connected Ethernet Controller Setting

Item		Set value
Ethernet setting No.1	Host	*
	Net No.	1*1
	Station	2*2
	Unit Type	RCPU*3
	IP Address	192.168.3.39
	Port No.	5007
	Communication	TCP (fixed)

*1 Set the same value as GOT Net No.

*2 Set a value different from the GOT station number.

*3 In the case of CNC C80(R16NCCPU-S1), set to [RnNCCPU].
In the case of CR800-R(R16RTCPU), set to [CR800].

■Checking communication state of Built-in Ethernet port CPU

- When using the Windows Command Prompt

Execute a Ping command at the Command Prompt of Windows.

1) At normal communication

C:\>Ping 192.168.3.39

Reply from 192.168.3.39:bytes=32 time<1ms TTL=32

2) At abnormal communication

C:\>Ping 192.168.3.39

Request timed out.

- At abnormal communication

At abnormal communication, check the following and execute the Ping command again.

Cable connecting condition

Confirmation of switch and network parameter setting

Operation state of PLC CPU (faulty or not)

The IP address of Built-in Ethernet port CPU specified in the ping command

Point

Ethernet diagnostics of GX Works3

Ethernet diagnostics of GX Works3 is available to a Ping test from the PLC.

For details of Ethernet diagnostics of GX Works3, refer to the following manual.

📖Manuals of MELSEC iQ-R Series

Multi-connection and the GOT's communication format is UDP

■System configuration

(MELSEC iQ-R Series)

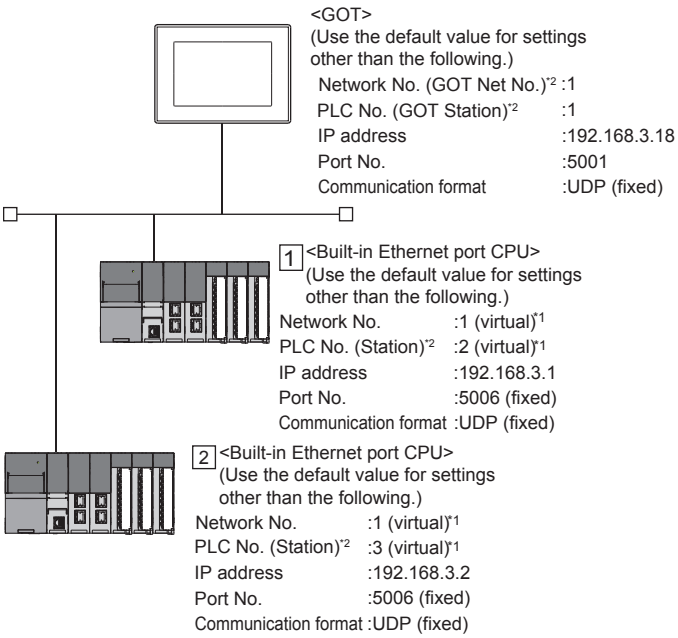

*1 These setting items do not exist at the PLC side. However, the virtual values must be set on the GOT side.
☞ Page 270 [Controller Setting] and [Connected Ethernet Controller Setting] of GT Designer3

*2 For the following setting contents, the setting names are different on the PLC side and the GOT side.

Contents of setting	Setting names		
	PLC side	GOT side	
		Controller Setting	Connected Ethernet Controller Setting
Network No.	Network No.	GOT Net No.	Net No.
PC No.	Station	GOT Station	Station

■[Module parameter] of GX Works3

• Built-in Ethernet port

(For MELSEC iQ-R Series)

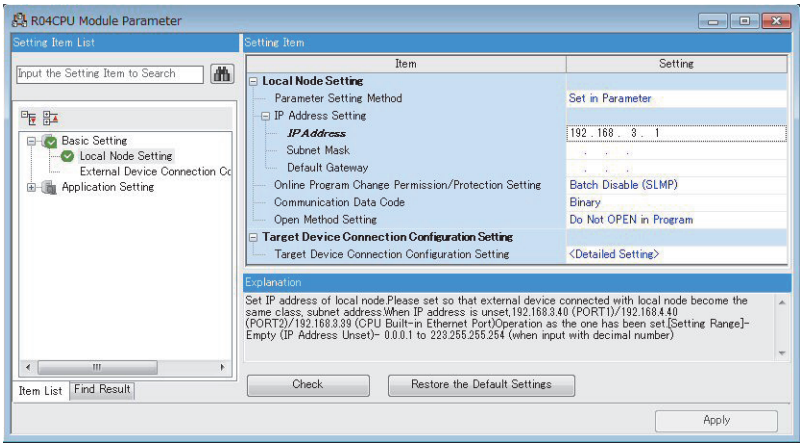

Item	Set value	Setting necessity at GOT connection
IP Address	192.168.3.1	○
Subnet Mask	-	×
Default Gateway	-	×
Online Program Change Permission/Protection Setting	(Use default value)	△
Communication Data Code		△
Open Method Setting		△
Target Device Connection Configuration Setting	-	×

○ : Necessary △ : As necessary × : Not necessary

■[Controller Setting] and [Connected Ethernet Controller Setting] of GT Designer3

For the setting method of [Controller Setting] and [Connected Ethernet Controller Setting] of GT Designer3, refer to the following.

☞ Page 248 Setting communication interface (Controller Setting)

Point

[Connected Ethernet Controller Setting] when connecting Built-in Ethernet port CPU and a GOT

The setting items for the network No. and station No. do not exist on the PLC side.

Set the network No. and station No. on the GOT side.

Set the network No. that does not exist on the network system and any station No.

• Controller Setting

Item	Set value
GOT NET No.	1
GOT Station	1
GOT Communication Port No.	5001
Retry	3times
Startup Time	3sec
Timeout Time	3sec
Delay Time	0ms

• GOT Ethernet Setting (standard port)

Item	Set value
GOT IP Address	192.168.3.18
Subnet Mask	255.255.255.0
Default Gateway	0.0.0.0
Peripheral Communication Port No.	5015
Transparent Port No.	5014

• Connected Ethernet Controller Setting

Item		Set value	
		1	2
Ethernet setting No.1	Host	*	-
	Net No.	1*1	1*1
	Station	2*2	3*2
	Unit Type	RCPU*3	RCPU*3
	IP Address	192.168.3.1	192.168.3.2
	Port No.	5006	5006
	Communication	UDP	UDP

*1 Set the same value as GOT Net No.
*2 Set a value different from the GOT station number and PLC numbers of other PLCs on the same network.
*3 In the case of CNC C80(R16NCCPU-S1), set to [RnNCCPU].

■Checking communication state of Built-in Ethernet port CPU

• When using the Windows Command Prompt

Execute a Ping command at the Command Prompt of Windows.

1) At normal communication

C:\>Ping 192.168.3.1

Reply from 192.168.3.1:bytes=32 time<1ms TTL=32

2) At abnormal communication

C:\>Ping 192.168.3.1

Request timed out.

• At abnormal communication

At abnormal communication, check the following and execute the Ping command again.

Cable connecting condition

Confirmation of switch and network parameter setting

Operation state of PLC CPU (faulty or not)

The IP address of Built-in Ethernet port CPU specified in the ping command

Point

Ethernet diagnostics of GX Works3

Ethernet diagnostics of GX Works3 is available to a Ping test from the PLC.

For details of Ethernet diagnostics of GX Works3, refer to the following manual.

Manuals of MELSEC iQ-R Series

Multi-connection and the GOT's communication format is TCP

■System configuration

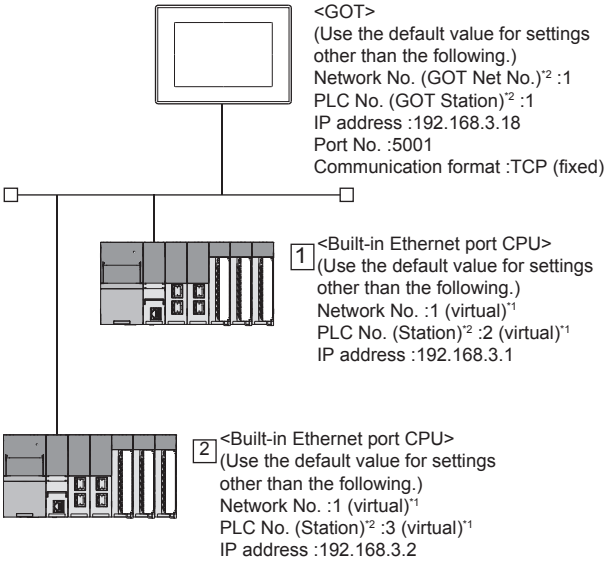

*1 These setting items do not exist at the PLC side. However, the virtual values must be set on the GOT side.
☞ Page 273 [Controller Setting] and [Connected Ethernet Controller Setting] of GT Designer3

*2 For the following setting contents, the setting names are different on the PLC side and the GOT side.

Contents of setting	Setting names		
	PLC side	GOT side	
		Controller Setting	Connected Ethernet Controller Setting
Network No.	Network No.	GOT Net No.	Net No.
PC No.	Station	GOT Station	Station

■[Module parameter] of GX Works3

• Built-in Ethernet port

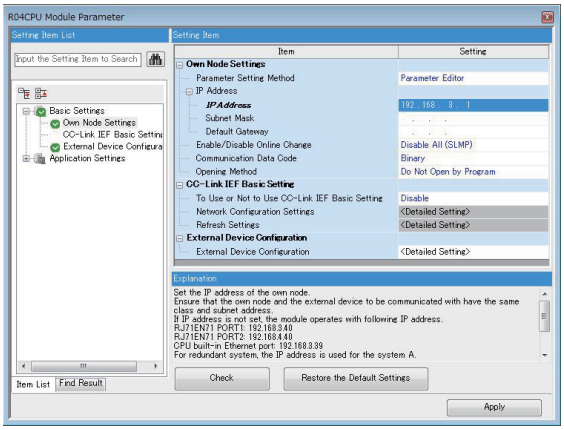

Item	Set value	Setting necessity at GOT connection
IP Address	192.168.3.1	○
Subnet Mask	-	×
Default Gateway	-	×
Online Program Change Permission/Protection Setting	(Use default value)	△
Communication data code		△
Open Method Setting		△
External Device Configuration	☞ • External Device Configuration	○

○ : Necessary △ : As necessary × : Not necessary

• External Device Configuration

The setting is required for all the connected GOTs.

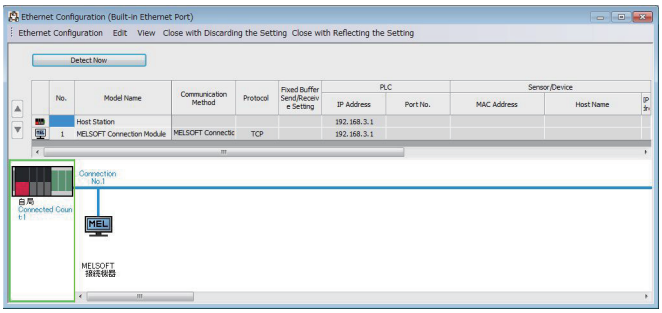

Item	Set value
Protocol	(Use default value)
Open system	MELSOFT connection

■[Controller Setting] and [Connected Ethernet Controller Setting] of GT Designer3

For the setting method of [Controller Setting] and [Connected Ethernet Controller Setting] of GT Designer3, refer to the following.

☞ Page 248 Setting communication interface (Controller Setting)

Point

[Connected Ethernet Controller Setting] when Built-in Ethernet port CPU is connected to a GOT

The setting items for the network No. and station No. do not exist on the PLC side.

Set the network No. and station No. on the GOT side.

Set the network No. that does not exist on the network system and any station No.

• Controller Setting

Item	Set value
GOT Net No.	1
GOT Station	1
GOT Communication Port No.	5001
Retry	3times
Startup Time	3sec
Timeout Time	3sec
Delay Time	0ms

• GOT Ethernet Setting (standard port)

Item	Set value
GOT IP Address	192.168.3.18
Subnet Mask	255.255.255.0
Default Gateway	0.0.0.0
Peripheral Communication Port No.	5015
Transparent Port No.	5014

• Connected Ethernet Controller Setting

Item		Set value	
		1	2
Ethernet setting No.1	Host	*	-
	Net No.	1*1	1*1
	Station	2*2	3*2
	Unit Type	RCPU*3	RCPU*3
	IP Address	192.168.3.1	192.168.3.2
	Port No.	5007	5007
	Communication	TCP (fixed)	TCP (fixed)

*1 Set the same value as GOT Net No.
*2 Set a value different from the GOT station number.
*3 In the case of CNC C80(R16NCCPU-S1), set to [RnNCCPU].

■Checking communication state of Built-in Ethernet port CPU

• When using the Windows Command Prompt

Execute a Ping command at the Command Prompt of Windows.

1) At normal communication

C:\>Ping 192.168.3.1

Reply from 192.168.3.1:bytes=32 time<1ms TTL=32

2) At abnormal communication

\>Ping 192.168.3.1

Request timed out.

• At abnormal communication

At abnormal communication, check the following and execute the Ping command again.

Cable connecting condition

Confirmation of switch and network parameter setting

Operation state of PLC CPU (faulty or not)

The IP address of Built-in Ethernet port CPU specified in the ping command

Point

Ethernet diagnostics of GX Works3

Ethernet diagnostics of GX Works3 is available to a Ping test from the PLC.

For details of Ethernet diagnostics of GX Works3, refer to the following manual.

Manuals of MELSEC iQ-R Series

Connection to Ethernet module (MELSEC iQ-R Series)

This section describes the settings of the GOT and Ethernet module (MELSEC iQ-R Series) in the following case of the system configuration.

Point

- Ethernet module (MELSEC iQ-R Series)

For details of the Ethernet module (MELSEC iQ-R Series), refer to the following manual.

Manuals of MELSEC iQ-R Series

- When connecting to multiple GOTs

When connecting two or more GOTs in the Ethernet network, set each [GOT Station] to the GOT.

☞ Page 368 Precautions

When the GOT's communication format is UDP

■System configuration

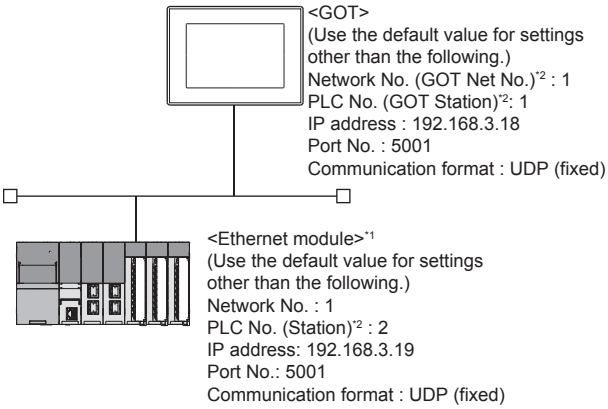

*1 The Ethernet module is mounted on the base unit slot 0.
The Start XY No. of the Ethernet module is set to "0".

*2 For the following setting contents, the setting names are different on the PLC side and the GOT side.

Contents of setting	Setting names		
	PLC side	GOT side	
		Controller Setting	Connected Ethernet Controller Setting
Network No.	Network No.	GOT Net No.	Net No.
PC No.	Station	GOT Station	Station

■[Module parameter] of GX Works3

- Module parameter of Ethernet module (MELSEC iQ-R Series)*1

*1 Set [Module parameter] of the port under [Module information].

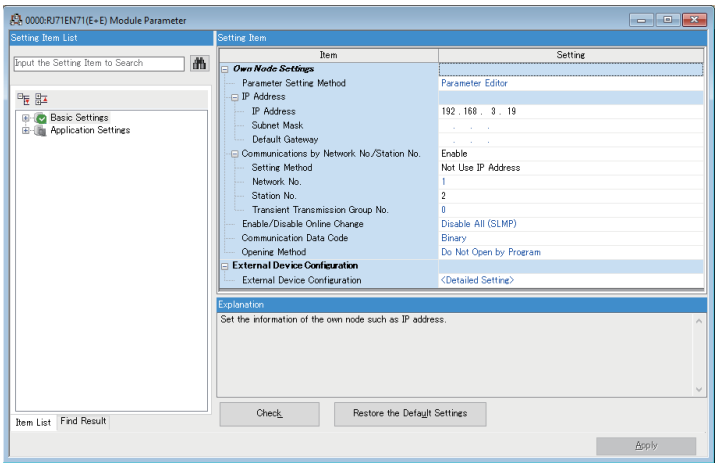

Item	Set value	Setting necessity at GOT
IP Address	192.168.3.19	○
Subnet Mask	-	×
Default Gateway	-	×
Communications by Network No./Station No.	Enable	○
Setting Method	Not Use IP Address	○
Network No.*2	1	○
Station No.*3	2	○
Transient Transmission Group No.	(Use default value)	×
Enable/Disable Online Change		×
Communication Data Code		×
Opening Method		×
External Device Configuration	-	×

○ : Necessary △ : As necessary × : Not necessary

*2 Set the same network No. as that of the GOT.

*3 Do not set the same station No. as that of the GOT.

• Routing setting

Up to 238 [Target Station Network No.]s can be set.

However, the same target station network number cannot be set twice or more (multiple times).

Therefore, the one that can access to other station from the request source host GOT is 238 kinds of [Target Station Network No.]s.

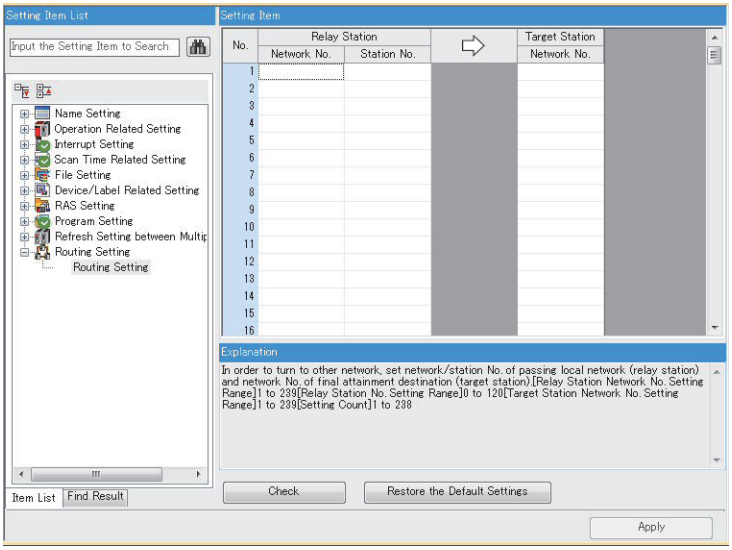

Item	Range
Target Station network No.	1 to 239
Relay Station network No.	1 to 239
Relay station No.	0 to 120

Point

Routing parameter setting of request source

Routing parameter setting is also necessary for the request source GOT.

For the setting, refer to the following.

☞ Page 260 Routing parameter setting

• Communication confirmation

The communication status can be checked with the LINK LED on the Ethernet module.

For confirming the communication state, refer to the following.

☞ Page 279 Confirming the communication state of Ethernet module

■[Controller Setting] and [Connected Ethernet Controller Setting] of GT Designer3

For the setting method of [Controller Setting] and [Connected Ethernet Controller Setting] of GT Designer3, refer to the following.

☞ Page 248 Setting communication interface (Controller Setting)

Point

[Connected Ethernet Controller Setting] when Built-in Ethernet port RCPU is connected to a GOT
The setting items for the network No. and station No. do not exist on the PLC side.
Set the network No. and station No. on the GOT side.
Set the network No. that does not exist on the network system.

- Controller Setting

Item	Set value
GOT Net No.	1
GOT Station	1
GOT Communication Port No.	5001
Retry	3 times
Startup Time	3 sec
Timeout Time	3 sec
Delay Time	0ms

- GOT Ethernet Setting (standard port)

Item	Set value
GOT IP Address	192.168.3.18
Subnet Mask	255.255.255.0
Default Gateway	0.0.0.0
Peripheral Communication Port No.	5015
Transparent Port No.	5014

- Connected Ethernet Controller Setting

Item		Set value
Ethernet setting No.1	Host	*
	Net No.	1*1
	Station	2*2
	Unit Type	RJ71EN71
	IP Address	192.168.3.19
	Port No.	5001
	Communication	UDP

*1 Set the same value as GOT Net No.
*2 Set a value different from the GOT station number.

■Confirming the communication state of Ethernet module

• When using the Windows Command Prompt

Execute a Ping command at the Command Prompt of Windows.

1) At normal communication

C:\>Ping 192.168.3.19

Reply from 192.168.3.19:bytes=32 time<1ms TTL=32

2) At abnormal communication

C:\>Ping 192.168.3.19

Request timed out.

• At abnormal communication

At abnormal communication, check the following and execute the Ping command again.

Cable connecting condition

Confirmation of switch and network parameter setting

Operation state of PLC CPU (faulty or not)

The IP address of Built-in Ethernet port CPU specified in the ping command

Point

Ethernet diagnostics of GX Works3

Ethernet diagnostics of GX Works3 is available to a Ping test from the PLC.

For details of Ethernet diagnostics of GX Works3, refer to the following manual.

Manuals of MELSEC iQ-R Series

When the GOT's communication format is TCP

■System configuration

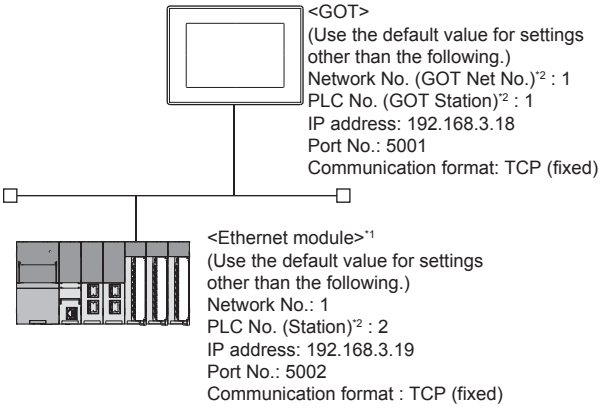

*1 The Ethernet module is mounted on the base unit slot 0.
The Start XY No. of the Ethernet module is set to "0".

*2 For the following setting contents, the setting names are different on the PLC side and the GOT side.

Contents of setting	Setting names		
	PLC side	GOT side	
		Controller Setting	Connected Ethernet Controller Setting
Network No.	Network No.	GOT Net No.	Net No.
PC No.	Station	GOT Station	Station

■[Module parameter] of GX Works3

- Module parameter of Ethernet module (MELSEC iQ-R Series)*1

*1 Set [Module parameter] of the port under [Module information].

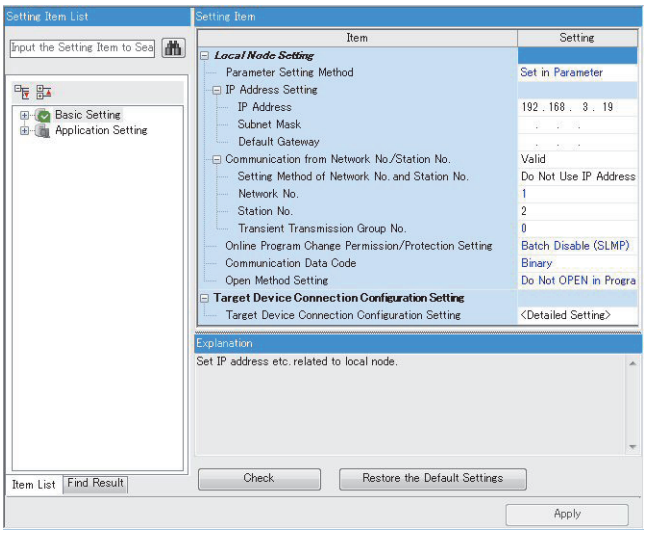

Item	Set value	Setting necessity at GOT
IP Address	192.168.3.19	○
Subnet Mask	-	×
Default Gateway	-	×
Setting Method of Network No. and Station No.	Do Not Use IP Address	×
Network No.*2	1	○
Station No.*3	2	○
Transient Transmission Group No.	(Use default value)	×
Online Program Change Permission/Protection Setting		×
Communication Data Code		×
Open Method Setting		×
Target Device Connection Configuration Setting	☞ • Target Device connection Configuration Setting	○

○ : Necessary △ : As necessary × : Not necessary

*2 Set the same network No. as that of the GOT.

*3 Do not set the same station No. as that of the GOT.

• Target Device connection Configuration Setting

The setting is required for all the connected GOTs.

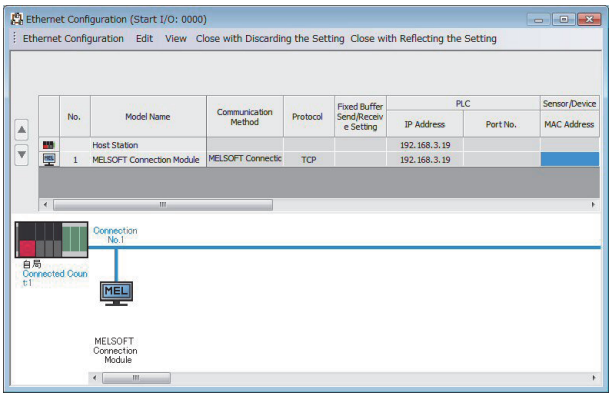

Item	Set value
Protocol	(Use default value)
Open system	MELSOFT connection (fixed)
Host station port No.	(Use default value)

Point

When changing the module parameter

After writing module parameters to the PLC CPU, turn the PLC CPU OFF then back ON again, or reset the PLC CPU.

• Routing setting

Up to 238 [Target Station Network No.]s can be set.

However, the same target station network number cannot be set twice or more (multiple times).

Therefore, the one that can access to other station from the request source host GOT is 238 kinds of [Target Station Network No.]s.

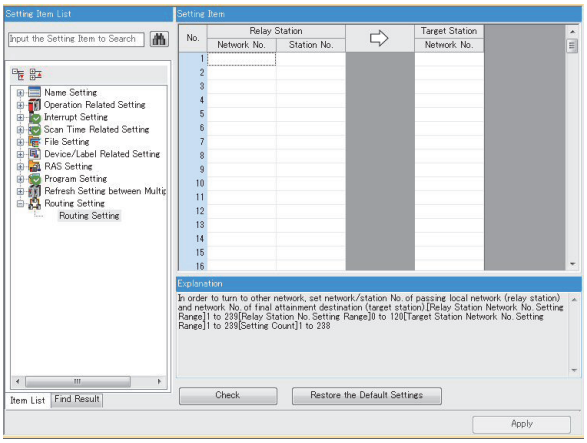

Item	Range
Target Station network No.	1 to 239
Relay Station network No.	1 to 239
Relay station No.	0 to 120

Point

Routing parameter setting of request source

Routing parameter setting is also necessary for the request source GOT.

For the setting, refer to the following.

☞ Page 260 Routing parameter setting

• Communication confirmation

The communication status can be checked with the LINK LED on the Ethernet module.

For confirming the communication state, refer to the following.

☞ Page 283 Confirming the communication state of Ethernet module

■[Controller Setting] and [Connected Ethernet Controller Setting] of GT Designer3

For the setting method of [Controller Setting] and [Connected Ethernet Controller Setting] of GT Designer3, refer to the following.

☞ Page 248 Setting communication interface (Controller Setting)

• Controller Setting

Item	Set value
GOT Net No.	1
GOT Station	1
GOT Communication Port No.	5001
Retry	3 times
Startup Time	3 sec
Timeout Time	3 sec
Delay Time	0ms

• GOT Ethernet Setting (standard port)

Item	Set value
GOT IP Address	192.168.3.18
Subnet Mask	255.255.255.0
Default Gateway	0.0.0.0
Peripheral Communication Port No.	5015
Transparent Port No.	5014

• Connected Ethernet Controller Setting

Item		Set value
Ethernet setting No.1	Host	*
	Net No.	1
	Station	2
	Unit Type	RJ71EN71
	IP Address	192.168.3.19
	Port No.	5002
	Communication	TCP

■Confirming the communication state of Ethernet module

• When using the Windows Command Prompt

Execute a Ping command at the Command Prompt of Windows.

1) At normal communication

C:\>Ping 192.168.3.19

Reply from 192.168.3.19:bytes=32 time<1ms TTL=32

2) At abnormal communication

C:\>Ping 192.168.3.19

Request timed out.

• At abnormal communication

At abnormal communication, check the following and execute the Ping command again.

Cable connecting condition

Confirmation of switch and network parameter setting

Operation state of PLC CPU (faulty or not)

The IP address of Built-in Ethernet port CPU specified in the ping command

Point

Ethernet diagnostics of GX Works3

Ethernet diagnostics of GX Works3 is available to a Ping test from the PLC.

For details of Ethernet diagnostics of GX Works3, refer to the following manual.

📖Manuals of MELSEC iQ-R Series

Connection to C Controller module (MELSEC iQ-R Series)

This section describes the settings of the GOT and C Controller module (MELSEC iQ-R Series) in the following case of system configuration.
Use CW Configurator for the C Controller module (MELSEC iQ-R Series) communication settings.

Point

- C Controller module (MELSEC iQ-R Series)

For details of C Controller module (MELSEC iQ-R Series), refer to the following manual.
Manuals of C Controller module (MELSEC iQ-R Series)

- When connecting to multiple GOTs

When connecting two or more GOTs in the Ethernet network, set each [GOT Station] to the GOT.
☞ Page 368 Precautions

System configuration

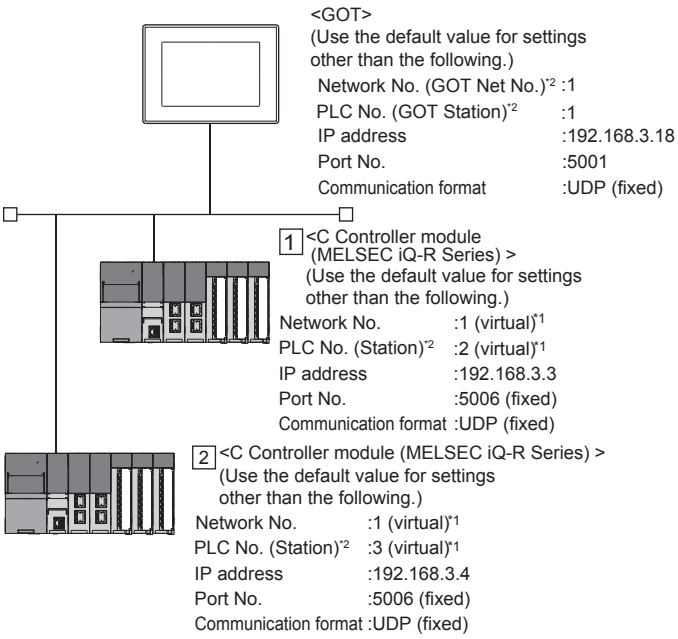

*1 These setting items do not exist at the PLC side. However, the virtual values must be set on the GOT side.
☞ Page 286 [Controller Setting] and [Connected Ethernet Controller Setting] of GT Designer3

*2 For the following setting contents, the setting names are different on the PLC side and the GOT side.

Contents of setting	Setting names		
	PLC side	GOT side	
		Controller Setting	Connected Ethernet Controller Setting
Network No.	Network No.	GOT Net No.	Net No.
PC No.	Station	GOT Station	Station

[Module parameter] of CW Configurator

■Module parameter

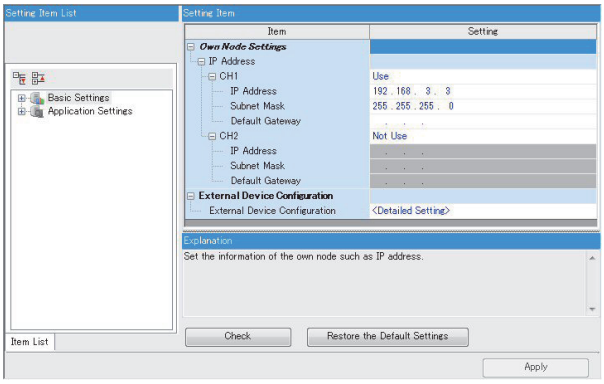

Item*1	Set value	Setting necessity at GOT connection
CH1	Use	×
IP Address	192.168.3.3	×
Subnet Mask	-	×
Default Gateway	-	×
CH2	Not Use	×
IP Address	-	×
Subnet Mask	-	×
Default Gateway	-	×
External Device Configuration	-	×

○ : Necessary △ : As necessary × : Not necessary

*1 Set the IP address corresponding to the CH No. to be used to connect to the GOT.

[Controller Setting] and [Connected Ethernet Controller Setting] of GT Designer3

For the setting method of [Controller Setting] and [Connected Ethernet Controller Setting] of GT Designer3, refer to the following.

☞ Page 248 Setting communication interface (Controller Setting)

Point

[Connected Ethernet Controller Setting] when Built-in Ethernet port CPU is connected to a GOT
The setting items for the network No. and station No. do not exist on the PLC side.
Set the network No. and station No. on the GOT side.
Set the network No. that does not exist on the network system and any station No.

■Controller Setting

Item	Set value
GOT NET No.	1
GOT Station	1
GOT Communication Port No.	5001
Retry	3times
Startup Time	3sec
Timeout Time	3sec
Delay Time	0ms

■GOT Ethernet Setting (standard port)

Item	Set value
GOT IP Address	192.168.3.18
Subnet Mask	255.255.255.0
Default Gateway	0.0.0.0
Peripheral Communication Port No.	5015
Transparent Port No.	5014

■Connected Ethernet Controller Setting

Item		Set value	
		1	2
Ethernet setting No.1	Host	*	-
	Net No.	1*1	1*1
	Station	2*2	3*2
	Unit Type	RnCCPU/RnWCPU	RnCCPU/RnWCPU
	IP Address	192.168.3.3	192.168.3.4
	Port No.*3	5006	5006
	Communication*3	UDP	UDP

*1 Set the same value as GOT Net No.
*2 Set a value different from the GOT station number and PLC numbers of other PLCs on the same network.
*3 The following [Port No.] and [Communication format] can also be set.
[Port No.]: 5007
[Communication]: TCP

Checking communication state of C Controller module (MELSEC iQ-R Series)

■When using the Windows Command Prompt

Execute a Ping command at the Command Prompt of Windows.

- At normal communication

C:\>Ping 192.168.3.3

Reply from 192.168.3.3:bytes=32 time<1ms TTL=32

- At abnormal communication

C:\>Ping 192.168.3.3

Request timed out.

■At abnormal communication

At abnormal communication, check the following and execute the Ping command again.

- Cable connecting condition
- Confirmation of switch and network parameter setting
- Operation state of PLC CPU (faulty or not)
- The IP address of C Controller module (MELSEC iQ-R Series) specified in the ping command

Point

Ethernet diagnostics of CW Configurator

Ethernet diagnostics of CW Configurator is available to a Ping test from the PLC.

For details of Ethernet diagnostics of CW Configurator, refer to the following manual.

Manuals of C Controller module (MELSEC iQ-R Series)

Connection to MELSECWinCPU (MELSEC iQ-R Series)

This section describes the settings of the GOT and MELSECWinCPU (MELSEC iQ-R Series) in the following system configuration.

Point

For the details of MELSECWinCPU (MELSEC iQ-R Series), refer to the following.

Manuals of MELSECWinCPU (MELSEC iQ-R Series)

System configuration

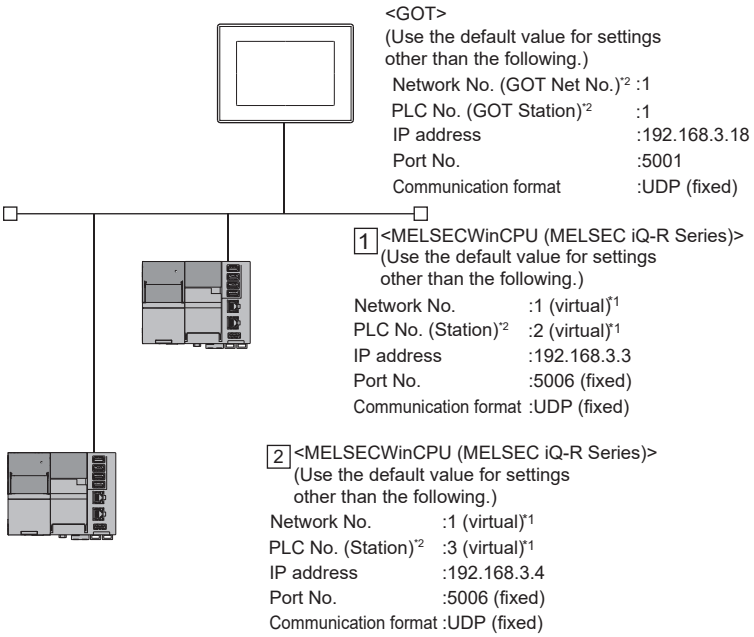

*1 These setting items do not exist at the PLC side. However, the virtual values must be set on the GOT side.
☞ Page 290 [Controller Setting] and [Connected Ethernet Controller Setting] of GT Designer3

*2 For the following setting contents, the setting names are different on the PLC side and the GOT side.

Contents of setting	Setting names		
	PLC side	GOT side	
		Controller Setting	Connected Ethernet Controller Setting
Network No.	Network No.	GOT Net No.	Net No.
PC No.	Station	GOT Station	Station

[Internet Protocol Version 4 (TCP/IPv4) Properties]

Configure communication settings for MELSECWinCPU (MELSEC iQ-R Series) in [Internet Protocol Version 4 (TCP/IPv4) Properties] in Windows installed in MELSECWinCPU (MELSEC iQ-R Series).

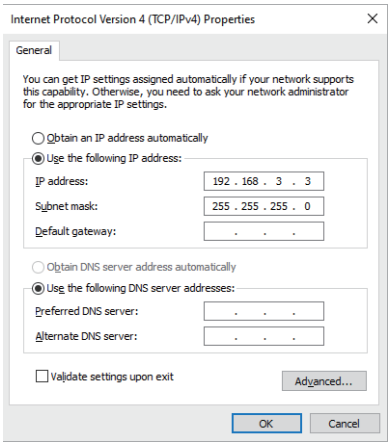

Item*1	Set value		Setting necessity at GOT connection
	1	2	
IP address	192.168.3.3	192.168.3.4	○
Subnet mask	255.255.255.0	255.255.255.0	○
Default gateway	-	-	×
Preferred DNS server	-	-	×
Alternative DNS server	-	-	×

○ : Necessary △ : As necessary × : Not necessary

*1 Set the IP address corresponding to the CH No. to be used to connect to the GOT.

Firewall settings

Firewall settings are required to connect the GOT with MELSECWinCPU (MELSEC iQ-R Series).

For details, refer to the following.

📖MELSEC iQ-R MELSECWinCPU Module User's Manual

[Controller Setting] and [Connected Ethernet Controller Setting] of GT Designer3

For the setting method of [Controller Setting] and [Connected Ethernet Controller Setting] of GT Designer3, refer to the following.

☞ Page 248 Setting communication interface (Controller Setting)

Point

[Connected Ethernet Controller Setting] when Built-in Ethernet port CPU is connected to a GOT
The setting items for the network No. and station No. do not exist on the PLC side.
Set the network No. and station No. on the GOT side.
Set the network No. that does not exist on the network system and any station No.

■Controller Setting

Item	Set value
GOT NET No.	1
GOT Station	1
GOT Communication Port No.	5001
Retry	3times
Startup Time	3sec
Timeout Time	3sec
Delay Time	0ms

■GOT Ethernet Setting (standard port)

Item	Set value
GOT IP Address	192.168.3.18
Subnet Mask	255.255.255.0
Default Gateway	0.0.0.0
Peripheral Communication Port No.	5015
Transparent Port No.	5014

■Connected Ethernet Controller Setting

Item		Set value	
		1	2
Ethernet setting No.1	Host	*	-
	Net No.	1*1	1*1
	Station	2*2	3*2
	Unit Type	RnCCPU/RnWCPU	RnCCPU/RnWCPU
	IP Address	192.168.3.3	192.168.3.4
	Port No.*3	5006	5006
	Communication*3	UDP	UDP

*1 Set the same value as GOT Net No.
*2 Set a value different from the GOT station number and PLC numbers of other PLCs on the same network.
*3 The following [Port No.] and [Communication format] can also be set.
[Port No.]: 5007
[Communication]: TCP

Checking the communication status of MELSECWinCPU (MELSEC iQ-R Series)

■When using the Windows Command Prompt

Execute a Ping command at the Command Prompt of Windows.

- At normal communication

C:\>Ping 192.168.3.3

Reply from 192.168.3.3:bytes=32 time<1ms TTL=32

- At abnormal communication

C:\>Ping 192.168.3.3

Request timed out.

■At abnormal communication

At abnormal communication, check the following and execute the Ping command again.

- Cable connecting condition
- Confirmation of switch and network parameter setting
- Operation state of PLC CPU (faulty or not)
- IP address of MELSECWinCPU (MELSEC iQ-R Series) specified by a ping command

Point

Ethernet diagnostics of CW Configurator is available to a Ping test from the PLC.
For details of Ethernet diagnostics of CW Configurator, refer to the following manual.
📖MELSEC iQ-R MELSECWinCPU Module User's Manual

Connection to MELSEC iQ-F Series built-in Ethernet port CPU

This section describes the settings of the GOT and Built-in Ethernet port CPU in the following case of system configuration.

Point

- Connecting to Built-in Ethernet port CPU

For details of Built-in Ethernet port CPU, refer to the following manual.

Manuals of MELSEC iQ-F Series

- When connecting to multiple GOTs

When connecting two or more GOTs in the Ethernet network, set each [GOT Station] to the GOT.

Page 368 Precautions

System configuration

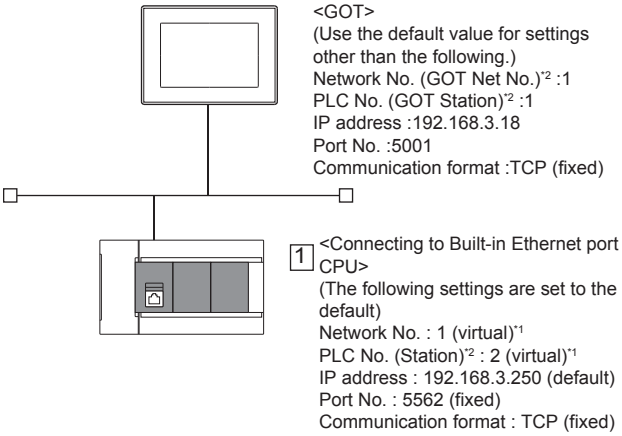

*1 These setting items do not exist at the PLC side. However, the virtual values must be set on the GOT side.
Page 294 [Controller Setting] and [Connected Ethernet Controller Setting] of GT Designer3

*2 For the following setting contents, the setting names are different on the PLC side and the GOT side.

Contents of setting	Setting names		
	PLC side	GOT side	
		Controller Setting	Connected Ethernet Controller Setting
Network No.	Network No.	GOT Net No.	Net No.
PC No.	Station	GOT Station	Station

[Module parameter] of GX Works3

■Built-in Ethernet port

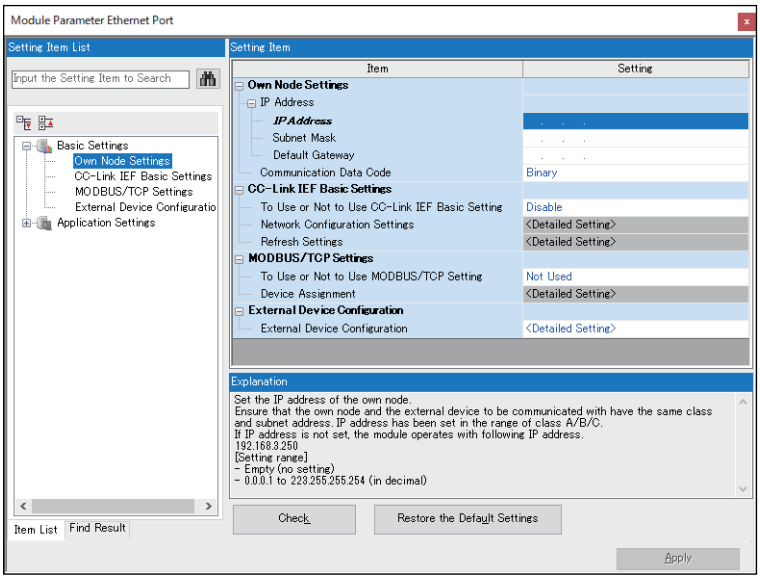

Item	Set value	Setting necessity at GOT connection
IP Address	192.168.3.250 (Use default value)	△
Subnet Mask	-	×
Default Gateway	-	×
Communication Data Code	(Use default value)	△
Target Device Connection Configuration Setting	☞ Page 293 Target Device connection Configuration Setting	○

○ : Necessary △ : As necessary × : Not necessary

■Target Device connection Configuration Setting

The setting is required for all the connected GOTs[*1].

*1 Even if the target device connection configuration setting is not executed, 1 GOT can be connected. When connecting to the PLC in Ethernet connection with programming tools such as GX Works3, these programming tools and PLC may not be connected. In this case, the setting is required for all the GOTs.

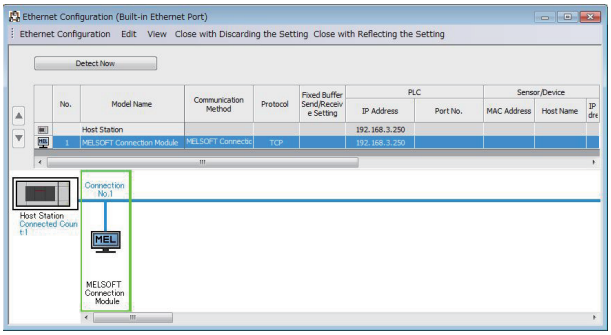

Item	Set value
Protocol	(Use default value)
Open system	MELSOFT connection (fixed)
Host station port No.	(Use default value)

[Controller Setting] and [Connected Ethernet Controller Setting] of GT Designer3

For the setting method of [Controller Setting] and [Connected Ethernet Controller Setting] of GT Designer3, refer to the following.

☞ Page 248 Setting communication interface (Controller Setting)

Point

[Connected Ethernet Controller Setting] when Built-in Ethernet port CPU is connected to a GOT
The setting items for the network No. and station No. do not exist on the PLC side.
Set the network No. and station No. on the GOT side.
Set the network No. that does not exist on the network system and any station No.

■Controller Setting

Item	Set value
GOT Net No.	1
GOT Station	1
GOT Communication Port No.	5001
Retry	3times
Startup Time	3sec
Timeout Time	3sec
Delay Time	0ms

■GOT Ethernet Setting (standard port)

Item	Set value
GOT IP Address	192.168.3.18
Subnet Mask	255.255.255.0
Default Gateway	0.0.0.0
Peripheral Communication Port No.	5015
Transparent Port No.	5014

■Connected Ethernet Controller Setting

Item		Set value
Ethernet setting No.1	Host	*
	Net No.	1*1
	Station	2*2
	Unit Type	FX5CPU
	IP Address	192.168.3.250
	Port No.	5562 (fixed)
	Communication	TCP (fixed)

*1 Set the same value as GOT Net No.
*2 Set a value different from the GOT station number and PLC numbers of other PLCs on the same network.

Checking communication state of Built-in Ethernet port CPU

■When using the Windows Command Prompt

Execute a Ping command at the Command Prompt of Windows.

- At normal communication

C:\>Ping 192.168.3.250

Reply from 192.168.3.250:bytes=32 time<1ms TTL=32

- At abnormal communication

C:\>Ping 192.168.3.250

Request timed out.

■At abnormal communication

At abnormal communication, check the following and execute the Ping command again.

- Cable connecting condition
- Confirmation of switch and network parameter setting
- Operation state of PLC CPU (faulty or not)
- The IP address of Built-in Ethernet port CPU specified in the ping command

Connection to Ethernet module (MELSEC iQ-F Series)

This section describes the settings of the GOT and Ethernet module (MELSEC iQ-F Series) in the following system configurations.

Point

- Ethernet module (MELSEC iQ-F Series)

For details of the Ethernet module (MELSEC iQ-F Series), refer to the following manual.

Manuals of MELSEC iQ-F Series

- When connecting to multiple GOTs

When connecting two or more GOTs in the Ethernet network, set each [GOT Station] to the GOT.

☞ Page 368 Precautions

When the GOT's communication format is UDP

■System configuration

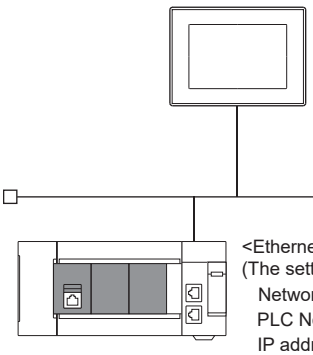

<GOT>
(The settings other than the following are set to the default)

Network No. (GOT Net No.)*2	: 1
PLC No. (GOT Station)*2	: 1
IP address	: 192.168.3.18
Port No.	: 5001
Communication format	: UDP (fixed)

<Ethernet module>
(The settings other than the following are set to the default)

Network No.	: 1 (virtual)*1
PLC No. (Station)*2	: 2 (virtual)*1
IP address	: 192.168.3.251 (Default)
Port No.	: 5555 (fixed)
Communication format	: UDP (fixed)

*1 These setting items do not exist at the PLC side. However, the virtual values must be set on the GOT side.
☞ Page 297 [Controller Setting] and [Connected Ethernet Controller Setting] of GT Designer3

*2 For the following setting contents, the setting names are different on the PLC side and the GOT side.

Contents of setting	Setting names		
	PLC side	GOT side	
		Controller Setting	Connected Ethernet Controller Setting
Network No.	Network No.	GOT Net No.	Net No.
PC No.	Station	GOT Station	Station

■[Module parameter] of GX Works3

For the connection with FX5-ENET or FX5-ENET/IP, use GX Works3 version 1.075D or later.

- Module parameter of Ethernet module (MELSEC iQ-F Series)

Set [Module parameter] of the port under [Module information].

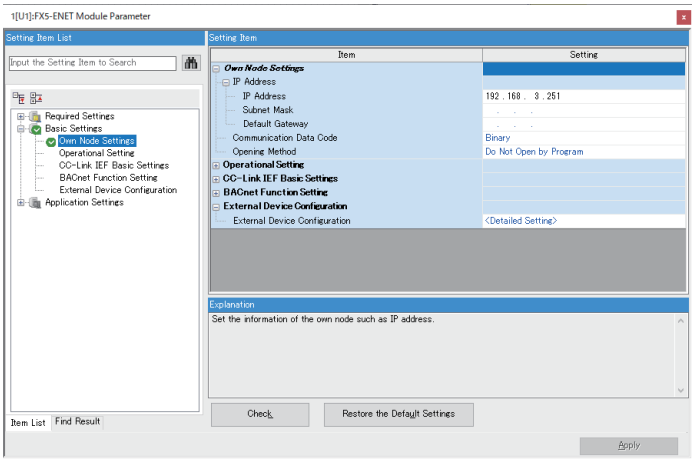

Item	Set value	Setting necessity at GOT connection
IP Address	192.168.3.251	○
Subnet Mask	-	×
Default Gateway	-	×
Communication Data Code	(Use default value)	×
Opening Method	(Use default value)	×
External Device Configuration	-	×

○ : Necessary △ : As necessary × : Not necessary

■[Controller Setting] and [Connected Ethernet Controller Setting] of GT Designer3

For the setting method of [Controller Setting] and [Connected Ethernet Controller Setting] of GT Designer3, refer to the following.

☞ Page 248 Setting communication interface (Controller Setting)

Point

[Connected Ethernet Controller Setting] when Ethernet module (MELSEC iQ-F Series) is connected to a GOT
The setting items for the network No. and station No. do not exist on the PLC side.
Set the network No. and station No. on the GOT side.
Set the network No. that does not exist on the network system and any station No.

- Controller Setting

Item	Set value
GOT Net No.	1
GOT Station	1
GOT Communication Port No.	5001
Retry	3times
Startup Time	3sec
Timeout Time	3sec
Delay Time	0ms

• GOT Ethernet Setting (standard port)

Item	Set value
GOT IP Address	192.168.3.18
Subnet Mask	255.255.255.0
Default Gateway	0.0.0.0
Peripheral Communication Port No.	5015
Transparent Port No.	5014

• Connected Ethernet Controller Setting

Item		Set value
Ethernet setting No.1	Host	*
	Net No.	1 *1
	Station	2 *2
	Unit Type	FX5-ENET
	IP Address	192.168.3.251
	Port No.	5555
	Communication	UDP

*1 Set the same value as GOT Net No.
*2 Set a value different from the GOT station number.

■Confirming the communication state of Ethernet module

• When using the Windows Command Prompt

Execute a Ping command at the Command Prompt of Windows.

1) At normal communication

C:\>Ping 192.168.3.251

Reply from 192.168.3.251:bytes=32 time<1ms TTL=32

2) At abnormal communication

C:\>Ping 192.168.3.251

Request timed out.

• At abnormal communication

At abnormal communication, check the following and execute the Ping command again.

Cable connecting condition

Confirmation of switch and network parameter setting

Operation state of PLC CPU (faulty or not)

IP address of the Ethernet module specified by Ping command

Point

Ethernet diagnostics of GX Works3

Ethernet diagnostics of GX Works3 is available to a Ping test from the PLC.

For details of Ethernet diagnostics of GX Works3, refer to the following manual.

📖Manuals of MELSEC iQ-F Series

When the GOT's communication format is TCP

■System configuration

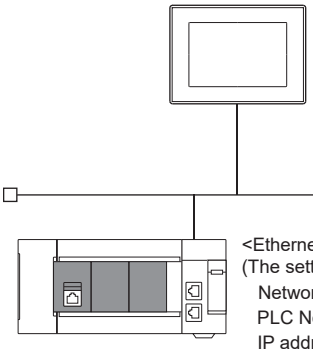

<GOT>
(The settings other than the following are set to the default)

Network No. (GOT Net No.)*2	: 1
PLC No. (GOT Station)*2	: 1
IP address	: 192.168.3.18
Port No.	: 5001
Communication format	: TCP (fixed)

<Ethernet module>
(The settings other than the following are set to the default)

Network No.	: 1 (virtual)*1
PLC No. (Station)*2	: 2 (virtual)*1
IP address	: 192.168.3.251 (Default)
Port No.	: 5554 (fixed)
Communication format	: TCP (fixed)

*1 These setting items do not exist at the PLC side. However, the virtual values must be set on the GOT side.
☞ Page 300 [Controller Setting] and [Connected Ethernet Controller Setting] of GT Designer3

*2 For the following setting contents, the setting names are different on the PLC side and the GOT side.

Contents of setting	Setting names		
	PLC side	GOT side	
		Controller Setting	Connected Ethernet Controller Setting
Network No.	Network No.	GOT Net No.	Net No.
PC No.	Station	GOT Station	Station

■[Module parameter] of GX Works3

For the connection with FX5-ENET or FX5-ENET/IP, use GX Works3 version 1.075D or later.

- Module parameter of Ethernet module (MELSEC iQ-F Series)

Set [Module parameter] of the port under [Module information].

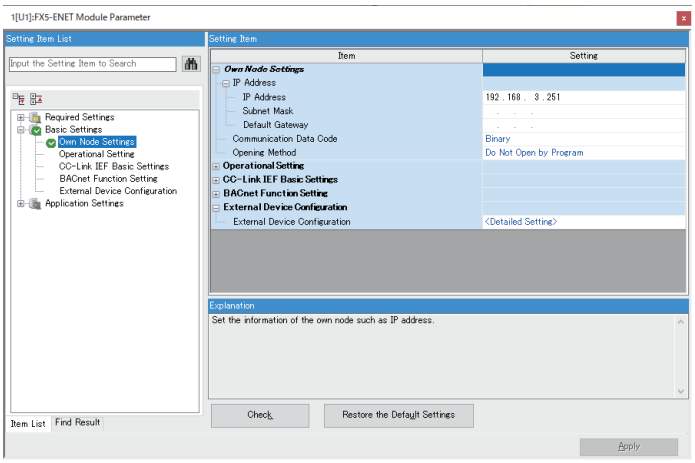

Item	Set value	Setting necessity at GOT connection
IP Address	192.168.3.251	○
Subnet Mask	-	×
Default Gateway	-	×
Communication Data Code	(Use default value)	×
Opening Method	(Use default value)	×
External Device Configuration	☞ • External Device Configuration	○

○ : Necessary △ : As necessary × : Not necessary

• External Device Configuration

The setting is required for all the connected GOTs.

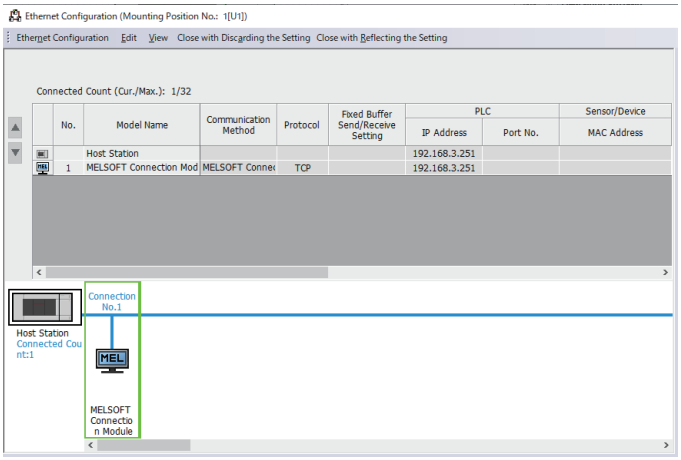

Item	Set value
Communication Method	MELSOFT connection
Protocol	TCP

■[Controller Setting] and [Connected Ethernet Controller Setting] of GT Designer3

For the setting method of [Controller Setting] and [Connected Ethernet Controller Setting] of GT Designer3, refer to the following.

☞ Page 248 Setting communication interface (Controller Setting)

Point

[Connected Ethernet Controller Setting] when Ethernet module (MELSEC iQ-F Series) is connected to a GOT

The setting items for the network No. and station No. do not exist on the PLC side.

Set the network No. and station No. on the GOT side.

Set the network No. that does not exist on the network system and any station No.

• Controller Setting

Item	Set value
GOT Net No.	1
GOT Station	1
GOT Communication Port No.	5001
Retry	3times
Startup Time	3sec
Timeout Time	3sec
Delay Time	0ms

• GOT Ethernet Setting (standard port)

Item	Set value
GOT IP Address	192.168.3.18
Subnet Mask	255.255.255.0
Default Gateway	0.0.0.0
Peripheral Communication Port No.	5015
Transparent Port No.	5014

• Connected Ethernet Controller Setting

Item		Set value
Ethernet setting No.1	Host	*
	Net No.	1 *1
	Station	2 *2
	Unit Type	FX5-ENET
	IP Address	192.168.3.251
	Port No.	5554
	Communication	TCP

*1 Set the same value as GOT Net No.
*2 Set a value different from the GOT station number.

■Confirming the communication state of Ethernet module

• When using the Windows Command Prompt

Execute a Ping command at the Command Prompt of Windows.

1) At normal communication

C:\>Ping 192.168.3.251

Reply from 192.168.3.251:bytes=32 time<1ms TTL=32

2) At abnormal communication

C:\>Ping 192.168.3.251

Request timed out.

• At abnormal communication

At abnormal communication, check the following and execute the Ping command again.

Mounting condition of Ethernet communication unit

Cable connecting condition

Confirmation of switch and network parameter setting

Operation state of PLC CPU (faulty or not)

IP address of the Ethernet module specified by Ping command

Point

Ethernet diagnostics of GX Works3

Ethernet diagnostics of GX Works3 is available to a Ping test from the PLC.

For details of Ethernet diagnostics of GX Works3, refer to the following manual.

📖Manuals of MELSEC iQ-F Series

Connection to MELSEC-Q/L series Built-in Ethernet port CPU

This section describes the settings of the GOT and Built-in Ethernet port CPU in the following case of system configuration.

☞ Page 302 One-on-one connection and [MELSOFT Connection Extended Setting] is the default value in the PLC
☞ Page 306 One-on-one connection and [MELSOFT Connection Extended Setting] is [Use] in the PLC
☞ Page 309 Multi-connection and [MELSOFT Connection Extended Setting] is default value in the PLC
☞ Page 313 Multi-connection and [MELSOFT Connection Extended Setting] is [Use] in the PLC

Point

- Connecting to Built-in Ethernet port CPU

For details of Built-in Ethernet port CPU, refer to the following manual.

📖QnUCPU User's Manual (Communication via Built-in Ethernet Port)

📖MELSEC-L CPU Module User's Manual (Built-In Ethernet Function)

- When connecting to multiple GOTs

When connecting two or more GOTs in the Ethernet network, set each [GOT Station] to the GOT.

☞ Page 368 Precautions

One-on-one connection and [MELSOFT Connection Extended Setting] is the default value in the PLC

■System configuration

For connecting one Built-in Ethernet port QCPU to one GOT, the PLC side settings are not required.

Set [Port No.] to [5006] and [Communication] to [UDP] to communicate with the PLC.

Set [Controller Setting] and [Connected Ethernet Controller Setting] on GT Designer3, and then connect Built-in Ethernet port CPU to the GOT.

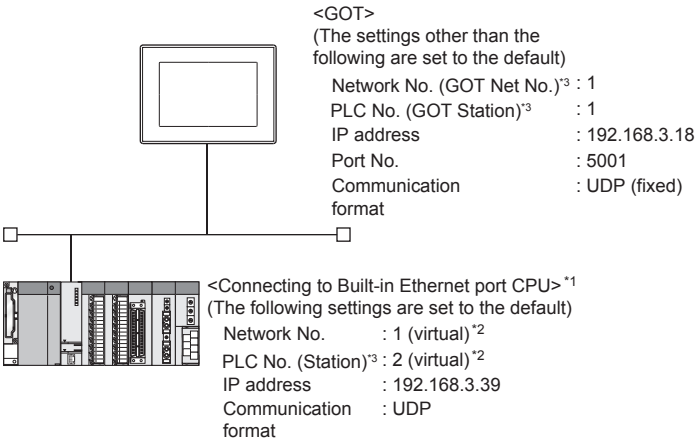

*1 For the settings when using system devices such as a hub, refer to the following.
☞ Page 309 Multi-connection and [MELSOFT Connection Extended Setting] is default value in the PLC
☞ Page 313 Multi-connection and [MELSOFT Connection Extended Setting] is [Use] in the PLC

*2 These setting items do not exist at the PLC side. However, the virtual values must be set on the GOT side.
☞ Page 304 [Controller Setting] and [Connected Ethernet Controller Setting] of GT Designer3

*3 For the following setting contents, the setting names are different on the PLC side and the GOT side.

Contents of setting	Setting names		
	PLC side	GOT side	
		Controller Setting	Connected Ethernet Controller Setting
Network No.	Network No.	GOT Net No.	Net No.
PC No.	Station	GOT Station	Station

■[PLC parameter] of GX Works2

Use the GX Works2 Version1.535H or later.

- Built-in Ethernet

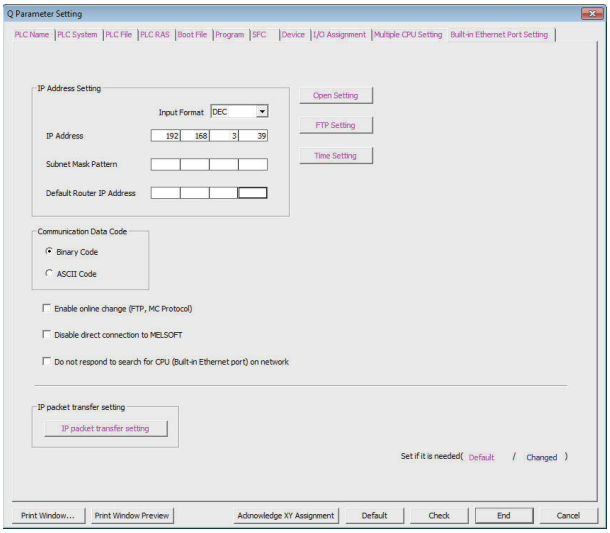

Item	Set value	Setting necessity at GOT connection
IP address	192.168.3.39 (Use default value)	○
Subnet mask pattern	-	×
Default router IP address	-	×
Communication data code	(Use default value)	△
Enable online change (FTP, MC protocol)		△
Disable direct connection to MELSOFT		△
Do not respond to search for CPU (Built-in Ethernet port) on network		△
Open settings	☞ • Open settings	○
FTP settings	(Use default value)	△
Time settings		△
MELSOFT Connection Extended Setting		△

○ : Necessary △ : As necessary × : Not necessary

- Open settings

The setting is required for all the connected GOTs.

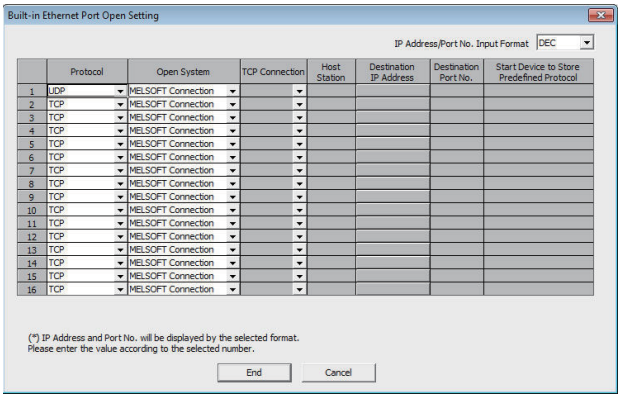

Item	Set value
Protocol	UDP, TCP
Open system	MELSOFT connection

■[Controller Setting] and [Connected Ethernet Controller Setting] of GT Designer3

For the setting method of [Controller Setting] and [Connected Ethernet Controller Setting] of GT Designer3, refer to the following.

☞ Page 248 Setting communication interface (Controller Setting)

Point

[Connected Ethernet Controller Setting] when connecting Built-in Ethernet port QCPU or LCPU and a GOT
The setting items for the network No. and station No. do not exist on the PLC side.
Set the network No. and station No. on the GOT side.
Set the network No. that is not existed on the network system and any station No..

- Controller Setting

Item	Set value
GOT Net No.	1
GOT Station	1
GOT Communication Port No.	5001
Retry	3times
Startup Time	3sec
Timeout Time	3sec
Delay Time	0ms

- GOT Ethernet Setting (standard port)

Item	Set value
GOT IP Address	192.168.3.18
Subnet Mask	255.255.255.0
Default Gateway	0.0.0.0
Peripheral Communication Port No.	5015
Transparent Port No.	5014

- Connected Ethernet Controller Setting

Item		Set value
Ethernet setting No.1	Host	*
	Net No.	1*1
	Station	2*2
	Unit Type	QnUD(P)V/QnUDE(H), LCPU *4
	IP address	192.168.3.39
	Port No.*3	5006
	Communication*3	UDP

*1 Set the same value as GOT Net No.
*2 Set a value different from the GOT station number.
*3 The following [Port No.] and [Communication format] can also be set.
[Port No.]: 5007
[Communication]: TCP
*4 For CR800-Q (Q172DSRCPU), set [Q17nDSR].

■Checking communication state of Connecting to Built-in Ethernet port CPU

- When using the Windows Command Prompt

Execute a Ping command at the Command Prompt of Windows.

1) At normal communication

C:\>Ping 192.168.3.39

Reply from 192.168.3.39:bytes=32 time<1ms TTL=32

2) At abnormal communication

C:\>Ping 192.168.3.39

Request timed out.

- At abnormal communication

At abnormal communication, check the followings and execute the Ping command again.

Cable connecting condition

Confirmation of switch and network parameter setting

Operation state of PLC CPU (faulty or not)

The IP address of Built-in Ethernet port CPU specified in the ping command

Point

Ethernet diagnostics of GX Works2

Ethernet diagnostics of GX Works2 is available to a Ping test from the PLC.

For details of Ethernet diagnostics of GX Works2, refer to the following manual.

📖QCPU User's Manual (Hardware Design, Maintenance and Inspection)

📖MELSEC-L CPU Module User's Manual (Hardware Design, Maintenance and Inspection)

One-on-one connection and [MELSOFT Connection Extended Setting] is [Use] in the PLC

■System configuration

Set [Port No.] to [5001] and [Communication] to [UDP] to communicate with the PLC.

[MELSOFT Connection Extended Setting] is available with QnUDVCPU.

Set [MELSOFT Connection Extended Setting] to [Use], and configure the settings.

Set [Controller Setting] and [Connected Ethernet Controller Setting] on GT Designer3, and then connect Built-in Ethernet port CPU to the GOT.

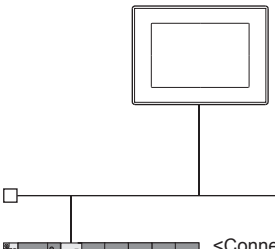

<GOT>
(The settings other than the following are set to the default)
Network No. (GOT Net No.)*2 : 1
PLC No. (GOT Station)*2 : 1
IP address : 192.168.3.18
Port No. : 5001
Communication format : UDP (fixed)

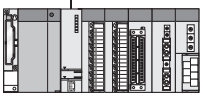

<Connecting to Built-in Ethernet port CPU> *1
(The following settings are set to the default)
Network No. : 1
PLC No. (Station)*2 : 2
IP address : 192.168.3.39
Communication format : UDP

*1 Use the product whose the first five digits of the serial No. for QnUD(P)VCPU is "17052" or later.

*2 For the following setting contents, the setting names are different on the PLC side and the GOT side.

Contents of setting	Setting names		
	PLC side	GOT side	
		Controller Setting	Connected Ethernet Controller Setting
Network No.	Network No.	GOT Net No.	Net No.
PC No.	Station	GOT Station	Station

■[PLC parameter] of GX Works2

Use the GX Works2 Version1.535H or later.

- Built-in Ethernet port

Item	Set value	Setting necessity at GOT connection
IP address	192.168.3.39 (Use default value)	○
Subnet mask pattern	-	×
Default router IP address	-	×
Communication data code	(Use default value)	△
Enable online change (FTP, MC protocol)		△
Disable direct connection to MELSOFT		△
Do not respond to search for CPU (Built-in Ethernet port) on network		△
Open settings	☞ • Open settings.	○
FTP settings	(Use default value)	△
Time settings		△
MELSOFT Connection Extended Setting		○

○ : Necessary △ : As necessary × : Not necessary

- Open settings

The setting is required for all the connected GOTs.

Item	Set value
Protocol	UDP, TCP
Open system	MELSOFT connection

• MELSOFT Connection Extended Setting

Item	Set value	Setting necessity at GOT connection
MELSOFT Connection Extended Setting	Use	○
Network No.	1	○
Station No.	2	○

■[Controller Setting] and [Connected Ethernet Controller Setting] of GT Designer3

For the setting method of [Controller Setting] and [Connected Ethernet Controller Setting] of GT Designer3, refer to the following.

☞ Page 248 Setting communication interface (Controller Setting)

Point

[Connected Ethernet Controller Setting] when Built-in Ethernet port QCPU or LCPU is connected to a GOT
The setting items for the network No. and station No. do not exist on the PLC side.
Set the network No. and station No. on the GOT side.
Set the network No. that is not existed on the network system and any station No..

• Controller Setting

Item	Set value
GOT Net No.	1
GOT Station	1
GOT Communication Port No.	5001
Retry	3 times
Startup Time	3 sec
Timeout Time	3 sec
Delay Time	0ms

• GOT Ethernet Setting (standard port)

Item	Set value
GOT IP Address	192.168.3.18
Subnet Mask	255.255.255.0
Default Gateway	0.0.0.0
Peripheral Communication Port No.	5015
Transparent Port No.	5014

• Connected Ethernet Controller Setting

Item		Set value
Ethernet setting No.1	Host	*
	Net No.	1*1
	Station	2*2
	Unit Type	QnUD(P)V/QnUDE(H) *3
	IP address	192.168.3.39
	Port No.	5001
	Communication	UDP (fixed)

*1 Set the same value as GOT Net No.
*2 Set a value different from the GOT station number.
*3 For CR800-Q (Q172DSRCPU), set [Q17nDSR].

■Checking communication state of Connecting to Built-in Ethernet port CPU

- When using the Windows Command Prompt

Execute a Ping command at the Command Prompt of Windows.

1) At normal communication

C:\>Ping 192.168.3.39

Reply from 192.168.3.39:bytes=32 time<1ms TTL=32

2) At abnormal communication

C:\>Ping 192.168.3.39

Request timed out.

- At abnormal communication

At abnormal communication, check the followings and execute the Ping command again.

Cable connecting condition

Confirmation of switch and network parameter setting

Operation state of PLC CPU (faulty or not)

The IP address of Built-in Ethernet port CPU specified in the ping command

Point

Ethernet diagnostics of GX Works2

Ethernet diagnostics of GX Works2 is available to a Ping test from the PLC.

For details of Ethernet diagnostics of GX Works2, refer to the following manual.

📖QCPU User's Manual (Hardware Design, Maintenance and Inspection)

📖MELSEC-L CPU Module User's Manual (Hardware Design, Maintenance and Inspection)

Multi-connection and [MELSOFT Connection Extended Setting] is default value in the PLC

■System configuration

Set [Port No.] to [5006] and [Communication format] to [UDP] to communicate with the PLC.

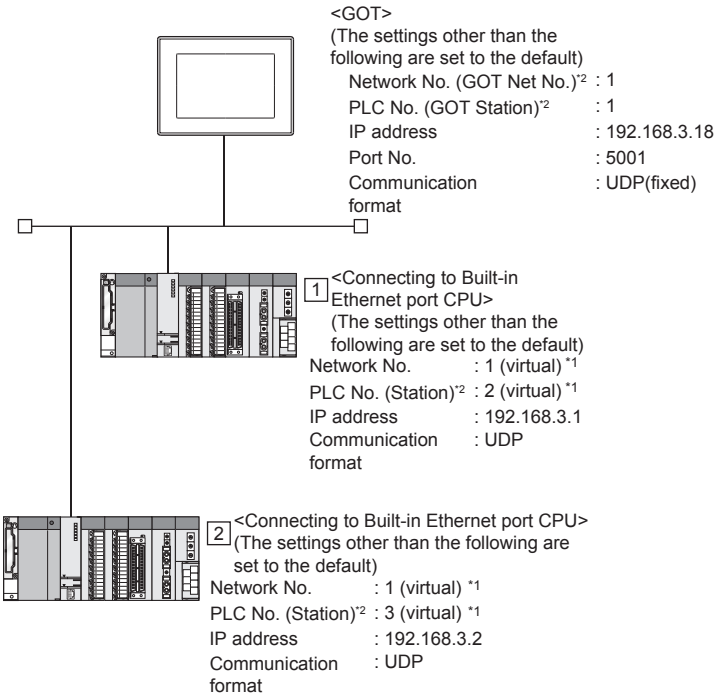

*1 These setting items do not exist at the PLC side. However, the virtual values must be set on the GOT side.
☞ Page 311 [Controller Setting] and [Connected Ethernet Controller Setting] of GT Designer3

*2 For the following setting contents, the setting names are different on the PLC side and the GOT side.

Contents of setting	Setting names		
	PLC side	GOT side	
		Controller Setting	Connected Ethernet Controller Setting
Network No.	Network No.	GOT Net No.	Net No.
PC No.	Station	GOT Station	Station

■[PLC parameter] of GX Works2

- Built-in Ethernet port

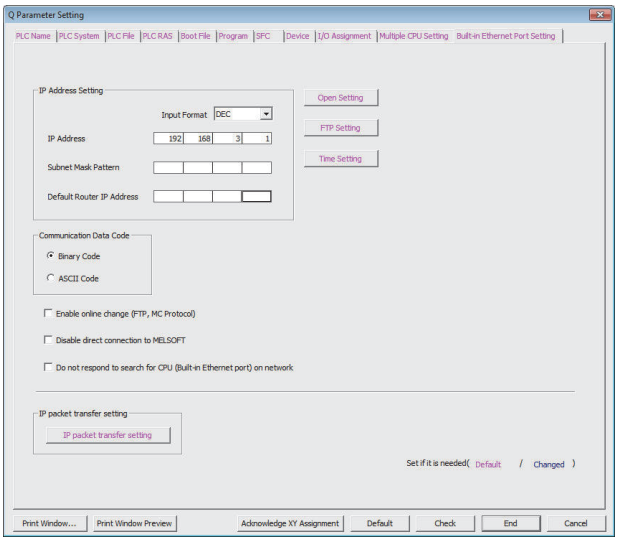

Item	Set value	Setting necessity at GOT connection
IP address	192.168.3.1	○
Subnet mask pattern	-	×
Default router IP address	-	×
Communication data code	(Use default value)	△
Enable online change (FTP, MC protocol)		△
Disable direct connection to MELSOFT		△
Do not respond to search for CPU (Built-in Ethernet port) on network		△
Open settings	☞ • Open settings.	○
FTP settings	(Use default value)	△
Time settings		△

○ : Necessary △ : As necessary × : Not necessary

- Open settings

The setting is required for all the connected GOTs.

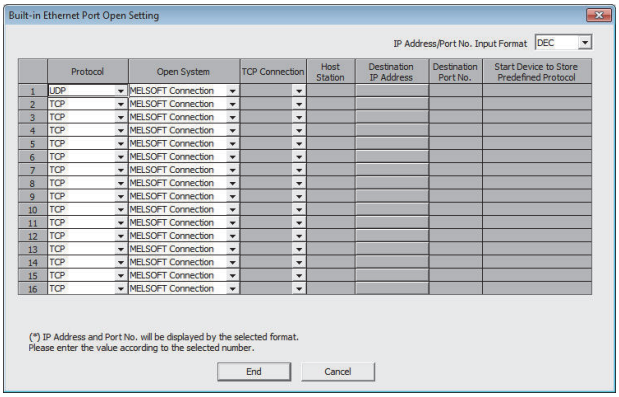

Item	Set value
Protocol	UDP, TCP
Open system	MELSOFT connection

■[Controller Setting] and [Connected Ethernet Controller Setting] of GT Designer3

For the setting method of [Controller Setting] and [Connected Ethernet Controller Setting] of GT Designer3, refer to the following.

☞ Page 248 Setting communication interface (Controller Setting)

Point

[Connected Ethernet Controller Setting] when Built-in Ethernet port CPU is connected to a GOT
The setting items for the network No. and station No. do not exist on the PLC side.
Set the network No. and station No. on the GOT side.
Set the network No. that is not existed on the network system and any station No..

- Controller Setting

Item	Set value
GOT Net No.	1
GOT Station	1
GOT Communication Port No.	5001
Retry	3times
Startup Time	3sec
Timeout Time	3sec
Delay Time	0ms

- GOT Ethernet Setting (standard port)

Item	Set value
GOT IP Address	192.168.3.18
Subnet Mask	255.255.255.0
Default Gateway	0.0.0.0
Peripheral Communication Port No.	5015
Transparent Port No.	5014

- Connected Ethernet Controller Setting

Item		Set value	
		1	2
Ethernet setting No.1	Host	*	-
	Net No.	1*1	1*1
	Station	2*2	3*2
	Unit Type	QnUD(P)V/QnUDE(H), LCPU	QnUD(P)V/QnUDE(H), LCPU
	IP address	192.168.3.1	192.168.3.2
	Port No.*3	5006	5006
	Communication*3	UDP	UDP

*1 Set the same value as GOT Net No.
*2 Set a value different from the GOT station number and PLC numbers of other PLCs on the same network.
*3 The following [Port No.] and [Communication format] can also be set.
[Port No.]: 5007
[Communication]: TCP

■Checking communication state of Connecting to Built-in Ethernet port CPU

- When using the Windows Command Prompt

Execute a Ping command at the Command Prompt of Windows.

1) At normal communication

C:\>Ping 192.168.3.1

Reply from 192.168.3.1:bytes=32 time<1ms TTL=32

2) At abnormal communication

C:\>Ping 192.168.3.1

Request timed out.

- At abnormal communication

At abnormal communication, check the followings and execute the Ping command again.

Cable connecting condition

Confirmation of switch and network parameter setting

Operation state of PLC CPU (faulty or not)

The IP address of Built-in Ethernet port CPU specified in the ping command

Point

Ethernet diagnostics of GX Works2

Ethernet diagnostics of GX Works2 is available to a Ping test from the PLC.

For details of Ethernet diagnostics of GX Works2, refer to the following manual.

📖QCPU User's Manual (Hardware Design, Maintenance and Inspection)

📖MELSEC-L CPU Module User's Manual (Hardware Design, Maintenance and Inspection)

Multi-connection and [MELSOFT Connection Extended Setting] is [Use] in the PLC

■System configuration

Set [Port No.] to [5001] and [Communication] to [UDP] to communicate with the PLC.

[MELSOFT Connection Extended Setting] is available with QnUDVCPU.

Set [MELSOFT Connection Extended Setting] to [Use], and set the items.

Set [Controller Setting] and [Connected Ethernet Controller Setting] on GT Designer3, and then connect Built-in Ethernet port CPU to the GOT.

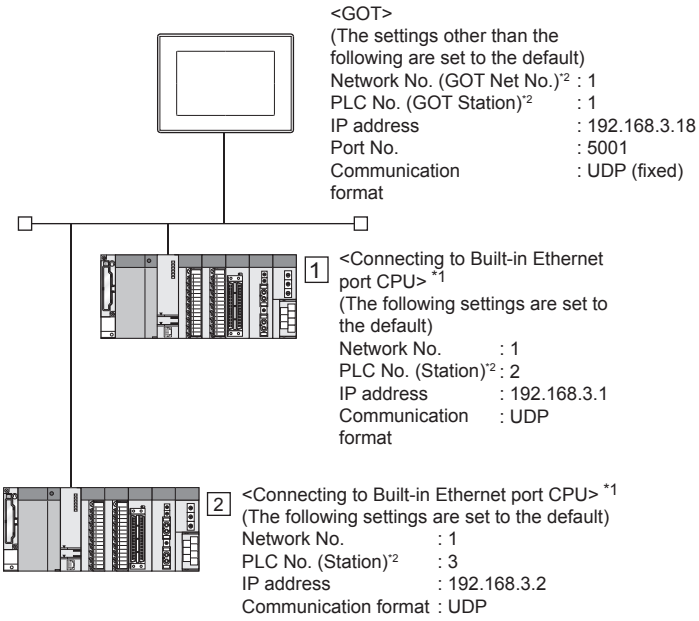

*1 Use the product whose the first five digits of the serial No. for QnUD(P)VCPU is "17052" or later.

*2 For the following setting contents, the setting names are different on the PLC side and the GOT side.

Contents of setting	Setting names		
	PLC side	GOT side	
		Controller Setting	Connected Ethernet Controller Setting
Network No.	Network No.	GOT Net No.	Net No.
PC No.	Station	GOT Station	Station

■[PLC parameter] of GX Works2

Use the GX Works2 Version1.535H or later.

- Built-in Ethernet

Item	Set value	Setting necessity at GOT connection
IP address	192.168.3.1	○
Subnet mask pattern	-	×
Default router IP address	-	×
Communication data code	(Use default value)	△
Enable online change (FTP, MC protocol)		△
Disable direct connection to MELSOFT		△
Do not respond to search for CPU (Built-in Ethernet port) on network		△
Open settings	☞ • Open settings	○
FTP settings	(Use default value)	△
Time settings		△
MELSOFT Connection Extended Setting		○

○ : Necessary △ : As necessary × : Not necessary

- Open settings

The setting is required for all the connected GOTs.

Item	Set value
Protocol	UDP, TCP
Open system	MELSOFT connection

- MELSOFT Connection Extended Setting

Item	Set value	Setting necessity at GOT connection
MELSOFT Connection Extended Setting	Use	○
Network No.	1	○
Station No.	2	○

■[Controller Setting] and [Connected Ethernet Controller Setting] of GT Designer3

For the setting method of [Controller Setting] and [Connected Ethernet Controller Setting] of GT Designer3, refer to the following.

☞ Page 248 Setting communication interface (Controller Setting)

Point

[Connected Ethernet Controller Setting] when Built-in Ethernet port CPU is connected to a GOT
The setting items for the network No. and station No. do not exist on the PLC side.
Set the network No. and station No. on the GOT side.
Set the network No. that is not existed on the network system and any station No..

- Controller Setting

Item	Set value
GOT Net No.	1
GOT Station	1
GOT Communication Port No.	5001
Retry	3 times
Startup Time	3 sec
Timeout Time	3 sec
Delay Time	0 ms

- GOT Ethernet Setting (standard port)

Item	Set value
GOT IP Address	192.168.3.18
Subnet Mask	255.255.255.0
Default Gateway	0.0.0.0
Peripheral Communication Port No.	5015
Transparent Port No.	5014

- Connected Ethernet Controller Setting

Item		Set value	
		1	2
Ethernet setting No.1	Host	*	-
	Net No.	1*1	1*1
	Station	2*2	3*2
	Unit Type	QnUD(P)V/QnUDE(H)	QnUD(P)V/QnUDE(H)
	IP address	192.168.3.1	192.168.3.2
	Port No.	5001	5001
	Communication	UDP (fixed)	UDP (fixed)

*1 Set the same value as GOT Net No.
*2 Set a value different from the GOT station number and PLC numbers of other PLCs on the same network.

■Checking communication state of Connecting to Built-in Ethernet port CPU

- When using the Windows Command Prompt

Execute a Ping command at the Command Prompt of Windows.

1) At normal communication

C:\>Ping 192.168.3.1

Reply from 192.168.3.1:bytes=32 time<1ms TTL=32

2) At abnormal communication

C:\>Ping 192.168.3.1

Request timed out.

- At abnormal communication

At abnormal communication, check the followings and execute the Ping command again.

Cable connecting condition

Confirmation of switch and network parameter setting

Operation state of PLC CPU (faulty or not)

The IP address of Built-in Ethernet port CPU specified in the ping command

Point

Ethernet diagnostics of GX Works2

Ethernet diagnostics of GX Works2 is available to a Ping test from the PLC.

For details of Ethernet diagnostics of GX Works2, refer to the following manual.

📖QCPU User's Manual (Hardware Design, Maintenance and Inspection)

📖MELSEC-L CPU Module User's Manual (Hardware Design, Maintenance and Inspection)

Connection to Ethernet module (Q/L Series)

This section describes the settings of the GOT and Ethernet module (Q Series) in the following case of the system configuration.

Point

- Ethernet module (Q/L Series)

For details of the Ethernet module (Q/L Series), refer to the following manual.

Q Corresponding Ethernet Interface Module User's Manual (Basic)

MELSEC-L Ethernet Interface Module User's Manual (Basic)

- When connecting to multiple GOTs

When connecting two or more GOTs in the Ethernet network, set each [GOT Station] to the GOT.

Page 368 Precautions

System configuration (for Q series)

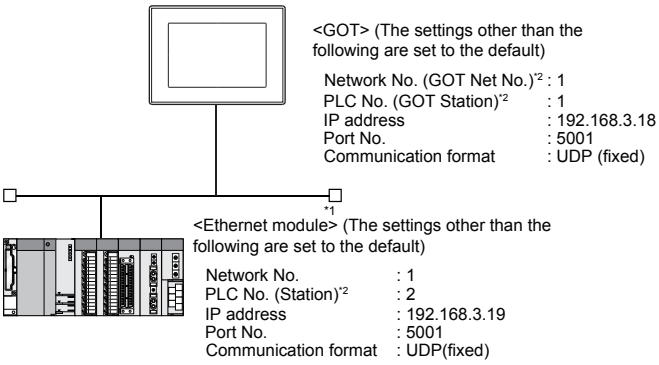

*1 The Ethernet module is mounted on the base unit slot 0.
The Start I/O No. of the Ethernet module is set to "0".

*2 For the following setting contents, the setting names are different on the PLC side and the GOT side.

Contents of setting	Setting names		
	PLC side	GOT side	
		Controller Setting	Connected Ethernet Controller Setting
Network No.	Network No.	GOT Net No.	Net No.
PC No.	Station	GOT Station	Station

Point

When connecting to Q170MCPU

When connected to Q170MCPU, the start I/O No. of the Ethernet module is set to "70".

[Network parameter] of GX Developer

■Network parameter

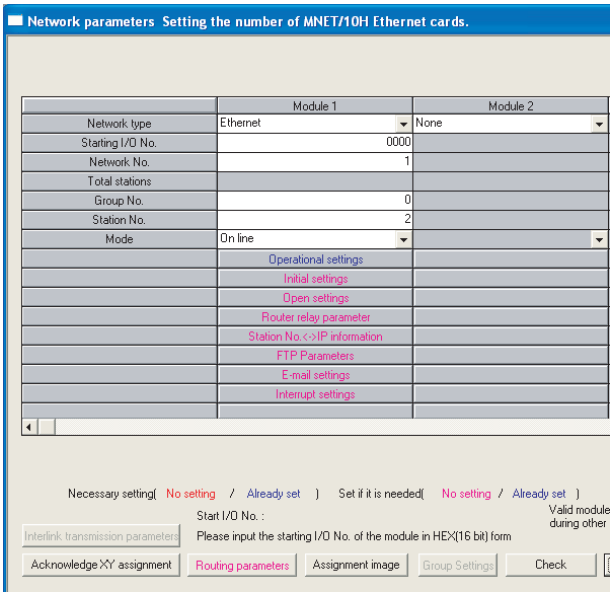

Item	Set value	Setting necessity at GOT connection
Network type	Ethernet (fixed)	○
Starting I/O No.*1	0000H	○
Network No.*2	1	○
Group No.	0 (fixed)	○
Station No.*3	2	○
Mode	Online (fixed)	○
Operation setting	☞ Page 318 Operation setting	○
Initial settings	(Use default value)	△
Open settings		×
Router relay parameter		×
Station No.<->IP information		×
FTP Parameters		×
E-mail settings		×
Interrupt settings		×
Redundant settings*4		△
Routing Parameters	☞ Page 319 Routing parameter setting	△

○ : Necessary △ : As necessary × : Not necessary

*1 When using Q170MCPU or Q170MSCPU(-S1), set the start I/O No. to 0070H.
*2 Specify the same network No. as that of the GOT.
*3 Do not set the same station No. as that of the GOT.
*4 Set when using Ethernet module in a redundant QnPRHCPU system.

■Operation setting

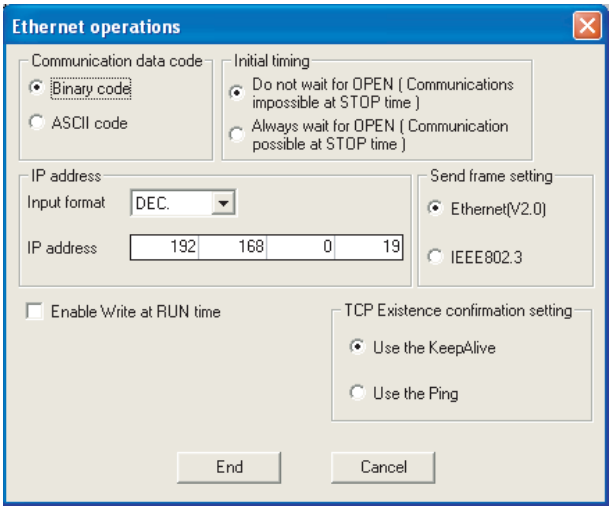

Item	Set value	Setting necessity at GOT connection
Communication data code*1	(Use default value)	×
IP address	192.168.3.19	○
Initial timing*1	(Use default value)	×
Send frame setting		×
Enable Write at RUN time*1		×
TCP Existence confirmation setting		×

○ : Necessary △ : As necessary × : Not necessary

*1 Because port No. 5001 is fixed, these items operate at the following setting without relations to the setting given here.
- Communication date code: [Binary code]
- Initial timing: "Always wait for OPEN" (Communication is applicable while stopping the PLC CPU.)
- Enable Write at RUN time: [Enable Write at RUN time] (Writing Data is applicable while running the PLC CPU.)

Point

When changing the network parameter
After writing the network parameter to the PLC CPU, operate the PLC CPU ether turning OFF and then ON or resetting.

■Routing parameter setting

Up to 64 [Transfer Network No.]s can be set.

However, the same transfer network number cannot be set twice or more (multiple times).

Therefore, the one that can access to other station from the request source host GOT is 64 kinds of [Transfer Network No.]s.

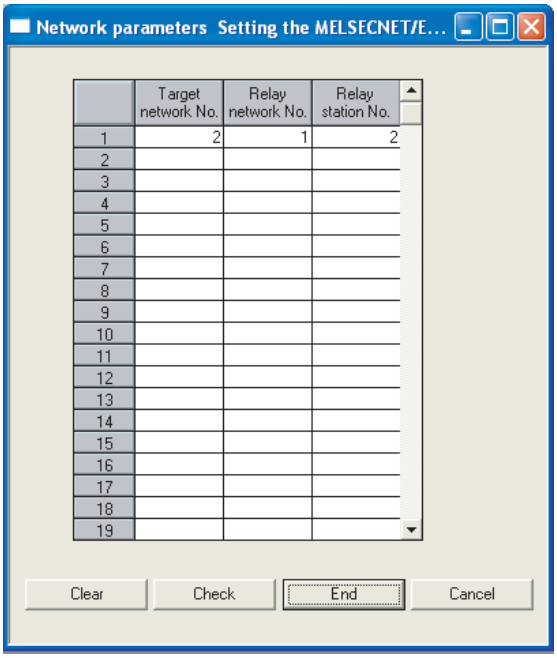

Item	Range
Target network No.	1 to 239
Relay network No.	1 to239
Relay station No.	0 to 64

Point

Routing parameter setting of request source

Routing parameter setting is also necessary for the request source GOT.

For the setting, refer to the following.

☞ Page 260 Routing parameter setting

■Communication confirmation

The INIT. LED on the Ethernet module turns on when the module is ready to communicate.

For confirming the communication state, refer to the following.

☞ Page 321 Confirming the communication state of Ethernet module

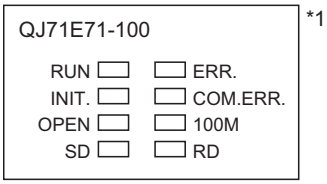

*1 The LEDs layout of QJ71E71-100.

[Controller Setting] and [Connected Ethernet Controller Setting] of GT Designer3

For the setting method of [Controller Setting] and [Connected Ethernet Controller Setting] of GT Designer3, refer to the following.

☞ Page 248 Setting communication interface (Controller Setting)

■Controller Setting

Item	Set value
GOT Net No.	1
GOT Station	1
GOT Communication Port No.	5002
Retry	3times
Startup Time	3sec
Timeout Time	3sec
Delay Time	0ms

■GOT Ethernet Setting (standard port)

Item	Set value
GOT IP Address	192.168.3.18
Subnet Mask	255.255.255.0
Default Gateway	0.0.0.0
Peripheral Communication Port No.	5015
Transparent Port No.	5014

■Connected Ethernet Controller Setting

Item		Set value
Ethernet setting No.1	Host	*
	Net No.	1
	Station	2
	Unit Type	QJ71E71
	IP address	192.168.3.19
	Port No.*1	5001
	Communication*1	UDP

*1 The following [Port No.] and [Communication format] can also be set.
[Port No.]: 5002
[Communication]: TCP

Confirming the communication state of Ethernet module

■When using the Windows Command Prompt

Execute a Ping command at the Command Prompt of Windows.

- At normal communication

C:\>Ping 192.168.3.19

Reply from 192.168.3.19:bytes=32 time<1ms TTL=32

- At abnormal communication

C:\>Ping 192.168.3.19

Request timed out.

■At abnormal communication

At abnormal communication, check the followings and execute the Ping command again.

- Mounting condition of Ethernet communication unit
- Cable connecting condition
- Confirmation of switch and network parameter setting
- Operation state of PLC CPU (faulty or not)
- IP address of GOT specified by Ping command

Point

Ethernet diagnostics of GX Developer

Ethernet diagnostics of GX Developer is available to a Ping test from the PLC.

For details of Ethernet diagnostics of GX Developer, refer to the following manual.

User's manual of the Ethernet module

Connection to C Controller module (Q Series)

This section describes the settings of the GOT and C Controller module (Q Series) in the following case of the system configuration.

Point

- C Controller module (Q Series)

For details of C Controller module (Q Series), refer to the following manual.

C Controller Module User's Manual (Hardware Design, Function Explanation)

- When connecting to multiple GOTs

When connecting two or more GOTs in the Ethernet network, set each [GOT Station] to the GOT.

☞ Page 368 Precautions

System configuration

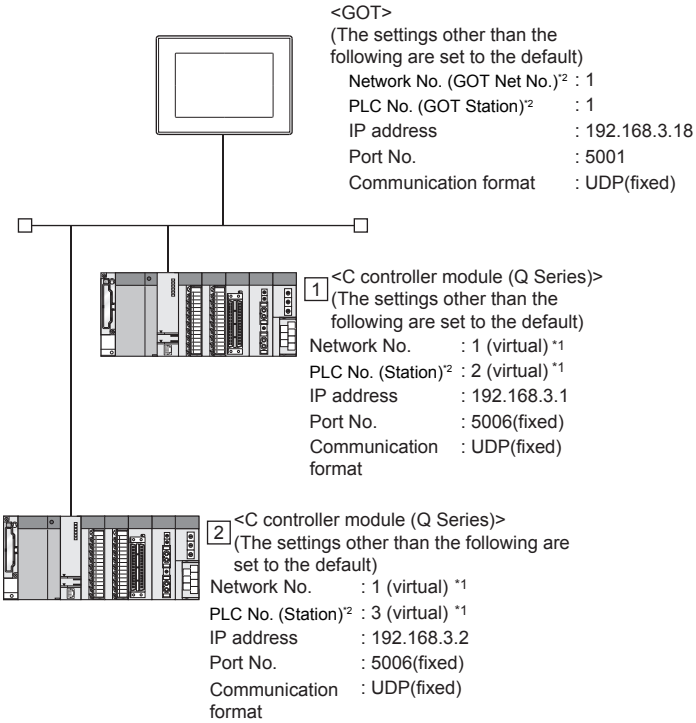

*1 These setting items do not exist at the PLC side. However, the virtual values must be set on the GOT side.

☞ Page 325 [Controller Setting] and [Connected Ethernet Controller Setting] of GT Designer3

*2 For the following setting contents, the setting names are different on the PLC side and the GOT side.

Contents of setting	Setting names		
	PLC side	GOT side	
		Controller Setting	Connected Ethernet Controller Setting
Network No.	Network No.	GOT Net No.	Net No.
PC No.	Station	GOT Station	Station

Utility setting for C Controller module (Q Series)

■Q12DCCPU-V

Use SW3PVC-CCPU-E Ver.3.05F or later for the C Controller (Q Series) setting utility.

- Connection settings

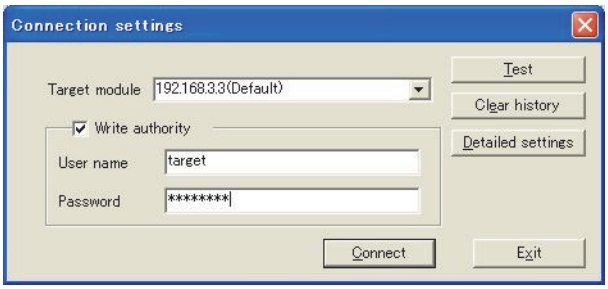

Item	Set value	Setting necessity at GOT connection
Target module*1	192.168.3.3 (Default)	○
Write authority	Mark the checkbox	○
User name*2	target	○
Password*2	password	○
Detailed settings	-	△

○ : Necessary △ : As necessary × : Not necessary

*1 If the IP address of the C Controller module (Q Series) has been changed, input the changed IP address or host name.

*2 If the account of the C Controller module (Q Series) has been changed, input the changed user name and password.

- Online operation

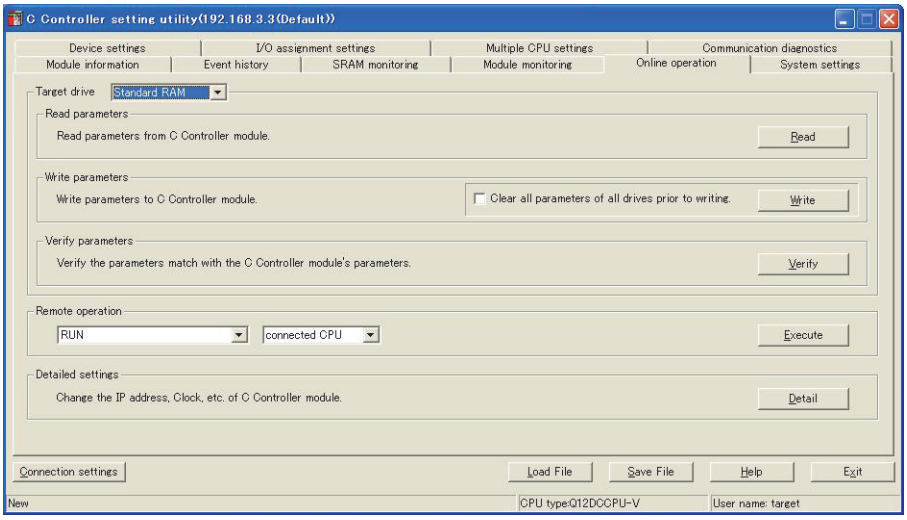

Item	Set value	Setting necessity at GOT connection
Detailed settings	☞ • Detail settings	○

○ : Necessary △ : As necessary × : Not necessary

• Detail settings

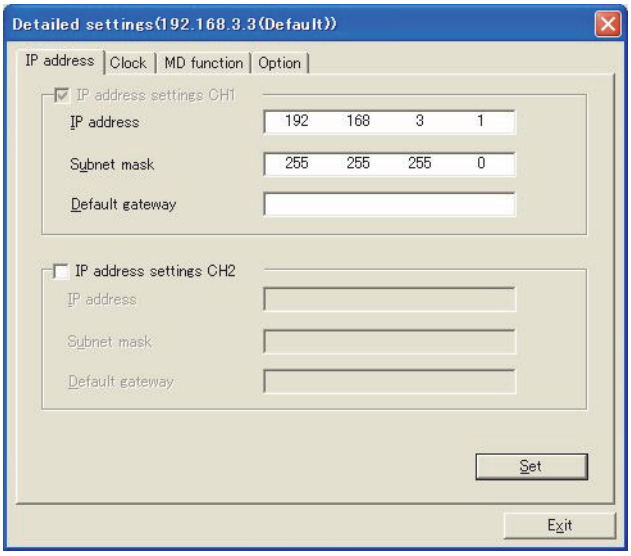

Item	Set value	Setting necessity at GOT connection
IP address	192.168.3.1	○
Subnet mask	255.255.255.0	○
Default gateway	-	×
IP address settings CH2	-	×

○ : Necessary △ : As necessary × : Not necessary

• System settings

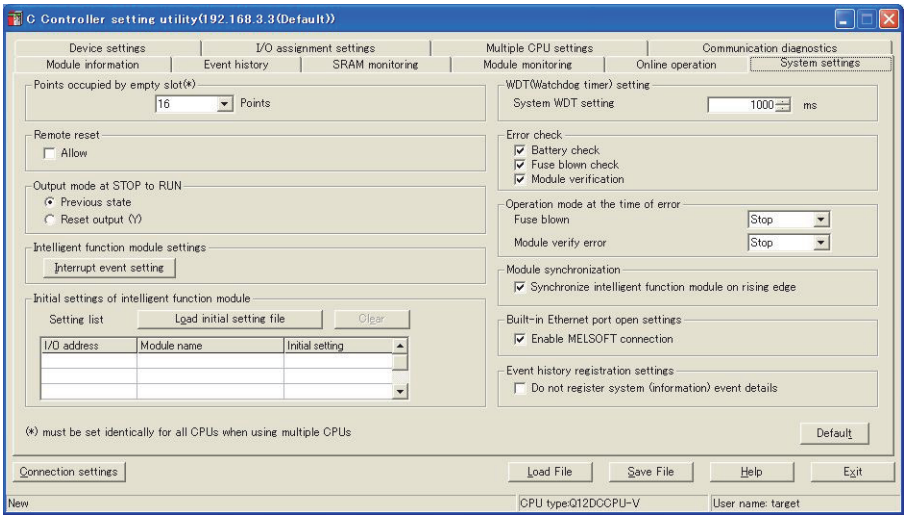

Item	Set value	Setting necessity at GOT connection
Points occupied by empty slot	(Use default value)	△
Remote reset		△
Output mode at STOP to RUN		△
Intelligent function module settings		△
Initial settings of intelligent function module		△
WDT (Watchdog timer) setting		△
Error check		△
Operation mode at the time of error		△
Module synchronization		△
Built-in Ethernet port open settings	Mark the checkbox	○
Event history registration settings	(Use default value)	△

○ : Necessary △ : As necessary × : Not necessary

■Q24DHCCPU-V/VG/LS

Use SW4PVC-CCPU-E for the C Controller (Q Series) setting utility.

- Connection settings

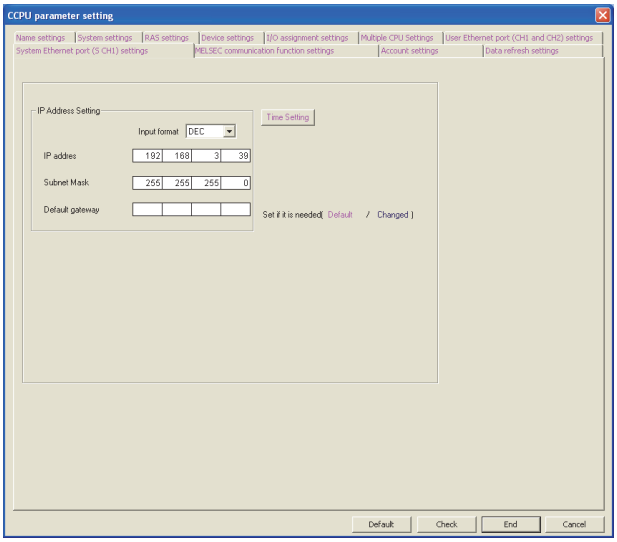

Item	Set value	Setting necessity at GOT connection
IP Address*1	192.168.3.39 (Default)	○
Subnet Mask	255.255.255.0 (Default)	○
Default Gateway	-	×

○ : Necessary △ : As necessary × : Not necessary

*1 If the IP address of the C Controller module (Q Series) has been changed, input the changed IP address.

[Controller Setting] and [Connected Ethernet Controller Setting] of GT Designer3

For the setting method of [Controller Setting] and [Connected Ethernet Controller Setting] of GT Designer3, refer to the following.

☞ Page 248 Setting communication interface (Controller Setting)

Point

[Connected Ethernet Controller Setting] when connecting C Controller module (Q Series) and a GOT

The setting items for the network No. and station No. do not exist on the PLC side.

Set the network No. and station No. on the GOT side.

Set the network No. that is not existed on the network system and any station No..

■Controller Setting

Item	Set value
GOT Net No.	1
GOT Station	1
GOT Communication Port No.	5001
Retry	3times
Startup Time	3sec
Timeout Time	3sec
Delay Time	0ms

■GOT Ethernet Setting (standard port)

Item	Set value
GOT IP Address	192.168.3.18
Subnet Mask	255.255.255.0
Default Gateway	0.0.0.0
Peripheral Communication Port No.	5015
Transparent Port No.	5014

■Connected Ethernet Controller Setting

Item		Set value	
		1	2
Ethernet setting No.1	Host	*	-
	Net No.	1*1	1*1
	Station	2*2	3*2
	Unit Type	QnD(H)CCPU	QnD(H)CCPU
	IP address	192.168.3.1	192.168.3.2
	Port No.*3	5006	5006
	Communication*3	UDP	UDP

*1 Set the same value as GOT Net No.
*2 Set a value different from the GOT station number and PLC numbers of other PLCs on the same network.
*3 The following [Port No.] and [Communication format] can also be set.
[Port No.]: 5007
[Communication]: TCP

Checking communication state of C Controller module (Q Series)

■When using the Windows Command Prompt

Execute a Ping command at the Command Prompt of Windows.

- At normal communication

C:\>Ping 192.168.3.1

Reply from 192.168.3.1:bytes=32 time<1ms TTL=32

- At abnormal communication

C:\>Ping 192.168.3.1

Request timed out.

■At abnormal communication

At abnormal communication, check the followings and execute the Ping command again.

- Cable connecting condition
- Confirmation of switch and network parameter setting
- Operation state of PLC CPU (faulty or not)
- The IP address of C Controller module (Q Series) specified in the ping command

Connection to Ethernet module (QnA Series)

This section describes the settings of the GOT and Ethernet module (QnA Series) in the following case of the system configuration.

Point

- Ethernet module (QnA Series)

For details of the Ethernet module (QnA Series), refer to the following manual.

For QnA Ethernet Interface Module User's Manual

- When connecting to multiple GOTs

When connecting two or more GOTs in the Ethernet network, set each [GOT Station] to the GOT.

Page 368 Precautions

System configuration

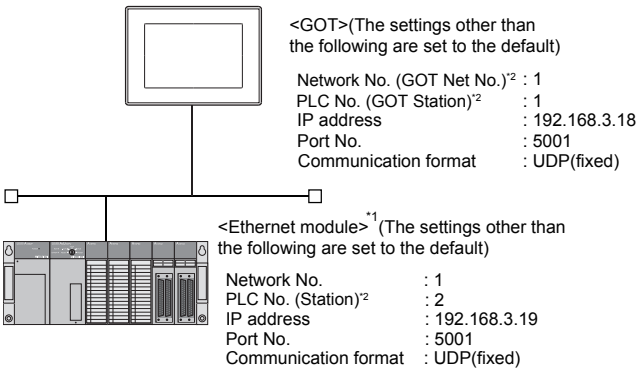

*1 The Ethernet module is mounted on the base unit slot 0.
The Start I/O No. of the Ethernet module is set to "0".

*2 For the following setting contents, the setting names are different on the PLC side and the GOT side.

Contents of setting	Setting names		
	PLC side	GOT side	
		Controller Setting	Connected Ethernet Controller Setting
Network No.	Network No.	GOT Net No.	Net No.
PC No.	Station	GOT Station	Station

Switch settings of Ethernet module

Set the operation mode setting switch and exchange condition setting switch.

AJ71QE71N3-T, AJ71QE71N-B5, AJ71QE71N-B2, AJ71QE71N-T, AJ71QE71N-B5T, AJ71QE71, AJ71QE71-B5

A1SJ71QE71N3-T, A1SJ71QE71N-B5, A1SJ71QE71N-B2, A1SJ71QE71N-T, A1SJ71QE71N-B5T, A1SJ71QE71-B5, A1SJ71QE71-B2

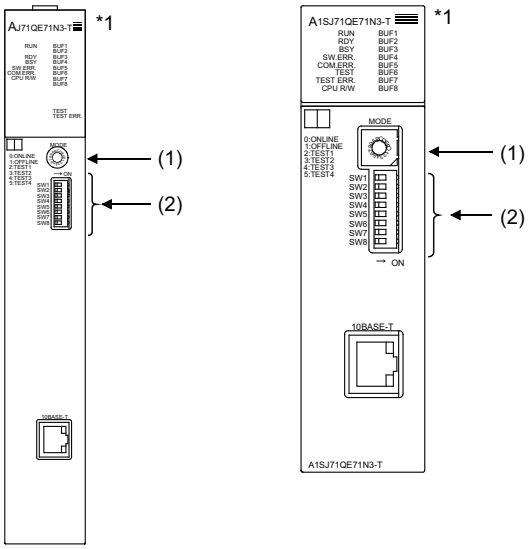

*1 The figure of AJ71QE71N3-T and A1SJ71QE71N3-T.

■Operation mode setting switch

Operation mode setting switch	Description	Set value	Setting necessity at GOT connection
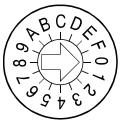	Online	0 (fixed)	○

○ : Necessary △ : As necessary × : Not necessary

■Exchange condition setting switch

Exchange condition setting switch	Setting switch	Description	Set value	Setting necessity at GOT connection
	SW1	Selection of line processing at TCP timeout error	OFF	△
	SW2	Data code setting*1	OFF (fixed)	×
	SW3	Self start mode setting*2	ON	○
	SW4	(Must not to be used)	OFF (fixed)	×
	SW5			
	SW6			
	SW7	CPU exchange timing setting*1	OFF (fixed)	×
	SW8	Initial timing setting	OFF	△

○ : Necessary △ : As necessary × : Not necessary

*1 Because port No. 5001 is fixed, these items operate at the following setting without relations to the setting given here.
- Data code setting: [Binary code]
- Enable Write at RUN time: [Enable Write at RUN time] (Writing Data is applicable while running the PLC CPU.)

*2 When SW3 is ON, the initial processing is executed regardless of the initial request signal (Y19).
In addition, communication is applicable while stopping the PLC CPU.
For the initial processing by using the initial request signal (Y19), refer to the following manual.
For QnA Ethernet Interface Module User's Manual

Point

When the switch setting has been changed
Turn the PLC CPU OFF then ON again, or reset the PLC CPU.

[Network parameter] of GX Developer

■Network parameter

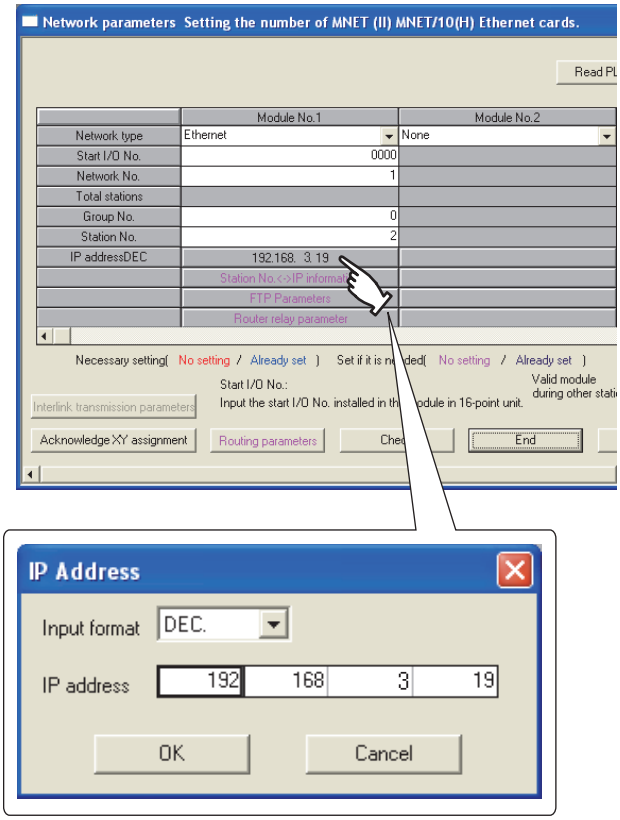

Item	Set value	Setting necessity at GOT connection
Network type	Ethernet (fixed)	○
Start I/O No.	0000H	○
Network No.*1	1	○
Group No.	0 (fixed)	○
Station No.*2	2	○
IP address	192.168.0.19	○
Station No.<->IP information	(Use default value)	×
FTP Parameters		×
Router relay parameter		×
Routing parameters	☞ Page 331 Routing parameter setting	△

○ : Necessary △ : As necessary × : Not necessary

*1 Specify the same network No. as that of the GOT.

*2 Do not set the same station No. as that of the GOT.

Point

When changing the network parameter

After writing the network parameter to the PLC CPU, operate the PLC CPU ether turning OFF and then ON or resetting.

■Routing parameter setting

Up to 64 [Transfer Network No.]s can be set.

However, the same transfer network number cannot be set twice or more (multiple times).

Therefore, the one that can access to other station from the request source host GOT is 64 kinds of [Transfer Network No.]s.

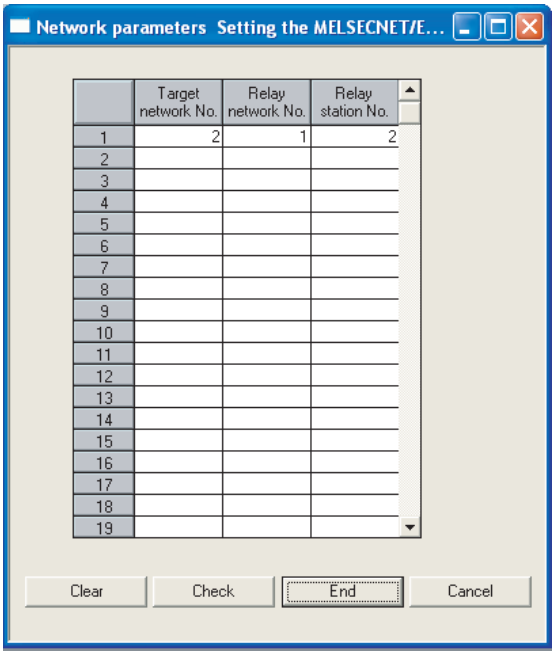

Item	Range
Target network No.	1 to 239
Relay network No.	1 to 239
Relay station No.	0 to 64

Point

Routing parameter setting of request source

Routing parameter setting is also necessary for the request source GOT.

For the setting, refer to the following.

☞ Page 260 Routing parameter setting

■Communication confirmation

The RDY LED on the Ethernet module turn on when the module is ready to communicate.

For confirming the communication state, refer to the following.

☞ Page 321 Confirming the communication state of Ethernet module

AJ71QE71N3-T, AJ71QE71N-B5, AJ71QE71N-B2, AJ71QE71N-T, AJ71QE71N-B5T, AJ71QE71, AJ71QE71-B5

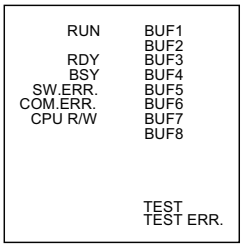

A1SJ71QE71N3-T, A1SJ71QE71N-B5, A1SJ71QE71N-B2, A1SJ71QE71N-T, A1SJ71QE71N-B5T,A1SJ71QE71-B5, A1SJ71QE71-B2

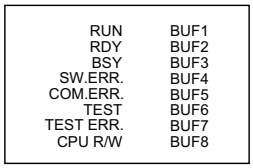

[Controller Setting] and [Connected Ethernet Controller Setting] of GT Designer3

For the setting method of [Controller Setting] and [Connected Ethernet Controller Setting] of GT Designer3, refer to the following.

☞ Page 248 Setting communication interface (Controller Setting)

■Controller Setting

GOT Net No.	Set value
GOT Net No.	1
GOT Station	1
GOT Communication Port No.	5002
Retry	3times
Startup Time	3sec
Timeout Time	3sec
Delay Time	0ms

■GOT Ethernet Setting(standard port)

Item	Set value
GOT IP Address	192.168.3.18
Subnet Mask	255.255.255.0
Default Gateway	0.0.0.0
Peripheral Communication Port No.	5015
Transparent Port No.	5014

■Connected Ethernet Controller Setting

Item		Set value
Ethernet setting No.1	Host	*
	Net No.	1
	Station	2
	Unit Type	AJ71QE71
	IP address	192.168.0.19
	Port No.*1	5001
	Communication*1	UDP

*1 The following [Port No.] and [Communication format] can also be set.
[Port No.]: 5002
[Communication]: TCP

Connection to Ethernet module (A Series)

This section describes the settings of the GOT and Ethernet module (A Series) in the following case of the system configuration.

Point

- Ethernet module (A Series)

For details of the Ethernet module (A Series), refer to the following manual.

For A Ethernet Interface Module User's Manual

- When connecting to multiple GOTs

When connecting two or more GOTs in the Ethernet network, set each [GOT Station] to the GOT.

Page 368 Precautions

System configuration

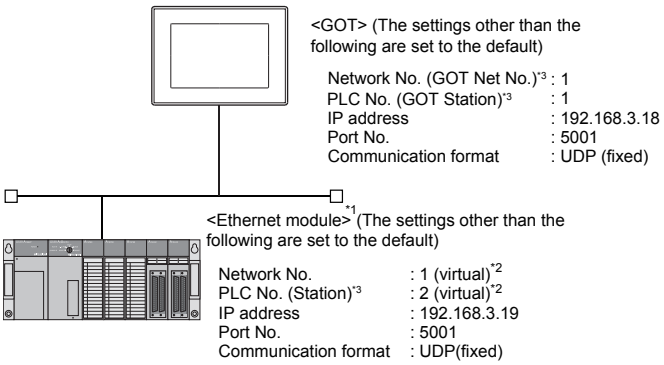

*1 The Ethernet module is mounted on the base unit slot 0.
The Start I/O No. of the Ethernet module is set to "0".

*2 These setting items do not exist at the PLC side. However, the virtual values must be set on the GOT side.
Page 338 [Controller Setting] and [Connected Ethernet Controller Setting] of GT Designer3

*3 For the following setting contents, the setting names are different on the PLC side and the GOT side.

Contents of setting	Setting names		
	PLC side	GOT side	
		Controller Setting	Connected Ethernet Controller Setting
Network No.	Network No.	GOT Net No.	Net No.
PC No.	Station	GOT Station	Station

Switch settings of Ethernet module

Set the operation mode setting switch and exchange condition setting switch.

AJ71E71N3-T, AJ71E71N-B5, AJ71E71N-B2, AJ71E71N-T, AJ71E71N-B5T, AJ71E71-S3

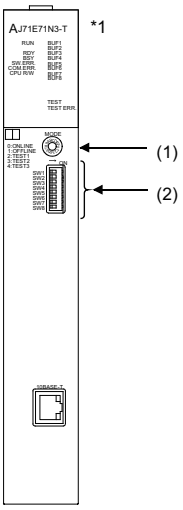

A1SJ71E71N3-T, A1SJ71E71N-B5, A1SJ71E71N-B2, A1SJ71E71N-T, A1SJ71E71N-B5T, A1SJ71E71-B5-S3, A1SJ71E71-B2-S3

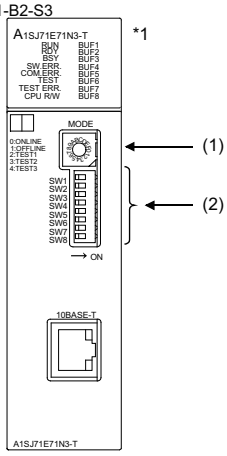

*1 The figure of AJ71E71N3-T and A1SJ71E71N3-T.

■Operation mode setting switch

Operation mode setting switch	Description	Set value	Setting necessity at GOT connection
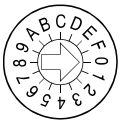	Online	0 (fixed)	○

○ : Necessary △ : As necessary × : Not necessary

■Exchange condition setting switch*1

Exchange condition setting switch	Setting switch	Description	Set value	Setting necessity at GOT connection
	SW1	Selection of line processing at TCP timeout error	OFF	△
	SW2	Data code setting (binary code)	OFF (fixed)	○
	SW3	(Must not to be used)	OFF (fixed)	×
	SW4			
	SW5			
	SW6			
	SW7	CPU exchange timing setting (Enable write at RUN time)	ON (fixed)	○
	SW8	Initial timing setting	OFF	△

○ : Necessary △ : As necessary × : Not necessary

*1 The exchange condition setting switches of A1SJ71E71-B5-S3 and A1SJ71E71-B2-S3 are specified as the below.

Exchange condition setting switch	Setting switch	Description	Set value	Setting necessity at GOT connection
	SW1	Selection of line processing at TCP timeout error	OFF	△
	SW2	Data code setting (binary code)	OFF (fixed)	○
	SW3	CPU exchange timing setting (Enable write at RUN time)	ON (fixed)	○
	SW4	Initial timing setting	OFF	△

○ : Necessary △ : As necessary × : Not necessary

Point

When the switch setting has been changed

Turn the PLC CPU OFF then ON again, or reset the PLC CPU.

Sequence program

The sequence program for initial processing and communication line opening processing are required.

■Programming condition

This program performs the initial processing of the Ethernet module and the opening processing of connection No. 1 when the stopping PLC CPU starts running.

- I/O signal of Ethernet module

📖For A Ethernet Interface Module User's Manual

- Device used by user

Device	Application
M102	COM.ERR turned off command
D100	IP address of Ethernet module
D110	Application setting
D111	Port No. of Ethernet module
D112 to D113	IP address of GOT
D114	Port No. of GOT
D200	Initial fault code

- Buffer memory settings used in the present example

Buffer memory address Dec (Hex)	Item	Set value
0 to 1 (0 to 1H)	IP address of Ethernet module	C0A80313H (192.168.3.19)
16 (10H)	Application setting*1	100H
24 (18H)	Port No. of Ethernet module	5001
25 to 26 (19 to 1AH)	IP address of GOT	FFFFFFFFH
27 (1BH)	Port No. of GOT	FFFFH (fixed)
80 (50H)	Initial fault code	—

*1 The details of the application setting are shown below.
Settings 1), 2) and 3) can be changed by the user.
4), 5) and 6) are fixed.

b15	b14	b13	b12	b11	b10	b9	b8	b7	b6	b5	b4	b3	b2	b1	b0
0	0	0	0	0	0	0	1	0	0	0	0	0	0	0	0
6)						5)	4)	3)						2)	1)

1) Fixed buffer application
0: For sending; no exchange
1: For receiving
2) Existence check
0: No
1: Yes
3) Pairing open
0: No
1: Yes
4) Communication format (Set to "1" (UDP/IP).)
0:TCP/IP
1:UDP/IP
5) Fixed buffer exchange (Set to "0" (With procedure).)
0: With procedure
1: Without procedure
6) Open method (Set to "00" (Active, UDP/IP).
00: Active, UDP/IP
10:Unpassive
11:Fullpassive

■Example of sequence program

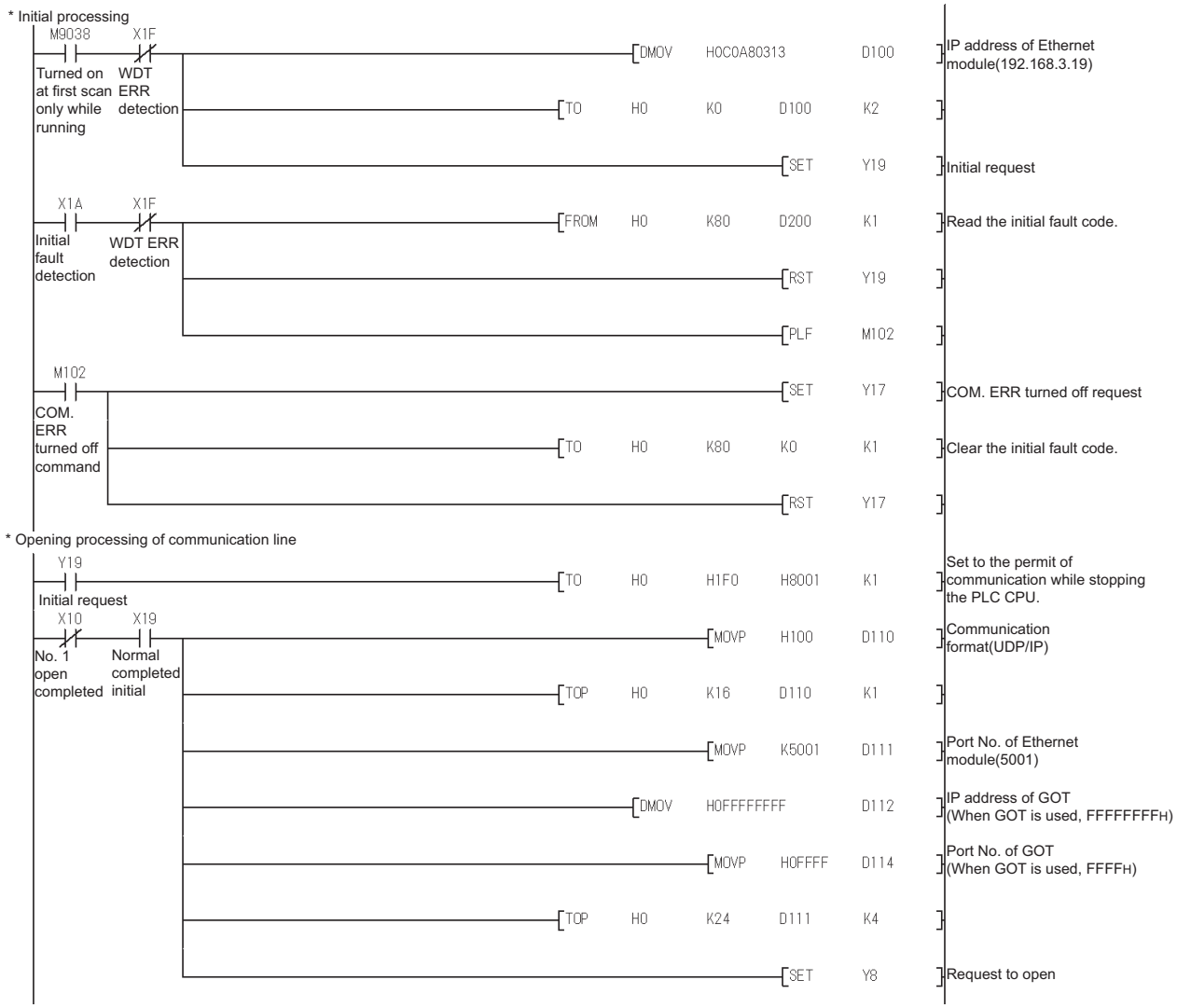

Point

When changing the sequence program

After writing the sequence program to the PLC CPU, operate the PLC CPU ether turning OFF and then ON or resetting.

■Communication confirmation

The RDY LED on the Ethernet module turn on when the module is ready to communicate.

For confirming the communication state, refer to the following.

☞ Page 321 Confirming the communication state of Ethernet module

The BUF1 LED turns on when the opening processing of the connection No. 1 is completed in normal at executing of the sequence program example described at (2).

AJ71E71N3-T, AJ71E71N-B5, AJ71E71N-B2, AJ71E71N-T, AJ71E71N-B5T, AJ71E71-S3

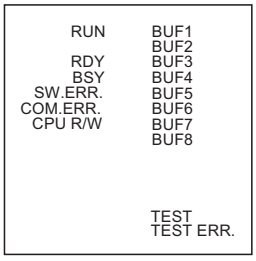

A1SJ71E71N3-T, A1SJ71E71N-B5, A1SJ71E71N-B2, A1SJ71E71N-T, A1SJ71E71N-B5T, A1SJ71E71-B5-S3, A1SJ71E71-B2-S3

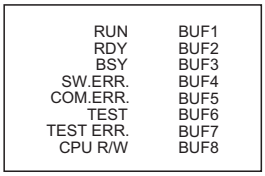

[Controller Setting] and [Connected Ethernet Controller Setting] of GT Designer3

For the setting method of [Controller Setting] and [Connected Ethernet Controller Setting] of GT Designer3, refer to the following.

☞ Page 248 Setting communication interface (Controller Setting)

■Controller Setting

Item	Set value
GOT Net No.	1
GOT Station	1
GOT Communication Port No.	5002
Retry	3times
Startup Time	3sec
Timeout Time	3sec
Delay Time	0ms

■GOT Ethernet Setting (standard port)

Item	Set value
GOT IP Address	192.168.3.18
Subnet Mask	255.255.255.0
Default Gateway	0.0.0.0
Peripheral Communication Port No.	5015
Transparent Port No.	5014

■Connected Ethernet Controller Setting

Item		Set value
Ethernet setting No.1	Host	*
	Net No.	1
	Station	2
	Unit Type	AJ71E71
	IP address	192.168.3.19
	Port No.	5001
	Communication	UDP (fixed)

Connection to Ethernet module (FX Series)

This section describes the settings of the GOT and Ethernet module (FX Series) in the following case of the system configuration.

Point

• Ethernet module (FX Series)

For details of the Ethernet module (FX Series), refer to the following manual.

📖FX3U-ENET-L User's manual

📖FX3U-ENET User's manual

📖FX3U-ENET-ADP User's manual

• When connecting to multiple GOTs

When connecting two or more GOTs in the Ethernet network, set each [GOT Station] to the GOT.

☞ Page 368 Precautions

System configuration

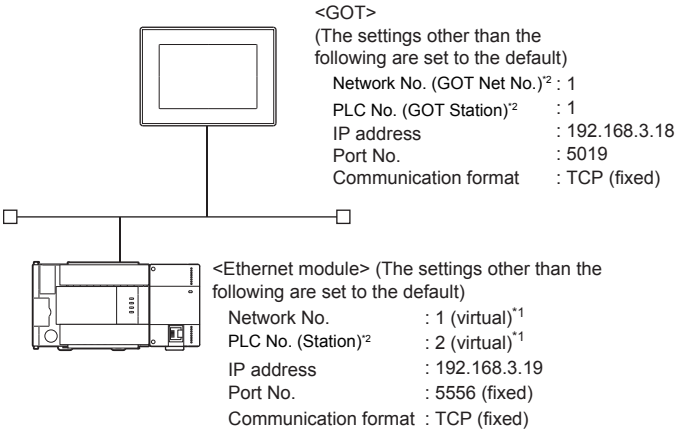

*1 These setting items do not exist at the PLC side. However, the virtual values must be set on the GOT side.
☞ Page 344 [Controller Setting] and [Connected Ethernet Controller Setting] of GT Designer3

*2 For the following setting contents, the setting names are different on the PLC side and the GOT side.

Contents of setting	Setting names		
	PLC side	GOT side	
		Controller Setting	Connected Ethernet Controller Setting
Network No.	Network No.	GOT Net No.	Net No.
PC No.	Station	GOT Station	Station

Ethernet parameter settings of FX Configurator-EN-L and FX Configurator-EN

■Ethernet settings

Set the Ethernet parameter using FX Configurator-EN-L or FX Configurator-EN.

To use FX Configurator-EN-L, GX-Developer Ver.8.88S or later is required.

To use FX Configurator-EN, GX-Developer Ver.8.25B or later is required.

For the details on the engineering tools, refer to the following manuals.

📖FX Configurator-EN-L Operation Manual

📖FX Configurator-EN Operation manual

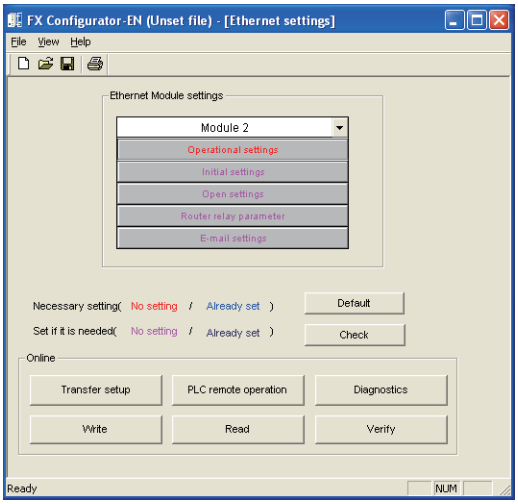

FX Configurator-EN-L

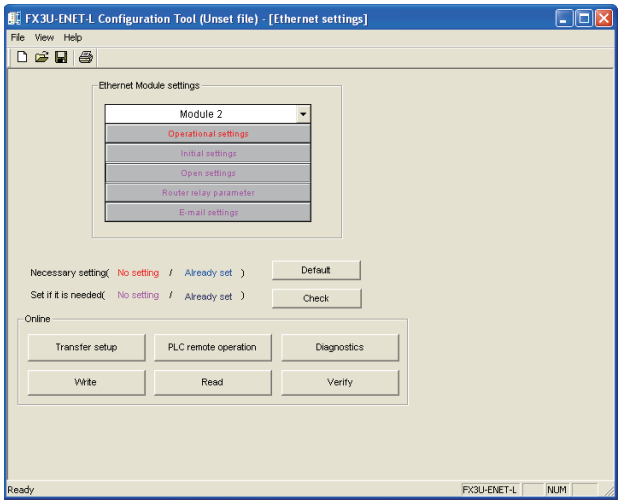

FX Configurator-EN

Item	Setting	Setting (with GOT connected)
Module	Module 0*1	○
Operational settings	☞ Page 341 Operational settings	○
Initial settings	(Use default value.)	×
Open settings	☞ Page 342 Open settings	○
Router relay parameter	(Use default value.)	×
E-mail settings		×

○ : Required △ : Set if necessary × : Not required

*1 Set the number of the Ethernet module.

■Operational settings

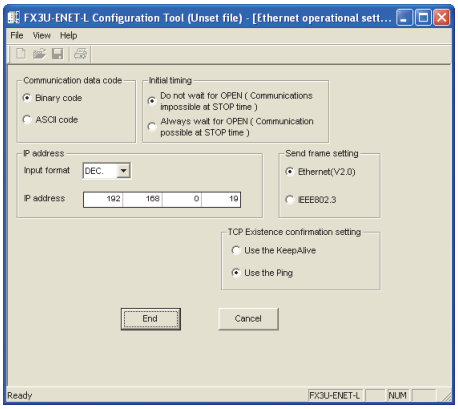

Item	Setting	Setting (with GOT connected)
Communication date code*1	(Use default value.)	×
IP address	192.168.3.19	○
Initial timing*1	(Use default value.)	×
Send frame setting		×
TCP Existence confirmation setting		×

○ : Required △ : Set if necessary × : Not required

*1 Because the port No. 5551 is fixed, the GOT operates as follows, regardless of the setting for the item.
- Communication date code: [Binary code]
- Initial timing: [Always wait for OPEN] (Communications are enabled while the programmable controller CPU stops.)

*2 The default value of IP address is 192.168.1.254. Set the IP address corresponding to the system configuration.

Point

When changing Ethernet parameter

After writing the Ethernet parameter to the programmable controller CPU, turn off and then on, or reset the programmable controller CPU.

■Open settings

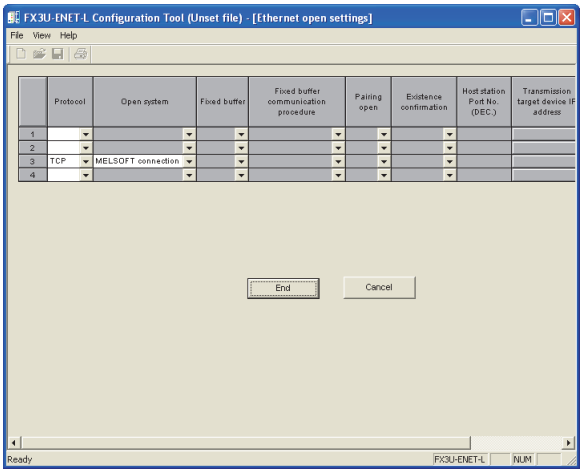

Item	Setting	Setting (with GOT connected)
Protocol	TCP	○
Open system	MELSOFT connection	○
Fixed buffer	(Use default value.)	×
Fixed buffer communication procedure		×
Pairing open		×
Existence confirmation		×
Host station Port No. (DEC.)		×
Transmission target device IP address		×
Transmission target device Port No. (DEC.)		×

○ : Required △ : Set if necessary × : Not required

Point

When connecting to multiple GOTs and peripheral devices

The number of protocols equivalent to that of the GOTs and devices must be set.

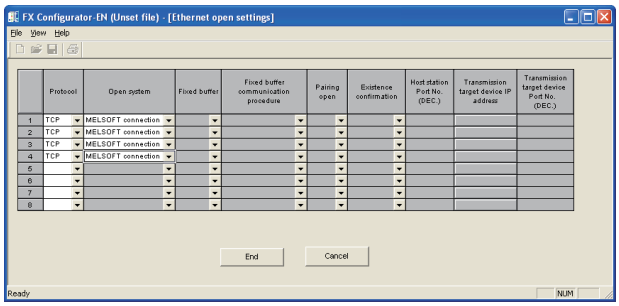

Ethernet parameter settings of FX3U-ENET-ADP

■Ethernet settings

Set the Ethernet parameter at [FX Parameter] on GX Works2.

To set FX3U-ENET-ADP, GX Works2 Ver.1.90U or later is required.

For details on the setting of FX3U-ENET-ADP, refer to the following manual.

📖FX3U-ENET-ADP User's Manual

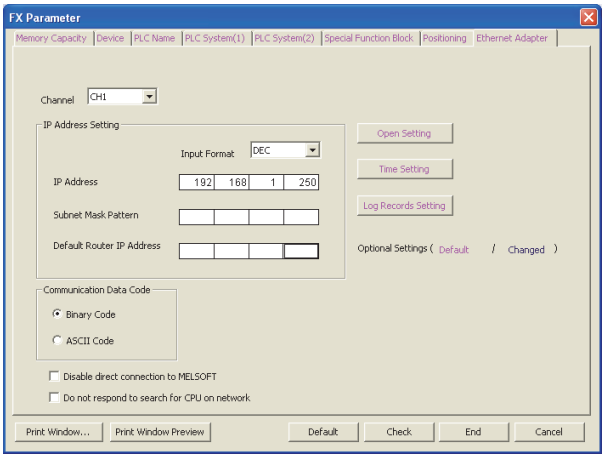

Item	Setting	Setting (with GOT connected)
Channel	CH1 or CH2*1	×
IP Address	192.168.3.19*2	○
Open Settings	☞ Page 343 Open settings	○
Communication Data Code	(Use default value.)	×
Disable direct connection to MELSOFT		×
Do not respond to search for CPU on network		×

○ : Required △ : Set if necessary × : Not required

*1 Set a channel according to the installation position of FX3U-ENET-ADP on the CPU body.

*2 The default value of IP address is 192.168.1.250. Set the IP address corresponding to the system configuration.

Point

When changing Ethernet parameter

After writing Ethernet parameters to the PLC CPU, turn the PLC CPU OFF then back ON again.

■Open settings

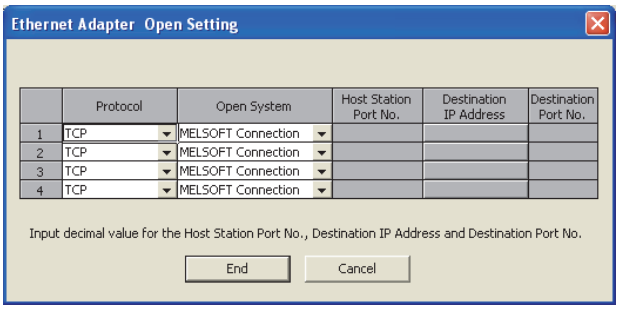

Item	Setting	Setting (with GOT connected)
Protocol	TCP	○
Open System	MELSOFT connection	○

Point

When connecting to multiple GOTs and peripheral devices

The number of protocols equivalent to that of the GOTs and devices must be set.

[Controller Setting] and [Connected Ethernet Controller Setting] of GT Designer3

For the setting method of [Controller Setting] and [Connected Ethernet Controller Setting] of GT Designer3, refer to the following.

☞ Page 248 Setting communication interface (Controller Setting)

■Controller Setting

Item	Set value
GOT Net No.	1
GOT Station	1
GOT Communication Port No.	5019
Retry	3times
Startup Time	3sec
Timeout Time	3sec
Delay Time	0ms

■GOT Ethernet Setting (standard port)

Item	Set value
GOT IP Address	192.168.3.18
Subnet Mask	255.255.255.0
Default Gateway	0.0.0.0
Peripheral Communication Port No.	5015
Transparent Port No.	5014

■Connected Ethernet Controller Setting

Item		Set value
Ethernet setting No.1	Host	*
	Net No.	1
	Station	2
	Unit Type	FX (fixed)
	IP address	192.168.3.19*1
	Port No.	<When using FX3U-ENET-L> 5551 <When using FX3U-ENET-ADP> 5556
	Communication	TCP (fixed)

*1 Set the value according to the IP address of the connected PLC.

Confirming the communication state of Ethernet module

■When using the Windows Command Prompt

Execute a Ping command at the Command Prompt of Windows.

- At normal communication

C:\>Ping 192.168.3.19

Reply from 192.168.3.19:bytes=32 time<1ms TTL=32

- At abnormal communication

C:\>Ping 192.168.3.19

Request timed out.

■At abnormal communication

At abnormal communication, check the followings and execute the Ping command again.

- Mounting condition of Ethernet communication unit
- Cable connecting condition
- Confirmation of switch and network parameter setting
- Operation state of PLC CPU (faulty or not)
- IP address of GOT specified by Ping command

Point

Ethernet diagnostics of FX Configurator-EN-L or FX Configurator-EN is available to a Ping test from the PLC.
For details of Ethernet diagnostics of the engineering tools, refer to the following manuals.
📖FX Configurator-EN-L Operation manual
📖FX Configurator-EN Operation manual

Connection to Built-in Ethernet port FXCPU (FX3GE)

This section describes the settings of the GOT and Ethernet module (FX Series) in the following case of the system configuration.

Point

• FX3GE

For details of FX3GE, refer to the following manual.

FX3GE SERIES PROGRAMMABLE CONTROLLERS HARDWARE MANUAL

• When connecting to multiple GOTs

When connecting two or more GOTs in the Ethernet network, set each [GOT Station] to the GOT.

☞ Page 368 Precautions

System configuration

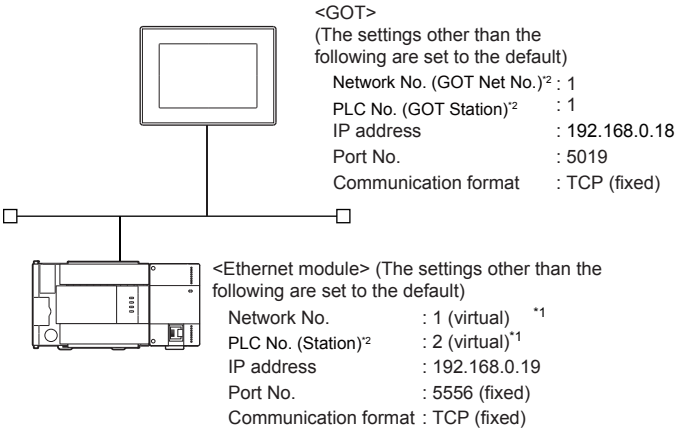

*1 These setting items do not exist at the PLC side. However, the virtual values must be set on the GOT side.
☞ Page 348 [Controller Setting] and [Connected Ethernet Controller Setting] of GT Designer3

*2 For the following setting contents, the setting names are different on the PLC side and the GOT side.

Contents of setting	Setting names		
	PLC side	GOT side	
		Controller Setting	Connected Ethernet Controller Setting
Network No.	Network No.	GOT Net No.	Net No.
PC No.	Station	GOT Station	Station

Ethernet parameter settings of FX3GE

■Ethernet settings

Set the Ethernet parameter at [FX Parameter] on GX Works2.

To set FX3GE, GX Works2 Ver.1.91V or later is required.

For details on the setting of FX3GE, refer to the following manual.

📖FX3GE SERIES PROGRAMMABLE CONTROLLERS HARDWARE MANUAL

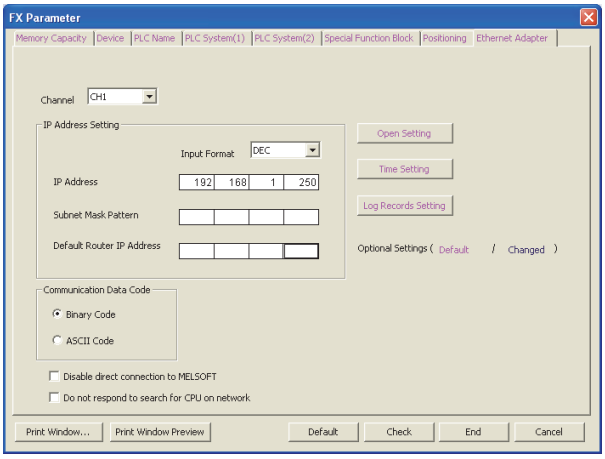

Item	Set value	Setting (with GOT connected)
Channel	CH1	×
IP Address	192.168.0.19*1	○
Open Settings	☞ Page 347 Open settings	○
Communication Data Code	(Use default value.)	×
Disable direct connection to MELSOFT		×
Do not respond to search for CPU on network		×

○ : Required △ : Set if necessary × : Not required

*1 The default value of IP address is 192.168.1.250. Set the IP address corresponding to the system configuration.

Point

When changing Ethernet parameter

After writing Ethernet parameters to the PLC CPU, turn the PLC CPU OFF then back ON again.

■Open settings

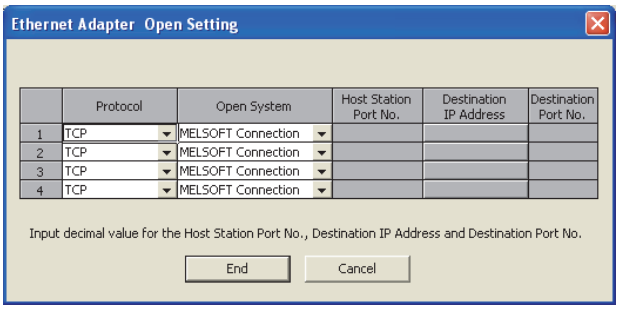

Item	Set value	Setting (with GOT connected)
Protocol	TCP	○
Open System	MELSOFT connection	○

Point

When connecting to multiple GOTs and peripheral devices

The number of protocols equivalent to that of the GOTs and devices must be set.

[Controller Setting] and [Connected Ethernet Controller Setting] of GT Designer3

For the setting method of [Controller Setting] and [Connected Ethernet Controller Setting] of GT Designer3, refer to the following.

☞ Page 248 Setting communication interface (Controller Setting)

■Controller Setting

Item	Set value
GOT Net No.	1
GOT Station	1
GOT Communication Port No.	5019
Retry	3times
Startup Time	3sec
Timeout Time	3sec
Delay Time	0ms

■GOT Ethernet Setting (standard port)

Item	Set value
GOT IP Address	192.168.3.18
Subnet Mask	255.255.255.0
Default Gateway	0.0.0.0
Peripheral Communication Port No.	5015
Transparent Port No.	5014

■Connected Ethernet Controller Setting

Item		Set value
Ethernet setting No.1	Host	*
	Net No.	1
	Station	2
	Unit Type	FX (fixed)
	IP address	192.168.0.19*1
	Port No.	5556*2
	Communication	TCP (fixed)

*1 Set the value according to the IP address of the connected PLC.

*2 Set the value according to the Port No. of the connected PLC.
For details, refer to the following.
☞ Page 255 Connected Ethernet controller setting

Confirming the communication state of Ethernet module

■When using the Windows Command Prompt

Execute a Ping command at the Command Prompt of Windows.

- At normal communication

C:\>Ping 192.168.0.19

Reply from 192.168.0.19:bytes=32 time<1ms TTL=32

- At abnormal communication

C:\>Ping 192.168.0.19

Request timed out.

■At abnormal communication

At abnormal communication, check the followings and execute the Ping command again.

- Mounting condition of Ethernet communication unit
- Cable connecting condition
- Confirmation of switch and network parameter setting
- Operation state of PLC CPU (faulty or not)
- IP address of GOT specified by Ping command

Connection to Display I/F (CNC C70)

This section describes the settings of the GOT and Display I/F (CNC C70) in the following case of the system configuration.

Point

- Display I/F (CNC C70)

For details of the Display I/F (CNC C70), refer to the following manual.

C70 Series SET UP MANUAL

- When connecting to multiple GOTs

When connecting two or more GOTs in the Ethernet network, set each [GOT Station] to the GOT.

Page 368 Precautions

System configuration

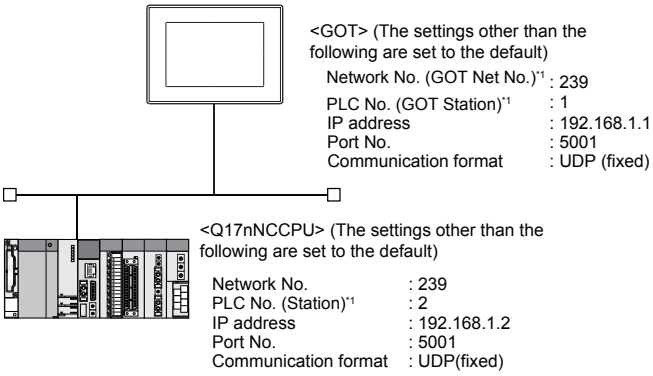

*1 For the following setting contents, the setting names are different on the PLC side and the GOT side.

Contents of setting	Setting names		
	PLC side	GOT side	
		Controller Setting	Connected Ethernet Controller Setting
Network No.	Network No.	GOT Net No.	Net No.
PC No.	Station	GOT Station	Station

IP address settings of CNC C70

■Remote monitor tool

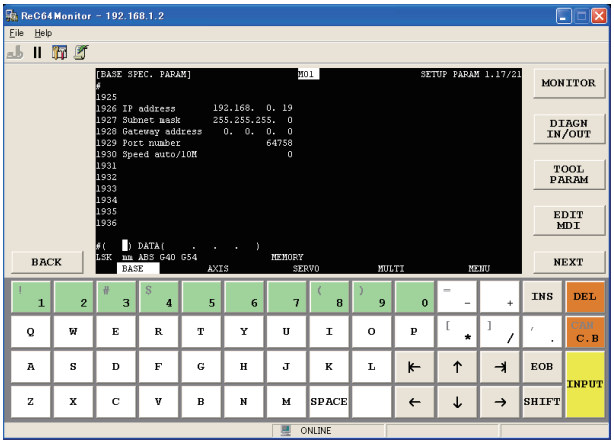

Item	Set value	Setting necessity at GOT connection
IP address	192.168.1.2	○
Subnet mask	255.255.255.0	○
Gateway address	0.0.0.0	○
Port number	64758 (fixed)	○
Speed auto/10M	0 (fixed)	○

○ : Necessary △ : As necessary × : Not necessary

■CNC monitor

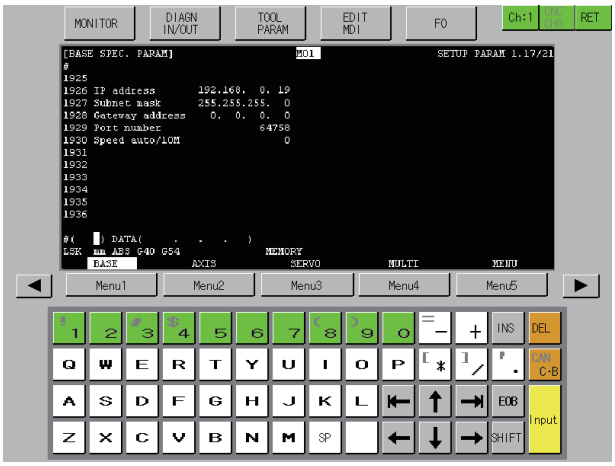

Item	Set value	Setting necessity at GOT connection
IP address	192.168.1.2	○
Subnet mask	255.255.255.0	○
Gateway address	0.0.0.0	○
Port number	64758 (fixed)	○
Speed auto/10M	0 (fixed)	○

○ : Necessary △ : As necessary × : Not necessary

■Communication check

The CNC C70 can communicate with the GOT when INIT.LED of the CNC C70 is lit.

For confirming the communication state, refer to the following.

☞ Page 351 Checking communication state of CNC C70

[Controller Setting] and [Connected Ethernet Controller Setting] of GT Designer3

For the setting method of [Controller Setting] and [Connected Ethernet Controller Setting] of GT Designer3, refer to the following.

☞ Page 248 Setting communication interface (Controller Setting)

■Controller Setting

Item	Set value
GOT Net No.	259
GOT Station	1
GOT Communication Port No.	5001
Retry	3times
Startup Time	3sec
Timeout Time	3sec
Delay Time	0ms

■GOT Ethernet Setting (standard port)

Item	Set value
GOT IP Address	192.168.1.1
Subnet Mask	255.255.255.0
Default Gateway	0.0.0.0
Peripheral Communication Port No.	5015
Transparent Port No.	5014

■Connected Ethernet Controller Setting

Item		Set value
Ethernet setting No.1	Host	*
	Net No.	239
	Station	2
	Unit Type	Q17nNC
	IP address	192.168.1.2
	Port No.*1	5001
	Communication*1	UDP

*1 The following [Port No.] and [Communication format] can also be set.
[Port No.]: 5002
[Communication]: TCP

Checking communication state of CNC C70

■When using the Windows Command Prompt

Execute a Ping command at the Command Prompt of Windows.

- At normal communication

C:\>Ping 192.168.1.2

Reply from 192.168.1.2:bytes=32 time<1ms TTL=32

- At abnormal communication

C:\>Ping 192.168.1.2

Request timed out.

■At abnormal communication

At abnormal communication, check the followings and execute the Ping command again.

- Mounting condition of CNC C70
- Cable connecting condition
- Switch settings and network parameter settings
- Operation state of PLC CPU (faulty or not)
- IP address of the CNC C70 specified for the Ping command

Connection to NZ2GF-ETB

This section describes the settings of the GOT, the CC-Link IE Field Network Ethernet adapter module (NZ2GF-ETB), and the PLC in the following system configuration.

Point

- CC-Link IE Field Network Ethernet adapter module (NZ2GF-ETB)

For details on the CC-Link IE Field Network Ethernet adapter module (NZ2GF-ETB), refer to the following.

CC-Link IE Field Network Ethernet Adapter Module User's Manual

- When connecting to multiple GOTs

When connecting two or more GOTs in the Ethernet network, set each [GOT Station] to the GOT.

Page 368 Precautions

System configuration

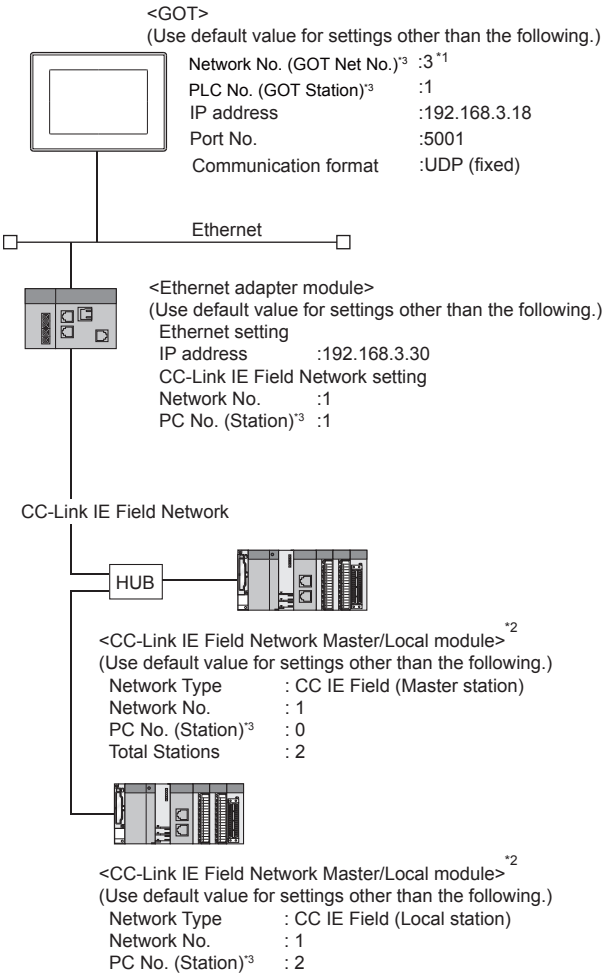

*1 Set the GOT network No. according to the third octet (network No.) of the Ethernet adapter module IP address.

*2 The CC-Link IE Field Network Master/Local module is mounted on slot 0 of the base unit.
The start I/O No. of the CC-Link IE Field Network Master/Local module is set at [0].

*3 For the following setting contents, the setting names are different on the PLC side and the GOT side.

Contents of setting	Setting names		
	PLC side	GOT side	
		Controller Setting	Connected Ethernet Controller Setting
Network No.	Network No.	GOT Net No.	Net No.
PC No.	Station	GOT Station	Station

GX Works2 network parameter Ethernet/CC IE/MELSECNET

For details of the setting contents of PLC side, refer to the following manual.

📖MELSEC-Q CC-Link IE Field Network Master/Local Module User's Manual

■Network Type, Network No., Total Stations setting

Example: Master station setting

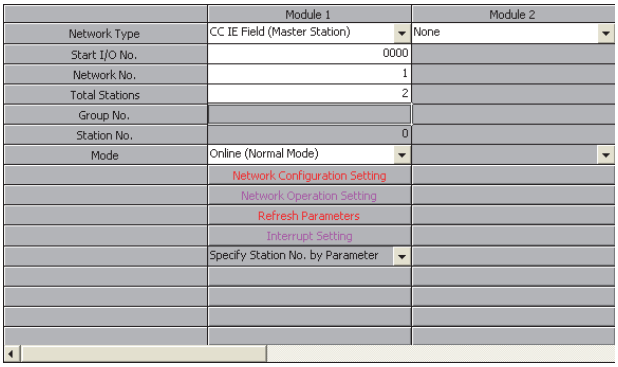

Item	Set value	
	Master station	Local station
Network type	CC IE Field (Master station)	CC IE Field (Local station)
Network No.	1	1
Total Stations	2	-
Station No.	0 (fixed)	2

■Routing parameter setting

Set the followings as necessary.

Up to 64 [Transfer Network No.]s can be set.

However, the same transfer network number cannot be set twice or more (multiple times).

Therefore, the one that can access to other station from the request source host GOT is 64 kinds of [Transfer Network No.]s.

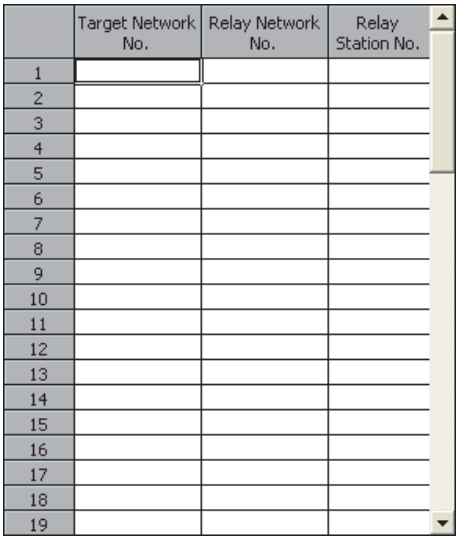

Item	Range
Transfer Network No.	1 to 239
Relay Network No.	1 to 239
Relay Station No.	0 to 64

Ethernet Adapter Module setting

Set the parameter with the Ethernet adapter module setting tool.

For details of the setting method, refer to the following manual.

📖CC-Link IE Field Network Ethernet Adapter Module User's Manual

■CC-Link IE Field Network setting

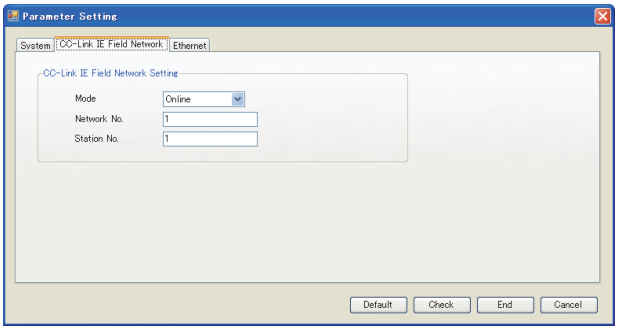

Item	Set value
Network No.	1*1
Station No.	1*2

*1 Set the same value as the network No. set on the PLC side.

*2 Set a value other than the network No. set on the PLC side.

■Ethernet setting

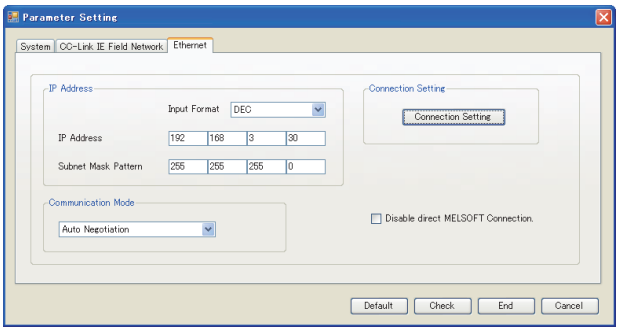

Item	Set value
IP address	192.168.3.30*1

*1 Set the IP address within the following range.

192.168.3.30

Set the fourth octet within the range from 1 to 64.

Set the third octet within the range from 1 to 239.

[Controller Setting] and [Connected Ethernet Controller Setting] of GT Designer3

For the setting method of [Controller Setting] and [Connected Ethernet Controller Setting] of GT Designer3, refer to the following.

☞ Page 248 Setting communication interface (Controller Setting)

■Controller Setting

Item	Set value
GOT Net No.	3*1
GOT Station	1
GOT Communication Port No.	5001
Retry	3 times
Startup Time	3 sec
Timeout Time	3 sec
Delay Time	0ms

*1 Set the GOT network No. according to the third octet (network No.) of the Ethernet adapter module IP address.

■GOT Ethernet Setting (standard port)

Item	Set value
GOT IP Address	192.168.3.18
Subnet Mask	255.255.255.0
Default Gateway	0.0.0.0
Peripheral Communication Port No.	5015
Transparent Port No.	5014

■Connected Ethernet Controller Setting

Item		Set value
Ethernet Setting No.1	Host	*
	Net No.	3*1
	Station	30*2
	Unit Type	NZ2GF-ETB
	IP address	192.168.3.30*3
	Port No.*4	5001
	Communication*4	UDP

*1 Set according to the third octet (network No.) of the Ethernet adapter module IP address.
*2 Set according to the fourth octet (PC No.) of the Ethernet adapter module IP address.
*3 Set according to the Ethernet adapter module IP address.
*4 The following [Port No.] and [Communication format] can also be set.
[Port No.]: 5002
[Communication]: TCP

■Routing parameter setting

Item	Set value
Transfer Network No.	1*1
Relay Network No.	3*2
Relay Station No.	30*3

*1 Set the same value as the Ethernet adapter module network No.
*2 Set according to the third octet (network No.) of the Ethernet adapter module IP address.
*3 Set according to the fourth octet (PC No.) of the Ethernet adapter module IP address.

Connection to PERIPHERAL I/F

This section describes the settings of the GOT and Built-in Ethernet port Motion CPU in the following system configuration.

Point

• GOT type setting

For details, refer to the following.

☞ Page 39 Setting [Controller Type]

• CPU No. specification of Q170MCPU and Q170MSCPU(-S1)

Set whether to monitor the PLC CPU area or the Motion CPU area of Q170MCPU or Q170MSCPU(-S1) by the CPU No. specification. For details, refer to the following.

☞ Page 368 Precautions

• PLC type of GX Works2/GX Developer

When creating a program, set the following PLC type:

For Q173D(S)CPU/Q172D(S)CPU

QnUD(E)(H)CPU

For Q170MCPU and Q170MSCPU(-S1) Q03UDCPU

Q03UDCPU

• Built-in Ethernet port CPU

For details of Built-in Ethernet port CPU, refer to the following manual.

📖User's Manual of Q173D(S)CPU/Q172D(S)CPU , Q170MCPU, and Q170MS(-S1)CPU

• When connecting to multiple GOTs

When connecting two or more GOTs in the Ethernet network, set each [GOT Station] to the GOT.

☞ Page 368 Precautions

System configuration

Leave the Built-in Ethernet port Motion CPU settings as default in the following system configuration.

Set [Controller Setting] and [Connected Ethernet Controller Setting] on GT Designer3, and then connect Built-in Ethernet port CPU to the GOT.

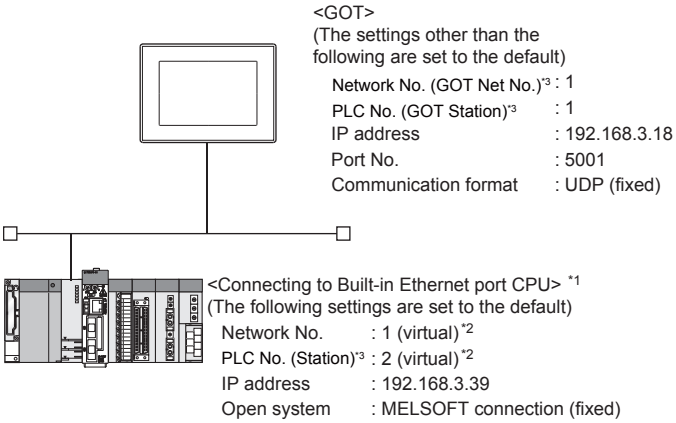

*1 For the settings when using system devices such as a hub, refer to the following.
☞ Page 302 Connection to MELSEC-Q/L series Built-in Ethernet port CPU

*2 These setting items do not exist at the PLC side. However, the virtual values must be set on the GOT side.
☞ Page 359 [Controller Setting] and [Connected Ethernet Controller Setting] of GT Designer3

*3 For the following setting contents, the setting names are different on the PLC side and the GOT side.

Contents of setting	Setting names		
	PLC side	GOT side	
		Controller Setting	Connected Ethernet Controller Setting
Network No.	Network No.	GOT Net No.	Net No.
PC No.	Station	GOT Station	Station

Basic setting of MT Works2

Use the default values of the basic setting for the system configuration above.

■Built-in Ethernet port

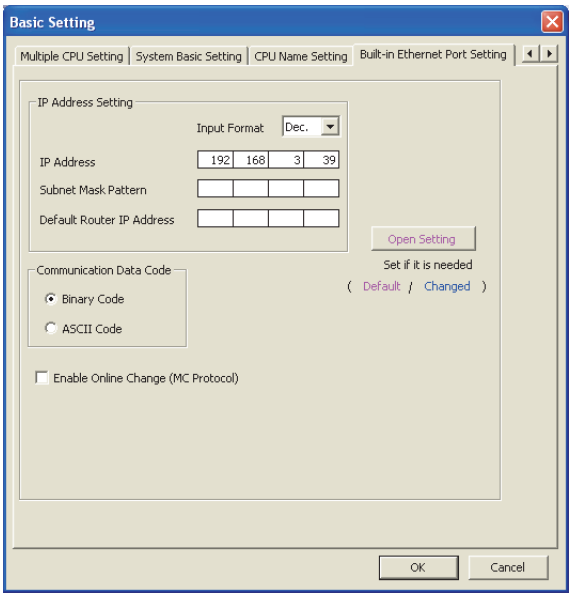

Item	Set value	Setting necessity at GOT connection
IP address	192.168.3.39 (Default)	○
Subnet mask pattern	-	×
Default router IP address	-	×
Communication data code	(Use default value)	△
Enable online change (MC protocol)		△
Open settings	☞ Page 358 Open settings	○

○ : Necessary △ : As necessary × : Not necessary

■Open settings

The setting is required for all the connected GOTs.

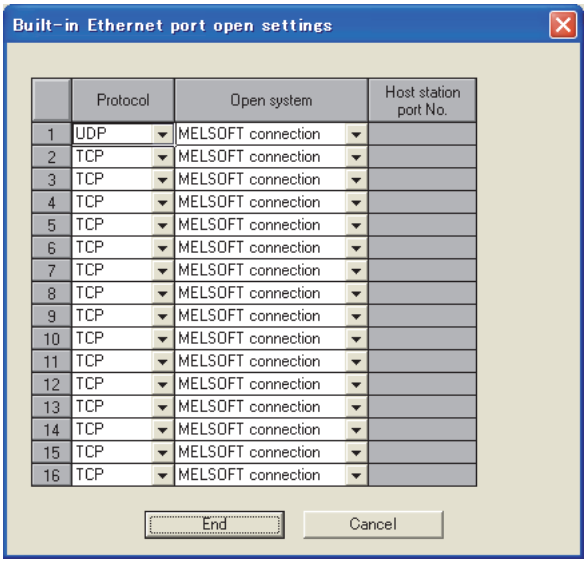

Item	Set value
Protocol	UDP (fixed)
Open system	MELSOFT connection (fixed)
Host station port No.	-

[Controller Setting] and [Connected Ethernet Controller Setting] of GT Designer3

For the setting method of [Controller Setting] and [Connected Ethernet Controller Setting] of GT Designer3, refer to the following.

☞ Page 248 Setting communication interface (Controller Setting)

Point

[Connected Ethernet Controller Setting] when connecting a Built-in Ethernet port Motion CPU and the GOT
The setting items for the network No. and station No. do not exist on the motion CPU side.
Set the network No. and station No. on the GOT side.
Set the network No. that is not existed on the network system and any station No..

■Controller Setting

Item	Set value
GOT Net No.	1
GOT Station	1
GOT Communication Port No.	5001
Retry	3times
Startup Time	3 sec
Timeout Time	3 sec
Delay Time	0ms

■GOT Ethernet Setting (standard port)

Item	Set value
GOT IP Address	192.168.3.18
Subnet Mask	255.255.255.0
Default Gateway	0.0.0.0
Peripheral Communication Port No.	5015
Transparent Port No.	5014

■Connected Ethernet Controller Setting

Item		Set value
Ethernet setting No.1	Host	*
	Net No.	1*1
	Station	2*2
	Unit Type	QnUD(P)V/QnUDE(H)
	IP address	192.168.3.39*3
	Port No.*4	5006
	Communication*4	UDP

*1 Set the same value as GOT Net No.
*2 Set a value different from the GOT station number.
*3 Set the value to the IP address of the Built-in Ethernet port Motion CPU.
*4 The following [Port No.] and [Communication format] can also be set.
[Port No.]: 5007
[Communication]: TCP

Checking communication state of Connecting to Built-in Ethernet port CPU

■When using the Windows Command Prompt

Execute a Ping command at the Command Prompt of Windows.

- At normal communication

C:\>Ping 192.168.3.39

Reply from 192.168.3.39:bytes=32 time<1ms TTL=32

- At abnormal communication

C:\>Ping 192.168.3.39

Request timed out.

■At abnormal communication

At abnormal communication, check the followings and execute the Ping command again.

- Cable connecting condition
- Confirmation of switch and network parameter setting
- Operation state of PLC CPU (faulty or not)
- The IP address of Built-in Ethernet port CPU specified in the Ping command

Point

Ethernet diagnostics of GX Works2/GX Developer

Ethernet diagnostics of GX Works2/GX Developer is available to a Ping test from the PLC.

For details of Ethernet diagnostics of GX Works2/GX Developer, refer to the following manual.

📖GX Works2 Version1 Operating Manual (Common)

📖GX Developer Version8 Operating Manual

Connection to CC-Link IE TSN-equipped module

This section describes the settings of the GOT and a CC-Link IE TSN-equipped module in the following system configuration.

Point

- CC-Link IE TSN-equipped module

For details on the CC-Link IE TSN-equipped module, refer to the following.

MELSEC iQ-R CC-Link IE TSN User's Manual (Startup)

MELSEC iQ-R CC-Link IE TSN Plus Master/Local Module User's Manual

MELSEC iQ-F FX5 User's Manual (CC-Link IE TSN)

- When connecting to multiple GOTs

When connecting two or more GOTs in the Ethernet network, set each [GOT Station] to the GOT.

Page 368 Precautions

4

System configuration

The following shows a system configuration example for connecting to the CC-Link IE TSN master/local module (RJ71GN11-T2).

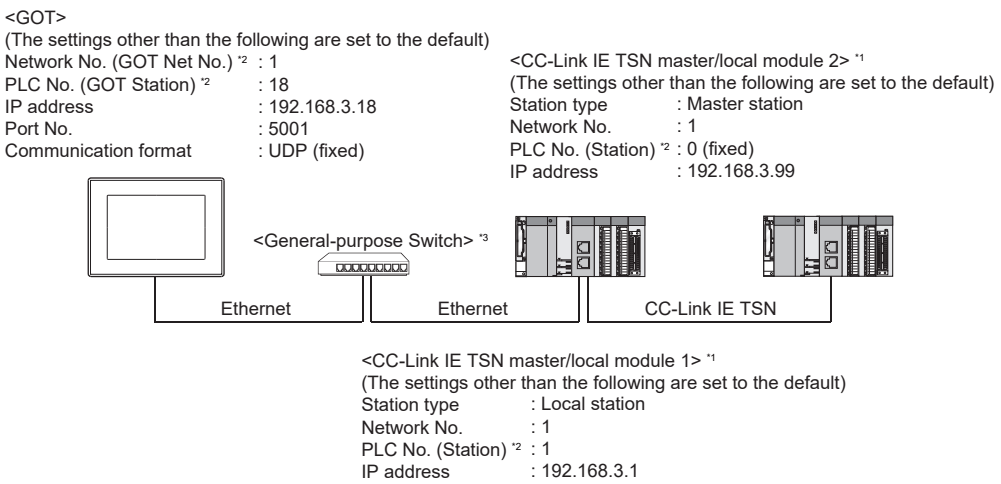

*1 The CC-Link IE TSN master/local module is mounted on slot 0 of the base unit.
The start XY number of the CC-Link IE TSN master/local module is set to "0".

*2 For the following setting contents, the setting names are different on the PLC side and the GOT side.

Contents of setting	Setting names		
	PLC side	GOT side	
		Controller Setting	Connected Ethernet Controller Setting
Network No.	Network No.	GOT Net No.	Net No.
PC No.	Station	GOT Station	Station

*3 A General-purpose Switch is required to connect the GOT and a CC-Link IE TSN master/local module.
For usable General-purpose Switches, refer to the following.
Manual of the CC-Link IE TSN master/local module to be used

[Module Parameter] of GX Works3

The following shows a parameter setting example for connecting to the CC-Link IE TSN master/local module (RJ71GN11-T2).
For details on the settings of the PLC, refer to the following manual.

Manual of the CC-Link IE TSN master/local module to be used

■[Required Settings]

Example: Settings of CC-Link IE TSN master/local module 1

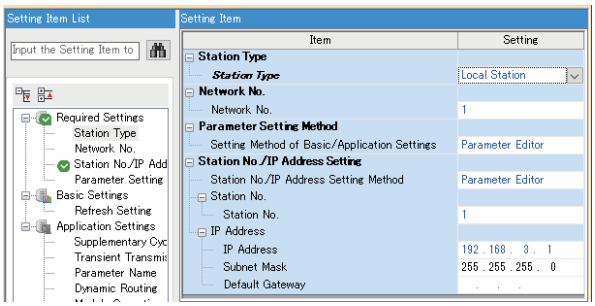

Item	Set value	
	CC-Link IE TSN master/local module 1	CC-Link IE TSN master/local module 2
Station type	Local station	Master station
Network No.	1	1
Station No.	1	0 (fixed)
IP Address	192.168.3.1	192.168.3.99

[Controller Setting] and [Connected Ethernet Controller Setting] of GT Designer3

The following shows a setting example of GT Designer3 for connecting to the CC-Link IE TSN master/local module (RJ71GN11-T2).

For the setting method of [Controller Setting] and [Connected Ethernet Controller Setting] of GT Designer3, refer to the following.

☞ Page 248 Setting communication interface (Controller Setting)

■Controller Setting

Item	Set value
GOT Net No.	1
GOT Station	18
GOT Communication Port No.	5001
Retry	3 times
Startup Time	3 sec
Timeout Time	3 sec
Delay Time	0ms

■GOT Ethernet Setting (standard port)

Item	Set value
GOT IP Address	192.168.3.18
Subnet Mask	255.255.255.0
Default Gateway	0.0.0.0
Peripheral Communication Port No.	5015
Transparent Port No.	5014

■Connected Ethernet Controller Setting

Item		Set value
Ethernet setting No.1	Host	*
	Net No.	1 *1
	Station	1 *2
	Unit Type *3	RJ71GN11-T2/RD78G(H)
	IP Address	192.168.3.1
	Port No. *4	5001
	Communication *4	UDP

*1 Set the same value as GOT Net No.
*2 Set a value different from the GOT station number.
*3 For the MELSEC iQ-F series, select [FX5-CCLGN-MS/FX5-nSSC-G].
For RJ71GN11-EIP, select [RJ71GN11-T2/RD78G(H)].
*4 The following [Port No.] and [Communication format] can also be set.
• MELSEC iQ-R Series
[Port No.]: 5002
[Communication]: TCP
• MELSEC iQ-F Series
[Port No.]: 5554
[Communication]: TCP

Checking the communication status of the CC-Link IE TSN-equipped module

■When using the Windows Command Prompt

Execute a Ping command at the Command Prompt of Windows.

- At normal communication

C:\>Ping 192.168.3.1

Reply from 192.168.3.1:bytes=32 time<1ms TTL=32

- At abnormal communication

C:\>Ping 192.168.3.1

Request timed out.

■At abnormal communication

At abnormal communication, check the following and execute the Ping command again.

- Connection status of the CC-Link IE TSN-equipped module
- Cable connecting condition
- Confirmation of switch and network parameter setting
- Operation state of PLC CPU (faulty or not)
- IP address of the CC-Link IE TSN-equipped module specified in the ping command

Point

Ethernet diagnostics of GX Works3

Ethernet diagnostics of GX Works3 is available to a Ping test from the PLC.

For details of Ethernet diagnostics of GX Works3, refer to the following manual.

📖Manual of PLC to be used

Connection to built-in Ethernet port of Motion module

This section describes the settings of the GOT and Motion module in the following system configuration.

Point

For details on the Motion module, refer to the following.
MELSEC iQ-R Motion Module User's Manual (Startup)

System Configuration

<GOT>
(The settings other than the following are set to the default)

Network No. (GOT Net No.) *1	: 1
PLC No. (GOT Station) *1	: 18
IP address	: 192.168.3.18
Port No.	: 5001
Communication format	: UDP

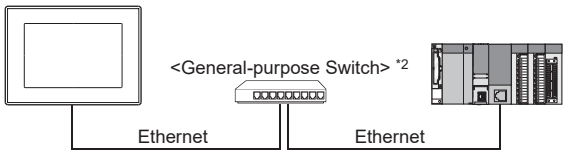

<Motion module>
(The settings other than the following are set to the default)

Network No.	: 1
PLC No. (Station) *1	: 0(fixed)
IP address	: 192.168.3.39

*1 For the following settings, the setting names differ on the PLC side and on the GOT side.

Contents of setting	Setting names		
	PLC side	GOT side	
		Controller Setting	Connected Ethernet Controller Setting
Network No.	Network No.	GOT Net No.	Net No.
PC No.	Station	GOT Station	Station

*2 For usable General-purpose Switches, refer to the following.
MELSEC iQ-R Motion Module User's Manual (Startup)

[Module Parameter (Network)] of GX Works3

For details on the Motion module side settings, refer to the following.
MELSEC iQ-R Motion Module User's Manual (Network)

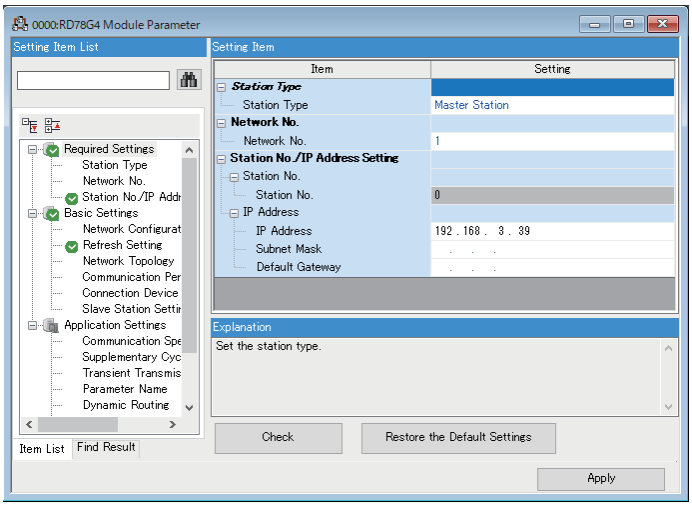

Item		Set value
Required Settings	Network No.	1
	IP Address	192.168.3.39

[Controller Setting] and [Connected Ethernet Controller Setting] of GT Designer3

For the setting method of [Controller Setting] and [Connected Ethernet Controller Setting] of GT Designer3, refer to the following.

☞ Page 248 Setting communication interface (Controller Setting)

■Controller Setting

Item	Set value
GOT Net No.	1
GOT Station	18
GOT Communication Port No.	5001
Retry	3 times
Startup Time	3 sec
Timeout Time	3 sec
Delay Time	0ms

■GOT Ethernet Setting (standard port)

Item	Set value
GOT IP Address	192.168.3.18
Subnet Mask	255.255.255.0
Default Gateway	0.0.0.0
Peripheral Communication Port No.	5015
Transparent Port No.	5014

■Connected Ethernet Controller Setting

Item		Set value
Ethernet setting No.1	Host	*
	Net No.	1 *1
	Station	0 (fixed)
	Unit Type	RJ71GN11-T2/RD78G (H) (fixed)
	IP Address	192.168.3.39
	Port No.	5001
	Communication *2	UDP

*1 Set the same value as GOT Net No.
*2 If you set [Communication] to [TCP], set [Port No.] to [5002].

Checking the communication status of the Motion module

■When using the Windows Command Prompt

Execute a Ping command at the Command Prompt of Windows.

- At normal communication

C:\>Ping 192.168.3.39

Reply from 192.168.3.39:bytes=32 time<1ms TTL=32

- At abnormal communication

C:\>Ping 192.168.3.39

Request timed out.

■At abnormal communication

At abnormal communication, check the following and execute the Ping command again.

- IP address of the Motion module specified by the ping command execution.
- Operation state of PLC CPU (faulty or not)
- Connection status of the Motion module
- Cable connecting condition
- Confirmation of switch and network parameter setting

Connection to Motion module through Built-in Ethernet port of PLC

When connecting to MELSEC iQ-R series

For the connection between the GOT and MELSEC iQ-R series Built-in Ethernet port CPU, refer to the following.

☞ Page 263 Connection to MELSEC iQ-R series Built-in Ethernet port CPU

For the details of the motion module, refer to the following manual.

📖MELSEC iQ-R Motion Module User's Manual (Startup)

When connecting to MELSEC iQ-F series

For the connection between the GOT and MELSEC iQ-F series Built-in Ethernet port CPU, refer to the following.

☞ Page 292 Connection to MELSEC iQ-F Series built-in Ethernet port CPU

For the details of the motion module, refer to the following manual.

📖MELSEC iQ-F FX5 Motion Module/Simple Motion Module User's Manual (Startup)

4.5 Precautions

Connection to QnA (S) CPU type

Use B or a later function version of Ethernet module (QnA Series) and PLC CPU (QnA/QnASCPU type).

Connection to QSCPU

The GOT can only read device data and sequence programs by the ladder monitor function in the QSCPU.
The GOT cannot write any data to the QSCPU.

Connection to Q170MCPU or Q170MSCPU(-S1)

Set [CPU No.] to 2 in the device setting to monitor the device of the Motion CPU area (CPU No. 2).
When [CPU No.] is set to 1, the device on the PLC CPU area (CPU No. 1) is monitored.
When [CPU No.] is set to 0, the monitoring target differs depending on the GOT connection destination. Refer to the following.

GOT connection destination	Monitoring target
QJ71E71 module	PLC CPU area (CPU No.1)
Q170MCPU Q170MSCPU(-S1)	Motion CPU area (CPU No.2)

When [CPU No.] is set to the number other than 0 to 2, a communication error occurs and the monitoring cannot be executed.
For the setting of [CPU No.], refer to the following.
GT Designer3 (GOT2000) Screen Design Manual

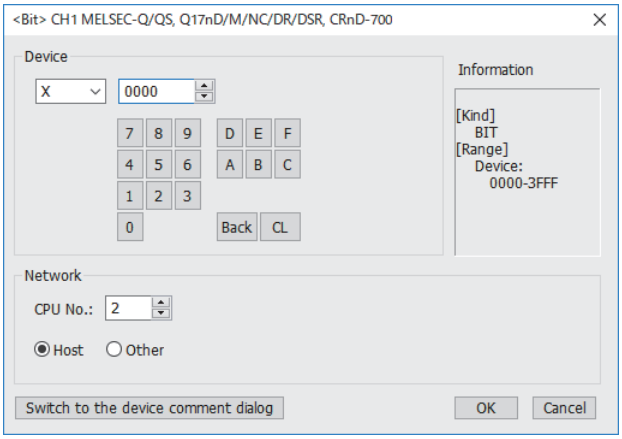

Connection in the multiple CPU system

When the GOT is connected to multiple CPU system, the following time is taken until when the PLC runs.
MELSEC iQ-R series, Motion CPU (MELSEC iQ-R series), QCPU (Q mode), Motion CPU (Q series): 10 seconds or more
MELDAS C70: 18 seconds or more
When the GOT starts before the PLC runs, a system alarm occurs. Adjust the opening screen time in the GOT setup so that no system alarm occurs.
GT Designer3 (GOT2000) Screen Design Manual

Connection to LCPU

LCPU may diagnose (check file system, recovering process, etc.) the SD memory card when turning on the power or when resetting. Therefore, it takes time until the SD memory card becomes available. When the GOT starts before the SD card becomes available, a system alarm occurs. Adjust the opening screen time in the GOT setup so that no system alarm occurs.

📖GT Designer3 (GOT2000) Screen Design Manual

Connecting multiple GOTs

■Setting GOT Station

When connecting two or more GOTs in the Ethernet network, set each [GOT Station] to the GOT.

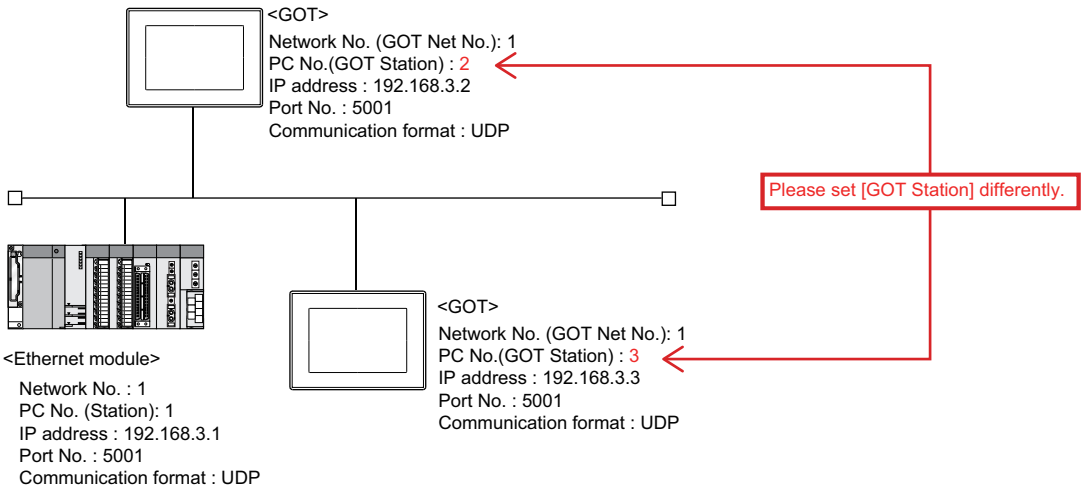

☞ Page 248 Setting communication interface (Controller Setting)

■Setting IP address

Do not use the IP address "192.168.0.18" when using multiple GOTs with the GOT 1000 series mixed.
A communication error may occur on the GOT with the IP address.

■Setting for starting up multiple GOTs simultaneously (When connected to Built-in Ethernet port CPU)

When connecting multiple GOTs to one Built-in Ethernet port CPU, adjust the timing of GOT communication start. When the communication concentrates on the PLC, the communication between GOT and PLC becomes difficult, and the monitoring by GOT may not start. As a method for adjusting the timing, communicating one GOT alone first, and then communicating the other GOTs is effective.

Set the following items on each GOT.

- [Startup Time] of [Controller Setting], or [Title Display Time] of [GOT Setup].
- [Timeout Time] of [Controller Setting]

The following shows a setting example.

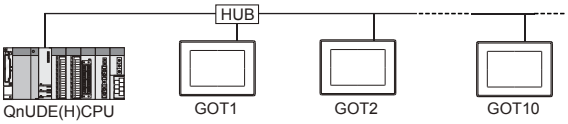

Item	GOT1	GOT2	GOT10
Startup Time	3sec (default)	4sec	4sec
Timeout Time	3sec (default)	4sec	4sec

Connecting multiple network equipment (including GOT) in a segment

By increasing the network load, the transmission speed between the GOT and PLC may be reduced.
The following actions may improve the communication performance.

- Using a switching hub
- More high speed by 100BASE-TX (100Mbps)
- Reduction of the monitoring points on GOT

Setting an IP address

Do not use "0" and "255" at the end of an IP address.
(Numbers of *.*.*.0 and *.*.*.255 are used by the system)
The GOT may not monitor the controller correctly with the above numbers.
Consult with the administrator of the network before setting an IP address to the GOT and controller.

Monitoring a PLC on a different network in the same line

When the network No. of the GOT does not match with that of the PLC on the same Ethernet, the PLC cannot be monitored.
When monitoring, set the same network No. as that of the GOT, or connect a Ethernet module to the PLC and set the routing setting to monitor as other network.
When using the multi-channel connection for GT27, GT25, or GS25, set a different network No. for each channel.

Remote password

Do not set a remote password for the following CPUs.
Otherwise, monitoring with the GOT becomes unavailable.
RCPU, FX5UCPU, QCPU (Q mode), LCPU

Connecting to the built-in Ethernet port of Built-in Ethernet port CPU

Connect to GOT after turning on the network equipment such as Built-in Ethernet port CPU or HUB to enable the communication.
When the communication with Built-in Ethernet port CPU is not available, a communication error may occur on the GOT.

Number of CPU modules connectable to one GOT

<For GT27, GT25, GT23, GS25>
RCPU, FX5UCPU, QCPU, LCPU, ACPU, FXCPU: 128 CPU modules in total can be set for channels No. 1 to No. 4 (16 or fewer CPU modules are recommended.).
The following shows the maximum number of CPU modules that can be set for one channel.
RCPU: 119
FX5UCPU, QCPU, LCPU, ACPU, FXCPU: 63
<For GT21, GS21>
RCPU, FX5UCPU, QCPU, LCPU, FXCPU: 4

Connecting to RnSFCPU

The RnSFCPU takes 10 seconds or more to run.
If the GOT is started before the RnSFCPU runs, a system alarm occurs.
To prevent a system alarm from occurring, adjust the title display time in the [GOT Setup] dialog.
📖GT Designer3 (GOT2000) Screen Design Manual

Connecting to PERIPHERAL I/F

■Monitoring other stations

The GOT cannot monitor other stations. Routing parameter setting is invalid.

■Monitoring servo amplifiers from a robot controller through a simple motion module

When a GOT is connected to the PERIPHERAL I/F of the robot controller, servo amplifiers cannot be monitored through a simple motion module.

■Monitoring a CPU module on a different network from CR800-Q (Q172DSRCPU)

When a CPU module number on a different network is specified for PERIPHERAL I/F of CR800-Q (Q172DSRCPU), the specified CPU module number within the host network is monitored.

Connecting to the built-in Ethernet port of QnUD(P)VCPU using [MELSOFT Connection Extended Setting]

When [Port No.] is set to [5001] in [Connected Ethernet Controller Setting] on GT Designer3, the built-in Ethernet port of QnUD(P)VCPU is accessible using [MELSOFT Connection Extended Setting].

The GOT may not be able to access the PLC depending on the system configuration.

The following shows the examples of system configuration to which the GOT cannot access, and the countermeasures.

■Example 1

When connected via a CPU module whose [MELSOFT Connection Extended Setting] is set to [Use], the GOT cannot access another CPU module whose [MELSOFT Connection Extended Setting] is set to [Not to Use], or if that CPU does not support [MELSOFT Connection Extended Setting].

- Figure

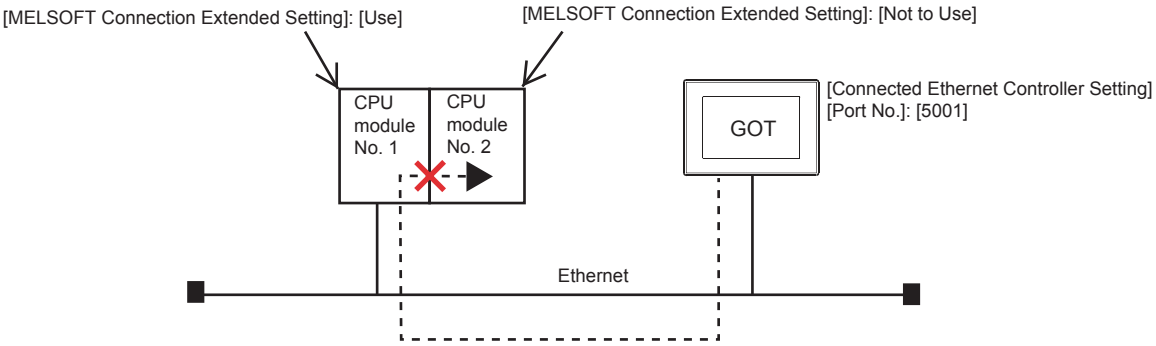

1) Countermeasures

Take one of the following countermeasures.

- Change [MELSOFT Connection Extended Setting] on the PLC side.

Set [MELSOFT Connection Extended Setting] to [Use] for CPU module No. 2 that supports [MELSOFT Connection Extended Setting].

📖QnUCPU User's Manual (Communication via Built-in Ethernet Port)

- Change [Connected Ethernet Controller Setting] on the GOT side.

Set [Port No.] to [5006] in [Connected Ethernet Controller Setting] on the GOT side.

☞ Page 255 Connected Ethernet controller setting

■Example 2

In a multiple CPU configuration, when connected via a CPU module whose [MELSOFT Connection Extended Setting] is set to [Use], the GOT cannot access a CPU module on a different network via the network module that controls another CPU module whose [MELSOFT Connection Extended Setting] is set to [Not to Use] or if that CPU module does not support [MELSOFT Connection Extended Setting].

- Figure

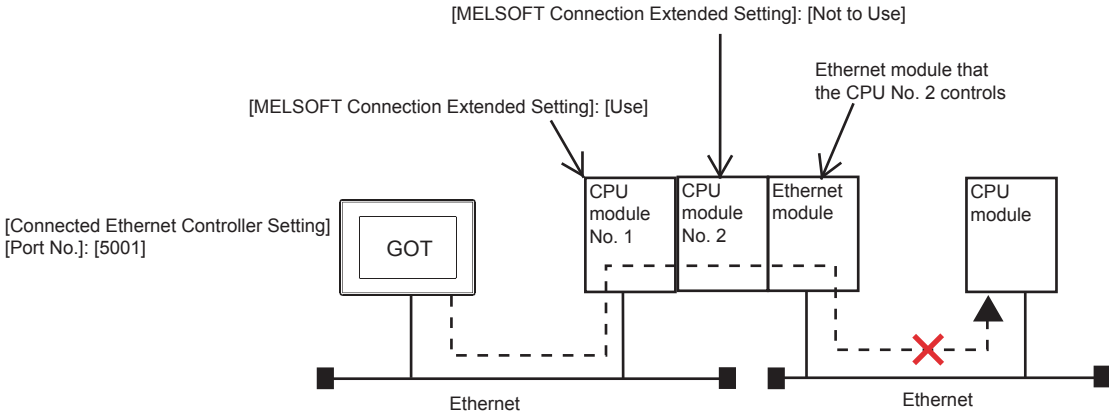

1) Countermeasures

Take one of the following countermeasures.

- Change [MELSOFT Connection Extended Setting] on the PLC side.

Set [MELSOFT Connection Extended Setting] to [Use] for CPU module No. 2 that supports [MELSOFT Connection Extended Setting].

📖QnUCPU User's Manual (Communication via Built-in Ethernet Port)

- Change [Connected Ethernet Controller Setting] on the GOT side.

Set [Port No.] to [5006] in [Connected Ethernet Controller Setting] on the GOT side.

☞ Page 255 Connected Ethernet controller setting

■Example 3

• Figure 1

In a multiple CPU configuration, when an Ethernet module is mounted on the CPU base unit, and the same network number is set to Built-in Ethernet port CPU and the Ethernet module, the GOT cannot monitor the other CPUs in the multiple CPU configuration via Built-in Ethernet port CPU whose [MELSOFT Connection Extended Setting] is set to [Use].

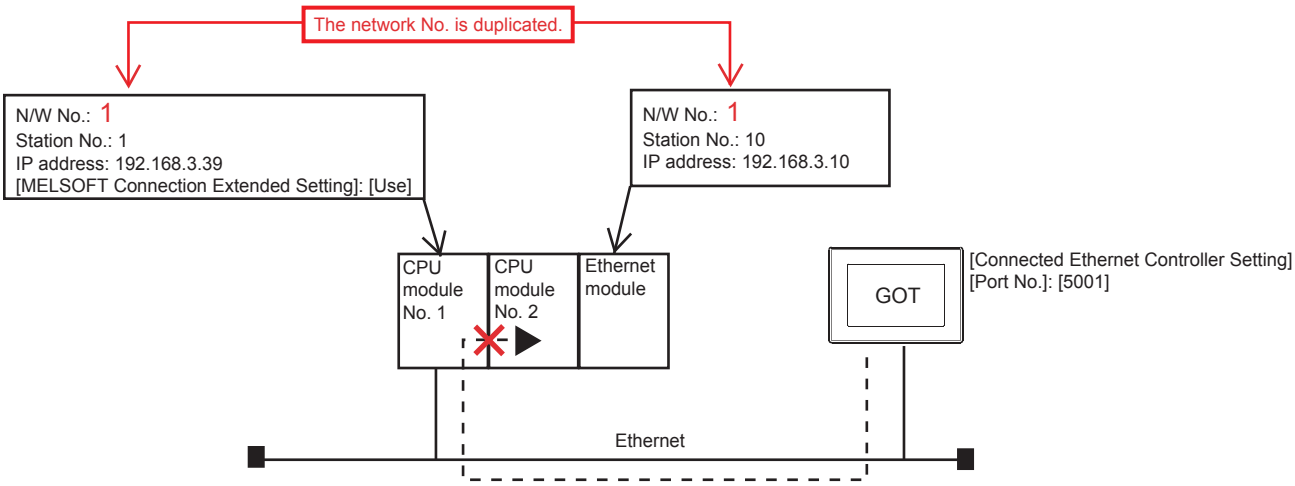

1) Countermeasures

Take one of the following countermeasures.

• Change [Connected Ethernet Controller Setting] on the GOT side.

Set [Port No.] to [5006] in [Connected Ethernet Controller Setting] on the GOT side.

☞ Page 255 Connected Ethernet controller setting

• Change the connection route

Connect the GOT to CPU module No. 2 via the Ethernet module.

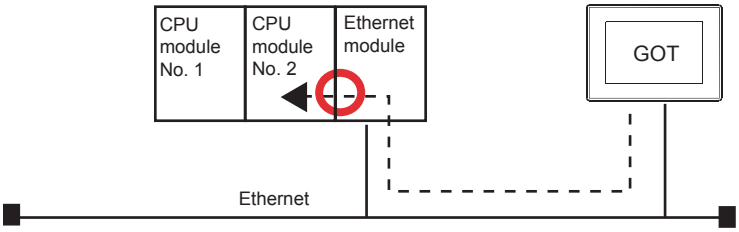

• Figure 2

In the following system configuration, when the same network number is set to Built-in Ethernet port CPU and the Ethernet module, the GOT is inaccessible via Built-in Ethernet port CPU whose [MELSOFT Connection Extended Setting] is set to [Use], using GT Designer3.

Error code	Description
801fD0A3	This error occurs when send processing of the transient transmission has failed in the CC-Link IE Field Network connection or other connections. (For example, when data is not transferred to the GOT but to a different network)
1000000C	This error occurs when send processing of the transient transmission has failed in the Ethernet module (QJ71E71-100).

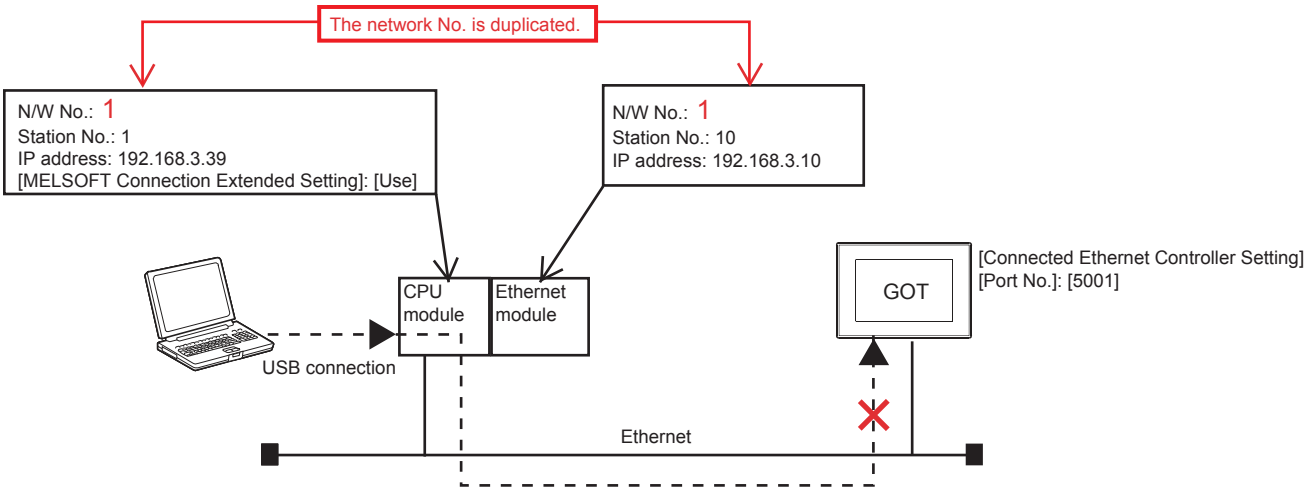

1) Counter measures

Take one of the following counter measures.

• Change the network No.

Do not set the built-in Ethernet port number of the CPU to the network number of the Ethernet module.

• Change the connection route.

Connect the GOT to CPU module No. 2 via the Ethernet module.

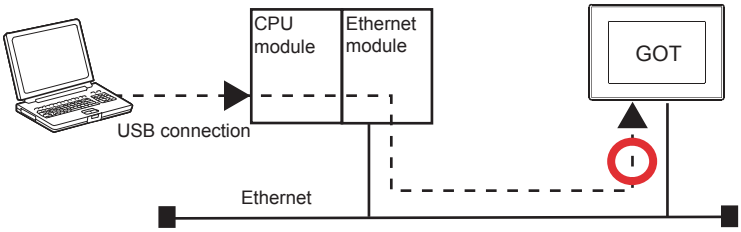

5 DIRECT CPU CONNECTION (SERIAL)

- Page 375 Connectable Model List
- Page 381 System Configuration
- Page 420 Connection Diagram
- Page 426 GOT Side Settings
- Page 434 PLC Side Setting
- Page 436 Precautions

5.1 Connectable Model List

The following table shows the connectable models.

Series	Model name	Clock	Communication type	Connectable model	Refer to
MELSEC iQ-R Series	R00CPU	○	RS-232 RS-422	-	-
	R01CPU				
	R02CPU				
	R04CPU				
	R08CPU				
	R16CPU				
	R32CPU				
	R120CPU				
	R08PCPU				
	R16PCPU				
	R32PCPU				
	R120PCPU				
	R04ENCPU				
	R08ENCPU				
	R16ENCPU				
	R32ENCPU				
	R120ENCPU				
	R08PSFCPU				
	R16PSFCPU				
	R32PSFCPU				
	R120PSFCPU				
	R08SFCPU				
	R16SFCPU				
	R32SFCPU				
	R120SFCPU				
Motion CPU (MELSEC iQ-R Series)	R16MTCPU	○	RS-232 RS-422	-	-
	R32MTCPU				
	R64MTCPU				
C Controller module (MELSEC iQ-R Series)	R12CCPU-V	○	RS-232 RS-422	-	-
MELSECWinCPU (MELSEC iQ-R Series)	R102WCPU-W	×	RS-232 RS-422	-	-
CNC C80	R16NCCPU-S1	○	RS-232 RS-422	-	-

Series	Model name	Clock	Communication type	Connectable model	Refer to
Robot controller (MELSEC iQ-R Series)	CR800-R(R16RTCPU)	○	RS-232 RS-422	-	-
CC-Link IE Field Network head module	RJ72GF15-T2	×	RS-232 RS-422	-	-
MELSEC iQ-F Series	FX5U FX5UC FX5UJ FX5S	○	RS-232 RS-422	GT27 GT25 GT23 GT21 07W GT21 05Q GT21 04R GT21 03P 04P ET/R4 GT21 03P 04P R4 GT21 03P 04P R2 GT21 03P 04P R4-5V GS25 GS21	☞ Page 389 Connection to MELSEC iQ-F Series
MELSEC-Q (Q mode)	Q00JCPU Q00CPU*1 Q01CPU*1	○	RS-232 RS-422	GT27 GT25 GT23 GT21 07W GT21 05Q GT21 04R GT21 03P 04P R4 GT21 03P 04P R2 GS25 GS21	☞ Page 381 Connection to QCPU
	Q02CPU*1 Q02HCPU*1 Q06HCPU*1 Q12HCPU*1 Q25HCPU*1	○	RS-232 RS-422	GT27 GT25 GT23 GT21 07W GT21 05Q GT21 04R GT21 03P 04P ET/R4 GT21 03P 04P R4 GT21 03P 04P R2 GS25 GS21	☞ Page 381 Connection to QCPU
	Q02PHCPU Q06PHCPU Q12PHCPU Q25PHCPU Q12PRHCPU (Main base) Q25PRHCPU (Main base)	○	RS-232 RS-422	GT27 GT25 GT23 GS25	☞ Page 381 Connection to QCPU
	Q12PRHCPU (Extension base) Q25PRHCPU (Extension base)	○	-	-	-
	Q00UJCPU Q00UJCPU-S8 Q00UCPU Q01UCPU Q02UCPU Q03UDCPU Q04UDHCPU Q06UDHCPU Q10UDHCPU Q13UDHCPU Q20UDHCPU Q26UDHCPU	○	RS-232 RS-422	GT27 GT25 GT23 GT21 07W GT21 05Q GT21 04R GT21 03P 04P ET/R4 GT21 03P 04P R4 GT21 03P 04P R2 GS25 GS21	☞ Page 381 Connection to QCPU
	Q03UDECPU Q04UDEHCPU Q06UDEHCPU Q10UDEHCPU Q13UDEHCPU Q20UDEHCPU Q26UDEHCPU Q50UDEHCPU Q100UDEHCPU Q03UDVCPU Q04UDVCPU Q06UDVCPU Q13UDVCPU Q26UDVCPU	○	RS-232 RS-422	GT27 GT25 GT23 GT21 07W GT21 05Q GT21 04R GT21 03P 04P ET/R4 GT21 03P 04P R4 GT21 03P 04P R2 GS25 GS21 *2	☞ Page 381 Connection to QCPU
C Controller module (Q Series)	Q12DCCPU-V*3 Q24DHCCPU-V/VG Q24DHCCPU-LS Q26DHCCPU-LS	○	RS-232 RS-422	GT27 GT25 GT23 GT21 07W GT21 05Q GT21 04R GT21 03P 04P ET/R4 GT21 03P 04P R4 GT21 03P 04P R2 GS25 GS21 *2	☞ Page 381 Connection to QCPU
MELSEC-QS	QS001CPU	○	-	-	-

Series	Model name	Clock	Communication type	Connectable model	Refer to
MELSEC-L	L02CPU*4 L06CPU*4 L26CPU*4 L26CPU-BT*4 L02CPU-P*4 L06CPU-P*4 L26CPU-P*4 L26CPU-PBT*4 L02SCPU L02SCPU-P	○	RS-232 RS-422	GT27 GT25 GT23 GT21 07W GT21 05Q GT21 04R GT21 03P 04P ET/R4 GT21 03P 04P R4 GT21 03P 04P R2 GS25 GS21	☞ Page 383 Connection to LCPU
MELSEC-Q (A mode)	Q02CPU-A Q02HCPU-A Q06HCPU-A	○	RS-232 RS-422	GT27 GT25 GT23 GT21 07W GT21 05Q GT21 04R GT21 03P 04P ET/R4 GT21 03P 04P R4 GT21 03P 04P R2 GS25 GS21	☞ Page 381 Connection to QCPU
MELSEC-QnA (QnACPU)	Q2ACPU Q2ACPU-S1 Q3ACPU Q4ACPU	○	RS-422	GT27 GT25 GT23 GT21 07W GT21 05Q GT21 04R GT21 03P 04P ET/R4 GT21 03P 04P R4 GS25 GS21	☞ Page 387 Connection to QnACPU
	Q4ARCPU	○	RS-422	GT27 GT25 GT23 GS25	☞ Page 387 Connection to QnACPU
MELSEC-QnA (QnASCPU)	Q2ASCPU Q2ASCPU-S1 Q2ASHCPU Q2ASHCPU-S1	○	RS-422	GT27 GT25 GT23 GT21 07W GT21 05Q GT21 04R GT21 03P 04P ET/R4 GT21 03P 04P R4 GS25 GS21	☞ Page 387 Connection to QnACPU
MELSEC-A (AnCPU)	A2UCPU A2UCPU-S1 A3UCPU A4UCPU A2ACPU A2ACPUP21 A2ACPUR21 A2ACPU-S1 A2ACPUP21-S1 A2ACPUR21-S1 A3ACPU A3ACPUP21 A3ACPUR21 A1NCPU*5 A1NCPUP21*5 A1NCPUR21*5 A2NCPU*5 A2NCPUP21*5 A2NCPUR21*5 A2NCPU-S1*5 A2NCPUP21-S1*5 A2NCPUR21-S1*5 A3NCPU*5 A3NCPUP21*5 A3NCPUR21*5	○	RS-422	GT27 GT25 GT23 GT21 07W GT21 05Q GT21 04R GT21 03P 04P R4 GS25 GS21	☞ Page 388 Connection to ACPU

Series	Model name	Clock	Communication type	Connectable model	Refer to
MELSEC-A (AnSCPU)	A2USCPU	○	RS-422	GT27 GT25 GT23 GT21 07W GT21 05Q GT21 04R GT21 03P 04P R4 GS25 GS21	☞ Page 388 Connection to ACPU
	A2USCPU-S1				
	A2USHCPU-S1				
	A1SCPU				
	A1SCPUC24-R2				
	A1SHCPU				
	A2SCPU*6				
	A2SCPU-S1*6				
	A2SHCPU				
	A2SHCPU-S1				
	A1SJCPU				
	A1SJCPU-S3				
	A1SJHCPU				
MELSEC-A	A0J2HCPU*6	×	RS-422	GT27 GT25 GT23 GT21 07W GT21 05Q GT21 04R GT21 03P 04P R4 GS25 GS21	☞ Page 388 Connection to ACPU
	A0J2HCPUP21*6				
	A0J2HCPUR21*6				
	A0J2HCPU-DC24*6				
	A2CCPU*6	○	RS-422	GT27 GT25 GT23 GT21 07W GT21 05Q GT21 04R GT21 03P 04P R4 GS25 GS21	☞ Page 388 Connection to ACPU
	A2CCPUP21				
	A2CCPUR21				
	A2CCPUC24				
	A2CCPUC24-PRF				
	A2CJCPU-S3				
	A1FXCPU				
Motion CPU (Q Series)	Q172CPU*7*8 Q173CPU*7*8 Q172CPUN*7 Q173CPUN*7	○	RS-232 RS-422	GT27 GT25 GT23 GT21 07W GT21 05Q GT21 04R GT21 03P 04P ET/R4 GT21 03P 04P R4 GT21 03P 04P R2 GS25 GS21	☞ Page 381 Connection to QCPU
	Q172HCPU	○	RS-232 RS-422	GT27 GT25 GT23 GT21 07W GT21 05Q GT21 04R GT21 03P 04P ET/R4 GT21 03P 04P R4 GT21 03P 04P R2 GS25 GS21 *2	☞ Page 381 Connection to QCPU
	Q173HCPU				
	Q172DCPU				
	Q173DCPU				
	Q172DCPU-S1				
	Q173DCPU-S1				
	Q172DSCPU				
	Q173DSCPU				
	Q170MCPU	○	RS-232 RS-422	GT27 GT25 GT23 GT21 07W GT21 05Q GT21 04R GT21 03P 04P ET/R4 GT21 03P 04P R4 GT21 03P 04P R2 GS25 GS21	☞ Page 418 Connection to the Motion CPU (Q170MCPU, Q170MSCPU(-S1))
	Q170MSCPU				
	Q170MSCPU-S1				
	MR-MQ100	○	RS-422	GT27 GT25 GT23 GT21 07W GT21 05Q GT21 04R GT21 03P 04P ET/R4 GT21 03P 04P R4 GT21 03P 04P R2 GS25 GS21	☞ Page 418 Connection to the Motion CPU (Q170MCPU, Q170MSCPU(-S1))

Series	Model name	Clock	Communication type	Connectable model	Refer to
Motion CPU (A Series)	A273UCPU	○	RS-422	GT27 GT25 GT23 GS25	☞ Page 388 Connection to ACPU
	A273UHCPU				
	A273UHCPU-S3				
	A373UCPU				
	A373UCPU-S3				
	A171SCPU				
	A171SCPU-S3				
	A171SCPU-S3N				
	A171SHCPU				
	A171SHCPUN				
	A172SHCPU				
	A172SHCPUN				
	A173UHCPU				
	A173UHCPU-S1				
MELSEC-WS	WS0-CPU0	×	RS-232	GT27 GT25 GT23 GT21 07W GT21 05Q GT21 04R GT21 03P 04P R4 GT21 03P 04P R2 GS25 GS21	☞ Page 417 Connection to WSCPU
	WS0-CPU1				
	WS0-CPU3				
MELSECNET/H Remote I/O station	QJ72LP25-25	×	RS-232	GT27 GT25 GT23 GS25	☞ Page 381 Connection to QCPU
	QJ72LP25G				
	QJ72BR15				
CC-Link IE Field Network head module	LJ72GF15-T2	×	-	-	-
CC-Link IE Field Network Ethernet adapter module	NZ2GF-ETB	×	-	-	-
CNC C70	Q173NCCPU	○	RS-232	GT27 GT25 GT23 GS25 *2	☞ Page 381 Connection to QCPU
Robot controller (Q Series)	CRnQ-700 (Q172DRCPU) CR750-Q (Q172DRCPU) CR751-Q (Q172DRCPU) CR800-Q (Q172DSRCPU)	○	RS-232	GT27 GT25 GT23 GT21 07W GT21 05Q GT21 04R GT21 03P 04P R4 GT21 03P 04P R2 GS25 GS21 *2	☞ Page 381 Connection to QCPU

Series	Model name	Clock	Communication type	Connectable model	Refer to
MELSEC-FX	FX0	×	RS-422	GT27 GT25 GT23 GT21 07W GT21 05Q GT21 04R GT21 03P 04P ET/R4 GT21 03P 04P R4 GS25 GS21	☞ Page 394 Connection to FXCPU
	FX0S FX0N	×	RS-422	GT27 GT25 GT23 GT21 07W GT21 05Q GT21 04R GT21 03P 04P ET/R4 GT21 03P 04P R4 GT21 03P 04P R4-5V GS25 GS21	
	FX1	×	RS-422	GT27 GT25 GT23 GT21 07W GT21 05Q GT21 04R GT21 03P 04P R4 GS25 GS21	
	FX2 FX2C	×*9	RS-422	GT27 GT25 GT23 GT21 07W GT21 05Q GT21 04R GT21 03P 04P R4 GS25 GS21	
	FX1S FX1N FX2N FX1NC	○	RS-232 RS-422	GT27 GT25 GT23 GT21 07W GT21 05Q GT21 04R GT21 03P 04P ET/R4 GT21 03P 04P R4 GT21 03P 04P R2 GT21 03P 04P R4-5V GS25 GS21	
	FX2NC	×*9			
	FX3S FX3G FX3GC FX3GE FX3U FX3UC	○			

*1 When in multiple CPU system configuration, use CPU function version B or later.
*2 Access via QCPU (RS-232) in the multiple CPU system.
*3 Use a module with the upper five digits of the serial No. later than 12042.
*4 The adapter L6ADP-R2 or L6ADP-R4 is required for the direct CPU connection (serial).
When using L6ADP-R4, use an LCPU whose upper five digits are "15102" or later.
*5 When monitoring AnNCPU or A2SCPU, only the following or later software version is used to write to the CPU.
• AnNCPU(S1) with link: Version L or later, AnNCPU(S1) without link: Version H or later
• A2SCPU: Version H or later
*6 When monitoring A0J2HCPU, A2CCPU or A2SCPU, only the following or later software version is used to write to the CPU.
• A0J2HCPU (with/without link): Version E or later
• A0J2HCPU-DC24: Version B or later
• A2CCPU, A2SCPU: Version H or later
*7 When using SV13, SV22, or SV43, use a Motion CPU with the following version of OS installed.
• SW6RN-SV13Q□: 00E or later
• SW6RN-SV22Q□: 00E or later
• SW6RN-SV43Q□: 00B or later
*8 Use main modules with the following product numbers.
• Q172CPU: Product number K******* or later
• Q173CPU: Product number J******* or later
*9 It is available by installing the real time clock function board or the EEPROM memory with the real time clock function.

5.2 System Configuration

Connection to QCPU

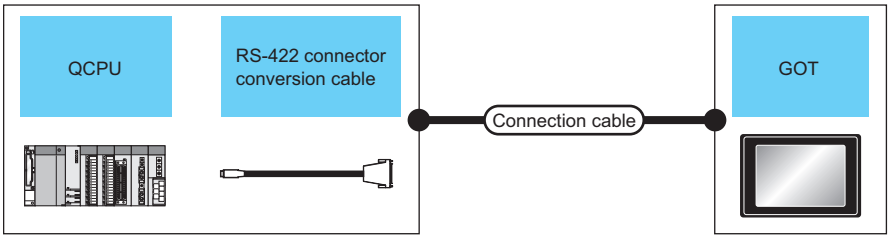

PLC			Connection cable		GOT		Number of connectable equipment
Model name	RS-422 connector conversion cable	Communication type	Cable model	Max. distance	Option device*7	Model	
MELSEC-Q	-	RS-232	GT01-C30R2-6P(3m)	3m	- (Built into GOT)	GT27 GT25 GT23 GT21 07W GT21 05Q GS25 GS21	1 GOT for 1 PLC
					GT15-RS2-9P	GT27 GT25	
					GT10-C02H-6PT9P*4	GT21 03P 04P R4 GT21 03P 04P R2	
					GT01-RS4-M*1	-	
			GT10-C30R2-6P(3m)*5	3m	- (Built into GOT)	GT21 04R GT21 03P 04P R2	

PLC			Connection cable		GOT		Number of connectable equipment
Model name	RS-422 connector conversion cable	Communication type	Cable model	Max. distance	Option device*7	Model	
MELSEC-Q	FA-CNV2402CBL(0.2m) FA-CNV2405CBL (0.5m)	RS-422	GT01-C30R4-25P(3m) GT01-C100R4-25P(10m) GT01-C200R4-25P(20m) GT01-C300R4-25P(30m)	30m	- (Built into GOT)	GT27 GT25 GT23 GT21 GS25 GS21	1 GOT for 1 PLC
					GT15-RS4-9S	GT27 GT25	
					GT10-C02H-9SC	GT21 GT2103P 04P R4	
					GT01-RS4-M*1	-	
			GT21-C30R4-25P5(3m) GT21-C100R4-25P5(10m) GT21-C200R4-25P5(20m) GT21-C300R4-25P5(30m)*3	30m	- (Built into GOT)	GT2103P 04P ET/R4 *6	
			GT10-C30R4-25P(3m) GT10-C100R4-25P(10m) GT10-C200R4-25P(20m) GT10-C300R4-25P(30m)*2	30m	- (Built into GOT)	GT21 GT2103P 04P R4	

*1 For details of the GOT multi-drop connection, refer to the following.
☞ Page 1034 GOT MULTI-DROP CONNECTION
*2 For the connection to GOT, refer to the connection diagram.
☞ Page 422 RS-422 connection diagram 2)
*3 For the connection to GOT, refer to the connection diagram.
☞ Page 423 RS-422 connection diagram 5)
*4 When a GT10-C02H-6PT9P unit of the sub version A or B is used, do not ground the case of the D-sub (9-pin) connector.
*5 For the connection to GOT, refer to the connection diagram.
☞ Page 423 RS-422 connection diagram 3)
*6 GT2104-PMBD and GT2103-PMBD do not support the direct CPU connection (serial) with the Q00JCPU, Q00CPU, or Q01CPU.
*7 GT25-W and GT2505-V do not support option devices.

Connection to LCPU

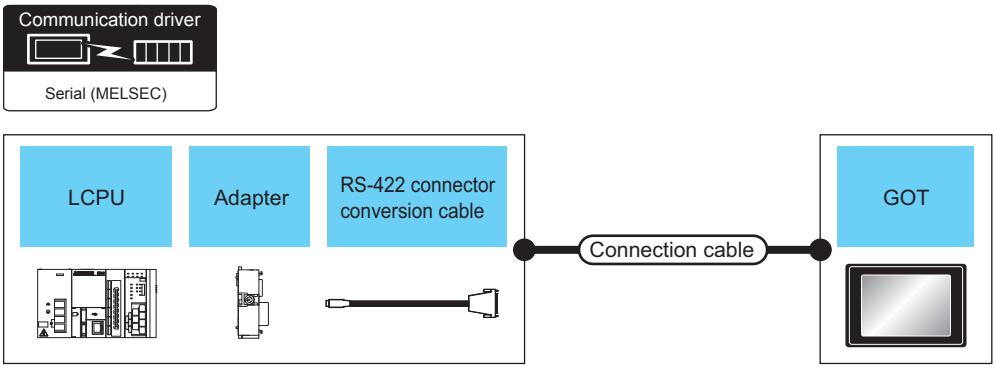

PLC				Connection cable		GOT		Number of connectable equipment
Model name	Adapter	RS-422 connector conversion cable	Communication type	Cable model	Max. distance	Option device[*6]	Model	
L02CPU L06CPU L26CPU L26CPU-BT L02CPU-P L06CPU-P L26CPU-P L26CPU-PBT	L6ADP-R2	-	RS-232	GT01-C30R2-6P(3m)	3m	- (Built into GT27 GT25 GT23 GT21(07W) GT21(05Q) GS25 GS21)	GT27 GT25 GT23 GT21(07W) GT21(05Q) GS25 GS21	1 GOT for 1 PLC
						GT15-RS2-9P	GT27 GT25	
						GT10-C02H-6PT9P[*4]	GT21(03P 04P R4) GT21(03P 04P R2)	
						GT01-RS4-M[*1]	-	
				GT10-C30R2-6P(3m)[*5]	3m	- (Built into GT27 GT25 GT23 GT21(07W) GT21(05Q) GS25 GS21)	GT21(04R) GT21(03P 04P R2)	
	L6ADP-R2	FA-CNV2402CBL(0.2m) FA-CNV2405CBL(0.5m)	RS-422	GT01-C30R4-25P(3m) GT01-C100R4-25P(10m) GT01-C200R4-25P(20m) GT01-C300R4-25P(30m)	30m	- (Built into GT27 GT25 GT23 GT21(07W) GT21(05Q) GS25 GS21)	GT27 GT25 GT23 GT21(07W) GT21(05Q) GS25 GS21	
						GT15-RS4-9S	GT27 GT25	
						GT10-C02H-9SC	GT21(04R) GT21(03P 04P R4)	
						GT01-RS4-M[*1]	-	
				GT21-C30R4-25P5(3m) GT21-C100R4-25P5(10m) GT21-C200R4-25P5(20m) GT21-C300R4-25P5(30m)[*3]	30m	- (Built into GT27 GT25 GT23 GT21(07W) GT21(05Q) GS25 GS21)	GT21(03P 04P ET/R4)	
				GT10-C30R4-25P(3m) GT10-C100R4-25P(10m) GT10-C200R4-25P(20m) GT10-C300R4-25P(30m)[*2]	30m	- (Built into GT27 GT25 GT23 GT21(07W) GT21(05Q) GS25 GS21)	GT21(04R) GT21(03P 04P R4)	

PLC				Connection cable		GOT		Number of connectable equipment
Model name	Adapter	RS-422 connector conversion cable	Communication type	Cable model	Max. distance	Option device[*6]	Model	
L02CPU L06CPU L26CPU L26CPU-BT L02SCPU L02CPU-P L06CPU-P L26CPU-P L26CPU-PBT	L6ADP-R4	-	RS-422	User preparing Page 423 RS-422 connection diagram 3)	1200 m	GT15-RS4-9S	GT27 GT25	1 GOT for 1 PLC
						GT10-C02H-9SC	GT21 04R GT21 03P 04P R4	
						- (Built into GOT)	GT27 GT25 GT23 GT21 07W GT21 05Q GS25 GS21	
						GT01-RS4-M[*1]	-	
				User preparing Page 423 RS-422 connection diagram 4)		- (Built into GOT)	GT21 04R GT21 03P 04P ET/R4 GT21 03P 04P R4	
L02SCPU L02SCPU-P	-	-	RS-232	GT01-C30R2-6P(3m)	3m	- (Built into GOT)	GT27 GT25 GT23 GT21 07W GT21 05Q GS25 GS21	
						GT15-RS2-9P	GT27 GT25	
						GT10-C02H-6PT9P[*4]	GT21 03P 04P R4 GT21 03P 04P R2	
						GT01-RS4-M[*1]	-	
				GT10-C30R2-6P(3m)[*4]	3m	- (Built into GOT)	GT21 04R GT21 03P 04P R2	

PLC				Connection cable		GOT		Number of connectable equipment
Model name	Adapter	RS-422 connector conversion cable	Communication type	Cable model	Max. distance	Option device*6	Model	
L02SCPU L02SCPU-P	-	FA-CNV2402CBL(0.2m) FA-CNV2405CBL(0.5m)	RS-422	GT01-C30R4-25P(3m) GT01-C100R4-25P(10m) GT01-C200R4-25P(20m) GT01-C300R4-25P(30m)	3m	- (Built into GOT)	GT27 GT25 GT23 GT21 GT21 GS25 GS21	1 GOT for 1 PLC
						GT15-RS4-9S	GT27 GT25	
						GT10-C02H-9SC	GT21 GT21	
						GT01-RS4-M*1	-	
				GT21-C30R4-25P5(3m) GT21-C100R4-25P5(10m) GT21-C200R4-25P5(20m) GT21-C300R4-25P5(30m)*3	30m	- (Built into GOT)	GT21 ET/R4	
				GT10-C30R4-25P(3m) GT10-C100R4-25P(10m) GT10-C200R4-25P(20m) GT10-C300R4-25P(30m)*2	30m	- (Built into GOT)	GT21 GT21	

*1 For details of the GOT multi-drop connection, refer to the following.
☞ Page 1034 GOT MULTI-DROP CONNECTION

*2 For the connection to GOT, refer to the connection diagram.
☞ Page 422 RS-422 connection diagram 2)

*3 For the connection to GOT, refer to the connection diagram.
☞ Page 423 RS-422 connection diagram 5)

*4 When a GT10-C02H-6PT9P unit of the sub version A or B is used, do not ground the case of the D-sub (9-pin) connector.

*5 For the connection to GOT, refer to the connection diagram.
☞ Page 423 RS-422 connection diagram 3)

*6 GT25-W and GT2505-V do not support option devices.

Connection to QnACPU

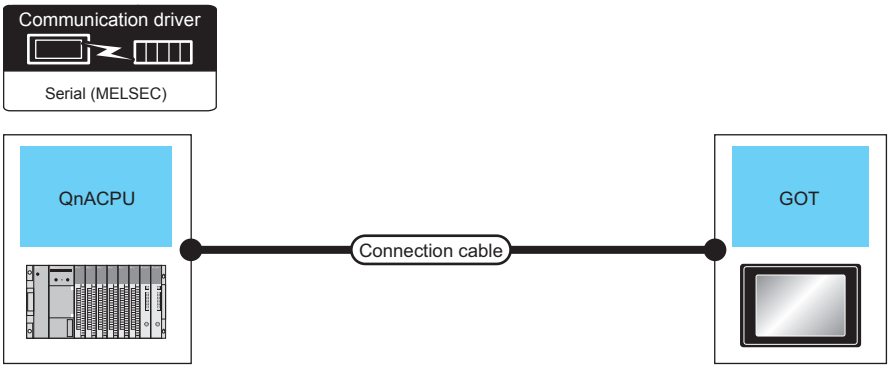

PLC		Connection cable		GOT		Number of connectable equipment
Model name	Communication type	Cable model	Max. distance	Option device*4	Model	
MELSEC-QnA	RS-422	GT01-C30R4-25P(3m) GT01-C100R4-25P(10m) GT01-C200R4-25P(20m) GT01-C300R4-25P(30m)	30m	- (Built into GOT)	GT27 GT25 GT23 GT21 07W GT21 05Q GS25 GS21	1 GOT for 1 PLC
				GT15-RS4-9S	GT27 GT25	
				GT10-C02H-9SC	GT21 04R GT21 03P 04P R4	
				GT01-RS4-M*1	-	
		GT21-C30R4-25P5(3m) GT21-C100R4-25P5(10m) GT21-C200R4-25P5(20m) GT21-C300R4-25P5(30m)*3	30m	- (Built into GOT)	GT21 03P 04P BT/R4	
		GT10-C30R4-25P(3m) GT10-C100R4-25P(10m) GT10-C200R4-25P(20m) GT10-C300R4-25P(30m)*2	30m	- (Built into GOT)	GT21 04R GT21 03P 04P R4	

*1 For details of the GOT multi-drop connection, refer to the following.
☞ Page 1034 GOT MULTI-DROP CONNECTION

*2 For the connection to GOT, refer to the connection diagram.
☞ Page 422 RS-422 connection diagram 2)

*3 For the connection to GOT, refer to the connection diagram.
☞ Page 423 RS-422 connection diagram 5)

*4 GT25-W and GT2505-V do not support option devices.

Connection to ACPU

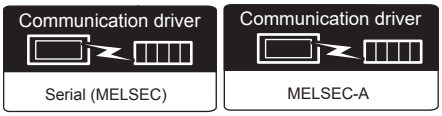

(For GT21 and GS21)

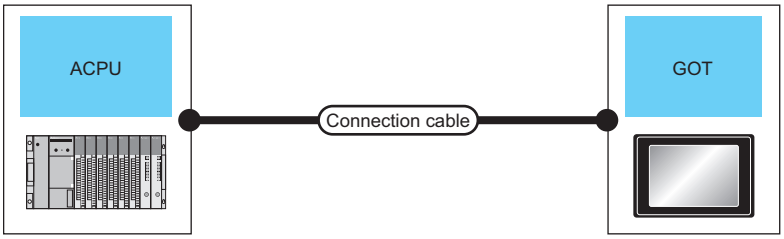

PLC		Connection cable		GOT		Number of connectable equipment
Model name	**Communication type**	**Cable model**	**Max. distance**	**Option device*3**	**Model**	
MELSEC-A	RS-422	GT01-C30R4-25P(3m) GT01-C100R4-25P(10m) GT01-C200R4-25P(20m) GT01-C300R4-25P(30m)	30m	- (Built into GT)	GT27 GT25 GT23 GT21 07W GT21 05Q GS25 GS21	1 GOT for 1 PLC
				GT15-RS4-9S	GT27 GT25	
				GT10-C02H-9SC	GT21 04R GT21 03P 04P R4	
				GT01-RS4-M*1	-	
		GT10-C30R4-25P(3m) GT10-C100R4-25P(10m) GT10-C200R4-25P(20m) GT10-C300R4-25P(30m)*2	30m	- (Built into GT)	GT21 04R GT21 03P 04P R4	
Motion CPU (A Series)	RS-422	GT01-C30R4-25P(3m) GT01-C100R4-25P(10m) GT01-C200R4-25P(20m) GT01-C300R4-25P(30m)	30m	- (Built into GT)	GT27 GT25 GT23 GS25	
				GT15-RS4-9S	GT27 GT25	

*1 For details of the GOT multi-drop connection, refer to the following.
☞ Page 1034 GOT MULTI-DROP CONNECTION

*2 For the connection to GOT, refer to the connection diagram.
☞ Page 422 RS-422 connection diagram 2)

*3 GT25-W and GT2505-V do not support option devices.

Connection to MELSEC iQ-F Series

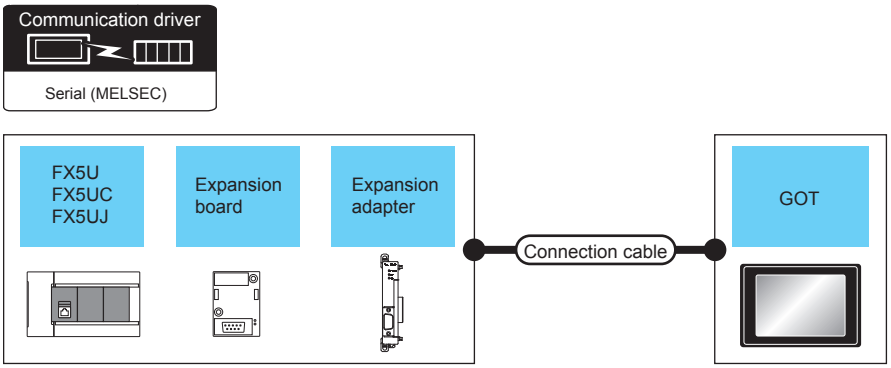

☞ Page 389 When connecting via RS-232 communication
☞ Page 391 When connecting via RS-422 communication

When connecting via RS-232 communication

PLC				Connection cable		GOT		Number of connectable equipment*2
Model name	Expansion board	Expansion adapter	Communication type	Cable model Connection diagram number	Max. distance	Option device*4	Model	
FX5U FX5UJ FX5S	FX5-232-BD	-	RS-232	GT01-C30R2-9S(3m) or User preparing Page 420 RS-232 connection diagram 1)	15m	- (Built into GOT)	GT27 GT25 GT23 GT21 07W GT21 05Q GS25 GS21	1 GOT for 1 Expansion board
						GT15-RS2-9P	GT27 GT25	
						GT10-C02H-6PT9P*3	GT21 03P 04P R4 GT21 03P 04P R2	
						GT01-RS4-M*1	-	
				User preparing Page 421 RS-232 connection diagram 4)	15m	- (Built into GOT)	GT21 04R GT21 03P 04P R2	

PLC				Connection cable		GOT		Number of connectable equipment*2
Model name	Expansion board	Expansion adapter	Communication type	Cable model Connection diagram number	Max. distance	Option device*4	Model	
FX5U FX5UC FX5UJ FX5S	-	FX5-232ADP	RS-232	GT01-C30R2-9S(3m) or User preparing Page 420 RS-232 connection diagram 1)	15m	- (Built into GOT)	GT27 GT25 GT23 GT21 07W GT21 05Q GS25 GS21	1 GOT for 1 Expansion adapter
						GT15-RS2-9P	GT27 GT25	
						GT10-C02H-6PT9P*3	GT21 03P 04P R4 GT21 03P 04P R2	
						GT01-RS4-M*1	-	
				User preparing Page 421 RS-232 connection diagram 4)	15m	- (Built into GOT)	GT21 04R GT21 03P 04P R2	

*1 For details of the GOT multi-drop connection, refer to the following.
☞ Page 1034 GOT MULTI-DROP CONNECTION

*2 When the expansion board (communication board) and the expansion adapter are connected, a GOT and a peripheral such as a PC with GX Works3 installed can be connected to them individually.

*3 When a GT10-C02H-6PT9P unit of the sub version A or B is used, do not ground the case of the D-sub (9-pin) connector.

*4 GT25-W and GT2505-V do not support option devices.

When connecting via RS-422 communication

PLC				Connection cable		GOT		Number of connectable equipment[*2]
Model name	Expansion board	Expansion adapter	Communication type	Cable model Connection diagram number	Max. distance	Option device[*5]	Model	
FX5U FX5UJ FX5S	FX5-422-BD-GOT	-	RS-422	GT01-C10R4-8P(1m) GT01-C30R4-8P(3m) GT01-C100R4-8P(10m) GT01-C200R4-8P(20m) GT01-C300R4-8P(30m)	30m	- (Built into GOT)	GT27 GT25 GT23 GT21 07W GT21 05Q GS25 GS21	1 GOT for 1 Expansion board
						GT15-RS4-9S	GT27 GT25	
						GT10-C02H-9SC	GT21 04R GT21 03P 04P R4	
						GT01-RS4-M[*1]	-	
				GT21-C10R4-8P5(1m) GT21-C30R4-8P5(3m) GT21-C100R4-8P5(10m) GT21-C200R4-8P5(20m) GT21-C300R4-8P5(30m)[*4]	30m	- (Built into GOT)	GT21 03P 04P ET/R4	
				GT10-C10R4-8P(1m) GT10-C30R4-8P(3m) GT10-C100R4-8P(10m) GT10-C200R4-8P(20m) GT10-C300R4-8P(30m) GT10-C10R4-8PC(1m) GT10-C30R4-8PC(3m) GT10-C100R4-8PC(10m) GT10-C200R4-8PC(20m) GT10-C300R4-8PC(30m)[*3]	30m	- (Built into GOT)	GT21 04R GT21 03P 04P R4	
				GT10-C10R4-8P(1m) GT10-C30R4-8P(3m) GT10-C10R4-8PC(1m) GT10-C30R4-8PC(3m)[*3]	3m	- (Built into GOT)	GT21 03P 04P R4-5V	

5

PLC				Connection cable		GOT		Number of connectable equipment*2
Model name	Expansion board	Expansion adapter	Communication type	Cable model Connection diagram number	Max. distance	Option device*5	Model	
FX5U FX5UC	-	-	RS-422 *6	User preparing Page 424 RS-422 connection diagram 7)	30m	- (Built into GOT)	GT27 GT25 GT23 GT21(07W) GT21(05Q) GS25 GS21	1 GOT for 1 PLC built-in port
						GT15-RS4-9S	GT27 GT25	
						GT10-C02H-9SC	GT21(04R) GT21(03P 04P R4)	
				User preparing Page 424 RS-422 connection diagram 8)		- (Built into GOT)	GT21(04R) GT21(03P 04P ET/R4) GT21(03P 04P R4)	
FX5U FX5UJ FX5S	FX5-485-BD	-	RS-422 *6	User preparing Page 424 RS-422 connection diagram 7)	30m	- (Built into GOT)	GT27 GT25 GT23 GT21(07W) GT21(05Q) GS25 GS21	1 GOT for 1 Expansion board
						GT15-RS4-9S	GT27 GT25	
						GT10-C02H-9SC	GT21(04R) GT21(03P 04P R4)	
				User preparing Page 424 RS-422 connection diagram 8)		- (Built into GOT)	GT21(04R) GT21(03P 04P ET/R4) GT21(03P 04P R4)	
FX5U FX5UC FX5UJ FX5S	-	FX5-485ADP	RS-422 *6	User preparing Page 424 RS-422 connection diagram 7)	30m	- (Built into GOT)	GT27 GT25 GT23 GT21(07W) GT21(05Q) GS25 GS21	1 GOT for 1 Expansion adapter
						GT15-RS4-9S	GT27 GT25	
						GT10-C02H-9SC	GT21(04R) GT21(03P 04P R4)	
				User preparing Page 424 RS-422 connection diagram 8)		- (Built into GOT)	GT21(04R) GT21(03P 04P ET/R4) GT21(03P 04P R4)	

*1 For details of the GOT multi-drop connection, refer to the following.
☞ Page 1034 GOT MULTI-DROP CONNECTION
*2 When the expansion board (communication board) and the expansion adapter are connected, a GOT and a peripheral such as a PC with GX Works3 installed can be connected to them individually.
*3 For the connection to GOT, refer to the connection diagram.
☞ Page 422 RS-422 connection diagram 1)
*4 For the connection to GOT, refer to the connection diagram.
☞ Page 423 RS-422 connection diagram 6)
*5 GT25-W and GT2505-V do not support option devices.
*6 Use the RS-485 communication terminal block of the PLC to perform RS-422 communications.

Connection to FXCPU

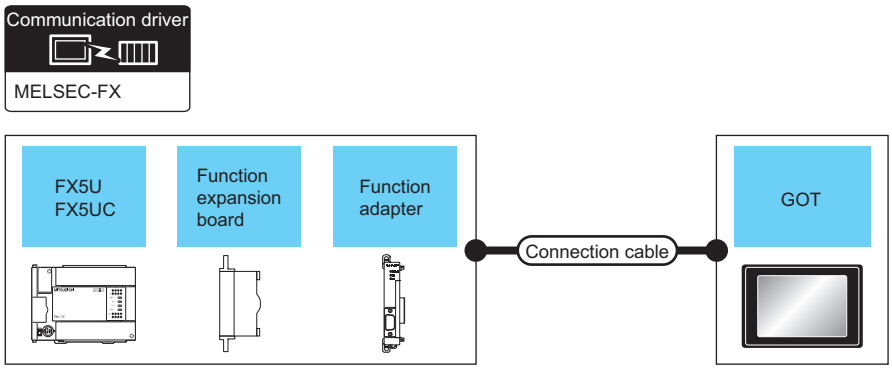

☞ Page 395 When connecting to a PLC directly
☞ Page 402 When using the function extension board
☞ Page 409 When using the special adapter
☞ Page 414 When using the function extension board and special adapter

When connecting to a PLC directly

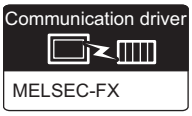

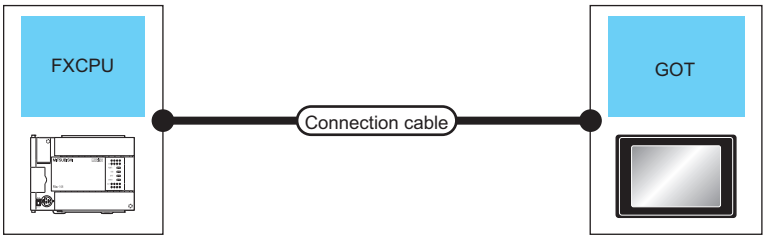

☞ Page 395 FX0, FX0S, FX0N, FX1, FX2, FX2C
☞ Page 397 FX1S, FX1N, FX2N, FX1NC, FX2NC
☞ Page 398 FX3G, FX3S, FX3GE
☞ Page 399 FX3GC (FX3GC-□□/D, FX3GC-□□/DSS)
☞ Page 400 FX3U, FX3UC (FX3UC-□□-LT(-2))
☞ Page 401 FX3UC (FX3UC-□□/D, FX3UC-□□/DS, FX3UC-□□/DSS)

■FX0, FX0S, FX0N, FX1, FX2, FX2C

PLC		Connection cable		GOT		Number of connectable equipment
Model name	Communication type	Cable model	Max. distance	Option device *5	Model	
FX0 FX0S FX0N	RS-422	GT01-C10R4-8P(1m) GT01-C30R4-8P(3m) GT01-C100R4-8P(10m) GT01-C200R4-8P(20m) GT01-C300R4-8P(30m)	30m	- (Built into GOT)	GT27 GT25 GT23 GT21 07W GT21 05Q GS25 GS21	1 GOT for 1 PLC
				GT15-RS4-9S	GT27 GT25	
				GT10-C02H-9SC	GT21 04R GT21 03P 04P R4	
				GT01-RS4-M *1	-	
FX0 FX0S FX0N	RS-422	GT21-C10R4-8P5(1m) GT21-C30R4-8P5(3m) GT21-C100R4-8P5(10m) GT21-C200R4-8P5(20m) GT21-C300R4-8P5(30m) *4	30m	- (Built into GOT)	GT21 03P 04P ET/R4	1 GOT for 1 PLC
		GT10-C10R4-8P(1m) GT10-C30R4-8P(3m) GT10-C100R4-8P(10m) GT10-C200R4-8P(20m) GT10-C300R4-8P(30m) GT10-C10R4-8PC(1m) GT10-C30R4-8PC(3m) GT10-C100R4-8PC(10m) GT10-C200R4-8PC(20m) GT10-C300R4-8PC(30m) GT10-C10R4-8PL(1m) *2	30m	- (Built into GOT)	GT21 04R GT21 03P 04P R4	
FX0S FX0N	RS-422	GT10-C10R4-8P(1m) GT10-C30R4-8P(3m) GT10-C10R4-8PC(1m) GT10-C30R4-8PC(3m) GT10-C10R4-8PL(1m) *2	3m	- (Built into GOT)	GT21 03P 04P R4-9V	

PLC		Connection cable		GOT		Number of connectable equipment
Model name	Communication type	Cable model	Max. distance	Option device *5	Model	
FX1 FX2 FX2C	RS-422	GT01-C30R4-25P(3m) GT01-C100R4-25P(10m) GT01-C200R4-25P(20m) GT01-C300R4-25P(30m)	30m	- (Built into GOT)	GT27 GT25 GT23 GT21 07W GT21 05Q GS25 GS21	1 GOT for 1 PLC
				GT15-RS4-9S	GT27 GT25	
				GT10-C02H-9SC	GT21 04R GT21 03P 04P R4	
				GT01-RS4-M *1	-	
		GT10-C30R4-25P(3m) GT10-C100R4-25P(10m) GT10-C200R4-25P(20m) GT10-C300R4-25P(30m) *3	30m	- (Built into GOT)	GT21 04R GT21 03P 04P R4	

*1 For details of the GOT multi-drop connection, refer to the following.
☞ Page 1034 GOT MULTI-DROP CONNECTION

*2 For the connection to GOT, refer to the connection diagram.
☞ Page 422 RS-422 connection diagram 1)

*3 For the connection to GOT, refer to the connection diagram.
☞ Page 422 RS-422 connection diagram 2)

*4 For the connection to GOT, refer to the connection diagram.
☞ Page 423 RS-422 connection diagram 6)

*5 GT25-W and GT2505-V do not support option devices.

■FX1S, FX1N, FX2N, FX1NC, FX2NC

PLC		Connection cable		GOT		Number of connectable equipment
Model name	Communication type	Cable model	Max. distance	Option device *6	Model	
FX1S FX1N FX2N FX1NC FX2NC	RS-422	GT01-C10R4-8P(1m) GT01-C30R4-8P(3m) GT01-C100R4-8P(10m) GT01-C200R4-8P(20m) GT01-C300R4-8P(30m)	30m	- (Built into GOT)	GT27 GT25 GT23 GT21 07W GT21 05Q GS25 GS21	1 GOT for 1 PLC built-in port
				GT15-RS4-9S	GT27 GT25	
				GT10-C02H-9SC	GT21 04R GT21 03P 04P R4	
				GT01-RS4-M *1	-	
		GT21-C10R4-8P5(1m) GT21-C30R4-8P5(3m) GT21-C100R4-8P5(10m) GT21-C200R4-8P5(20m) GT21-C300R4-8P5(30m) *4	30m	- (Built into GOT)	GT21 03P 04P ET/R4	
		GT10-C10R4-8P(1m) GT10-C30R4-8P(3m) GT10-C100R4-8P(10m) GT10-C200R4-8P(20m) GT10-C300R4-8P(30m) GT10-C10R4-8PC(1m) GT10-C30R4-8PC(3m) GT10-C100R4-8PC(10m) GT10-C200R4-8PC(20m) GT10-C300R4-8PC(30m) GT10-C10R4-8PL(1m) *2*3	30m	- (Built into GOT)	GT21 04R GT21 03P 04P R4	
		GT10-C10R4-8P(1m) GT10-C30R4-8P(3m) GT10-C10R4-8PC(1m) GT10-C30R4-8PC(3m) GT10-C10R4-8PL(1m) *2*3	3m	- (Built into GOT)	GT21 03P 04P R4-5V *5	

*1 For details of the GOT multi-drop connection, refer to the following.
☞ Page 1034 GOT MULTI-DROP CONNECTION

*2 GT10-C10R4-8PL(1m) can be available for FX1S, FX1N and FX2N.

*3 For the connection to GOT, refer to the connection diagram.
☞ Page 422 RS-422 connection diagram 1)

*4 For the connection to GOT, refer to the connection diagram.
☞ Page 423 RS-422 connection diagram 6)

*5 The number of connectable GT2104-PMBLS or GT2103-PMBLS units differs depending on the PLC type.
<For FX1S, FX1N, FX1NC, and FX2NC>
Even though function extension boards (FX□□-422-BD) are used to add RS-422 ports, two GT2104-PMBLS or GT2103-PMBLS units cannot be connected simultaneously.
<For FX2N>
The current consumption must be added.
Two GT2104-PMBLS or GT2103-PMBL units may not be connected simultaneously depending on the calculation result of the current consumption.
For details on calculating the current consumption of a PLC main unit, refer to the following manual.
📖FX Series User's Manuals - Hardware Edition

*6 GT25-W and GT2505-V do not support option devices.

■FX3G, FX3S, FX3GE

PLC		Connection cable		GOT		Number of connectable equipment
Model name	Communication type	Cable model	Max. distance	Option device *5	Model	
FX3G FX3S FX3GE	RS-422	GT01-C10R4-8P(1m) GT01-C30R4-8P(3m) GT01-C100R4-8P(10m) GT01-C200R4-8P(20m) GT01-C300R4-8P(30m)	30m	- (Built into GOT)	GT27 GT25 GT23 GT21 07W GT21 05Q GS25 GS21	1 GOT for 1 PLC built-in port
				GT15-RS4-9S	GT27 GT25	
				GT10-C02H-9SC	GT21 04R GT2 03P 04P R4	
				GT01-RS4-M *1	-	
		GT21-C10R4-8P5(1m) GT21-C30R4-8P5(3m) GT21-C100R4-8P5(10m) GT21-C200R4-8P5(20m) GT21-C300R4-8P5(30m) *3	30m	- (Built into GOT)	GT2 03P 04P ET/R4	
		GT10-C10R4-8P(1m) GT10-C30R4-8P(3m) GT10-C100R4-8P(10m) GT10-C200R4-8P(20m) GT10-C300R4-8P(30m) GT10-C10R4-8PC(1m) GT10-C30R4-8PC(3m) GT10-C100R4-8PC(10m) GT10-C200R4-8PC(20m) GT10-C300R4-8PC(30m) *2	30m	- (Built into GOT)	GT21 04R GT2 03P 04P R4	
		GT10-C10R4-8P(1m) GT10-C30R4-8P(3m) GT10-C10R4-8PC(1m) GT10-C30R4-8PC(3m) *2	3m	- (Built into GOT)	GT2 03P 04P R4-5V *4	

*1 For details of the GOT multi-drop connection, refer to the following.
☞ Page 1034 GOT MULTI-DROP CONNECTION

*2 For the connection to GOT, refer to the connection diagram.
☞ Page 422 RS-422 connection diagram 1)

*3 For the connection to GOT, refer to the connection diagram.
☞ Page 423 RS-422 connection diagram 6)

*4 Even though function extension boards (FX□□-422-BD) are used to add RS-422 ports, two GT2104-PMBLS or GT2103-PMBLS units cannot be connected simultaneously.

*5 GT25-W and GT2505-V do not support option devices.

■FX3GC (FX3GC-□□/D, FX3GC-□□/DSS)

PLC		Connection cable		GOT		Number of connectable equipment
Model name	Communication type	Cable model	Max. distance	Option device *5	Model	
FX3GC-□□/D FX3GC-□□/DSS	RS-422	GT01-C10R4-8P(1m) GT01-C30R4-8P(3m) GT01-C100R4-8P(10m) GT01-C200R4-8P(20m) GT01-C300R4-8P(30m)	30m	- (Built into GOT)	GT27 GT25 GT23 GT21 07W GT21 05Q GS25 GS21	1 GOT for 1 PLC built-in port
				GT15-RS4-9S	GT27 GT25	
				GT10-C02H-9SC	GT21 04R GT21 03P 04P R4	
				GT01-RS4-M *1	-	
		GT21-C10R4-8P5(1m) GT21-C30R4-8P5(3m) GT21-C100R4-8P5(10m) GT21-C200R4-8P5(20m) GT21-C300R4-8P5(30m) *3	30m	- (Built into GOT)	GT21 03P 04P ET/R4	
		GT10-C10R4-8P(1m) GT10-C30R4-8P(3m) GT10-C100R4-8P(10m) GT10-C200R4-8P(20m) GT10-C300R4-8P(30m) GT10-C10R4-8PC(1m) GT10-C30R4-8PC(3m) GT10-C100R4-8PC(10m) GT10-C200R4-8PC(20m) GT10-C300R4-8PC(30m) *2	30m	- (Built into GOT)	GT21 04R GT21 03P 04P R4	
		GT10-C10R4-8P(1m) GT10-C30R4-8P(3m) GT10-C10R4-8PC(1m) GT10-C30R4-8PC(3m) *2	3m	- (Built into GOT)	GT21 03P 04P R4-5V *4	

*1 For details of the GOT multi-drop connection, refer to the following.
☞ Page 1034 GOT MULTI-DROP CONNECTION

*2 For the connection to GOT, refer to the connection diagram.
☞ Page 422 RS-422 connection diagram 1)

*3 For the connection to GOT, refer to the connection diagram.
☞ Page 423 RS-422 connection diagram 6)

*4 Even though function extension boards (FX□□-422-BD) are used to add RS-422 ports, two GT2104-PMBLS or GT2103-PMBLS units cannot be connected simultaneously.

*5 GT25-W and GT2505-V do not support option devices.

■FX3U, FX3UC (FX3UC-□□-LT(-2))

PLC		Connection cable		GOT		Number of connectable equipment
Model name	Communication type	Cable model	Max. distance	Option device *5	Model	
FX3U FX3UC (FX3UC-□□-LT(-2))	RS-422	GT01-C10R4-8P(1m) GT01-C30R4-8P(3m) GT01-C100R4-8P(10m) GT01-C200R4-8P(20m) GT01-C300R4-8P(30m)	30m	- (Built into GOT)	GT27 GT25 GT23 GT21 07W GT21 05Q GS25 GS21	1 GOT for 1 PLC built-in port
				GT15-RS4-9S	GT27 GT25	
				GT10-C02H-9SC	GT21 04R GT21 03P 04P R4	
				GT01-RS4-M *1	-	
		GT21-C10R4-8P5(1m) GT21-C30R4-8P5(3m) GT21-C100R4-8P5(10m) GT21-C200R4-8P5(20m) GT21-C300R4-8P5(30m) *4	30m	- (Built into GOT)	GT21 03P 04P ET/R4	
		GT10-C10R4-8P(1m) GT10-C30R4-8P(3m) GT10-C100R4-8P(10m) GT10-C200R4-8P(20m) GT10-C300R4-8P(30m) GT10-C10R4-8PC(1m) GT10-C30R4-8PC(3m) GT10-C100R4-8PC(10m) GT10-C200R4-8PC(20m) GT10-C300R4-8PC(30m) GT10-C10R4-8PL(1m) *2*3	30m	- (Built into GOT)	GT21 04R GT21 03P 04P R4	
		GT10-C10R4-8P(1m) GT10-C30R4-8P(3m) GT10-C10R4-8PC(1m) GT10-C30R4-8PC(3m) GT10-C10R4-8PL(1m) *3	3m	- (Built into GOT)	GT21 03P 04P R4-5V	

*1 For details of the GOT multi-drop connection, refer to the following.
☞ Page 1034 GOT MULTI-DROP CONNECTION
*2 GT10-C10R4-8PL can be used for FX3U or FX3UC-□□-LT(-2).
*3 For the connection to GOT, refer to the connection diagram.
☞ Page 422 RS-422 connection diagram 1)
*4 For the connection to GOT, refer to the connection diagram.
☞ Page 423 RS-422 connection diagram 6)
*5 GT25-W and GT2505-V do not support option devices.

■FX3UC (FX3UC-□□/D, FX3UC-□□/DS, FX3UC-□□/DSS)

PLC		Connection cable		GOT		Number of connectable equipment
Model name	Communication type	Cable model	Max. distance	Option device*5	Model	
FX3UC-□□/D FX3UC-□□/DS FX3UC-□□/DSS	RS-422	GT01-C10R4-8P(1m) GT01-C30R4-8P(3m) GT01-C100R4-8P(10m) GT01-C200R4-8P(20m) GT01-C300R4-8P(30m)	30m	- (Built into GOT)	GT27 GT25 GT23 GT21 07W GT21 05Q GS25 GS21	1 GOT for 1 PLC built-in port
				GT15-RS4-9S	GT27 GT25	
				GT10-C02H-9SC	GT21 04R GT21 03P 04P R4	
				GT01-RS4-M*1	-	
		GT21-C10R4-8P5(1m) GT21-C30R4-8P5(3m) GT21-C100R4-8P5(10m) GT21-C200R4-8P5(20m) GT21-C300R4-8P5(30m) *3	30m	- (Built into GOT)	GT21 03P 04P ET/R4	
		GT10-C10R4-8P(1m) GT10-C30R4-8P(3m) GT10-C100R4-8P(10m) GT10-C200R4-8P(20m) GT10-C300R4-8P(30m) GT10-C10R4-8PC(1m) GT10-C30R4-8PC(3m) GT10-C100R4-8PC(10m) GT10-C200R4-8PC(20m) GT10-C300R4-8PC(30m) *2	30m	- (Built into GOT)	GT21 04R GT21 03P 04P R4	
		GT10-C10R4-8P(1m) GT10-C30R4-8P(3m) GT10-C10R4-8PC(1m) GT10-C30R4-8PC(3m) *2	3m	- (Built into GOT)	GT21 03P 04P R4-5V *4	

*1 For details of the GOT multi-drop connection, refer to the following.
☞ Page 1034 GOT MULTI-DROP CONNECTION

*2 For the connection to GOT, refer to the connection diagram.
☞ Page 422 RS-422 connection diagram 1)

*3 For the connection to GOT, refer to the connection diagram.
☞ Page 423 RS-422 connection diagram 6)

*4 When the GOT is connected via a function expansion board (FX□□-422-BD), add the current consumption of the GOT to the calculation of the current consumption of the 5 V DC power supply built in the PLC main module. For details on the calculation of current consumption of a PLC main module, refer to the following manual.
📖FX SERIES USER'S MANUAL - Hardware Edition

*5 GT25-W and GT2505-V do not support option devices.

When using the function extension board

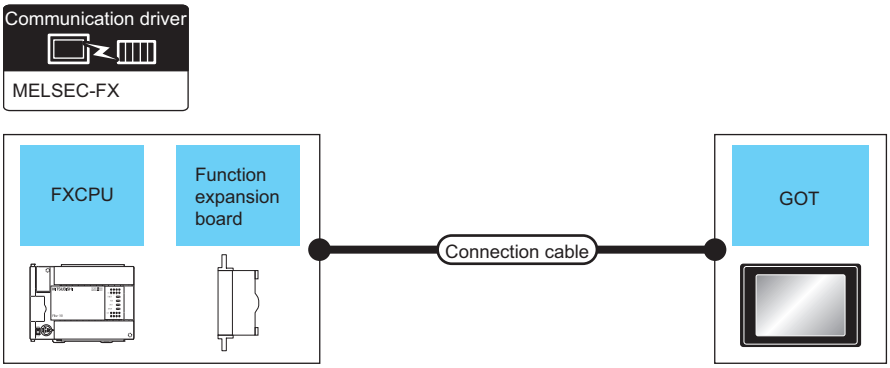

☞ Page 402 FX1S, FX1N, FX2N
☞ Page 405 FX3G, FX3S, FX3GE
☞ Page 407 FX3U, FX3UC (FX3UC-□□-LT(-2))

■FX1S, FX1N, FX2N

PLC			Connection cable		GOT		Number of connectable equipment
Model name	Function expansion board *1*3	Communication type	Cable model Connection diagram number	Max. distance	Option device *5	Model	
FX1S FX1N FX2N	FX1N-232-BD FX2N-232-BD	RS-232	GT01-C30R2-9S(3m) or User preparing Page 420 RS-232 connection diagram 1)	15m	- (Built into GOT)	GT27 GT25 GT23 GT21 07W GT21 05Q GS25 GS21	1 GOT for 1 function expansion board
					GT15-RS2-9P	GT27 GT25	
					GT10-C02H-6PT9P *4	GT21 03P 04P R4 GT21 03P 04P R2	
					GT01-RS4-M *2	-	
			User preparing Page 421 RS-232 connection diagram 4)	15m	- (Built into GOT)	GT21 04R GT21 03P 04P R2	

PLC			Connection cable		GOT		Number of connectable equipment
Model name	Function expansion board *1*3	Communication type	Cable model Connection diagram number	Max. distance	Option device *5	Model	
FX1S FX1N FX2N	FX1N-422-BD FX2N-422-BD	RS-422	GT01-C10R4-8P(1m) GT01-C30R4-8P(3m) GT01-C100R4-8P(10m) GT01-C200R4-8P(20m) GT01-C300R4-8P(30m)	30m	- (Built into GOT)	GT27 GT25 GT23 GT21 07W GT21 05Q GS25 GS21	1 GOT for 1 function expansion board
					GT15-RS4-9S	GT27 GT25	
					GT10-C02H-9SC	GT21 04R GT21 03P 04P R4	
					GT01-RS4-M *2	-	
			GT21-C10R4-8P5(1m) GT21-C30R4-8P5(3m) GT21-C100R4-8P5(10m) GT21-C200R4-8P5(20m) GT21-C300R4-8P5(30m) *6	30m	- (Built into GOT)	GT21 03P 04P ET/R4	
			GT10-C10R4-8P(1m) GT10-C30R4-8P(3m) GT10-C100R4-8P(10m) GT10-C200R4-8P(20m) GT10-C300R4-8P(30m) GT10-C10R4-8PC(1m) GT10-C30R4-8PC(3m) GT10-C100R4-8PC(10m) GT10-C200R4-8PC(20m) GT10-C300R4-8PC(30m) GT10-C10R4-8PL(1m) *5	30m	- (Built into GOT)	GT21 04R GT21 03P 04P R4	
			GT10-C10R4-8P(1m) GT10-C30R4-8P(3m) GT10-C10R4-8PC(1m) GT10-C30R4-8PC(3m) GT10-C10R4-8PL(1m) *5	3m	- (Built into GOT)	GT21 03P 04P R4-8V *7	

*1 The function expansion board to be used differs according to the type of the FXCPU to be connected.
Use the applicable function expansion board shown in the following table.

Item	Function expansion board to be used	
	When connecting to FX1N or FX1S Series	When connecting to FX Series
RS-232 communication	FX1N-232-BD	FX2N-232-BD
RS-422 communication	FX1N-422-BD	FX2N-422-BD

*2 For details of the GOT multi-drop connection, refer to the following.
☞ Page 1034 GOT MULTI-DROP CONNECTION

*3 When using function expansion boards or function adapters, confirm the communication settings.
☞ Page 436 When connecting with function extension board or communication special adapter

*4 When a GT10-C02H-6PT9P unit of the sub version A or B is used, do not ground the case of the D-sub (9-pin) connector.

*5 For the connection to GOT, refer to the connection diagram.
☞ Page 422 RS-422 connection diagram 1)

*6 For the connection to GOT, refer to the connection diagram.
☞ Page 423 RS-422 connection diagram 6)

*7 The number of connectable GT2104-PMBLS or GT2103-PMBLS units differs depending on the PLC type.
<For FX1S and FX1N>
Even though function extension boards (FX□□-422-BD) are used to add RS-422 ports, two GT2104-PMBLS or GT2103-PMBLS units cannot be connected simultaneously.
<For FX2N>
The current consumption must be added.
Two GT2104-PMBLS or GT2103-PMBL units may not be connected simultaneously depending on the calculation result of the current consumption.
For details on calculating the current consumption of a PLC main unit, refer to the following manual.
📖FX Series User's Manuals - Hardware Edition

*8 GT25-W and GT2505-V do not support option devices.

■FX3G, FX3S, FX3GE

PLC			Connection cable		GOT		Number of connectable equipment *2
Model name	Function expansion board *3	Communication type	Cable model	Max. distance	Option device *7	Model	
FX3G FX3S FX3GE	FX3G-232-BD	RS-232	GT01-C30R2-9S(3m) or User preparing Page 420 RS-232 connection diagram 1)	15m	- (Built into GOT)	GT27 GT25 GT23 GT21 07W GT21 05Q GS25 GS21	1 GOT for 1 function expansion board
					GT15-RS2-9P	GT27 GT25	
					GT10-C02H-6PT9P *8	GT21 03P 04P R4 GT21 03P 04P R2	
					GT01-RS4-M *1	-	
			User preparing Page 421 RS-232 connection diagram 4)	15m	- (Built into GOT)	GT21 04R GT21 03P 04P R2	
FX3G FX3S FX3GE	FX3G-422-BD	RS-422	GT01-C10R4-8P(1m) GT01-C30R4-8P(3m) GT01-C100R4-8P(10m) GT01-C200R4-8P(20m) GT01-C300R4-8P(30m)	30m	- (Built into GOT)	GT27 GT25 GT23 GT21 07W GT21 05Q GS25 GS21	1 GOT for 1 function expansion board
					GT15-RS4-9S	GT27 GT25	
					GT10-C02H-9SC	GT21 04R GT21 03P 04P R4	
					GT01-RS4-M *1	-	
			GT21-C10R4-8P5(1m) GT21-C30R4-8P5(3m) GT21-C100R4-8P5(10m) GT21-C200R4-8P5(20m) GT21-C300R4-8P5(30m) *5	30m	- (Built into GOT)	GT21 03P 04P ET/R4	
			GT10-C10R4-8P(1m) GT10-C30R4-8P(3m) GT10-C100R4-8P(10m) GT10-C200R4-8P(20m) GT10-C300R4-8P(30m) GT10-C10R4-8PC(1m) GT10-C30R4-8PC(3m) GT10-C100R4-8PC(10m) GT10-C200R4-8PC(20m) GT10-C300R4-8PC(30m) *4	30m	- (Built into GOT)	GT21 04R GT21 03P 04P R4	
			GT10-C10R4-8P(1m) GT10-C30R4-8P(3m) GT10-C10R4-8PC(1m) GT10-C30R4-8PC(3m) *4	3m	- (Built into GOT)	GT21 03P 04P R4-5V *6	

*1 For details of the GOT multi-drop connection, refer to the following.
☞ Page 1034 GOT MULTI-DROP CONNECTION
*2 When the function expansion board (communication board) and the function adapter are connected, a GOT and a peripheral such as a PC with GX Developer installed can be connected to them individually.
*3 When using function expansion boards or function adapters, confirm the communication settings.
☞ Page 436 When connecting with function extension board or communication special adapter
*4 For the connection to GOT, refer to the connection diagram.
☞ Page 422 RS-422 connection diagram 1)
*5 For the connection to GOT, refer to the connection diagram.
☞ Page 423 RS-422 connection diagram 6)
*6 Even though function expansion boards (FX□□-422-BD) are used to add RS-422 ports, two units of GT2104-PMBLS, GT2103-PMBLS cannot be connected at the same time.
*7 GT25-W and GT2505-V do not support option devices.
*8 When a GT10-C02H-6PT9P unit of the sub version A or B is used, do not ground the case of the D-sub (9-pin) connector.

■FX3U, FX3UC (FX3UC-□□-LT(-2))

PLC			Connection cable		GOT		Number of connectable equipment *2
Model name	Function expansion board *3	Communication type	Cable model Connection diagram number	Max. distance	Option device *8	Model	
FX3U FX3UC (FX3UC-□□-LT(-2))	FX3U-232-BD	RS-232	GT01-C30R2-9S(3m) or User preparing Page 420 RS-232 connection diagram 1)	15m	- (Built into GOT)	GT27 GT25 GT23 GT21 07W GT21 05Q GS25 GS21	1 GOT for 1 function expansion board
					GT15-RS2-9P	GT27 GT25	
					GT10-C02H-6PT9P *7	GT2103P 04P R4 GT2103P 04P R2	
					GT01-RS4-M *1	-	
			User preparing Page 421 RS-232 connection diagram 4)	15m	- (Built into GOT)	GT21 04R GT2103P 04P R2	

5

PLC			Connection cable		GOT		Number of connectable equipment *2
Model name	Function expansion board *3	Communication type	Cable model Connection diagram number	Max. distance	Option device *8	Model	
FX3U FX3UC (FX3UC-□□-LT(-2))	FX3U-422-BD	RS-422	GT01-C10R4-8P(1m) GT01-C30R4-8P(3m) GT01-C100R4-8P(10m) GT01-C200R4-8P(20m) GT01-C300R4-8P(30m)	30m	- (Built into GOT)	GT27 GT25 GT23 GT21 07W GT21 05Q GS25 GS21	1 GOT for 1 function expansion board
					GT15-RS4-9S	GT27 GT25	
					GT10-C02H-9SC	GT21 04R GT21 03P 04P R4	
					GT01-RS4-M *1	-	
			GT21-C10R4-8P5(1m) GT21-C30R4-8P5(3m) GT21-C100R4-8P5(10m) GT21-C200R4-8P5(20m) GT21-C300R4-8P5(30m) *6	30m	- (Built into GOT)	GT21 03P 04P ET/R4	
			GT10-C10R4-8P(1m) GT10-C30R4-8P(3m) GT10-C100R4-8P(10m) GT10-C200R4-8P(20m) GT10-C300R4-8P(30m) GT10-C10R4-8PC(1m) GT10-C30R4-8PC(3m) GT10-C100R4-8PC(10m) GT10-C200R4-8PC(20m) GT10-C300R4-8PC(30m) GT10-C10R4-8PL(1m) *4*5	30m	- (Built into GOT)	GT21 04R GT21 03P 04P R4	
			GT10-C10R4-8P(1m) GT10-C30R4-8P(3m) GT10-C10R4-8PC(1m) GT10-C30R4-8PC(3m) GT10-C10R4-8PL(1m) *5	3m	- (Built into GOT)	GT21 03P 04P R4-5V *9	

*1 For details of the GOT multi-drop connection, refer to the following.
☞ Page 1034 GOT MULTI-DROP CONNECTION

*2 When the function expansion board (communication board) and the function adapter are connected, a GOT and a peripheral such as a PC with GX Developer installed can be connected to them individually.

*3 When using function expansion boards or function adapters, confirm the communication settings.
☞ Page 436 When connecting with function extension board or communication special adapter

*4 GT10-C10R4-8PL can be used for FX3U or FX3UC-□□-LT(-2).

*5 For the connection to GOT, refer to the connection diagram.
☞ Page 422 RS-422 connection diagram 1)

*6 For the connection to GOT, refer to the connection diagram.
☞ Page 423 RS-422 connection diagram 6)

*7 When a GT10-C02H-6PT9P unit of the sub version A or B is used, do not ground the case of the D-sub (9-pin) connector.

*8 GT25-W and GT2505-V do not support option devices.

*9 When the GOT is connected via a function expansion board (FX□□-422-BD), add the current consumption of the GOT to the calculation of the current consumption of the 5 V DC power supply built in the PLC main module. For details on the calculation of current consumption of a PLC main module, refer to the following manual.
📖FX SERIES USER'S MANUAL - Hardware Edition

When using the special adapter

Communication driver

MELSEC-FX

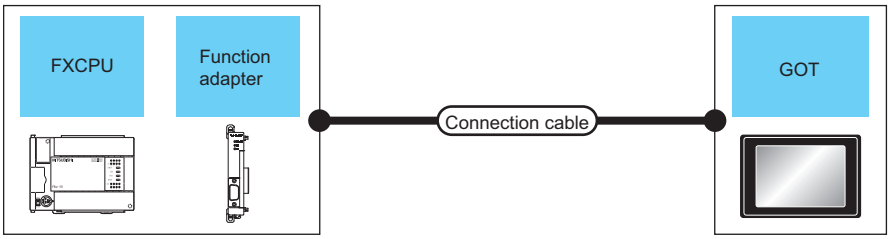

☞ Page 409 FX1NC, FX2NC
☞ Page 411 FX3G, FX3GE, FX3S
☞ Page 412 FX3GC (FX3GC-□□/D, FX3GC-□□/DSS)
☞ Page 413 FX3UC (FX3UC-□□/D, FX3UC-□□/DS, FX3UC-□□/DSS)

■FX1NC, FX2NC

PLC			Connection cable		GOT		Number of connectable equipment *2
Model name	Function adapter *2	Communication type	Cable model Connection diagram number	Max. distance	Option device *4	Model	
FX1NC FX2NC	FX2NC-232ADP	RS-232	GT01-C30R2-9S(3m) or User preparing Page 420 RS-232 connection diagram 1)	15m	- (Built into GOT)	GT27 GT25 GT23 GT21 07W GT21 05Q GS25 GS21	1 GOT for 1 PLC built-in port
					GT15-RS2-9P	GT27 GT25	
					GT10-C02H-6PT9P *3	GT21 03P 04P R4 GT21 03P 04P R2	
					GT01-RS4-M *1	-	
			User preparing Page 421 RS-232 connection diagram 4)	15m	- (Built into GOT)	GT21 04R GT21 03P 04P R2	

PLC			Connection cable		GOT		Number of connectable equipment *2
Model name	Function adapter *2	Communication type	Cable model Connection diagram number	Max. distance	Option device *4	Model	
FX1NC FX2NC	FX0N-232ADP	RS-232	GT01-C30R2-25P(3m) or User preparing Page 420 RS-232 connection diagram 2)	15m	- (Built into GOT)	GT27 GT25 GT23 GT07W21 GT05Q21 GS25 GS21	1 GOT for 1 PLC built-in port
					GT15-RS2-9P	GT27 GT25	
					GT10-C02H-6PT9P *3	GT03P04P21 R4 GT03P04P21 R2	
					GT01-RS4-M *1	-	
			User preparing Page 421 RS-232 connection diagram 5)	15m	- (Built into GOT)	GT04R21 GT03P04P21 R2	

*1 For details of the GOT multi-drop connection, refer to the following.
☞ Page 1034 GOT MULTI-DROP CONNECTION

*2 When using function expansion boards or function adapters, confirm the communication settings.
☞ Page 436 When connecting with function extension board or communication special adapter

*3 When a GT10-C02H-6PT9P unit of the sub version A or B is used, do not ground the case of the D-sub (9-pin) connector.

*4 GT25-W and GT2505-V do not support option devices.

■FX3G, FX3GE, FX3S

PLC			Connection cable		GOT		Number of connectable equipment *2
Model name	Function adapter *3	Communication type	Cable model Connection diagram number	Max. distance	Option device *5	Model	
FX3G	FX3G-CNV-ADP + FX3U-232ADP FX3U-232ADP-MB	RS-232	GT01-C30R2-9S(3m) or User preparing Page 420 RS-232 connection diagram 1)	15m	- (Built into GOT)	GT27 GT25 GT23 GT21 07W GT21 05Q GS25 GS21	1 GOT for 1 function adapter
					GT15-RS2-9P	GT27 GT25	
					GT10-C02H-6PT9P *4	GT21 03P 04P R4 GT21 03P 04P R2	
					GT01-RS4-M *1	-	
			User preparing Page 421 RS-232 connection diagram 4)	15m	- (Built into GOT)	GT21 04R GT21 03P 04P R2	
FX3GE	FX3U-232ADP FX3U-232ADP-MB	RS-232	GT01-C30R2-9S(3m) or User preparing Page 420 RS-232 connection diagram 1)	15m	- (Built into GOT)	GT27 GT25 GT23 GT21 07W GT21 05Q GS25 GS21	1 GOT for 1 function adapter
					GT15-RS2-9P	GT27 GT25	
					GT10-C02H-6PT9P *4	GT21 03P 04P ET/R4	
					GT01-RS4-M *1	-	
FX3S	FX3S-CNV-ADP + FX3U-232ADP FX3U-232ADP-MB	RS-232	GT01-C30R2-9S(3m) or User preparing Page 420 RS-232 connection diagram 1)	15m	- (Built into GOT)	GT27 GT25 GT23 GT21 07W GT21 05Q GS25 GS21	1 GOT for 1 function adapter
					GT15-RS2-9P	GT27 GT25	
					GT10-C02H-6PT9P *4	GT21 03P 04P R4 GT21 03P 04P R2	
					GT01-RS4-M *1	-	
			User preparing Page 421 RS-232 connection diagram 4)	15m	- (Built into GOT)	GT21 04R GT21 03P 04P R2	

*1 For details of the GOT multi-drop connection, refer to the following.
☞ Page 1034 GOT MULTI-DROP CONNECTION
*2 When the function expansion board (communication board) and the function adapter are connected, a GOT and a peripheral such as a PC with GX Developer installed can be connected to them individually.
*3 When using function expansion boards or function adapters, confirm the communication settings.
☞ Page 436 When connecting with function extension board or communication special adapter
*4 When a GT10-C02H-6PT9P unit of the sub version A or B is used, do not ground the case of the D-sub (9-pin) connector.
*5 GT25-W and GT2505-V do not support option devices.

■FX3GC (FX3GC-□□/D, FX3GC-□□/DSS)

PLC			Connection cable		GOT		Number of connectable equipment *2
Model name	Function adapter *3	Communication type	Cable model Connection diagram number	Max. distance	Option device *5	Model	
FX3GC-□□/D FX3GC-□□/DSS	FX3U-232ADP FX3U-232ADP-MB	RS-232	GT01-C30R2-9S(3m) or User preparing Page 420 RS-232 connection diagram 1)	15m	- (Built into GOT)	GT27 GT25 GT23 GT21 07W GT21 05Q GS25 GS21	1 GOT for 1 function adapter
					GT15-RS2-9P	GT27 GT25	
					GT10-C02H-6PT9P *4	GT21 03P 04P R4 GT21 03P 04P R2	
					GT01-RS4-M *1	-	
			User preparing Page 421 RS-232 connection diagram 4)	15m	- (Built into GOT)	GT21 04R GT21 03P 04P R2	

*1 For details of the GOT multi-drop connection, refer to the following.
☞ Page 1034 GOT MULTI-DROP CONNECTION
*2 A GOT and a peripheral such as a PC with GX Developer installed can be connected to the function adapter and the FXCPU individually.
*3 When using function expansion boards or function adapters, confirm the communication settings.
☞ Page 436 When connecting with function extension board or communication special adapter
*4 When a GT10-C02H-6PT9P unit of the sub version A or B is used, do not ground the case of the D-sub (9-pin) connector.
*5 GT25-W and GT2505-V do not support option devices.

■FX3UC (FX3UC-□□/D, FX3UC-□□/DS, FX3UC-□□/DSS)

PLC			Connection cable		GOT		Number of connectable equipment *2
Model name	Function adapter *3	Communication type	Cable model Connection diagram number	Max. distance	Option device *5	Model	
FX3UC-□□/D FX3UC-□□/DS FX3UC-□□/DSS	FX3U-232ADP FX3U-232ADP-MB	RS-232	GT01-C30R2-9S(3m) or User preparing Page 420 RS-232 connection diagram 1)	15m	- (Built into GOT)	GT27 GT25 GT23 GT21 07W GT21 05Q GS25 GS21	1 GOT for 1 function adapter
					GT15-RS2-9P	GT27 GT25	
					GT10-C02H-6PT9P *4	GT21 03P 04P R4 GT21 03P 04P R2	
					GT01-RS4-M *1	-	
			User preparing Page 421 RS-232 connection diagram 4)	15m	- (Built into GOT)	GT21 04R GT21 03P 04P R2	

*1 For details of the GOT multi-drop connection, refer to the following.
☞ Page 1034 GOT MULTI-DROP CONNECTION

*2 A GOT and a peripheral such as a PC with GX Developer installed can be connected to the function adapter and the FXCPU individually.

*3 When using function expansion boards or function adapters, confirm the communication settings.
☞ Page 436 When connecting with function extension board or communication special adapter

*4 When a GT10-C02H-6PT9P unit of the sub version A or B is used, do not ground the case of the D-sub (9-pin) connector.

*5 GT25-W and GT2505-V do not support option devices.

When using the function extension board and special adapter

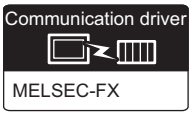

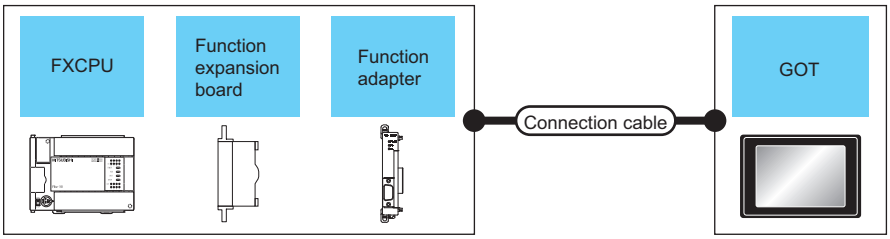

☞ Page 414 FX1S, FX1N, FX2N
☞ Page 416 FX3U, FX3UC (FX3UC-□□-LT(-2))

■FX1S, FX1N, FX2N

PLC				Connection cable		GOT		Number of connectable equipment *3
Model name	Function expansion board *1*3	Function adapter *3	Communication type	Cable model Connection diagram number	Max. distance	Option device *5	Model	
FX1S FX1N FX2N	FX1N-CNV-BD FX2N-CNV-BD	FX2NC-232ADP	RS-232	GT01-C30R2-9S(3m) or User preparing Page 420 RS-232 connection diagram 1)	15m	- (Built into GOT)	GT27 GT25 GT23 GT21 07W GT21 05G GS25 GS21	1 GOT for 1 PLC built-in port
						GT15-RS2-9P	GT27 GT25	
						GT10-C02H-6PT9P *4	GT21 03P 04P R4 GT21 03P 04P R2	
						GT01-RS4-M *2	-	
				User preparing Page 421 RS-232 connection diagram 4)	15m	- (Built into GOT)	GT21 04R GT21 03P 04P R2	

PLC				Connection cable		GOT		Number of connectable equipment *3
Model name	Function expansion board *1*3	Function adapter *3	Communication type	Cable model Connection diagram number	Max. distance	Option device *5	Model	
FX1S FX1N FX2N	FX1N-CNV-BD FX2N-CNV-BD	FX0N-232ADP	RS-232	GT01-C30R2-25P(3m) or User preparing Page 420 RS-232 connection diagram 2)	15m	- (Built into GOT)	GT27 GT25 GT23 GT21 07W GT21 05Q GS25 GS21	1 GOT for 1 PLC built-in port
						GT15-RS2-9P	GT27 GT25	
						GT10-C02H-6PT9P *4	GT21 03P 04P R4 GT21 03P 04P R2	
						GT01-RS4-M*2	-	
				User preparing Page 421 RS-232 connection diagram 5)	15m	- (Built into GOT)	GT21 04R GT21 03P 04P R2	

*1 The function expansion board to be used differs according to the type of the FXCPU. Select the function expansion board from the following table.

Item	Function expansion board to be used	
	When connecting to FX1N or FX1S Series	When connecting to FX Series
When the function adapter is used	FX1N-CNV-BD	FX2N-CNV-BD

*2 For details of the GOT multi-drop connection, refer to the following.
☞ Page 1034 GOT MULTI-DROP CONNECTION

*3 When using function expansion boards or function adapters, confirm the communication settings.
☞ Page 436 When connecting with function extension board or communication special adapter

*4 When a GT10-C02H-6PT9P unit of the sub version A or B is used, do not ground the case of the D-sub (9-pin) connector.

*5 GT25-W and GT2505-V do not support option devices.

■FX3U, FX3UC (FX3UC-□□-LT(-2))

PLC				Connection cable		GOT		Number of connectable equipment *2
Model name	Function expansion board *3	Function adapter *3	Communication type	Cable model Connection diagram number	Max. distance	Option device *5	Model	
FX3U FX3UC (FX3UC-□□-LT(-2))	FX3U-485-BD FX3U-422-BD FX3U-232-BD FX3U-USB-BD FX3U-8AV-BD FX3U-CNV-BD	FX3U-232ADP FX3U-232ADP-MB	RS-232	GT01-C30R2-9S(3m) or User preparing Page 420 RS-232 connection diagram 1)	15m	- (Built into GT27 GT25 GT23 GT21 07W GT21 05Q GS25 GS21)		1 GOT for 1 function adapter
						GT15-RS2-9P	GT27 GT25	
						GT10-C02H-6PT9P *4	GT21 03P 04P R4 GT21 03P 04P R2	
						GT01-RS4-M *1	-	
				User preparing Page 421 RS-232 connection diagram 4)	15m	- (Built into GT21 04R)	GT21 03P 04P R2	

*1 For details of the GOT multi-drop connection, refer to the following.
☞ Page 1034 GOT MULTI-DROP CONNECTION

*2 When the function expansion board (communication board) and the function adapter are connected, a GOT and a peripheral such as a PC with GX Developer installed can be connected to them individually.

*3 When using function expansion boards or function adapters, confirm the communication settings.
☞ Page 436 When connecting with function extension board or communication special adapter

*4 When a GT10-C02H-6PT9P unit of the sub version A or B is used, do not ground the case of the D-sub (9-pin) connector.

*5 GT25-W and GT2505-V do not support option devices.

Connection to WSCPU

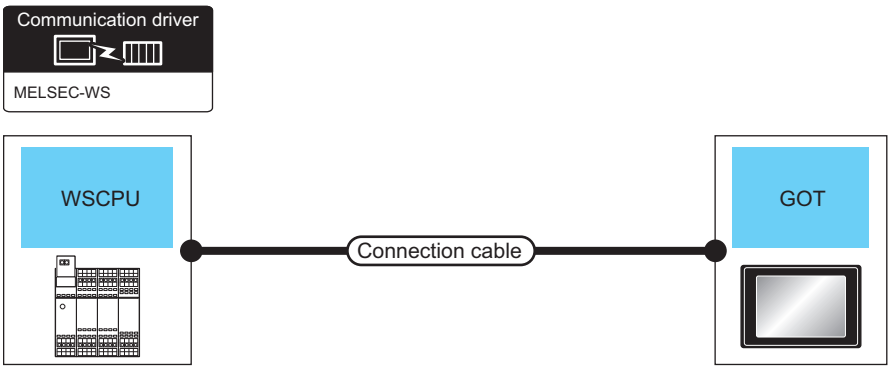

PLC		Connection cable		GOT		Number of connectable equipment
Model name	Communication type	Cable model Connection diagram number	Max. distance	Option device*2	Model	
MELSEC-WS	RS-232	WS0-C20R2(2m)	2m	- (Built into GOT)	GT27 GT25 GT23 GT21 07W GT21 05Q GS25 GS21	1 GOT for 1 PLC
				GT15-RS2-9P	GT27 GT25	
				GT10-C02H-6PT9P*1	GT21 03P 04P R4 GT21 03P 04P R2	
		WS0-C20R2(2m) + User preparing Page 421 RS-232 connection diagram 6)	2.3m	- (Built into GOT)	GT21 04R GT21 03P 04P R2	

*1 When a GT10-C02H-6PT9P unit of the sub version A or B is used, do not ground the case of the D-sub (9-pin) connector.
*2 GT25-W and GT2505-V do not support option devices.

Connection to the Motion CPU (Q170MCPU, Q170MSCPU(-S1))

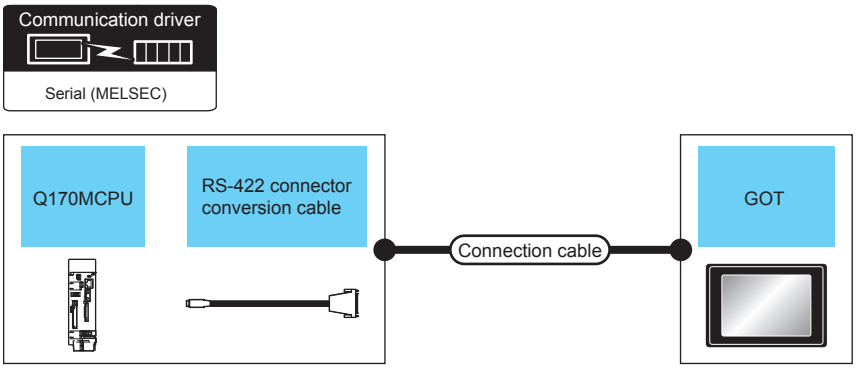

PLC			Connection cable		GOT		Number of connectable equipment
Model name	RS-422 connector conversion cable	Communication type	Cable model	Max. distance	Option device*7	Model	
Q170MCPU	-	RS-232	GT01-C30R2-6P(3m)	3m	- (Built into GOT)	GT27 GT25 GT23 GT21(07W) GT21(05Q) GS25 GS21	1 GOT for 1 PLC
					GT15-RS2-9P	GT27 GT25	
					GT10-C02H-6PT9P*4	GT21(03P 04P R4) GT21(03P 04P R2)	
					GT01-RS4-M*1	-	
			GT10-C30R2-6P(3m)*5	3m	- (Built into GOT)	GT21(04R) GT21(03P 04P R2)	
	FA-CNV2402CBL(0.2m) FA-CNV2405CBL(0.5m)	RS-422	GT01-C30R4-25P(3m) GT01-C100R4-25P(10m) GT01-C200R4-25P(20m)	30m	- (Built into GOT)	GT27 GT25 GT23 GT21(07W) GT21(05Q) GS25 GS21	
					GT15-RS4-9S	GT27 GT25	
					GT10-C02H-9SC	GT21(04R) GT21(03P 04P R4)	
					GT01-RS4-M*1	-	
			GT21-C30R4-25P5(3m) GT21-C100R4-25P5(10m) GT21-C200R4-25P5(20m)*3	30m	- (Built into GOT)	GT21(03P 04P ST R4)	
			GT10-C30R4-25P(3m) GT10-C100R4-25P(10m) GT10-C200R4-25P(20m)*2	30m	- (Built into GOT)	GT21(04R) GT21(03P 04P R4)	

PLC			Connection cable		GOT		Number of connectable equipment
Model name	RS-422 connector conversion cable	Communication type	Cable model	Max. distance	Option device*7	Model	
MR-MQ100	-	RS-422	Q170MIOCBL1M-B(1m) + User preparing Page 424 RS-422 connection diagram 9)	30m	- (Built into GOT)	GT27 GT25 GT23 GT21 GS25 GS21	1 GOT for 1 PLC
					GT15-RS4-9S	GT27 GT25	
					GT10-C02H-9SC	GT21 GT21	
					GT01-RS4-M*1	-	
	-		Q170MIOCBL1M-B(1m) + User preparing Page 425 RS-422 connection diagram 10)	30m	- (Built into GOT)	GT21 GT21 GT21	
	-		Q170MIOCBL1M-A(1m)*6	1m	- (Built into GOT)	GT21 GT21 GT21	

*1 For details of the GOT multi-drop connection, refer to the following.
☞ Page 1034 GOT MULTI-DROP CONNECTION

*2 For the connection to GOT, refer to the connection diagram.
☞ Page 422 RS-422 connection diagram 2)

*3 For the connection to GOT, refer to the connection diagram.
☞ Page 423 RS-422 connection diagram 5)

*4 When a GT10-C02H-6PT9P unit of the sub version A or B is used, do not ground the case of the D-sub (9-pin) connector.

*5 For the connection to GOT, refer to the connection diagram.
☞ Page 420 RS-232 connection diagram 3)

*6 For the connection to GOT, refer to the connection diagram.
☞ Page 425 RS-422 connection diagram 11)

*7 GT25-W and GT2505-V do not support option devices.

Point

When connecting to a Motion CPU (Q series) other than Q170MCPU or Q170MSCPU(-S1)
A Motion CPU (Q series) mounted on the multiple CPU system of the QCPU (Q mode) can be monitored.
The system configuration, connection conditions, and system equipment for connection to a Motion CPU (Q series) are the same as those for connection to a QCPU.
☞ Page 381 Connection to QCPU

5.3 Connection Diagram

The following diagram shows the connection between the GOT and the PLC.

RS-232 cable

Connection diagram

■RS-232 connection diagram 1)

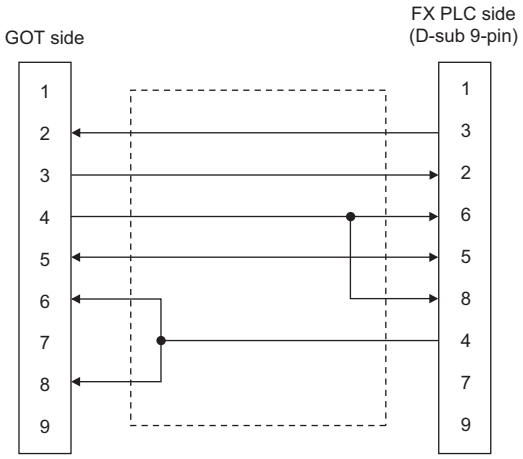

■RS-232 connection diagram 2)

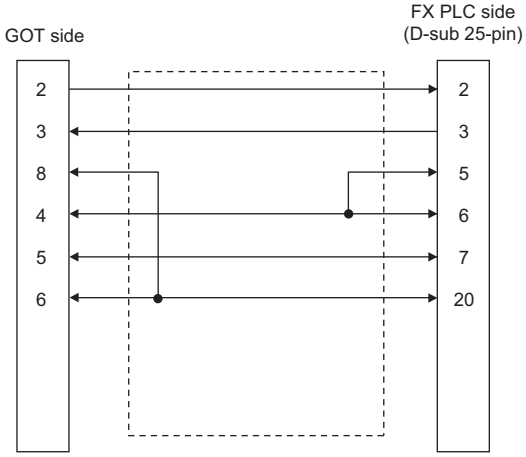

■RS-232 connection diagram 3)

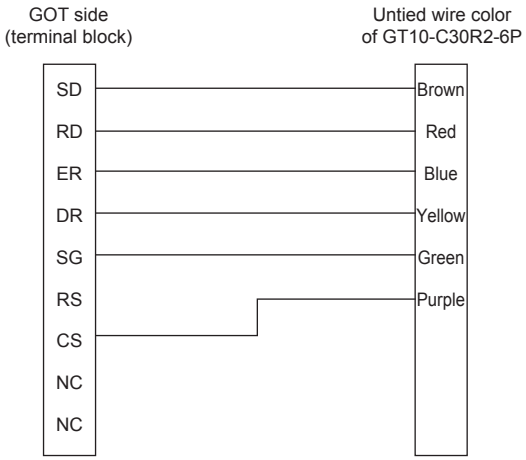

■RS-232 connection diagram 4)

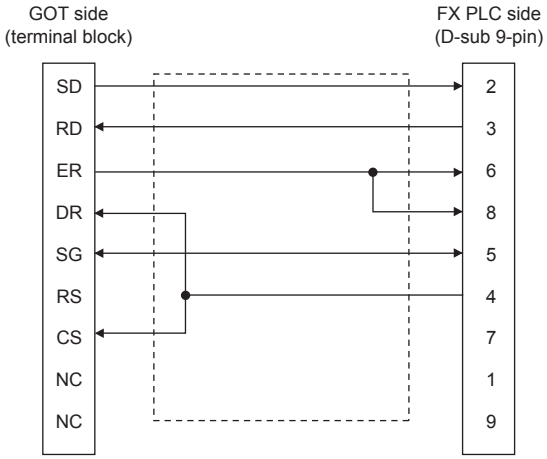

■RS-232 connection diagram 5)

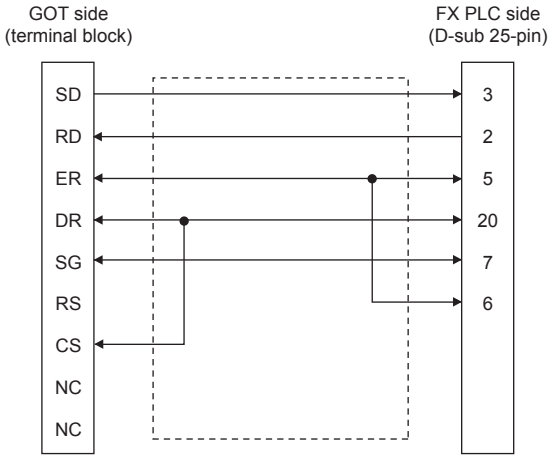

■RS-232 connection diagram 6)

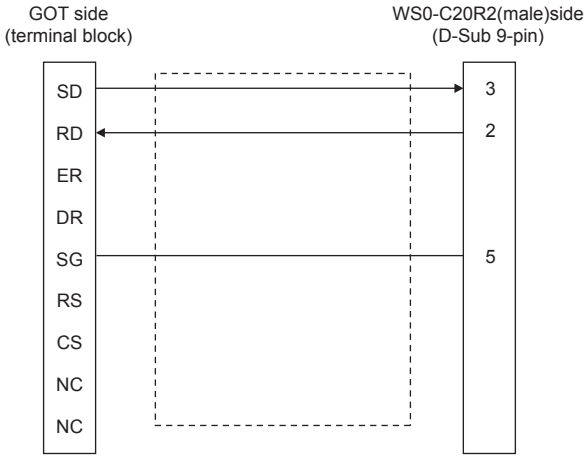

Precautions when preparing a cable

■Cable length

The length of the RS-232 cable must be within the maximum distance specifications.

■GOT side connector

For the GOT side connector, refer to the following.

☞ Page 64 GOT connector specifications

RS-422 cable

Connection diagram

■RS-422 connection diagram 1)

GT21 (input power supply : 24V)

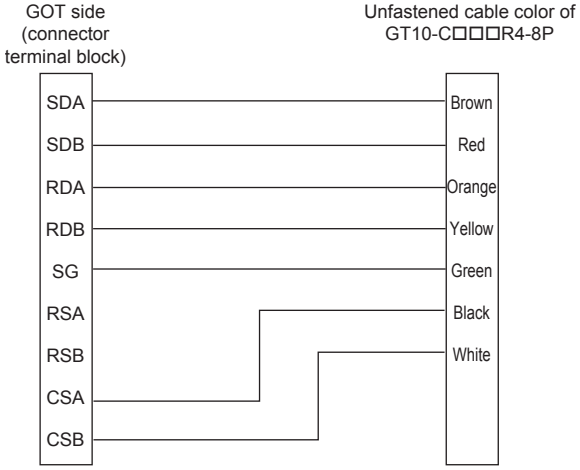

GT21 (input power supply : 5V)

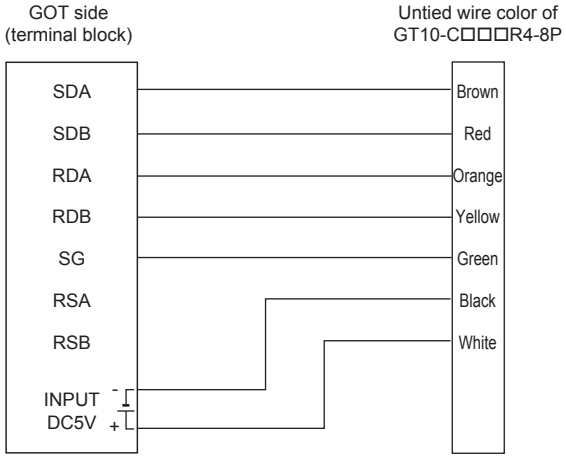

■RS-422 connection diagram 2)

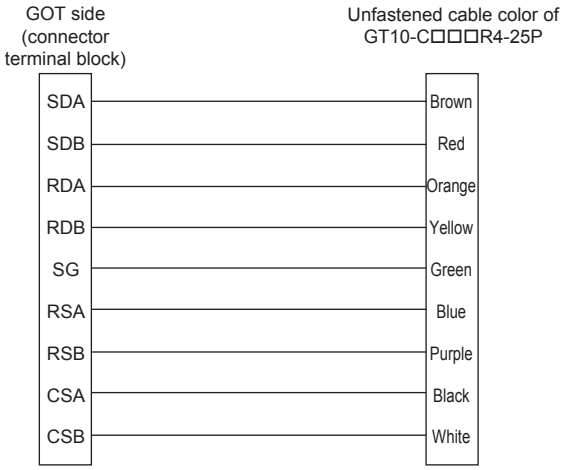

■RS-422 connection diagram 3)

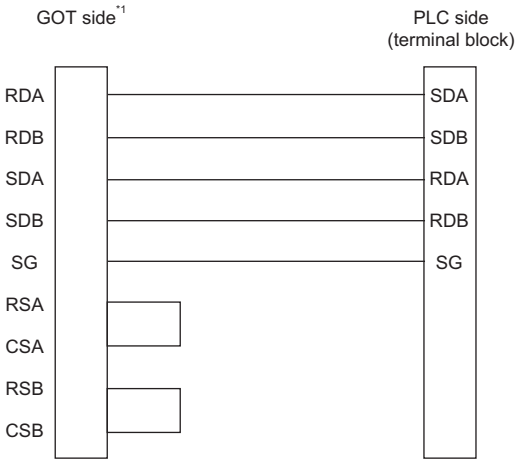

■RS-422 connection diagram 4)

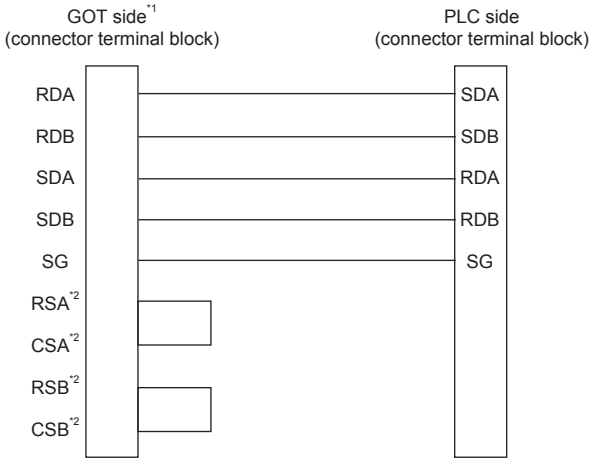

*1 Set the terminating resistor of the GOT side to "330Ω".
☞ Page 68 Terminating resistors of GOT

*2 The signals RSA, RSB, CSA, and CSB are not provided for GT2104-PMBD, GT2103-PMBD. Return connection is not required.

■RS-422 connection diagram 5)

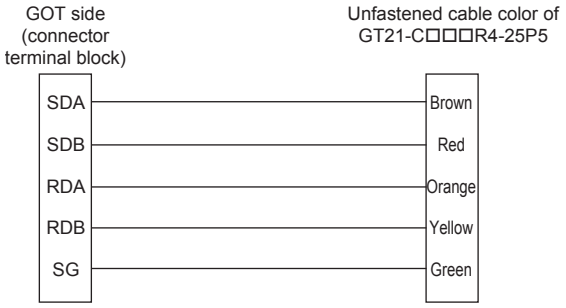

■RS-422 connection diagram 6)

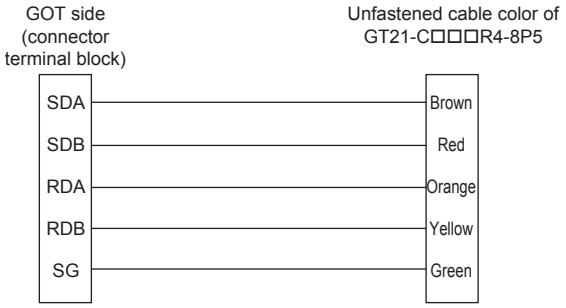

■RS-422 connection diagram 7)

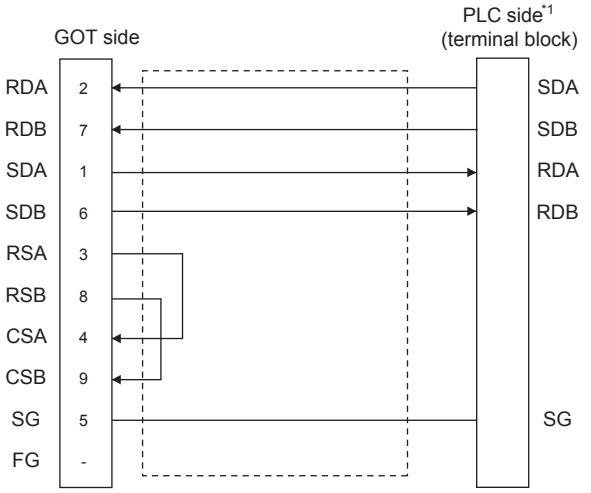

*1 Set the terminating resistor of the PLC side to "330Ω ".

■RS-422 connection diagram 8)

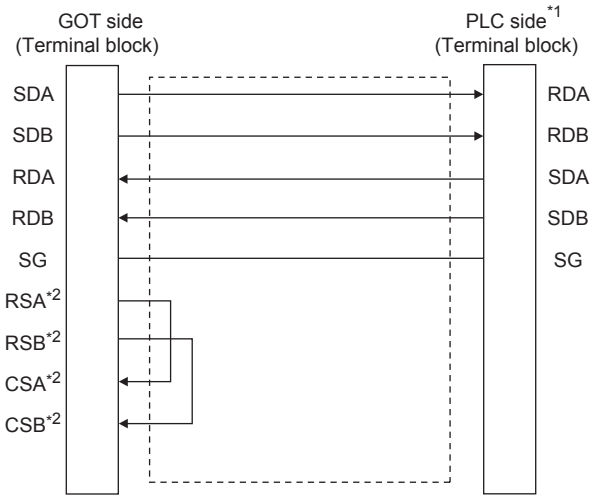

*1 Set the terminating resistor of the PLC side to "330Ω ".

*2 The signals RSA, RSB, CSA, and CSB are not provided for GT2104-PMBD, GT2103-PMBD. Return connection is not required.

■RS-422 connection diagram 9)

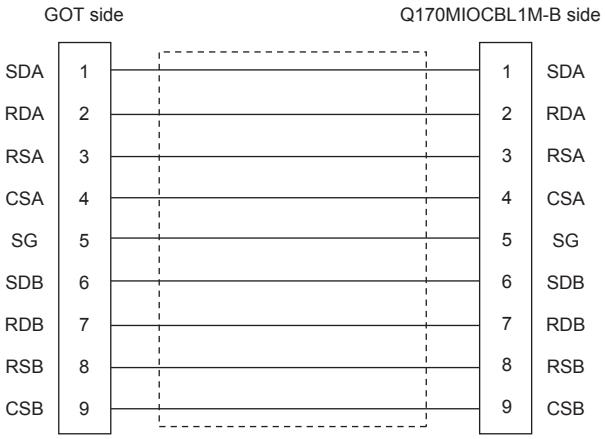

■RS-422 connection diagram 10)

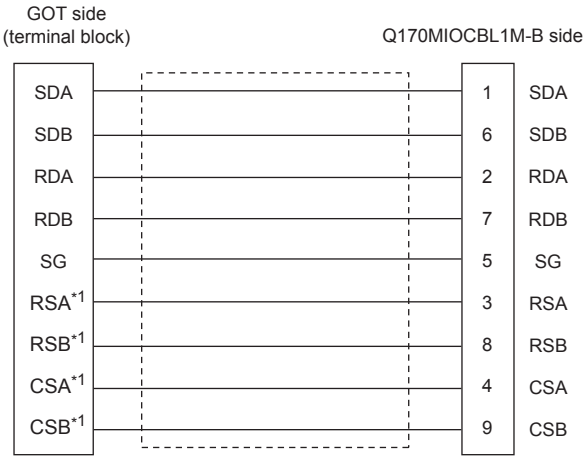

*1 The signals RSA, RSB, CSA, and CSB are not provided for GT2104-PMBD, GT2103-PMBD. Return connection is not required.

■RS-422 connection diagram 11)

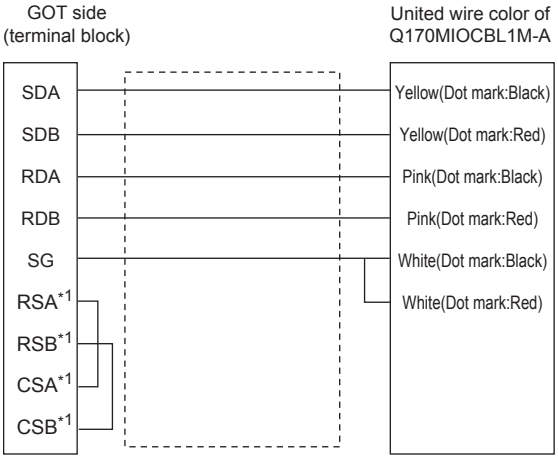

*1 The signals RSA, RSB, CSA, and CSB are not provided for GT2104-PMBD, GT2103-PMBD. Return connection is not required.

Precautions when preparing a cable

■Cable length

The length of the RS-422 cable must be within the maximum distance specifications.

■GOT side connector

For the GOT side connector, refer to the following.

☞ Page 64 GOT connector specifications

Connecting terminating resistors

■GOT side

When connecting a PLC to the GOT, a terminating resistor must be connected to the GOT.

- For GT27, GT25 (except GT2505-V), GT23, GS25

Set the terminating resistor setting switch of the GOT main unit to "Disable".

- For GT2505-V, GT21

Set the terminating resistor selector to "330Ω ".

- For GS21

Since the terminating resistor is fixed to 330 Ω, no setting is required for the terminating resistor.

For the procedure to set the terminating resistor, refer to the following.

☞ Page 68 Terminating resistors of GOT

5.4 GOT Side Settings

Setting communication interface (Controller Setting)

Point

GOT multi-drop connection

When using the serial multi-drop connection unit, refer to the following.

☞ Page 1034 GOT MULTI-DROP CONNECTION

Set the channel of the connected equipment.

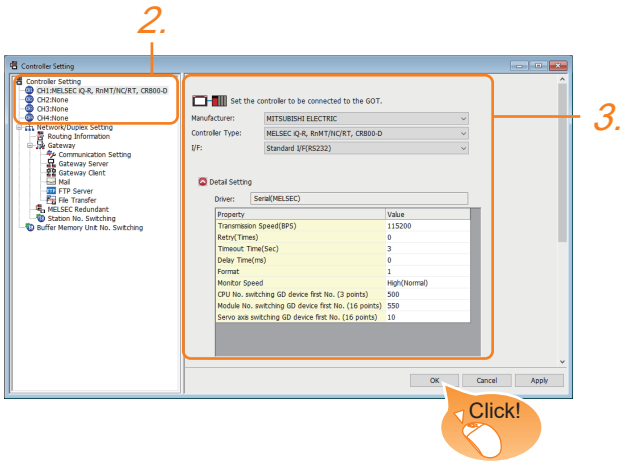

1. Select [Common] → [Controller Setting] from the menu.

2. In the [Controller Setting] window, select the channel No. to be used from the list menu.

3. Set the following items.

- [Manufacturer]: [MITSUBISHI ELECTRIC]
- [Controller Type]: Configure the setting according to the controller to be connected.
- [I/F]: Interface to be used
- [Driver]: Select one of the following items according to the controller to be connected.

<For GT27, GT25, GT23, GS25>

[Serial(MELSEC)]

[MELSEC-FX]

[MELSEC-WS]

<For GT21, GS21>

[Serial(MELSEC)]

[MELSEC-A]

[MELSEC-FX]

- [Detail Setting]: Configure the settings according to the usage environment.

☞ Page 427 Communication detail settings

4. When you have completed the settings, click the [OK] button.

Point

The settings of connecting equipment can be confirmed in [I/F Communication Setting].

For details, refer to the following:

☞ Page 54 I/F communication setting

Communication detail settings

Make the settings according to the usage environment.

Serial (MELSEC)

The following settings are applicable to GT27, GT25, GT23, and GS25.

Property	Value
Transmission Speed(BPS)	115200
Retry(Times)	0
Timeout Time(Sec)	3
Delay Time(ms)	0
Format	1
Monitor Speed	High(Normal)
CPU No. switching GD device first No. (3 points)	500
Module No. switching GD device first No. (16 points)	550
Servo axis switching GD device first No. (16 points)	10

Item	Description	Range
Transmission Speed	Set this item when change the transmission speed used for communication with the connected equipment. (Default: 115200bps) When the setting exceeds the limit of the connected equipment, communication is performed at the fastest transmission speed supported by the connected equipment.	9600bps, 19200bps, 38400bps, 57600bps, 115200bps
Retry	Set the number of retries to be performed when a communication timeout occurs. (Default: 0time)	0 to 5times
Timeout Time	Set the time period for a communication to time out. (Default: 3sec)	1 to 30sec
Delay Time	Set this item to adjust the transmission timing of the communication request from the GOT. (Default: 0ms)	0 to 300 (ms)
Format*3	Select the communication format. (Default: 1)	1, 2
Monitor Speed*4	Set the monitor speed of the GOT. This setting is not valid in all systems. (Default: Normal)	High(Normal)*1 Middle Low*2
CPU No. switching GD device first No. (3 points)	Set the start device number of the GD devices for CPU No. switching. (Default: 500) For the details, refer to the following. ☞ Page 430 Start device number of the GD devices for CPU number switching	0 to 65520
Module No. switching GD device first No. (16 points)	Set the start device number of the GD devices for module No. switching. (Default: 550) For the details, refer to the following. ☞ Page 431 Start device number of the GD devices for module number switching	0 to 65520
Servo axis switching GD device first No. (16 points)	Set the servo axis switching GD device first No. (Default: 10) For the details, refer to the following. ☞ Page 432 Servo axis switching GD device first No.	0 to 65520

*1 This is effective when collecting a large data on other than the monitor screen (logging, recipe function, etc.). However, when connecting to Q00J/Q00/Q01CPU, the sequence scan time may be influenced. If you want to avoid the influence on the sequence scan time, do not set [High(Normal)].
(High performance is hardly affected)

*2 Set this item if you want to avoid the influence on the sequence scan time further than the [Middle] setting when connecting to Q00UJ/Q00U/Q01U/Q02UCPU or Q00J/Q00/Q01CPU. However, the monitor speed may be reduced.

*3 The format setting differs depending on the controller.
L6ADP-R4 adapter: [2]
Other than L6ADP-R4 adapter: [1]

*4 When using a global label, to read or write more than 235 two-byte characters, set the [Monitor speed] to [High (Standard)] or [Middle]. If [Monitor speed] is set to [Low], a system error occurs when reading or writing.
For details, refer to the following manual.
📖GT Designer3 (GOT2000) Screen Design Manual

MELSEC-FX

Property	Value
Transmission Speed(BPS)	115200
Retry(Times)	0
Timeout Time(Sec)	3
Delay Time(ms)	0

Item	Description	Range
Transmission Speed	Set this item when change the transmission speed used for communication with the connected equipment. (Default: 115200bps) When the setting exceeds the limit of the connected equipment, communication is performed at the fastest transmission speed supported by the connected equipment.	9600bps, 19200bps, 38400bps, 57600bps, 115200bps
Retry	Set the number of retries to be performed when a communication timeout occurs. When receiving no response after retries, the communication times out. (Default: 0time)	0 to 5times
Timeout Time	Set the time period for a communication to time out. (Default: 3sec)	1 to 30sec
Delay Time	Set this item to adjust the transmission timing of the communication request from the GOT. (Default: 0ms)	0 to 300 (ms)

MELSEC-WS

Property	Value
Transmission Speed(BPS)	115200
Retry(Times)	3
Timeout Time(Sec)	3
Delay Time(ms)	5

Item	Description	Range
Transmission Speed	Set this item when change the transmission speed used for communication with the connected equipment. (Default: 115200bps) When the setting exceeds the limit of the connected equipment, communication is performed at the fastest transmission speed supported by the connected equipment.	9600bps, 19200bps, 38400bps, 57600bps, 115200bps
Retry	Set the number of retries to be performed when a communication timeout occurs. When receiving no response after retries, the communication times out. (Default: 3times)	0 to 5times
Timeout Time	Set the time period for a communication to time out. (Default: 3sec)	1 to 30sec
Delay Time	Set this item to adjust the transmission timing of the communication request from the GOT. (Default: 5ms)	0 to 300 (ms)

Serial (MELSEC)

The following devices are available to GT21 and GS21.

Property	Value
Transmission Speed(BPS)	115200
Retry(Times)	0
Timeout Time(Sec)	3
Delay Time(ms)	0
Format	1
CPU No. switching GD device first No. (3 points)	500
Module No. switching GD device first No. (16 points)	550
Servo axis switching GD device first No. (16 points)	10

Item	Description	Range
Transmission Speed	Set this item when change the transmission speed used for communication with the connected equipment. (Default: 115200bps) When the setting exceeds the limit of the connected equipment, communication is performed at the fastest transmission speed supported by the connected equipment.	9600bps, 19200bps, 38400bps, 57600bps, 115200bps
Retry	Set the number of retries to be performed when a communication error occurs. (Default: 0time)	0 to 5times
Timeout Time	Set the time period for a communication to time out. (Default: 3sec)	3 to 30sec
Delay Time	Set this item to adjust the transmission timing of the communication request from the GOT. (Default: 0ms)	0 to 300 (ms)
Format*1	Set the communication format. (Default: 1)	1, 2
CPU No. switching GD device first No. (3 points)	Set the start device number of the GD devices for CPU No. switching. (Default: 500) For the details, refer to the following. ☞ Page 430 Start device number of the GD devices for CPU number switching	0 to 2032
Module No. switching GD device first No. (16 points)	Set the start device number of the GD devices for module No. switching. (Default: 550) For the details, refer to the following. ☞ Page 431 Start device number of the GD devices for module number switching	0 to 2032
Servo axis switching GD device first No. (16 points)	Set the servo axis switching GD device first No. (Default: 10) For the details, refer to the following. ☞ Page 432 Servo axis switching GD device first No.	0 to 2032

*1 The format setting differs depending on the controller.
L6ADP-R4 adapter: [2]
Other than L6ADP-R4 adapter: [1]

MELSEC-A

The following devices are available to GT21 and GS21.

Property	Value
Transmission Speed(BPS)	9600

Item	Description	Range
Transmission Speed	Set this item when change the transmission speed used for communication with the connected equipment. (Default: 9600bps) When the setting exceeds the limit of the connected equipment, communication is performed at the fastest transmission speed supported by the connected equipment.	9600bps

Point

• Communication interface setting by the Utility

The communication interface setting can be changed on the Utility's [Communication Settings] after writing [Controller Setting] of project data.

For details on the Utility, refer to the following manual.

GOT2000 Series User's Manual (Utility)

• Precedence in communication settings

When settings are made by GT Designer3 or the Utility, the latest setting is effective.

Start device number of the GD devices for CPU number switching

■Specifying a CPU number with a device

[CPU No.] can be specified with the GOT internal registers (GD devices) by specifying a value (100 to 102) to [CPU No.] in the device setting dialog in GT Designer3.

Set the start device number of the GD devices to be used in [CPU No. switching GD device first No. (3 points)].

Specify [CPU No.] with the three consecutive GD devices, starting the set device number.

When [500] is set to [CPU No. switching GD device first No. (3 points)], GD500 to GD502 are used to specify [CPU No.] as shown in the following table.

CPU No.	GD device	Setting range
100	GD500	1 to 4 Setting an invalid value causes a communication timeout error. Specifying a nonexistent CPU No. or a CPU No. not supporting a multiple CPU system with a device causes a controller error.
101	GD501	
102	GD502	

■Specifying a CPU number with a device on the initially-displayed screen

Set [CPU No. switching GD device first No. (3 points)] so that the values of the GD devices are retained and monitored upon the GOT startup.

■Specifying a CPU number with a device in a multi-channel connection

If the setting range of [CPU No. switching GD device first No. (3 points)] set in each channel overlaps, the monitoring target CPU No. set to each channel is switched simultaneously.

Set [CPU No. switching GD device first No. (3 points)] in each channel so that the setting range does not overlap.

■Specifying a CPU number and a station number with devices in a multi-channel connection

When GD10 to GD25 are used to specify the station No. of an inverter or non-Mitsubishi temperature controller connected, setting [10] to [CPU No. switching GD device first No. (3 points)] in a different channel switches the monitoring target CPU No. and station No. of an inverter or non-Mitsubishi temperature controller set to each channel simultaneously.

Set [CPU No. switching GD device first No. (3 points)] so that the setting range does not overlap the station No. of an inverter or non-Mitsubishi temperature controller.

Start device number of the GD devices for module number switching

■Specifying a module number with a device

In a connection via a simple motion module, [Unit No.] can be specified with the GOT internal registers (GD devices) by specifying a value (100 to 10F) to [Unit No.] in the device setting dialog in GT Designer3.
Set the start device number of the GD devices to be used in [Module No. switching GD device first No. (16 points)].
Specify [Unit No.] with the 16 consecutive GD devices, starting the set device number.
When [550] is set to [Module No. switching GD device first No. (16 points)], GD550 to GD565 are used to specify [Unit No.] as shown in the following table.

Unit No.	GD device	Setting range
100	GD550	The setting range depends on [Unit Type]. • When [MELSEC iQ-R, RnMT/NC/RT, CR800-D], [MELSEC iQ-R, RnMT/RT, CR800-D], [MELSEC-Q/QS, Q17nD/M/NC/DR/DSR, CRnD-700], [MELSEC-Q, Q17nD/M/DR/DSR, CRnD-700], [MELSEC-L] or [MELIPC] is selected for [Unit Type] 00 to FF • When [MELSEC iQ-F] is selected for [Unit Type] 01 to 10 Setting an invalid value causes a device range error.
101	GD551	
102	GD552	
103	GD553	
104	GD554	
105	GD555	
106	GD556	
107	GD557	
108	GD558	
109	GD559	
10A	GD560	
10B	GD561	
10C	GD562	
10D	GD563	
10E	GD564	
10F	GD565	

■Specifying a module number with a device on the initially-displayed screen

Set [Module No. switching GD device first No. (16 points)] so that the values of the GD devices are retained and monitored upon the GOT startup.

■Specifying a module number with a device in a multi-channel connection

If the setting range of [Module No. switching GD device first No. (16 points)] set in each channel overlaps, the module No. of the simple motion module via the servo amplifier device of each channel is switched simultaneously.
Set [Module No. switching GD device first No. (16 points)] for each channel so that the setting range does not overlap.

■Specifying a station number and a module number with devices in a multi-channel connection

When GD10 to GD25 are used to specify the station No. of an inverter or non-Mitsubishi temperature controller connected, setting [10] to [Module No. switching GD device first No. (16 points)] switches the module No. of the simple motion module via the servo amplifier device and the station No. of an inverter or non-Mitsubishi temperature controller set to each channel simultaneously.
Set [Module No. switching GD device first No. (16 points)] so that the setting range does not overlap the station No. of an inverter or non-Mitsubishi temperature controller.

Servo axis switching GD device first No.

■Indirect specification of the servo axis No.

In a connection via a Motion CPU or Simple Motion module, a servo axis No. can be indirectly specified with GOT internal registers (GD devices) by specifying a value (100 to 115) to the axis No. of the servo amplifier device.
Set the start device number of the GD devices to be used in [Servo axis switching GD device first No. (16 points)].
Specify a servo axis number with 16 consecutive GD devices, starting the set device number.
When [10] is set to [Servo axis switching GD device first No. (16 points)], GD10 to GD25 are used to specify a servo axis number as shown in the following table.

Servo axis No.	GD device	Setting range
100	GD10	1 to 64 Setting an invalid value causes a device range error.
101	GD11	
102	GD12	
103	GD13	
104	GD14	
105	GD15	
106	GD16	
107	GD17	
108	GD18	
109	GD19	
110	GD20	
111	GD21	
112	GD22	
113	GD23	
114	GD24	
115	GD25	

■Specifying a servo axis number with a device on the initially-displayed screen

Set [Servo axis switching GD device first No. (16 points)] so that the values of the GD devices are retained and monitored upon the GOT startup.

■Specifying a servo axis number with a device in a multi-channel connection

If the setting rage of [Servo axis switching GD device first No. (16 points)] set in each channel overlaps, the axis No. of the servo amplifier of each channel is switched simultaneously.
Set [Servo axis switching GD device first No. (16 points)] for each channel so that the setting range does not overlap.

■Specifying a station number and a servo axis number with devices in a multi-channel connection

When GD10 to GD25 are used to specify the station No. of an inverter or non-Mitsubishi temperature controller connected, setting [10] to [Servo axis switching GD device first No. (16 points)] switches the axis No. of the servo amplifier and the station No. of an inverter or non-Mitsubishi temperature controller set to each channel simultaneously.
Set [Servo axis switching GD device first No. (16 points)] so that the setting range does not overlap the station No. of an inverter or non-Mitsubishi temperature controller.

Point

Cutting the portion of multiple connection of the controller

By setting GOT internal device, GOT can cut the portion of multiple connection of the controller. For example, faulty station that has communication timeout can be cut from the system.

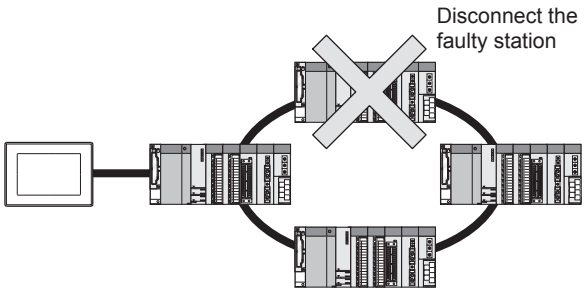

For details of the setting contents of GOT internal device, refer to the following manual.

GT Designer3 (GOT2000) Screen Design Manual

5.5 PLC Side Setting

When the GOT and a PLC is connected using the direct CPU connection, no setting is required in the PLC.
When connecting the GOT and an LCPU via an L6ADP-R4/L6ADP-R2 adapter, configure the following communication settings.
For the L6ADP-R2 adapter, configure the communication settings in GX Works2 only.

L6ADP-R4 adapter settings

Set the communication settings by the DIP switches of the L6ADP-R4 adapter.

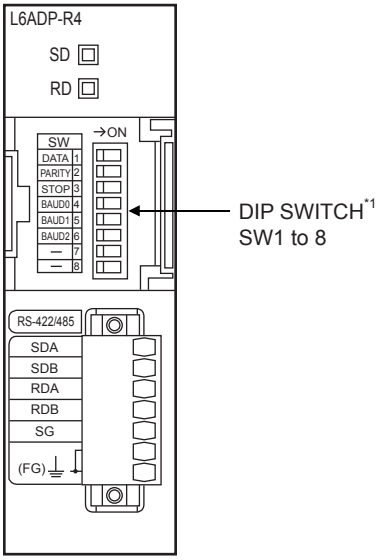

*1 SW7 and SW8 are not used.

DIP switches (SW1 to SW3)

Set the data length, parity bit, and stop bit.

Setting switch	Description	Setting range	
SW1	Data length*1	OFF	7bit
		ON	8bit
SW2	Parity*1	OFF	Disable
		ON	Enable
SW3	Stop bit*1	OFF	1bit
		ON	2bit

*1 Adjust the settings with GOT settings.
☞ Page 427 Communication detail settings

DIP switches (SW4 to SW6)

Set the transmission speed.

Setting switch	Transmission speed*1				
	9600 bps	19200 bps	38400 bps	57600 bps	115200 bps
SW4	ON	OFF	ON	OFF	ON
SW5	ON	OFF	OFF	ON	ON
SW6	OFF	ON	ON	ON	ON

*1 Adjust the settings with GOT settings.
☞ Page 427 Communication detail settings

GX Works2 settings

Set the communication speed in GX Works2.

For L6ADP-R4 adapter

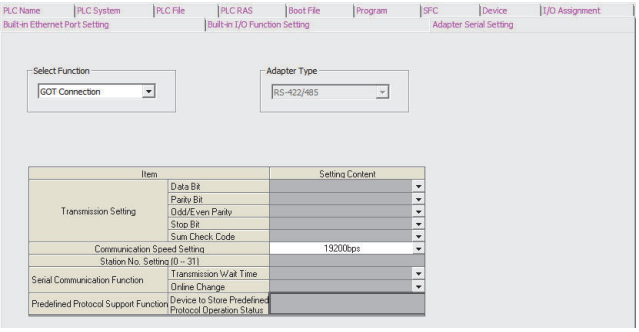

1. Click [PLC parameter] → [Adapter Serial Setting].
2. Set [GOT Connection] in [Select Function].
3. Adjust [Communication Speed Setting] with the GOT communication setting.

☞ Page 427 Communication detail settings

For L6ADP-R2 adapter

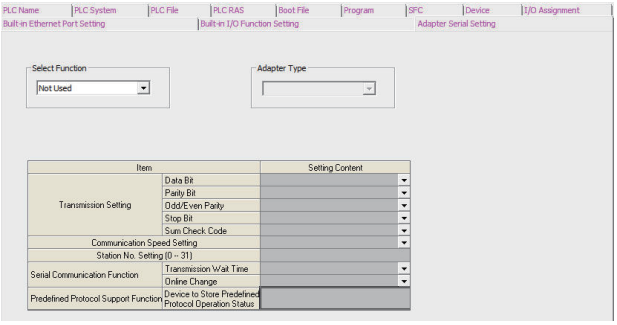

1. Click [PLC parameter] → [Adapter Serial Setting].
2. Check that [Not Used] (default) is set in [Select Function].

Point

L6ADP-R4/L6ADP-R2 adapter

For details on the L6ADP-R4/L6ADP-R2 adapter, refer to the following manual.

📖MELSEC-L CPU Module User's Manual (Hardware Design, Maintenance and Inspection)

5.6 Precautions

Connection to FXCPU

■When connecting to FX3 series

When the keyword of FXCPU (FX3 series) has been set, GOT may not be able to monitoring.Perform an I/O check again.

☞ (Page 78 Perform an I/O check) When the result of the I/O check is normal, check the status of keyword registration.

■When connecting with function extension board or communication special adapter

When a sequence program and settings that the FXCPU communicates with devices other than the GOT are set with software, including GX Developer, the FXCPU cannot communicate with the GOT.

- Settings with sequence program

Check the sequence program and delete the following.

📖FX SERIES PROGRAMMABLE CONTROLLERS USER'S MANUAL - Data Communication Edition

No protocol communication (RS instruction)

Sequence program with the computer link, N:N network, and parallel link

Parameter setting

Set the following special registers to 0.

Except FX3U, FX3UC: D8120

FX3U, FX3UC: D8120, D8400, D8420

FX3G, FX3GC, FX3GE: D8120, D8400, D8420, D8370

FX3S: D8120, D8400

- Settings with GX Developer

Select [PLC parameter] in [Parameter], and then click the PLC system(2) tab on the FX parameter screen.

Uncheck [Operate communication setting], and then transfer the parameter to the programmable controller.After the transfer, turn off the programmable controller, and then turn on the programmable controller again.

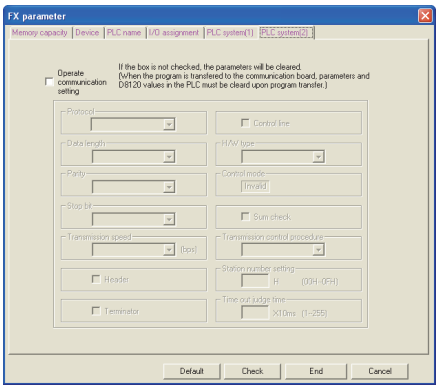

Connection in the multiple CPU system

When the GOT is connected to multiple CPU system, the following time is taken until when the PLC runs.

- QCPU (Q mode), Motion CPU (Q series): 10 seconds or more
- MELDAS C70: 18 seconds or more

When the GOT starts before the PLC runs, a system alarm occurs.Adjust the opening screen time in the GOT setup so that no system alarm occurs.

📖GT Designer3 (GOT2000) Screen Design Manual

Connection to LCPU

■When a system alarm occurs at GOT startup

LCPU may diagnose (check file system, recovering process, etc.) the SD memory card when turning on the power or when resetting. Therefore, it takes time until the SD memory card becomes available. When the GOT starts before the SD card becomes available, a system alarm occurs. Adjust the opening screen time in the GOT setup so that no system alarm occurs.

📖GT Designer3 (GOT2000) Screen Design Manual

■When the module is L02SCPU or L02SCPU-P

Do not set the serial communication function of L02SCPU or L02SCPU-P.

If it is set, communications may be unavailable.

Connection to QCPU

Do not set the serial communication function of Q00UJ/Q00U/Q01U/Q02U/Q03UD/Q04UDH/Q06UDH/Q10UDH/Q13UDH/Q20UDH/Q26UDHCPU, Q00/Q01CPU.

If the function is set, the communication may not be performed.

Connection to Q170MCPU or Q170MSCPU(-S1)

Set [CPU No.] to 2 in the device setting to monitor the device of the Motion CPU area (CPU No. 2).

When [CPU No.] is set to 0 or 1, the device on the PLC CPU area (CPU No. 1) is monitored.

When [CPU No.] is set to the number other than 0 to 2, a communication error occurs and the monitoring cannot be executed.

For the setting of [CPU No.], refer to the following.

📖GT Designer3 (GOT2000) Screen Design Manual

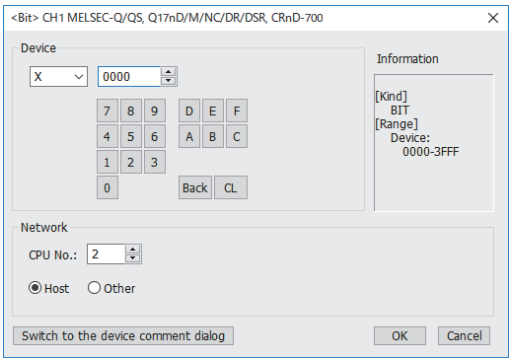

Connection to MELSEC iQ-F Series

Point

MELSEC iQ-F Series communication settings

For details of MELSEC iQ-F Series communication settings, refer to the following manual.

MELSEC iQ-F Series User's Manual

Module parameter settings as a default value (MELSOFT Connection).

If it sets up other than a default value, it becomes impossible to communicate with GOT.

■Module parameter setting

(When using FX5-485-BD)

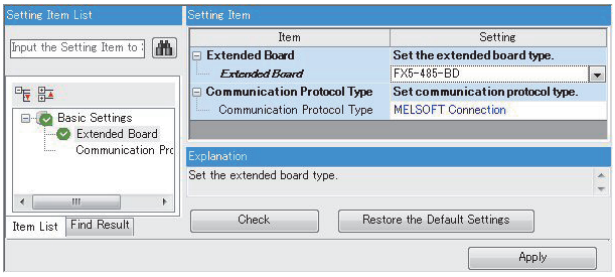

Point

When changing the module parameter

After writing module parameters to the PLC CPU, turn the PLC CPU OFF then back ON again, or reset the PLC CPU.

Connection with the motion controller A series

When the following motion controller A series is connected, LINK UNIT ERROR (42) may occur in the SCPU (CPU for PLC control) depending on the content of the displayed screen.

- A171SHCPU, A171SHCPUN, A172SHCPU, A172SHCPUN

In this case, reduce the number of monitored devices to less than 128.

The number of monitored devices includes the number of devices of functions running in the background such as alarm, logging, and script in addition to the displayed base screens and window screens.

6 SERIAL COMMUNICATION CONNECTION

- Page 439 Connectable Model List
- Page 446 System Configuration
- Page 463 Connection Diagram
- Page 468 GOT Side Settings
- Page 478 PLC Side Setting
- Page 491 Precautions

6.1 Connectable Model List

The following table shows the connectable models.

PLC/Motion CPU

Series	Model name	Clock	Communication type	Connectable model	Refer to
MELSEC iQ-R Series	R00CPU	○	RS-232 RS-422	GT27 GT25 GT23 GT21 07W GT21 05Q GT21 04R GT21 03P 04P ET/R4 GT21 03P 04P R4 GT21 03P 04P R2 GS25 GS21	☞ Page 446 Connection to MELSEC iQ-R series
	R01CPU				
	R02CPU				
	R04CPU				
	R08CPU				
	R16CPU				
	R32CPU				
	R120CPU				
	R08PCPU*1	○	RS-232 RS-422	GT27 GT25 GT23 GT21 07W GT21 05Q GT21 04R GT21 03P 04P ET/R4 GT21 03P 04P R4 GT21 03P 04P R2 GS25 GS21	☞ Page 446 Connection to MELSEC iQ-R series
	R16PCPU*1				
	R32PCPU*1				
	R120PCPU*1				
	R04ENCPU	○	RS-232 RS-422	GT27 GT25 GT23 GT21 07W GT21 05Q GT21 04R GT21 03P 04P ET/R4 GT21 03P 04P R4 GT21 03P 04P R2 GS25 GS21	☞ Page 446 Connection to MELSEC iQ-R series
	R08ENCPU				
	R16ENCPU				
	R32ENCPU				
	R120ENCPU				
	R08PSFCPU	○	-	-	-
	R16PSFCPU				
	R32PSFCPU				
	R120PSFCPU				
	R08SFCPU*2	○	RS-232 RS-422	GT27 GT25 GT23 GT21 07W GT21 05Q GT21 04R GT21 03P 04P ET/R4 GT21 03P 04P R4 GT21 03P 04P R2 GS25 GS21	☞ Page 446 Connection to MELSEC iQ-R series
	R16SFCPU*2				
	R32SFCPU*2				
	R120SFCPU*2				
Motion CPU (MELSEC iQ-R Series)	R16MTCPU	○	RS-232 RS-422	GT27 GT25 GT23 GT21 07W GT21 05Q GT21 04R GT21 03P 04P ET/R4 GT21 03P 04P R4 GT21 03P 04P R2 GS25 GS21	☞ Page 446 Connection to MELSEC iQ-R series
	R32MTCPU				
	R64MTCPU				
C Controller module (MELSEC iQ-R Series)*3	R12CCPU-V	○	RS-232 RS-422	GT27 GT25 GT23 GT21 07W GT21 05Q GT21 04R GT21 03P 04P ET/R4 GT21 03P 04P R4 GT21 03P 04P R2 GS25 GS21	☞ Page 446 Connection to MELSEC iQ-R series
MELSECWinCPU (MELSEC iQ-R Series)*3	R102WCPU-W	×	RS-232 RS-422	GT27 GT25 GT23 GT21 07W GT21 05Q GT21 04R GT21 03P 04P ET/R4 GT21 03P 04P R4 GT21 03P 04P R2 GS25 GS21	☞ Page 446 Connection to MELSEC iQ-R series

Series	Model name	Clock	Communication type	Connectable model	Refer to
CNC C80	R16NCCPU-S1	○	RS-232 RS-422	GT27 GT25 GT23 GT21 07W GS25 GS21	☞ Page 446 Connection to MELSEC iQ-R series
Robot controller (MELSEC iQ-R Series)	CR800-R(R16RTCPU)	○	RS-232 RS-422	GT27 GT25 GT23 GT21 07W GT21 05Q GT21 04R GT21 03P 04P ET/R4 GT21 03P 04P R4 GT21 03P 04P R2 GS25 GS21	☞ Page 446 Connection to MELSEC iQ-R series
CC-Link IE Field Network head module	RJ72GF15-T2	×	RS-232 RS-422	GT27 GT25 GT23 GT21 07W GT21 05Q GT21 04R GT21 03P 04P ET/R4 GT21 03P 04P R4 GT21 03P 04P R2 GS25 GS21	☞ Page 446 Connection to MELSEC iQ-R series
MELSEC iQ-F Series	FX5U	○	RS-232 RS-422	-	-
	FX5UC				
	FX5UJ				
	FX5S				
MELSEC-Q (Q mode)	Q00JCPU	○	RS-232 RS-422	GT27 GT25 GT23 GT21 07W GT21 05Q GT21 04R GT21 03P 04P ET/R4 GT21 03P 04P R4 GT21 03P 04P R2 GS25 GS21	☞ Page 448 Connection to QCPU (Q mode)
	Q00CPU*4				
	Q01CPU*4				
	Q02CPU*4				
	Q02HCPU*4 Q06HCPU*4 Q12HCPU*4 Q25HCPU*4				
	Q02PHCPU Q06PHCPU Q12PHCPU Q25PHCPU	○	RS-232 RS-422	GT27 GT25 GT23 GS25	☞ Page 448 Connection to QCPU (Q mode)
	Q12PRHCPU (Main base)	○	-	-	-
	Q25PRHCPU (Main base)				
	Q12PRHCPU (Extension base)	○	RS-232 RS-422	GT27 GT25 GT23 GS25	☞ Page 448 Connection to QCPU (Q mode)
	Q25PRHCPU (Extension base)				
	Q00UJCPU Q00UJCPU-S8	○	RS-232 RS-422	GT27 GT25 GT23 GT21 07W GT21 05Q GT21 04R GT21 03P 04P ET/R4 GT21 03P 04P R4 GT21 03P 04P R2 GS25 GS21	☞ Page 448 Connection to QCPU (Q mode)
	Q00UCPU				
	Q01UCPU				
	Q02UCPU				
	Q03UDCPU				
	Q04UDHCPU Q06UDHCPU Q10UDHCPU Q13UDHCPU Q20UDHCPU Q26UDHCPU				
	Q03UDECPU Q04UDEHCPU Q06UDEHCPU Q10UDEHCPU Q13UDEHCPU Q20UDEHCPU Q26UDEHCPU Q50UDEHCPU Q100UDEHCPU				
	Q03UDVCPU Q04UDVCPU Q06UDVCPU Q13UDVCPU Q26UDVCPU				

Series	Model name	Clock	Communication type	Connectable model	Refer to
C Controller module (Q Series) *3	Q12DCCPU-V *5 Q24DHCCPU-V/VG Q24DHCCPU-LS Q26DHCCPU-LS	○	RS-232 RS-422	GT27 GT25 GT23 GT21 07W GT21 05Q GT21 04R GT21 03P 04P ET/R4 GT21 03P 04P R4 GT21 03P 04P R2 GS25 GS21	☞ Page 448 Connection to QCPU (Q mode)
MELSEC-QS	QS001CPU	×	-	-	-
MELSEC-L	L02CPU L06CPU L26CPU L26CPU-BT L02CPU-P L06CPU-P L26CPU-P L26CPU-PBT L02SCPU L02SCPU-P	○	RS-232 RS-422	GT27 GT25 GT23 GT21 07W GT21 05Q GT21 04R GT21 03P 04P ET/R4 GT21 03P 04P R4 GT21 03P 04P R2 GS25 GS21	☞ Page 450 Connection to LCPU
MELSEC-Q (A mode)	Q02CPU-A Q02HCPU-A Q06HCPU-A	○	RS-232 RS-422	GT27 GT25 GT23 GT21 07W GT21 05Q GT21 04R GT21 03P 04P ET/R4 GT21 03P 04P R4 GT21 03P 04P R2 GS25 GS21	☞ Page 452 Connection to QCPU (A mode)
MELSEC-QnA (QnACPU)*6	Q2ACPU Q2ACPU-S1 Q3ACPU Q4ACPU	○	RS-232 RS-422	GT27 GT25 GT23 GT21 07W GT21 05Q GT21 04R GT21 03P 04P ET/R4 GT21 03P 04P R4 GT21 03P 04P R2 GS25 GS21	☞ Page 453 Connection to QnACPU (QnACPU type)
	Q4ARCPU	○	RS-232 RS-422	GT27 GT25 GT23 GS25	
MELSEC-QnA (QnASCPU)*6	Q2ASCPU Q2ASCPU-S1 Q2ASHCPU Q2ASHCPU-S1	○	RS-232 RS-422	GT27 GT25 GT23 GT21 07W GT21 05Q GT21 04R GT21 03P 04P ET/R4 GT21 03P 04P R4 GT21 03P 04P R2 GS25 GS21	☞ Page 456 Connection to QnACPU (QnASCPU type)
MELSEC-A (AnCPU)	A2UCPU A2UCPU-S1 A3UCPU A4UCPU A2ACPU A2ACPUP21 A2ACPUR21 A2ACPU-S1 A2ACPUP21-S1 A2ACPUR21-S1 A3ACPU A3ACPUP21 A3ACPUR21 A1NCPU A1NCPUP21 A1NCPUR21 A2NCPU A2NCPUP21 A2NCPUR21 A2NCPU-S1 A2NCPUP21-S1 A2NCPUR21-S1 A3NCPU A3NCPUP21 A3NCPUR21	○	RS-232 RS-422	GT27 GT25 GT23 GT21 07W GT21 05Q GT21 04R GT21 03P 04P ET/R4 GT21 03P 04P R4 GT21 03P 04P R2 GS25 GS21	☞ Page 459 Connection to ACPU (AnCPU type)

6

Series	Model name	Clock	Communication type	Connectable model	Refer to
MELSEC-A (AnSCPU)	A2USCPU	○	RS-232 RS-422	GT27 GT25 GT23 GT21 07W GT21 05Q GT21 04R GT21 03P 04P ET/R4 GT21 03P 04P R4 GT21 03P 04P R2 GS25 GS21	☞ Page 461 Connection to ACPU (AnSCPU type, A0J2HCPU, A2CCPUC)
	A2USCPU-S1				
	A2USHCPU-S1				
	A1SCPU				
	A1SCPUC24-R2 *7				
	A1SHCPU*8				
	A2SCPU*8				
	A2SCPU-S1*8				
	A2SHCPU*8				
	A2SHCPU-S1*8				
	A1SJCPU				
	A1SJCPU-S3				
	A1SJHCPU*8				
MELSEC-A	A0J2HCPU*8	×	RS-232 RS-422	GT27 GT25 GT23 GT21 07W GT21 05Q GT21 04R GT21 03P 04P ET/R4 GT21 03P 04P R4 GT21 03P 04P R2 GS25 GS21	☞ Page 461 Connection to ACPU (AnSCPU type, A0J2HCPU, A2CCPUC)
	A0J2HCPUP21*8				
	A0J2HCPUR21*8				
	A0J2HCPU-DC24*8				
	A2CCPU	○	-	-	-
	A2CCPUP21				
	A2CCPUR21				
	A2CCPUC24	○	RS-232 RS-422	GT27 GT25 GT23 GT21 07W GT21 05Q GT21 04R GT21 03P 04P ET/R4 GT21 03P 04P R4 GT21 03P 04P R2 GS25 GS21	☞ Page 461 Connection to ACPU (AnSCPU type, A0J2HCPU, A2CCPUC)
	A2CCPUC24-PRF				
	A2CJCPU-S3	○	-	-	-
	A1FXCPU				
Motion CPU (Q Series)	Q172CPU *9*10	○	RS-232 RS-422	GT27 GT25 GT23 GT21 07W GT21 05Q GT21 04R GT21 03P 04P ET/R4 GT21 03P 04P R4 GT21 03P 04P R2 GS25 GS21	☞ Page 448 Connection to QCPU (Q mode)
	Q173CPU *9*10				
	Q172CPUN *9				
	Q173CPUN *9				
	Q172HCPU				
	Q173HCPU				
	Q172DCPU				
	Q173DCPU				
	Q172DCPU-S1				
	Q173DCPU-S1				
	Q172DSCPU				
	Q173DSCPU				
	Q170MCPU *11				
	Q170MSCPU *12				
	Q170MSCPU-S1 *12				
	MR-MQ100	○	-	-	-

Series	Model name	Clock	Communication type	Connectable model	Refer to
Motion CPU (A Series)	A273UCPU	○	RS-232 RS-422	GT 27 GT 25 GT 23 GS 25	☞ Page 459 Connection to ACPU (AnCPU type)
	A273UHCPU				
	A273UHCPU-S3				
	A373UCPU				
	A373UCPU-S3				
	A171SCPU	○	RS-232 RS-422	GT 27 GT 25 GT 23 GS 25	☞ Page 461 Connection to ACPU (AnSCPU type, A0J2HCPU, A2CCPUC)
	A171SCPU-S3				
	A171SCPU-S3N				
	A171SHCPU*13				
	A171SHCPUN*13				
	A172SHCPU*13				
	A172SHCPUN*13				
	A173UHCPU				
	A173UHCPU-S1				
MELSEC-WS	WS0-CPU0	×	-	-	-
	WS0-CPU1				
	WS0-CPU3				
MELSECNET/ HRemote I/O station	QJ72LP25-25	×	RS-232 RS-422	GT 27 GT 25 GT 23 GS 25	☞ Page 448 Connection to QCPU (Q mode)
	QJ72LP25G				
	QJ72BR15				
CC-Link IE Field Network head module	LJ72GF15-T2	×	RS-232 RS-422	GT 27 GT 25 GT 23 GT 21 07W GT 21 05Q GT 21 04R GT 21 03P 04P ET/R4 GT 21 03P 04P R4 GT 21 03P 04P R2 GS 25 GS 21	☞ Page 450 Connection to LCPU
CC-Link IE Field Network Ethernet adapter module	NZ2GF-ETB	×	-	-	-
CNC C70	Q173NCCPU	○	RS-232 RS-422	GT 27 GT 25 GT 23 GS 25	☞ Page 448 Connection to QCPU (Q mode)
Robot controller (Q Series)	CRnQ-700 (Q172DRCPU) CR750-Q (Q172DRCPU) CR751-Q (Q172DRCPU) CR800-Q (Q172DSRCPU)	○	RS-232 RS-422	GT 27 GT 25 GT 23 GT 21 07W GT 21 05Q GT 21 04R GT 21 03P 04P ET/R4 GT 21 03P 04P R4 GT 21 03P 04P R2 GS 25 GS 21	☞ Page 448 Connection to QCPU (Q mode)
MELSEC-FX	FX0	×	-	-	-
	FX0S				
	FX0N				
	FX1				
	FX2	×			
	FX2C				
	FX1S	○			
	FX1N				
	FX2N				
	FX1NC				
	FX2NC	×			
	FX3S	○			
	FX3G				
	FX3GC				
	FX3GE				
	FX3U				
	FX3UC				

*1 Mount a redundant function module R6RFM next to the RnPCPU on the base unit when building a redundant system.
*2 Mount a safety function module R6SFM next to the RnSFCPU on the base unit.
The RnSFCPU and the safety function module R6SFM must have the same pair version.
If their pair versions differ, the RnSFCPU does not operate.
*3 Use the serial port of a serial communication module controlled by another CPU on the multiple CPU.
*4 When in multiple CPU system configuration, use CPU function version B or later.
*5 Use only modules with the upper five digits of the serial No. later than 12042.
*6 If the A series computer link module is applied to the QnACPU, the GOT can monitor the devices in the same range on AnACPU.
However, the following devices cannot be monitored.
• Devices added to QnACPU
• Latch relays (L) and step relays (S)
(In case of QnACPU, the latch relay (L) and step relay (S) are different from the internal relay. However, whichever is specified, an access is made to the internal relay.)
• File register (R)
*7 Use hardware version C or later, software version E or later.
*8 The computer link module version U or later supports the A2SCPU(S1), A2SHCPU(S1), A1SHCPU, A1SJHCPU and A0J2HCPU(P21/R21/-DC24).
In addition, A0J2-C214-S1 (A0J2HCPU-dedicated computer link module) cannot be used.
*9 When using SV13, SV22, or SV43, use a Motion CPU with the following version of OS installed.
• SW6RN-SV13Q□: 00H or later
• SW6RN-SV22Q□: 00H or later
• SW6RN-SV43Q□: 00B or later
*10 Use main modules with the following product numbers.
• Q172CPU: Product number N******* or later
• Q173CPU: Product number M******* or later
*11 Only the first step can be used on the extension base unit (Q52B/Q55B).
*12 The extension base unit (Q5□B/Q6□B) can be used.
*13 For serial communication connection of A171SHCPU(N) and A172SHCPU(N), use the computer link module whose software version is version U or later.

Serial communication module/Computer link module

CPU series	Model name[*1]
MELSEC iQ-R Series Motion CPU (MELSEC iQ-R Series) C Controller module (MELSEC iQ-R Series)[*7] MELSECWinCPU (MELSEC iQ-R Series)[*7] CNC C80 CR800-R(R16RTCPU) CC-Link IE Field Network head module (MELSEC iQ-R Series)	RJ71C24[*9], RJ71C24-R2[*9], RJ71C24-R4[*9]
MELSEC-Q (Q mode) Motion CPU (Q Series) MELSECNET/H remote I/O station CNC C70 Robot controller (CRnQ-700) CR800-Q (Q172DSRCPU) C Controller module (MELSEC-Q Series)	QJ71C24[*2], QJ71C24-R2[*2]
	QJ71C24N, QJ71C24N-R2, QJ71C24N-R4
	QJ71CMO[*3], QJ71CMON[*3]
MELSEC-L CC-Link IE Field Network head module (MELSEC-L Series)	LJ71C24, LJ71C24-R2
MELSEC-Q (A mode)	A1SJ71UC24-R2, A1SJ71UC24-R4, A1SJ71UC24-PRF
	A1SJ71C24-R2, A1SJ71C24-R4, A1SJ71C24-PRF
MELSEC-QnA (QnACPU) MELSEC-QnA (QnASCPU)	AJ71QC24[*4], AJ71QC24-R2[*4], AJ71QC24-R4[*4]
	AJ71QC24N[*4], AJ71QC24N-R2[*4], AJ71QC24N-R4[*4]
	A1SJ71QC24 [*4*10], A1SJ71QC24-R2 [*4*10]
	A1SJ71QC24N [*4*10], A1SJ71QC24N-R2 [*4*10]
	A1SJ71QC24N1 [*4*10], A1SJ71QC24N1-R2 [*4*10]
	AJ71UC24[*4*6]
	A1SJ71C24-R2 [*6*10], A1SJ71C24-R4 [*6*10], A1SJ71C24-PRF [*6*10]
	A1SJ71UC24-R2 [*6*10], A1SJ71UC24-R4 [*6*10], A1SJ71C24-PRF [*6*10]
MELSEC-A (AnCPU) MELSEC-A (AnSCPU) Motion CPU (A Series)	AJ71UC24[*4*5]
	A1SJ71UC24-R2 [*5*11], A1SJ71UC24-R4 [*5*11], A1SJ71UC24-PRF [*5*11]
	A1SJ71C24-R2 [*5*11], A1SJ71C24-R4 [*5*11], A1SJ71C24-PRF [*5*11]
	A1SCPUC24-R2 [*8*11]
	A2CCPUC24[*4], A2CCPUC24-PRF[*4]

*1 Communication cannot be performed with RS-485.
A0J2-C214-S1 cannot be used.
*2 Either CH1 or CH2 can be used for the function version A. Both CH1 and CH2 can be used together for the function version B or later.
*3 Only CH2 can be connected.
*4 Either CH1 or CH2 can be used.
*5 The computer link module version U or later supports the A2SCPU(S1), A2SHCPU(S1), A1SHCPU, A1SJHCPU and A0J2HCPU.
*6 The module operates in the device range on AnACPU.
*7 Use the serial port of a serial communication module controlled by another CPU on the multiple CPU.
*8 Use hardware version C or later, software version E or later.
*9 Use firmware version 07 or higher when building a redundant system.
*10 Only available for MELSEC-QnA (QnASCPU).
*11 Only available for MELSEC-Q (A mode), MELSEC-A (AnSCPU), and Motion CPU (A series) small type.

6.2 System Configuration

Connection to MELSEC iQ-R series

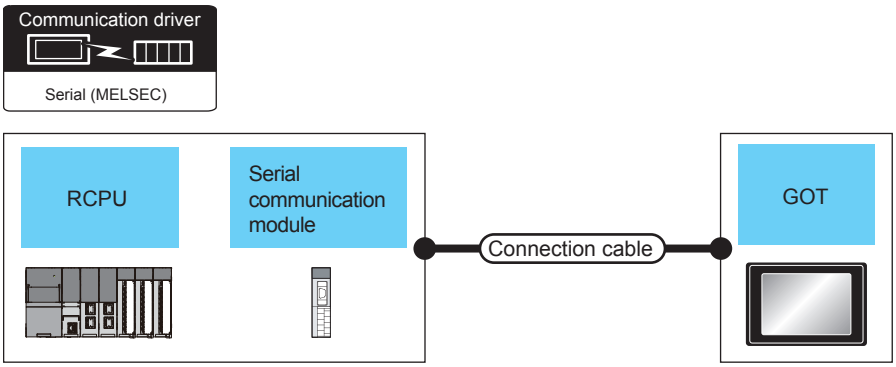

PLC			Connection cable		GOT		Number of connectable equipment
Model name	**Serial communication module*1**	**Communication type**	**Cable model**	**Max. distance**	**Option device*3**	**Model**	
MELSEC iQ-R Series Motion CPU (MELSEC iQ-R Series) C Controller module (MELSEC iQ-R Series) MELSECWinCPU (MELSEC iQ-R Series) CNC C80 (R16NCCPU-S1)	RJ71C24 RJ71C24-R2	RS-232	GT09-C30R2-9P(3m) or User preparing Page 463 RS-232 connection diagram 1)	15m	- (Built into GOT)	GT27 GT25 GT23 GT21 07W GT21 05Q GS25 GS21	2 GOTs for 1 serial communication module
					GT15-RS2-9P	GT27 GT25	
					GT10-C02H-6PT9P*2	GT21 03P 04P R4 GT21 03P 04P R2	
			User preparing Page 464 RS-232 connection diagram 3)	15m	- (Built into GOT)	GT21 04R GT21 03P 04P R2	
	RJ71C24 RJ71C24-R4	RS-422	GT09-C30R4-6C(3m) GT09-C100R4-6C(10m) GT09-C200R4-6C(20m) GT09-C300R4-6C(30m) or User preparing Page 466 RS-422 connection diagram 1)	1200m	- (Built into GOT)	GT27 GT25 GT23 GT21 07W GT21 05Q GS25 GS21	
					GT15-RS4-9S	GT27 GT25	
					GT10-C02H-9SC	GT21 04R GT21 03P 04P R4	
			User preparing Page 466 RS-422 connection diagram 2)	1200m	- (Built into GOT)	GT21 04R GT21 03P 04P ET/R4 GT21 03P 04P R4	

*1 For details on the system configuration on the serial communication module side, refer to the following manual.
Manuals of MELSEC iQ-R Series
*2 When a GT10-C02H-6PT9P unit of the sub version A or B is used, do not ground the case of the D-sub (9-pin) connector.
*3 GT25-W and GT2505-V do not support option devices.

Connection to QCPU (Q mode)

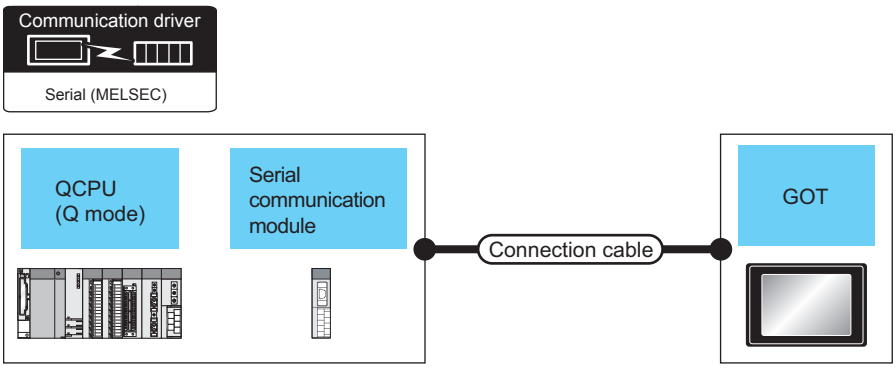

PLC			Connection cable		GOT		Number of connectable equipment
Model name	**Serial communication module*1**	**Communication type**	**Cable model**	**Max. distance**	**Option device*5**	**Model**	
MELSEC-Q (Q mode)	QJ71C24 QJ71C24N QJ71C24-R2 QJ71C24N-R2 QJ71CMO QJ71CMON	RS-232	GT09-C30R2-9P(3m) or User preparing Page 463 RS-232 connection diagram 1)	15m	- (Built into GOT)	GT27 GT25 GT23 GT21 07W GT21 05Q GS25 GS21	2 GOTs for 1 serial communication module*2 1 GOT for 1 modem interface module
					GT15-RS2-9P	GT27 GT25	
					GT10-C02H-6PT9P*4	GT21 03P 04P R4 GT21 03P 04P R2	
					GT01-RS4-M*3	-	
			User preparing Page 464 RS-232 connection diagram 3)	15m	- (Built into GOT)	GT21 04R GT21 03P 04P R2	
	QJ71C24 QJ71C24N QJ71C24N-R4	RS-422	GT09-C30R4-6C(3m) GT09-C100R4-6C(10m) GT09-C200R4-6C(20m) GT09-C300R4-6C(30m) or User preparing Page 466 RS-422 connection diagram 1)	1200m	- (Built into GOT)	GT27 GT25 GT23 GT21 07W GT21 05Q GS25 GS21	
					GT15-RS4-9S	GT27 GT25	
					GT10-C02H-9SC	GT21 04R GT21 03P 04P R4	
				500m	GT01-RS4-M*3	-	
			User preparing Page 466 RS-422 connection diagram 2)	1200m	- (Built into GOT)	GT21 04R GT21 03P 04P ET/R4 GT21 03P 04P R4	

*1 For details on the system configuration on the serial communication module side, refer to the following manual.
📖Q Corresponding Serial Communication Module User's Manual (Basic)
For details on the system configuration on the modem interface module side, refer to the following manual.
📖Modem Interface Module User's Manual
*2 Two GOTs can be connected with the function version B or later of the serial communication module.
*3 For details of the GOT multi-drop connection, refer to the following.
☞ Page 1027 LASER DISPLACEMENT SENSOR MH11 CONNECTION
*4 When a GT10-C02H-6PT9P unit of the sub version A or B is used, do not ground the case of the D-sub (9-pin) connector.
*5 GT25-W and GT2505-V do not support option devices.

Connection to LCPU

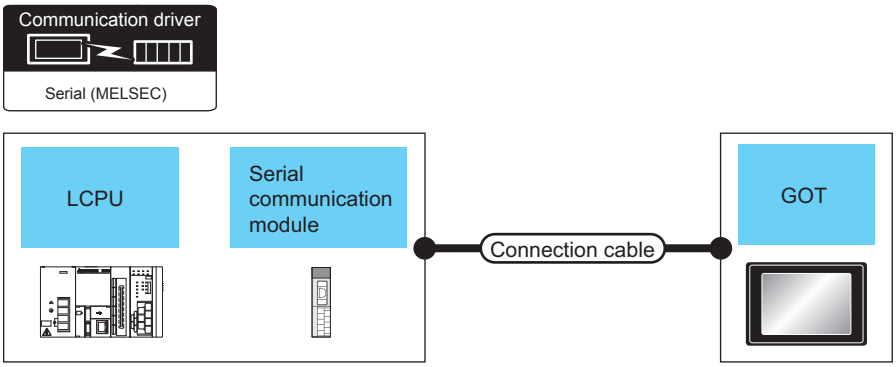

PLC			Connection cable		GOT		Number of connectable equipment
Model name	Serial communication module*1	Communication type	Cable model	Max. distance	Option device*4	Model	
MELSEC-L	LJ71C24 LJ71C24-R2	RS-232	GT09-C30R2-9P(3m) or User preparing Page 463 RS-232 connection diagram 2)	15m	- (Built into GOT)	GT27 GT25 GT23 GT21 07W GT21 05Q GS25 GS21	2 GOTs for 1 serial communication module
					GT15-RS2-9P	GT27 GT25	
					GT10-C02H-6PT9P*3	GT21 03P 04P R4 GT21 03P 04P R2	
					GT01-RS4-M*2	-	
			User preparing Page 464 RS-232 connection diagram 3)	15m	- (Built into GOT)	GT21 04R GT21 03P 04P R2	
	LJ71C24	RS-422	GT09-C30R4-6C(3m) GT09-C100R4-6C(10m) GT09-C200R4-6C(20m) GT09-C300R4-6C(30m) or User preparing Page 466 RS-422 connection diagram 1)	1200m	- (Built into GOT)	GT27 GT25 GT23 GT21 07W GT21 05Q GS25 GS21	
					GT15-RS4-9S	GT27 GT25	
					GT10-C02H-9SC	GT21 04R GT21 03P 04P R4	
				500m	GT01-RS4-M*2	-	
			User preparing Page 466 RS-422 connection diagram 2)	1200m	- (Built into GOT)	GT21 04R GT21 03P 04P ET/R4 GT21 03P 04P R4	

*1 For details on the system configuration on the serial communication module side, refer to the following manual.
📖MELSEC-L Serial Communication Module User's Manual (Basic)

*2 For details of the GOT multi-drop connection, refer to the following.
☞ Page 1027 LASER DISPLACEMENT SENSOR MH11 CONNECTION

*3 When a GT10-C02H-6PT9P unit of the sub version A or B is used, do not ground the case of the D-sub (9-pin) connector.

*4 GT25-W and GT2505-V do not support option devices.

Connection to QCPU (A mode)

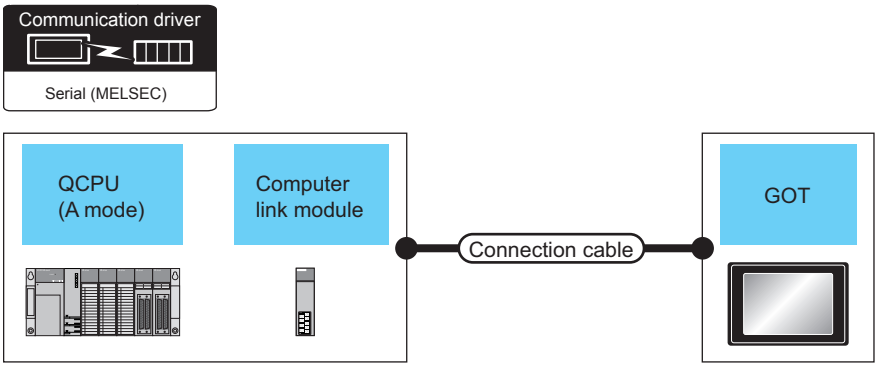

PLC			Connection cable		GOT		Number of connectable equipment
Model name	Computer link module*1	Communication type	Cable model	Max. distance	Option device*3	Model	
MELSEC-Q (A mode)	A1SJ71UC24-R2 A1SJ71C24-R2 A1SJ71UC24-PRF A1SJ71C24-PRF	RS-232	GT09-C30R2-9P(3m) or User preparing Page 463 RS-232 connection diagram 1)	15m	- (Built into GOT)	GT27 GT25 GT23 GT21 07W GT21 05Q GS25 GS21	1 GOT for 1 computer link module
					GT15-RS2-9P	GT27 GT25	
					GT10-C02H-6PT9P*2	GT21 03P 04P R4 GT21 03P 04P R2	
			User preparing Page 464 RS-232 connection diagram 3)	15m	- (Built into GOT)	GT21 04R GT21 03P 04P R2	
	A1SJ71UC24-R4 A1SJ71C24-R4	RS-422	GT09-C30R4-6C(3m) GT09-C100R4-6C(10m) GT09-C200R4-6C(20m) GT09-C300R4-6C(30m) or User preparing Page 466 RS-422 connection diagram 1)	500m	- (Built into GOT)	GT27 GT25 GT23 GT21 07W GT21 05Q GS25 GS21	
					GT15-RS4-9S	GT27 GT25	
					GT10-C02H-9SC	GT21 04R GT21 03P 04P R4	
			User preparing Page 466 RS-422 connection diagram 2)	500m	- (Built into GOT)	GT21 04R GT21 03P 04P ET/R4 GT21 03P 04P R4	

*1 For the system configuration on the computer link module side, refer to the following manual.
Computer Link Module (Com. link func./Print. func.) User's Manual

*2 When a GT10-C02H-6PT9P unit of the sub version A or B is used, do not ground the case of the D-sub (9-pin) connector.

*3 GT25-W and GT2505-V do not support option devices.

Connection to QnACPU (QnACPU type)

Communication driver
AJ71QC24,MELDAS C6*
(When connecting to a serial communication module)

Communication driver
AJ71C24/UC24
(When connecting to a computer link module)

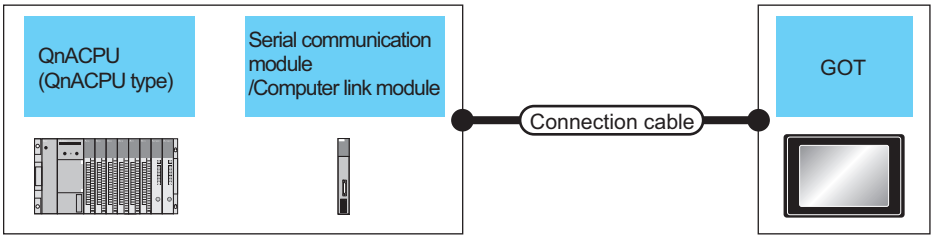

PLC			Connection cable		GOT		Number of connectable equipment
Model name	**Serial communication module*1 Computer link module**	**Communication type**	**Cable model**	**Max. distance**	**Option device*6**	**Model**	
MELSEC-QnA (QnACPU)	AJ71QC24 AJ71QC24N AJ71QC24-R2 AJ71QC24N-R2	RS-232	GT09-C30R2-25P(3m) or User preparing Page 463 RS-232 connection diagram 2)	15m	- (Built into GT)	GT27 GT25 GT23 GT21 07W GT21 05Q GS25 GS21	1 GOT for 1 serial communication module
					GT15-RS2-9P	GT27 GT25	
					GT10-C02H-6PT9P*5	GT21 03P 04P R4 GT21 03P 04P R2	
					GT01-RS4-M*2	-	
			User preparing Page 465 RS-232 connection diagram 4)	15m	- (Built into GT)	GT21 04R GT21 03P 04P R2	

6

PLC			Connection cable		GOT		Number of connectable equipment
Model name	Serial communication module*1 Computer link module	Communication type	Cable model	Max. distance	Option device*6	Model	
MELSEC-QnA (QnACPU)	AJ71QC24-R4 AJ71QC24N-R4	RS-422	GT01-C30R4-25P(3m) GT01-C100R4-25P(10m) GT01-C200R4-25P(20m) GT01-C300R4-25P(30m)	30m	- (Built into GOT)	GT27 GT25 GT23 GT21 07W GT21 05Q GS25 GS21	1 GOT for 1 serial communication module
					GT15-RS4-9S	GT27 GT25	
					GT10-C02H-9SC	GT21 04R GT21 03P 04P R4	
					GT01-RS4-M*2	-	
			GT21-C30R4-25P5(3m) GT21-C100R4-25P5(10m) GT21-C200R4-25P5(20m) GT21-C300R4-25P5(30m)*4	30m	- (Built into GOT)	GT21 03P 04P ET/R4	
			GT10-C30R4-25P(3m) GT10-C100R4-25P(10m) GT10-C200R4-25P(20m) GT10-C300R4-25P(30m)*3	30m	- (Built into GOT)	GT21 04R GT21 03P 04P R4	
	AJ71QC24 AJ71QC24N AJ71QC24-R4 AJ71QC24N-R4	RS-422	GT09-C30R4-6C(3m) GT09-C100R4-6C(10m) GT09-C200R4-6C(20m) GT09-C300R4-6C(30m) or User preparing Page 466 RS-422 connection diagram 1)	1200m	- (Built into GOT)	GT27 GT25 GT23 GT21 07W GT21 05Q GS25 GS21	
					GT15-RS4-9S	GT27 GT25	
					GT10-C02H-9SC	GT21 04R GT21 03P 04P R4	
					GT01-RS4-M*2	-	
			User preparing Page 466 RS-422 connection diagram 2)	1200m	- (Built into GOT)	GT21 04R GT21 03P 04P ET/R4 GT21 03P 04P R4	

*1 For details on the system configuration on the serial communication module side, refer to the following manual.
Serial Communications Module User's Manual (Modem Function Additional Version)

*2 For details of the GOT multi-drop connection, refer to the following.
☞ Page 1027 LASER DISPLACEMENT SENSOR MH11 CONNECTION

*3 For the connection to GOT, refer to the connection diagram.
☞ Page 466 RS-422 connection diagram 3)

*4 For the connection to GOT, refer to the connection diagram.
☞ Page 467 RS-422 connection diagram 4)

*5 When a GT10-C02H-6PT9P unit of the sub version A or B is used, do not ground the case of the D-sub (9-pin) connector.

*6 GT25-W and GT2505-V do not support option devices.

PLC			Connection cable		GOT		Number of connectable equipment
Model name	Computer link module*1	Communication type	Cable model	Max. distance	Option device*4	Model	
MELSEC-QnA (QnACPU)	AJ71UC24	RS-232	GT09-C30R2-25P(3m) or User preparing Page 463 RS-232 connection diagram 2)	15m	- (Built into GOT)	GT27 GT25 GT23 GT21 07W GT21 05Q GS25 GS21	1 GOT for 1 computer link module
					GT15-RS2-9P	GT27 GT25	
					GT10-C02H-6PT9P*3	GT21 03P 04P R4 GT21 03P 04P R2	
					GT01-RS4-M*2	-	
			User preparing Page 465 RS-232 connection diagram 4)	15m	- (Built into GOT)	GT21 04R GT21 03P 04P R2	
	AJ71UC24	RS-422	GT09-C30R4-6C(3m) GT09-C100R4-6C(10m) GT09-C200R4-6C(20m) GT09-C300R4-6C(30m) or User preparing Page 466 RS-422 connection diagram 1)	500m	- (Built into GOT)	GT27 GT25 GT23 GT21 07W GT21 05Q GS25 GS21	
					GT15-RS4-9S	GT27 GT25	
					GT10-C02H-9SC	GT21 04R GT21 03P 04P R4	
					GT01-RS4-M*2	-	
			User preparing Page 466 RS-422 connection diagram 2)	500m	- (Built into GOT)	GT21 04R GT21 03P 04P ET/R4 GT21 03P 04P R4	

*1 For the system configuration on the computer link module side, refer to the following manual.
Computer Link Module (Com. link func./Print. func.) User's Manual
When connecting to a computer link module, set the communication driver to [AJ71C24/UC24].

*2 For details of the GOT multi-drop connection, refer to the following.
Page 1027 LASER DISPLACEMENT SENSOR MH11 CONNECTION

*3 When a GT10-C02H-6PT9P unit of the sub version A or B is used, do not ground the case of the D-sub (9-pin) connector.

*4 GT25-W and GT2505-V do not support option devices.

Connection to QnACPU (QnASCPU type)

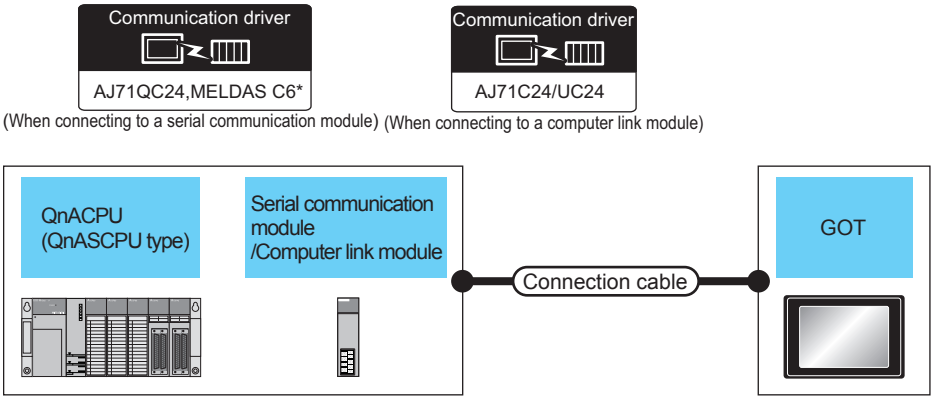

PLC			Connection cable		GOT		Number of connectable equipment
Model name	**Serial communication module*1**	**Communication type**	**Cable model**	**Max. distance**	**Option device*4**	**Model**	
MELSEC-QnA (QnASCPU)	A1SJ71QC24 A1SJ71QC24N A1SJ71QC24N1 A1SJ71QC24-R2 A1SJ71QC24N-R2 A1SJ71QC24N1-R2	RS-232	GT09-C30R2-9P(3m) or User preparing Page 463 RS-232 connection diagram 1)	15m	- (Built into GT27, GT25, GT23, GT21-07W, GT21-05Q, GS25, GS21)	GT27 GT25 GT23 GT21-07W GT21-05Q GS25 GS21	1 GT for 1 serial communication module
					GT15-RS2-9P	GT27 GT25	
					GT10-C02H-6PT9P*3	GT21-03P-04P-R4 GT21-03P-04P-R2	
					GT01-RS4-M*2	-	
			User preparing Page 464 RS-232 connection diagram 3)	15m	- (Built into GT21-04R)	GT21-04R GT21-03P-04P-R2	

*1 For details on the system configuration on the serial communication module side, refer to the following manual.
Serial Communication Module User's Manual (Modem Function Additional Version)

*2 For details of the GOT multi-drop connection, refer to the following.
Page 1027 LASER DISPLACEMENT SENSOR MH11 CONNECTION

*3 When a GT10-C02H-6PT9P unit of the sub version A or B is used, do not ground the case of the D-sub (9-pin) connector.

*4 GT25-W and GT2505-V do not support option devices.

PLC			Connection cable		GOT		Number of connectable equipment
Model name	Serial communication module/Computer link module*1	Communication type	Cable model	Max. distance	Option device*4	Model	
MELSEC-QnA (QnASCPU)	A1SJ71QC24 A1SJ71QC24N A1SJ71QC24N1	RS-422	GT09-C30R4-6C(3m) GT09-C100R4-6C(10m) GT09-C200R4-6C(20m) GT09-C300R4-6C(30m) or User preparing Page 466 RS-422 connection diagram 1)	1200m	- (Built into GOT)	GT27 GT25 GT23 GT21 07W GT21 05Q GS25 GS21	1 GOT for 1 serial communication module
					GT15-RS4-9S	GT27 GT25	
					GT10-C02H-9SC	GT21 04R GT21 03P 04P R4	
				500m	GT01-RS4-M*2	-	
			User preparing Page 466 RS-422 connection diagram 2)	1200m	- (Built into GOT)	GT21 04R GT21 03P 04P ET/R4 GT21 03P 04P R4	
	A1SJ71UC24-R2 A1SJ71C24-R2 A1SJ71UC24-PRF A1SJ71C24-PRF	RS-232	GT09-C30R2-9P(3m) or User preparing Page 463 RS-232 connection diagram 1)	15m	- (Built into GOT)	GT27 GT25 GT23 GT21 07W GT21 05Q GS25 GS21	1 GOT for 1 computer link module
					GT15-RS2-9P	GT27 GT25	
					GT10-C02H-6PT9P*3	GT21 03P 04P R4 GT21 03P 04P R2	
					GT01-RS4-M*2	-	
			User preparing Page 464 RS-232 connection diagram 3)	15m	- (Built into GOT)	GT21 04R GT21 03P 04P R2	

6

PLC			Connection cable		GOT		Number of connectable equipment
Model name	Serial communication module/Computer link module*1	Communication type	Cable model	Max. distance	Option device*4	Model	
MELSEC-QnA (QnASCPU)	A1SJ71UC24-R4 A1SJ71C24-R4	RS-422	GT09-C30R4-6C(3m) GT09-C100R4-6C(10m) GT09-C200R4-6C(20m) GT09-C300R4-6C(30m) or User preparing Page 466 RS-422 connection diagram 1)	500m	- (Built into GOT)	GT27 GT25 GT23 GT21 07W GT21 05Q GS25 GS21	1 GOT for 1 computer link module
					GT15-RS4-9S	GT27 GT25	
					GT10-C02H-9SC	GT21 04R GT21 03P 04P R4	
					GT01-RS4-M*2	-	
			User preparing Page 466 RS-422 connection diagram 2)	500m	- (Built into GOT)	GT21 04R GT21 03P 04P ET/R4 GT21 03P 04P R4	

*1 For details on the system configuration on the serial communication module side, refer to the following manual.
Serial Communication Module User's Manual (Modem Function Additional Version)
For the system configuration on the computer link module side, refer to the following manual.
Computer Link Module (Com. link func./Print. func.) User's Manual
When connecting to a computer link module, set the communication driver to [AJ71C24/UC24].

*2 For details of the GOT multi-drop connection, refer to the following.
Page 1027 LASER DISPLACEMENT SENSOR MH11 CONNECTION

*3 When a GT10-C02H-6PT9P unit of the sub version A or B is used, do not ground the case of the D-sub (9-pin) connector.

*4 GT25-W and GT2505-V do not support option devices.

Connection to ACPU (AnCPU type)

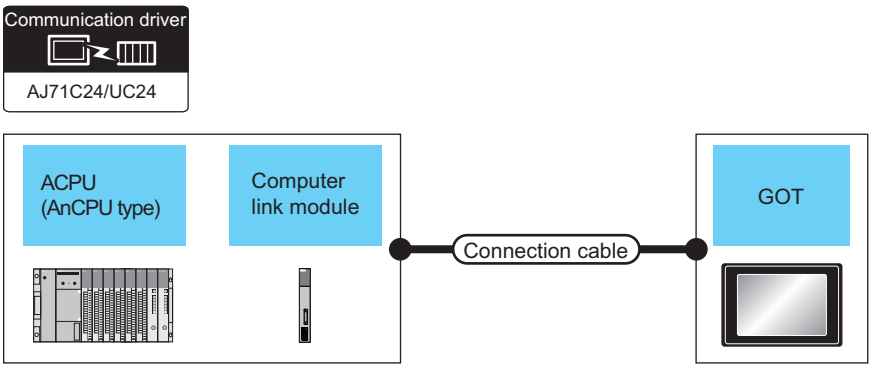

PLC			Connection cable		GOT		Number of connectable equipment
Model name	Computer link module*1	Communication type	Cable model	Max. distance	Option device*3	Model	
MELSEC-A (AnCPU)	AJ71UC24	RS-232	GT09-C30R2-25P(3m) or User preparing Page 463 RS-232 connection diagram 2)	15m	- (Built into GOT)	GT27 GT25 GT23 GT21 07W GT21 05Q GS25 GS21	1 GOT for 1 computer link module
					GT15-RS2-9P	GT27 GT25	
					GT10-C02H-6PT9P*2	GT21 03P 04P R4 GT21 03P 04P R2	
			User preparing Page 465 RS-232 connection diagram 4)	15m	- (Built into GOT)	GT21 04R GT21 03P 04P R2	
	AJ71UC24	RS-422	GT09-C30R4-6C(3m) GT09-C100R4-6C(10m) GT09-C200R4-6C(20m) GT09-C300R4-6C(30m) or User preparing Page 466 RS-422 connection diagram 1)	500m	- (Built into GOT)	GT27 GT25 GT23 GT21 07W GT21 05Q GS25 GS21	
					GT15-RS4-9S	GT27 GT25	
					GT10-C02H-9SC	GT21 04R GT21 03P 04P R4	
			User preparing Page 466 RS-422 connection diagram 2)	500m	- (Built into GOT)	GT21 04R GT21 03P 04P ET/R4 GT21 03P 04P R4	

PLC			Connection cable		GOT		Number of connectable equipment
Model name	Computer link module*1	Communication type	Cable model	Max. distance	Option device*3	Model	
Motion CPU (A Series)	AJ71UC24	RS-232	GT09-C30R2-25P(3m) or User preparing Page 463 RS-232 connection diagram 2)	15m	- (Built into GOT)	GT27 GT25 GT23 GS25	1 GOT for 1 computer link module
					GT15-RS2-9P	GT27 GT25	
	AJ71UC24	RS-422	GT09-C30R4-6C(3m) GT09-C100R4-6C(10m) GT09-C200R4-6C(20m) GT09-C300R4-6C(30m) or User preparing Page 466 RS-422 connection diagram 1)	500m	- (Built into GOT)	GT27 GT25 GT23 GS25	
					GT15-RS4-9S	GT27 GT25	

*1 For the system configuration on the computer link module side, refer to the following manual.
Computer Link Module (Com. link func./Print. func.) User's Manual

*2 When a GT10-C02H-6PT9P unit of the sub version A or B is used, do not ground the case of the D-sub (9-pin) connector.

*3 GT25-W and GT2505-V do not support option devices.

Connection to ACPU (AnSCPU type, A0J2HCPU, A2CCPUC)

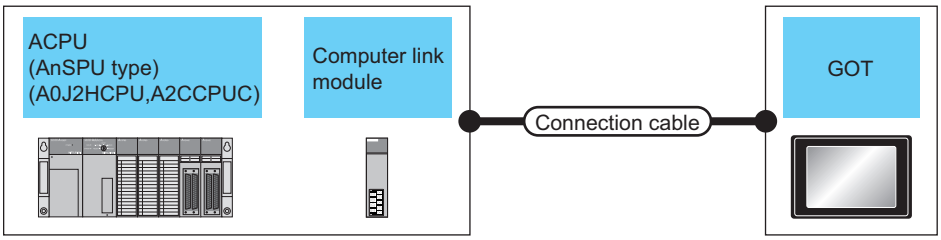

PLC			Connection cable		GOT		Number of connectable equipment
Model name	**Computer link module*1**	**Communication type**	**Cable model**	**Max. distance**	**Option device*3**	**Model**	
MELSEC-A (AnSCPU) (A0J2H) (A2CCPUC)	A1SJ71UC24-R2 A1SJ71C24-R2 A1SJ71UC24-PRF A1SJ71C24-PRF A1SCPUC24-R2 A2CCPUC24 A2CCPUC24-PRF	RS-232	GT09-C30R2-9P(3m) or User preparing Page 463 RS-232 connection diagram 1)	15m	- (Built into GT27, GT25, GT23, GT21 07W, GT21 05Q, GS25, GS21)		1 GOT for 1 computer link module
					GT15-RS2-9P	GT27, GT25	
					GT10-C02H-6PT9P*2	GT21 03P 04P R4, GT21 03P 04P R2	
			User preparing Page 464 RS-232 connection diagram 3)	15m	- (Built into GT)	GT21 04R, GT21 03P 04P R2	
	A1SJ71UC24-R4 A1SJ71C24-R4	RS-422	GT09-C30R4-6C(3m) GT09-C100R4-6C(10m) GT09-C200R4-6C(20m) GT09-C300R4-6C(30m) or User preparing Page 466 RS-422 connection diagram 1)	500m	- (Built into GT27, GT25, GT23, GT21 07W, GT21 05Q, GS25, GS21)		
					GT15-RS4-9S	GT27, GT25	
					GT10-C02H-9SC	GT21 04R, GT21 03P 04P R4	
			User preparing Page 466 RS-422 connection diagram 2)	500m	- (Built into GT)	GT21 04R, GT21 03P 04P ET/R4, GT21 03P 04P R4	

6

PLC			Connection cable		GOT		Number of connectable equipment
Model name	Computer link module*1	Communication type	Cable model	Max. distance	Option device*3	Model	
Motion CPU (A Series)	A1SJ71UC24-R2 A1SJ71C24-R2 A1SJ71UC24-PRF A1SJ71C24-PRF A1SCPUC24-R2 A2CCPUC24 A2CCPUC24-PRF	RS-232	GT09-C30R2-9P(3m) or User preparing Page 463 RS-232 connection diagram 1)	15m	- (Built into GT)	GT27 GT25 GT23 GS25	1 GOT for 1 computer link module
					GT15-RS2-9P	GT27 GT25	
	A1SJ71UC24-R4 A1SJ71C24-R4	RS-422	GT09-C30R4-6C(3m) GT09-C100R4-6C(10m) GT09-C200R4-6C(20m) GT09-C300R4-6C(30m) or User preparing Page 466 RS-422 connection diagram 1)	500m	- (Built into GT)	GT27 GT25 GT23 GS25	
					GT15-RS4-9S	GT27 GT25	

*1 For the system configuration on the computer link module side, refer to the following manual.
Computer Link Module (Com. link func./Print. func.) User's Manual

*2 When a GT10-C02H-6PT9P unit of the sub version A or B is used, do not ground the case of the D-sub (9-pin) connector.

*3 GT25-W and GT2505-V do not support option devices.

6.3 Connection Diagram

The following diagram shows the connection between the GOT and the PLC.

RS-232 cable

Connection diagram

■RS-232 connection diagram 1)

PLC side connector D-sub 9-pin

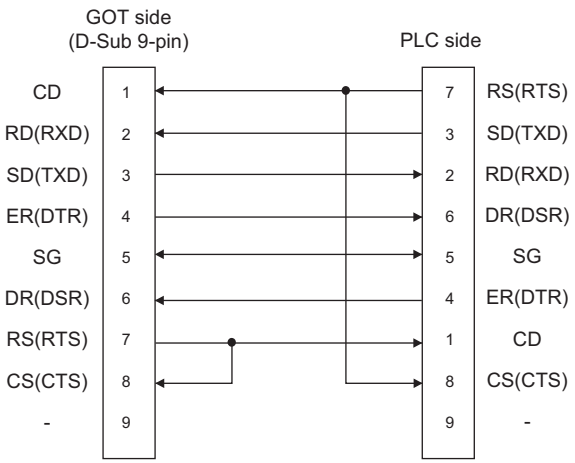

■RS-232 connection diagram 2)

PLC side connector D-sub 25-pin

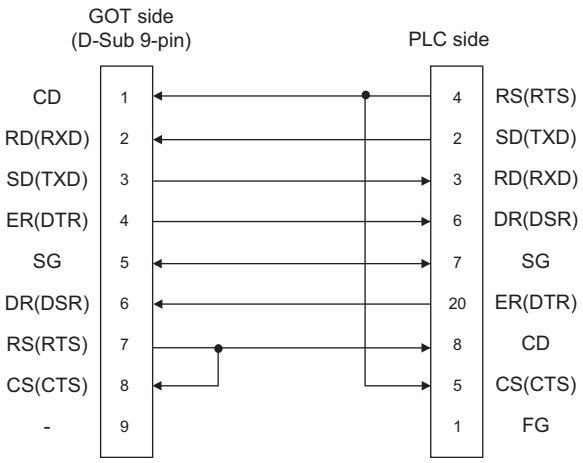

■RS-232 connection diagram 3)

PLC side connector D-sub 9-pin

For GT21

(When connecting to the R/Q/QnA/L Serial Communication Module)

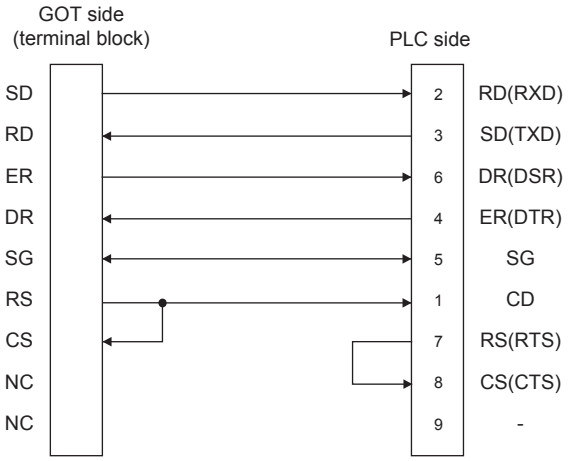

For GT21

(When connecting to the Computer Link Module)

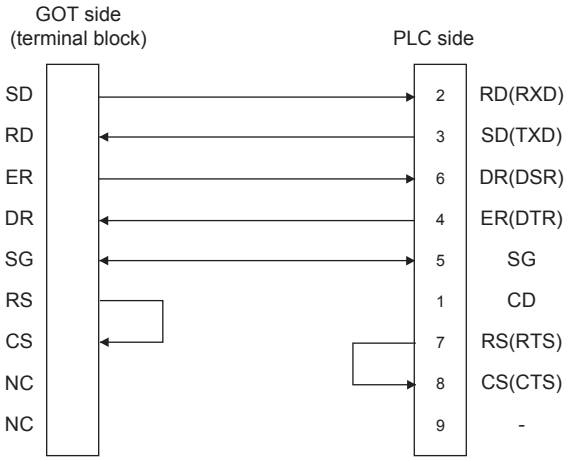

■RS-232 connection diagram 4)

PLC side connector D-sub 25-pin

For GT21

(When connecting to the R/Q/QnA Serial Communication Module)

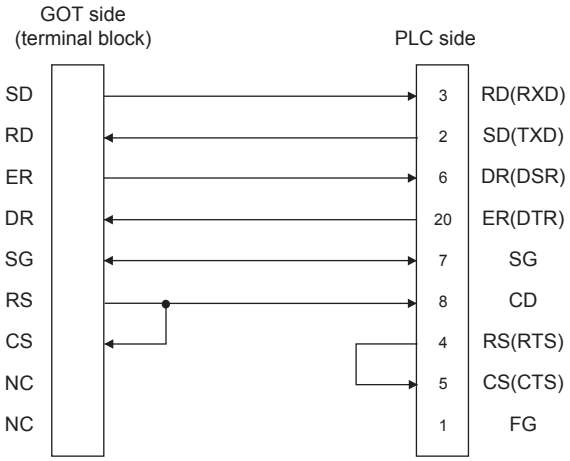

For GT21

(When connecting to the Computer Link Module)

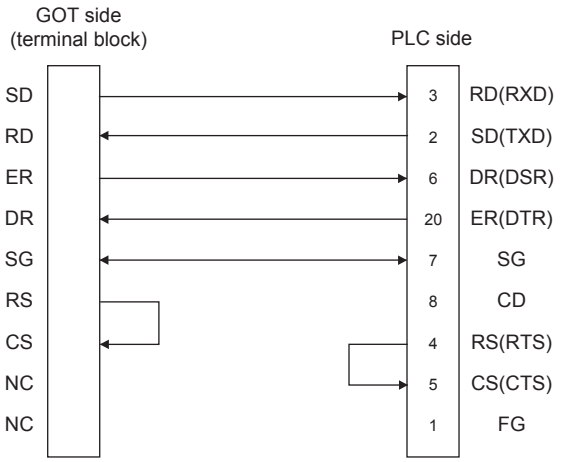

Precautions when preparing a cable

■Cable length

The length of the RS-232 cable must be 15m or less.

■GOT side connector

For the GOT side connector, refer to the following.

☞ Page 64 GOT connector specifications

RS-422 cable

Connection diagram

■RS-422 connection diagram 1)

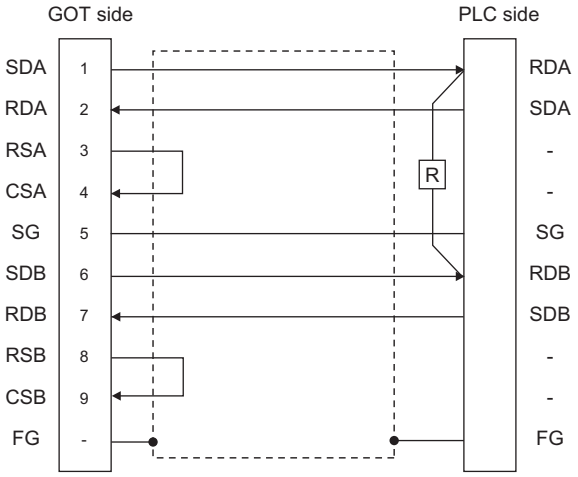

■RS-422 connection diagram 2)

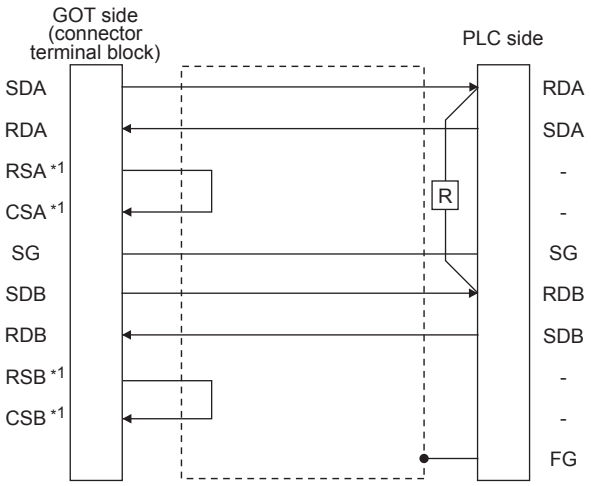

*1 The signals RSA, RSB, CSA, and CSB are not provided for GT2104-PMBD, GT2103-PMBD. Return connection is not required.

■RS-422 connection diagram 3)

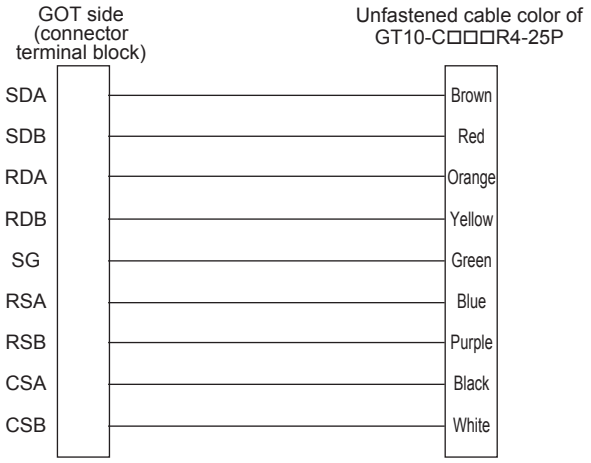

■RS-422 connection diagram 4)

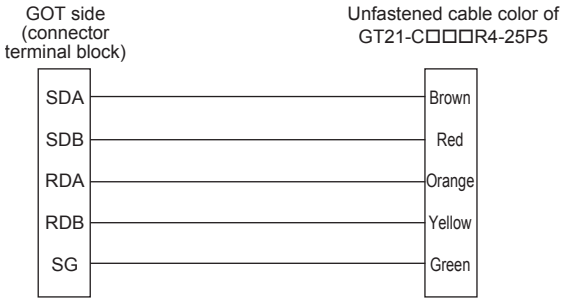

Precautions when preparing a cable

■Cable length

The length of the RS-422 cable must be within the maximum distance.

■GOT side connector

For the GOT side connector, refer to the following.

☞ Page 64 GOT connector specifications

Connecting terminating resistors

■GOT side

When connecting a PLC to the GOT, a terminating resistor must be connected to the GOT.

- For GT27, GT25 (except GT2505-V), GT23, GS25

Set the terminating resistor setting switch of the GOT main unit to "Disable".

- For GT2505-V, GT21

Set the terminating resistor selector to "330Ω".

- For GS21

Since the terminating resistor is fixed to 330 Ω, no setting is required for the terminating resistor.

For the procedure to set the terminating resistor, refer to the following.

☞ Page 68 Terminating resistors of GOT

■Serial communication module or computer link module side

Connect the terminating resistors (330Ω 1/4W (orange/orange/brown/□)) on the serial communication module or computer link module side. For details, refer to the following manual.

📖User's Manual for the serial communication module or computer link module

- Other than A2CCPUC24(-PRF)

Connect the terminating resistors supplied with the module across RDA and RDB.

- A2CCPUC24(-PRF)

Set TXD and RXD on the terminating resistor setting pin to "A".

6.4 GOT Side Settings

Setting communication interface (Controller Setting)

Set the channel of the connected equipment.

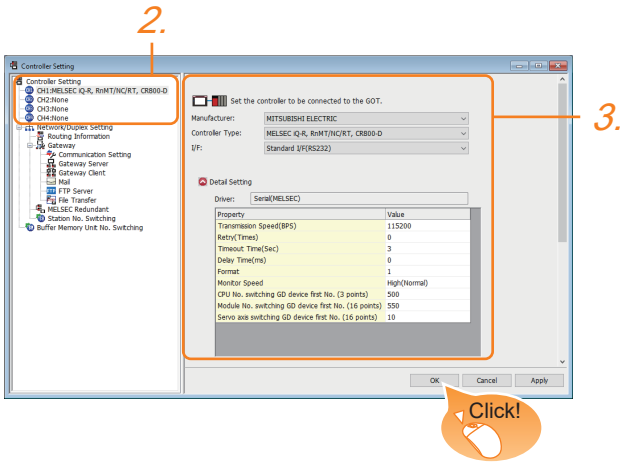

1. Select [Common] → [Controller Setting] from the menu.

2. In the [Controller Setting] window, select the channel No. to be used from the list menu.

3. Set the following items.

- [Manufacturer]: [MITSUBISHI ELECTRIC]
- [Controller Type]: Configure the setting according to the controller to be connected.
- [I/F]: Interface to be used
- [Driver]: Select one of the following items according to the controller to be connected.

<For GT27, GT25, GT23, GS25>

[Serial(MELSEC)]

[AJ71QC24, MELDAS C6*]

[AJ71C24/UC24]

<For GT21, GS21>

[Serial(MELSEC)]

[AJ71C24/UC24]

[MELSEC-FX]

- [Detail Setting]: Configure the settings according to the usage environment.

☞ Page 469 Communication detail settings

4. When you have completed the settings, click the [OK] button.

Point

The settings of connecting equipment can be confirmed in [I/F Communication Setting].
For details, refer to the following.
☞ Page 54 I/F communication setting

Communication detail settings

Make the settings according to the usage environment.

Serial (MELSEC)

The following settings are applicable to GT27, GT25, GT23, and GS25.

Property	Value
Transmission Speed(BPS)	115200
Retry(Times)	0
Timeout Time(Sec)	3
Delay Time(ms)	0
Format	1
Monitor Speed	High(Normal)
CPU No. switching GD device first No. (3 points)	500
Module No. switching GD device first No. (16 points)	550
Servo axis switching GD device first No. (16 points)	10

Item	Description	Range
Transmission Speed	Set this item when change the transmission speed used for communication with the connected equipment. (Default: 115200bps) When the setting exceeds the limit of the connected equipment, communication is performed at the fastest transmission speed supported by the connected equipment.	9600bps, 19200bps, 38400bps, 57600bps, 115200bps
Retry	Set the number of retries to be performed when a communication timeout occurs. When receiving no response after retries, the communication times out. (Default: 0time)	0 to 5times
Timeout Time	Set the time period for a communication to time out. (Default: 3sec)	1 to 30sec
Delay Time	Set this item to adjust the transmission timing of the communication request from the GOT. (Default: 0ms)	0 to 300 (ms)
Format*3	Select the communication format. (Default: 1)	1, 2
Monitor Speed*4	Set the monitor speed of the GOT. This setting is not valid in all systems. (Default: Normal)	High (Normal)*1 Middle Low*2
CPU No. switching GD device first No. (3 points)	Set the start device number of the GD devices for CPU No. switching. (Default: 500) For the details, refer to the following. ☞ Page 474 Start device number of the GD devices for CPU number switching	0 to 65520
Module No. switching GD device first No. (16 points)	Set the start device number of the GD devices for module No. switching. (Default: 550) For the details, refer to the following. ☞ Page 475 Start device number of the GD devices for module number switching	0 to 65520
Servo axis switching GD device first No. (16 points)	Set the servo axis switching GD device first No. (Default: 10) For the details, refer to the following. ☞ Page 476 Servo axis switching GD device first No.	0 to 65520

*1 This is effective when collecting a large data on other than the monitor screen (logging, recipe function, etc.). However, when connecting to Q00J/Q00/Q01CPU, the sequence scan time may be influenced. If you want to avoid the influence on the sequence scan time, do not set [High(Normal)].
(High performance is hardly affected)

*2 Set this item if you want to avoid the influence on the sequence scan time further than the [Middle] setting when connecting to Q00UJ/Q00U/Q01U/Q02UCPU or Q00J/Q00/Q01CPU.

*3 Set this item when replacing the F900 series with GOT2000 series.

- To change the communication settings of the serial communication module connected to an F900 model, set as follows.

The baud rate can be changed to 115200bps.

[Intelligent function module switch setting] of PLC

Switch No.	CH1 side	CH2 side
Switch 1	0000H	-
Switch 2	0000H	-
Switch 3	-	0000H
Switch 4	-	0000H
Switch 5	0000H	0000H

☞ Page 478 PLC Side Setting

GOT communication settings

Item	Set value
Format	1

- To maintain the communication settings of the serial communication module connected to an F900 model, set as follows.

The baud rate remains 38400bps.

GOT communication settings

Item	Set value
Format	2

*4 When using a global label, to read or write more than 235 two-byte characters, set the [Monitor speed] to [High (Standard)] or [Middle]. If [Monitor speed] is set to [Low], a system error occurs when reading or writing.
For details, refer to the following manual.
📖GT Designer3 (GOT2000) Screen Design Manual

AJ71QC24, MELDAS C6*

Property	Value
Transmission Speed(BPS)	19200
Data Bit	8 bit
Stop Bit	1 bit
Parity	Odd
Retry(Times)	0
Timeout Time(Sec)	3
Delay Time(ms)	0

Item	Description	Range
Transmission Speed	Set this item when change the transmission speed used for communication with the connected equipment. (Default: 19200bps)	4800bps, 9600bps, 19200bps, 38400bps, 57600bps, 115200bps
Data Bit	Set this item when change the data length used for communication with the connected equipment. (Default: 8bit)	8bit (fixed)
Stop Bit	Specify the stop bit length for communications. (Default: 1bit)	1bit (fixed)
Parity	Specify whether or not to perform a parity check, and how it is performed during communication. (Default: Odd)	Odd (fixed)
Retry	Set the number of retries to be performed when a communication timeout occurs. When receiving no response after retries, the communication times out. (Default: 0time)	0 to 5times
Timeout Time	Set the time period for a communication to time out. (Default: 3sec)	1 to 30sec
Delay Time	Set this item to adjust the transmission timing of the communication request from the GOT. (Default: 0ms)	0 to 300 (ms)

AJ71C24/UC24

Property	Value
Transmission Speed(BPS)	19200
Data Bit	8 bit
Stop Bit	1 bit
Parity	Odd
Retry(Times)	0
Timeout Time(Sec)	3
Delay Time(ms)	0

Item	Description	Range
Transmission Speed	Set this item when change the transmission speed used for communication with the connected equipment. (Default: 19200bps)	4800bps, 9600bps, 19200bps
Data Bit	Set this item when change the data length used for communication with the connected equipment. (Default: 8bit)	8bit (fixed)
Stop Bit	Specify the stop bit length for communications. (Default: 1bit)	1bit (fixed)
Parity	Specify whether or not to perform a parity check, and how it is performed during communication. (Default: Odd)	Odd (fixed)
Retry	Set the number of retries to be performed when a communication timeout occurs. When receiving no response after retries, the communication times out. (Default: 0time)	0 to 5times
Timeout Time	Set the time period for a communication to time out. (Default: 3sec)	1 to 30sec
Delay Time	Set this item to adjust the transmission timing of the communication request from the GOT. (Default: 0ms)	0 to 300 (ms)

Serial (MELSEC)

The following devices are available to GT21 and GS21.

Property	Value
Transmission Speed(BPS)	115200
Retry(Times)	0
Timeout Time(Sec)	3
Delay Time(ms)	0
Format	1
CPU No. switching GD device first No. (3 points)	500
Module No. switching GD device first No. (16 points)	550
Servo axis switching GD device first No. (16 points)	10

Item	Description	Range
Transmission Speed	Set this item when change the transmission speed used for communication with the connected equipment. (Default: 115200bps) When the setting exceeds the limit of the connected equipment, communication is performed at the fastest transmission speed supported by the connected equipment.	9600bps, 19200bps, 38400bps, 57600bps, 115200bps
Retry	Set the number of retries to be performed when a communication error occurs. (Default: 0time)	0 to 5times
Timeout Time	Set the time period for a communication to time out. (Default: 3sec)	3 to 30sec
Delay Time	Set this item to adjust the transmission timing of the communication request from the GOT. (Default: 0ms)	0 to 300 (ms)
Format*1	Set the communication format. (Default: 1)	1, 2
CPU No. switching GD device first No. (3 points)	Set the start device number of the GD devices for CPU No. switching. (Default: 500) For the details, refer to the following. ☞ Page 474 Start device number of the GD devices for CPU number switching	0 to 2032
Module No. switching GD device first No. (16 points)	Set the start device number of the GD devices for module No. switching. (Default: 550) For the details, refer to the following. ☞ Page 475 Start device number of the GD devices for module number switching	0 to 2032
Servo axis switching GD device first No. (16 points)	Set the servo axis switching GD device first No. (Default: 10) For the details, refer to the following. ☞ Page 476 Servo axis switching GD device first No.	0 to 2032

*1 Set this item when replacing the F900 series with GOT2000 series.

- To change the communication settings of the serial communication module connected to an F900 model, set as follows.

The baud rate can be changed to 115200bps.

[Intelligent function module switch setting] of PLC

Switch No.	CH1 side	CH2 side
Switch 1	0000H	-
Switch 2	0000H	-
Switch 3	-	0000H
Switch 4	-	0000H
Switch 5	0000H	0000H

☞ Page 478 PLC Side Setting

GOT communication settings

Item	Set value
Format	1

- To maintain the communication settings of the serial communication module connected to an F900 model, set as follows.

The baud rate remains 38400bps.

GOT communication settings

Item	Set value
Format	2

Point

• Communication interface setting by the Utility

The communication interface setting can be changed on the Utility's [Communication Settings] after writing [Controller Setting] of project data.

For details on the Utility, refer to the following manual.

GOT2000 Series User's Manual (Utility)

• Precedence in communication settings

When settings are made by GT Designer3 or the Utility, the latest setting is effective.

Start device number of the GD devices for CPU number switching

■Specifying a CPU number with a device

[CPU No.] can be specified with the GOT internal registers (GD devices) by specifying a value (100 to 102) to [CPU No.] in the device setting dialog in GT Designer3.

Set the start device number of the GD devices to be used in [CPU No. switching GD device first No. (3 points)].

Specify [CPU No.] with the three consecutive GD devices, starting the set device number.

When [500] is set to [CPU No. switching GD device first No. (3 points)], GD500 to GD502 are used to specify [CPU No.] as shown in the following table.

CPU No.	GD device	Setting range
100	GD500	1 to 4 Setting an invalid value causes a communication timeout error. Specifying a nonexistent CPU No. or a CPU No. not supporting a multiple CPU system with a device causes a controller error.
101	GD501	
102	GD502	

■Specifying a CPU number with a device on the initially-displayed screen

Set [CPU No. switching GD device first No. (3 points)] so that the values of the GD devices are retained and monitored upon the GOT startup.

■Specifying a CPU number with a device in a multi-channel connection

If the setting range of [CPU No. switching GD device first No. (3 points)] set in each channel overlaps, the monitoring target CPU No. set to each channel is switched simultaneously.

Set [CPU No. switching GD device first No. (3 points)] in each channel so that the setting range does not overlap.

■Specifying a CPU number and a station number with devices in a multi-channel connection

When GD10 to GD25 are used to specify the station No. of an inverter or non-Mitsubishi temperature controller connected, setting [10] to [CPU No. switching GD device first No. (3 points)] in a different channel switches the monitoring target CPU No. and station No. of an inverter or non-Mitsubishi temperature controller set to each channel simultaneously.

Set [CPU No. switching GD device first No. (3 points)] so that the setting range does not overlap the station No. of an inverter or non-Mitsubishi temperature controller.

Start device number of the GD devices for module number switching

■Specifying a module number with a device

In a connection via a simple motion module, [Unit No.] can be specified with the GOT internal registers (GD devices) by specifying a value (100 to 10F) to [Unit No.] in the device setting dialog in GT Designer3.

Set the start device number of the GD devices to be used in [Module No. switching GD device first No. (16 points)].

Specify [Unit No.] with the 16 consecutive GD devices, starting the set device number.

When [550] is set to [Module No. switching GD device first No. (16 points)], GD550 to GD565 are used to specify [Unit No.] as shown in the following table.

Unit No.	GD device	Setting range
100	GD550	The setting range depends on [Unit Type]. • When [MELSEC iQ-R, RnMT/NC/RT, CR800-D], [MELSEC iQ-R, RnMT/RT, CR800-D], [MELSEC-Q/QS, Q17nD/M/NC/DR/DSR, CRnD-700], [MELSEC-Q, Q17nD/M/DR/DSR, CRnD-700], [MELSEC-L] or [MELIPC] is selected for [Unit Type] 00 to FF • When [MELSEC iQ-F] is selected for [Unit Type] 01 to 10 Setting an invalid value causes a device range error.
101	GD551	
102	GD552	
103	GD553	
104	GD554	
105	GD555	
106	GD556	
107	GD557	
108	GD558	
109	GD559	
10A	GD560	
10B	GD561	
10C	GD562	
10D	GD563	
10E	GD564	
10F	GD565	

■Specifying a module number with a device on the initially-displayed screen

Set [Module No. switching GD device first No. (16 points)] so that the values of the GD devices are retained and monitored upon the GOT startup.

■Specifying a module number with a device in a multi-channel connection

If the setting range of [Module No. switching GD device first No. (16 points)] set in each channel overlaps, the module No. of the simple motion module via the servo amplifier device of each channel is switched simultaneously.

Set [Module No. switching GD device first No. (16 points)] for each channel so that the setting range does not overlap.

■Specifying a station number and a module number with devices in a multi-channel connection

When GD10 to GD25 are used to specify the station No. of an inverter or non-Mitsubishi temperature controller connected, setting [10] to [Module No. switching GD device first No. (16 points)] switches the module No. of the simple motion module via the servo amplifier device and the station No. of an inverter or non-Mitsubishi temperature controller set to each channel simultaneously.

Set [Module No. switching GD device first No. (16 points)] so that the setting range does not overlap the station No. of an inverter or non-Mitsubishi temperature controller.

Servo axis switching GD device first No.

■Indirect specification of the servo axis No.

In a connection via a Motion CPU or Simple Motion module, a servo axis No. can be indirectly specified with GOT internal registers (GD devices) by specifying a value (100 to 115) to the axis No. of the servo amplifier device.
Set the start device number of the GD devices to be used in [Servo axis switching GD device first No. (16 points)].
Specify a servo axis number with 16 consecutive GD devices, starting the set device number.
When [10] is set to [Servo axis switching GD device first No. (16 points)], GD10 to GD25 are used to specify a servo axis number as shown in the following table.

Servo axis No.	GD device	Setting range
100	GD10	1 to 64 Setting an invalid value causes a device range error.
101	GD11	
102	GD12	
103	GD13	
104	GD14	
105	GD15	
106	GD16	
107	GD17	
108	GD18	
109	GD19	
110	GD20	
111	GD21	
112	GD22	
113	GD23	
114	GD24	
115	GD25	

■Specifying a servo axis number with a device on the initially-displayed screen

Set [Servo axis switching GD device first No. (16 points)] so that the values of the GD devices are retained and monitored upon the GOT startup.

■Specifying a servo axis number with a device in a multi-channel connection

If the setting rage of [Servo axis switching GD device first No. (16 points)] set in each channel overlaps, the axis No. of the servo amplifier of each channel is switched simultaneously.
Set [Servo axis switching GD device first No. (16 points)] for each channel so that the setting range does not overlap.

■Specifying a station number and a servo axis number with devices in a multi-channel connection

When GD10 to GD25 are used to specify the station No. of an inverter or non-Mitsubishi temperature controller connected, setting [10] to [Servo axis switching GD device first No. (16 points)] switches the axis No. of the servo amplifier and the station No. of an inverter or non-Mitsubishi temperature controller set to each channel simultaneously.
Set [Servo axis switching GD device first No. (16 points)] so that the setting range does not overlap the station No. of an inverter or non-Mitsubishi temperature controller.

Point

Cutting the portion of multiple connection of the controller

By setting GOT internal device, GOT can cut the portion of multiple connection of the controller. For example, faulty station that has communication timeout can be cut from the system.

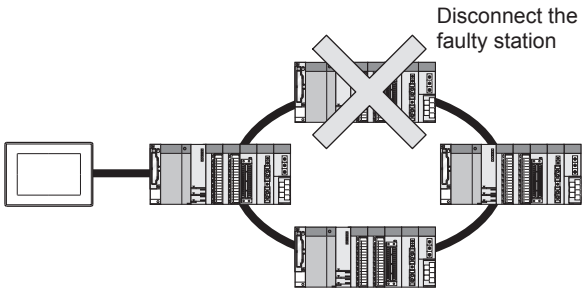

For details of the setting contents of GOT internal device, refer to the following manual.

GT Designer3 (GOT2000) Screen Design Manual

6.5 PLC Side Setting

The GOT operates under the following transmission specifications when it is connected to a Mitsubishi Electric PLC in the computer link connection.

Transmission specifications	Setting
Data bit	8bits
Parity bit	Yes (Odd)
Stop bit	1bit
Sum check	Yes
Transmission speed (Baud rate)	Set the same transmission speed on both the GOT and the PLC.

The PLC side settings (the serial communication module, computer link module) are explained in Section 7.5.2 to Section 7.5.4.

Model		Refer to
Serial communication module (MELSEC iQ-R Series)	RJ71C24, RJ71C24-R2, RJ71C24-R4	☞ Page 479 Connecting to MELSEC iQ-R series
Serial communication module (Q Series)	QJ71C24N, QJ71C24	☞ Page 480 Connecting to MELSEC-Q, L series
	QJ71C24N-R2, QJ71C24-R2	
	QJ71C24N-R4	
Modem interface module	QJ71CMO, QJ71CMON	☞ Page 480 Connecting to MELSEC-Q, L series
Serial communication module (L Series)	LJ71C24, LJ71C24-R2	☞ Page 480 Connecting to MELSEC-Q, L series
Serial communication module(QnA Series)	AJ71QC24N, AJ71QC24	☞ Page 483 Connection to MELSEC-QnA series
	AJ71QC24N-R2, AJ71QC24-R2	
	AJ71QC24N-R4, AJ71QC24-R4	
	A1SJ71QC24N1, A1SJ71QC24N, A1SJ71QC24	
	A1SJ71QC24N1-R2, A1SJ71QC24N-R2, A1SJ71QC24-R2	
Computer link module	AJ71UC24	☞ Page 486 Connecting to MELSEC-A series
	A1SJ71UC24-R2, A1SJ71UC24-PRF, A1SJ71C24-R2, A1SJ71C24-PRF	☞ Page 486 Connecting to MELSEC-A series
	A1SJ71UC24-R4, A1SJ71C24-R4	☞ Page 486 Connecting to MELSEC-A series
	A1SCPUC24-R2	☞ Page 486 Connecting to MELSEC-A series
	A2CCPUC24, A2CCPUC24-PRF	☞ Page 486 Connecting to MELSEC-A series

Connecting to MELSEC iQ-R series

Point

Serial communication module (MELSEC iQ-R Series)

For details of the serial communication module (MELSEC iQ-R Series), refer to the following manual.

Manuals of MELSEC iQ-R Series

[Module parameter] of GX Works3

The PLC can communicate with the GOT with the default module parameter setting.

Point

- When changing the module parameter

After writing module parameters to the PLC CPU, turn the PLC CPU OFF then back ON again, or reset the PLC CPU.

- Connection of multiple GOTs

To some serial communication module models, two GOTs can be connected using both CH1 and CH2.

Connecting to MELSEC-Q, L series

Point

- Serial communication module (MELSEC-Q, L series)

For details on the serial communication module (MELSEC-Q, L series), refer to the following.

Q Corresponding Serial Communication Module User's Manual (Basic)
MELSEC-L Serial Communication Module User's Manual (Basic)

- Modem interface module

For details of the modem interface module, refer to the following manual.

Modem Interface Module User's Manual

[Intelligent function module switch setting] on GX Developer

[The intelligent function module switch setting] on GX Developer is not necessary. (When no [intelligent function module switch setting] is made, the module runs in the GX Developer connection mode.)

A module can be also connected to a GOT by making the following [intelligent function module switch setting] on GX Developer.

■When connecting to the CH1 side

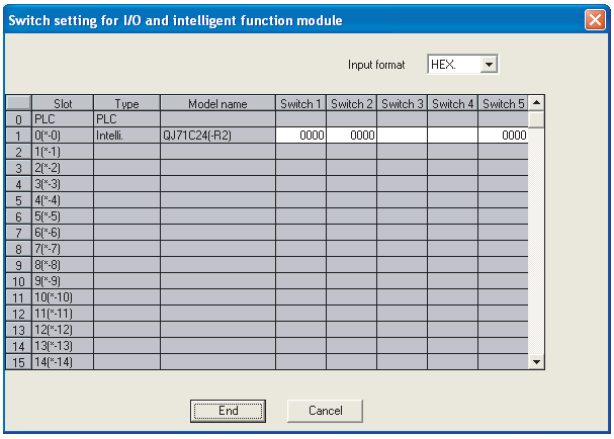

Switch No.	Bit		Description			Set value*3
	Position	Specified value				
Switch 1	b0	OFF	CH1 transmission settings*1	Operation setting	(Operates according to the GOT side specifications.)	0000H
	b1	OFF		Data Bit		
	b2	OFF		Parity Bit		
	b3	OFF		Even/Odd parity		
	b4	OFF		Stop bit		
	b5	OFF		Sum check code		
	b6	OFF		Write during RUN		
	b7	OFF		Setting modifications		
	b8 to b15	—	CH1 transmission speed setting*2			
Switch 2	—		CH1 Communication protocol setting		GX Developer connection	0000H
Switch 5	—		Station number setting		0th station	0000H

■When connecting to the CH2 side

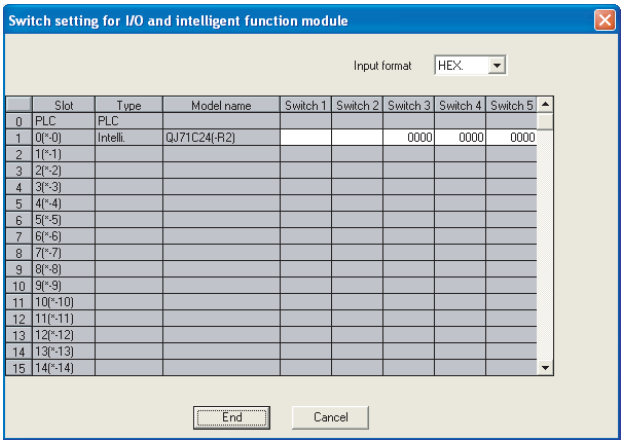

Switch No.	Bit		Description			Set value*3
	Position	Specified value				
Switch 3	b0	OFF	CH2 transmission settings*1	Operation setting	(Operates according to the GOT side specifications.)	0000H
	b1	OFF		Data bit		
	b2	OFF		Parity bit		
	b3	OFF		Even/odd parity		
	b4	OFF		Stop bit		
	b5	OFF		Sum check code		
	b6	OFF		Write during RUN		
	b7	OFF		Setting modifications		
	b8 to b15	—	CH2 transmission speed setting*2			
Switch 4	—		CH2 Communication protocol setting		GX Developer connection	0000H
Switch 5	—		Station number setting		0th station	0000H

*1 The module operates under the following transmission specifications.

Transmission specifications	Setting details
Operation setting	Independent
Data bit	8bits
Parity bit	Yes
Even/odd parity	Odd
Stop bit	1bit
Sum check code	Yes

*2 The serial communication module operates at the transmission speed set on the GOT.

*3 When the value of switch setting is other than "0", the setting of [Format] and [Transmission Speed] on the GOT side are required to be changed.

☞ Page 469 Communication detail settings

Point

• When the [intelligent function module switch setting] has been set

After writing PLC parameters to the PLC CPU, turn the PLC CPU OFF then back ON again, or reset the PLC CPU.

• Connection of multiple GOTs

To some serial communication module models, two GOTs can be connected using both CH1 and CH2.

Model	Connection of 2 GOTs	
	Function version A	Function version B
QJ71C24(-R2)	△	○
QJ71C24N(-R2/R4)	-	○
LJ71C24(-R2)	○	-

○: 2 GOTs connectable, △: 1 GOT connectable, -: Not applicable

• When connecting to the modem interface module

When the modem interface module is connected, only CH2 can be used.

Connection to MELSEC-QnA series

Point

Serial communication module (MELSEC-QnA series)

For details on the serial communication module (MELSEC-QnA series), refer to the following.

Serial Communication Module User's Manual (Modem Function Additional Version)

Switch setting on serial communication module

Set the Station number switches, the Mode setting switch for the channel used for GOT connection, and the Transmission specifications switches.

AJ71QC24N, AJ71QC24N-R2, AJ71QC24N-R4,AJ71QC24, AJ71QC24-R2, AJ71QC24-R4

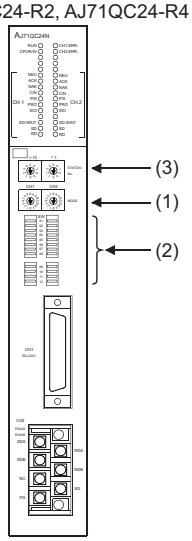

A1SJ71QC24N1, A1SJ71QC24N1-R2, A1SJ71QC24N, A1SJ71QC24N-R2, A1SJ71QC24, A1SJ71QC24-R2

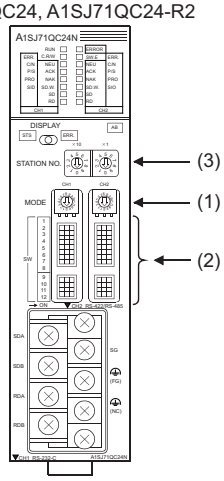

■Mode setting switch

Mode setting switch*1	Description	Set value
CH 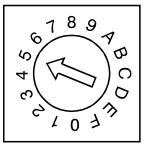 MODE	Dedicated protocol (Format 5) (Binary mode)	5

*1 The mode switch in the figure is for the AJ71QC24 (N) (-R2/R4).

Point

When connecting a GOT to CH2

Set the CH1 side mode switch to any other than "0" (interlocked operation).

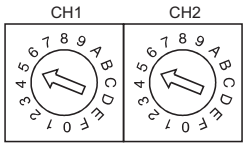

■Transmission specifications setting switch

Transmission specifications setting switch	Setting switch	Description		Set value
AJ71QC24(N) (-R2/R4) 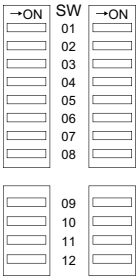 A1SJ71QC24(N) (N1)(-R2)*1 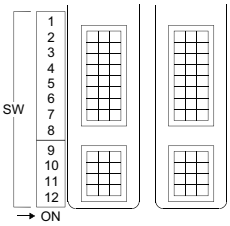 	SW01	Operation setting	Independent operation	OFF
	SW02	Data bit setting	8bits	ON
	SW03	Parity bit enable/disable setting	Enable	ON
	SW04	Even/odd parity setting	Odd	OFF
	SW05	Stop bit setting	1bit	OFF
	SW06	Sum check enable/disable setting	Enable	ON
	SW07	Write during RUN enable/disable setting	Enable	ON
	SW08	Setting change enable/disable	Disable (prohibit)	OFF
	SW09 to SW12	Transmission speed setting	(Consistent with the GOT side specifications)	☞ • Transmission speed setting (SW09 to SW12)
	SW13 to SW15	—	The switch is located on the left side of the module. (only on AJ71QC24 (-R2/R4))	All OFF

*1 The following shows the layout of switches in the case of the following hardware versions for the module.
Switch settings and switch ON/OFF directions are the same.

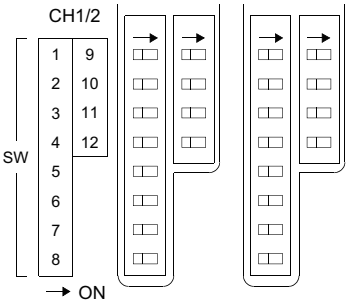

Target unit	Hardware version
A1SJ71QC24	Version E hardware or earlier
A1SJ71QC24-R2	Version D hardware or earlier
A1SJ71QC24N, A1SJ71QC24N-R2	Version A hardware

• Transmission speed setting (SW09 to SW12)

Set the transmission speed (SW09 to SW12) as follows.

The transmission speed setting must be consistent with that of the GOT side.

Setting Switch	Transmission speed*1*2*3					
	4800 bps	9600 bps	19200 bps	38400 bps*4	57600 bps*4	115200 bps*4
SW09	OFF	ON	OFF	ON	OFF	ON
SW10	OFF	OFF	ON	ON	ON	ON
SW11	ON	ON	ON	ON	OFF	OFF
SW12	OFF	OFF	OFF	OFF	ON	ON

*1 Only transmission speeds available on the GOT side are shown.

*2 When the software version of AJ71QC24 (-R2/R4) and A1SJ71QC24 (-R2) is "L" or earlier, and when 2 devices are connected to the two interfaces individually, make the setting so that the total transmission speed of the two interfaces is within 19200bps.
When the total transmission speed of the two interfaces is within 19200bps, a controller other than GOT can be connected to the computer link module.
When only one device is connected to either of the interfaces, a maximum transmission speed of 19200bps can be set to the one where the device is connected.In this instance, set SW09 to SW12 to "OFF" on the other side.

*3 When 3 devices are connected to the two interfaces individually in the case of AJ71QC24N(-R2/R4), A1SJ71QC24N(-R2), and A1SJ71QC24N1(-R2), make the setting so that the total transmission speed of the two interfaces is within 115200bps (within 230400bps in the case of A1SJ71QC24N1(-R2)).
When the total transmission speed of the two interfaces is within 115200bps (within 230400bps in the case of A1SJ71QC24N1(-R2)), a controller other than GOT can be connected to the computer link module.
When only one device is connected to either of the interfaces, a maximum transmission speed of 115200bps can be set to the one where the device is connected.In this instance, set SW09 to SW12 to "OFF" on the other side.

*4 This can be set only in the case of AJ71QC24N (-R2/R4), A1SJ71QC24N (-R2) or A1SJ71QC24N1 (-R2).

■Station number switch (for both CH1 and CH2)

Station number switch*1	Contents	Set value
×10 ×1 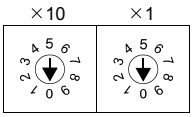 STATION No.	Set the station number of the serial communication module to which an access is made from the GOT.	0

*1 The station number switch in the figure is for the AJ71QC24 (N) (-R2/R4).

Point

When the switch setting has been changed

Turn the PLC CPU OFF then ON again, or reset the PLC CPU.

Connecting to MELSEC-A series

Point

Computer link module (MELSEC-A series)

For details on the computer link module (MELSEC-A series), refer to the following.

Computer Link Module (Com. link func./Print. func.) User's Manual

Switch setting on the computer link module

Set the Mode setting switch, the Transmission specifications switches and the Station number setting switches.

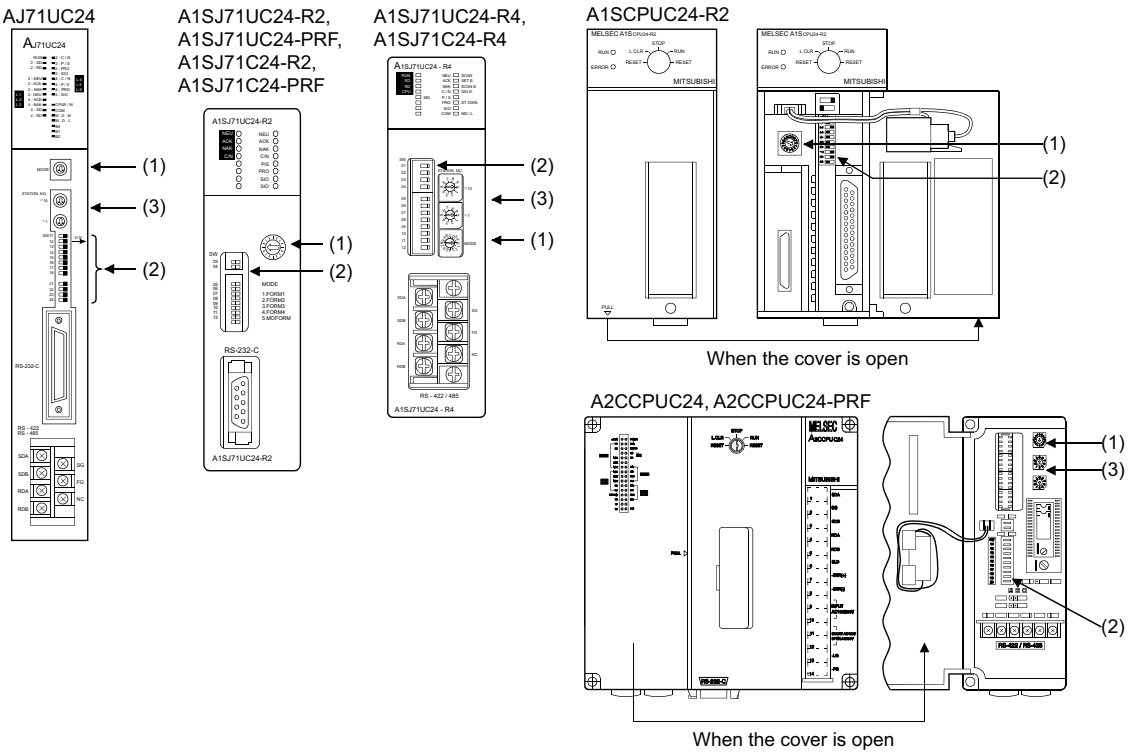

■Mode setting switch

Mode setting switch	Contents		Set value
	Dedicated protocol type 1	RS-232 connection	1
		RS-422 connection	5

■Transmission specifications switch

• AJ71UC24

Transmission specifications switch	Setting switch	Description		Set value
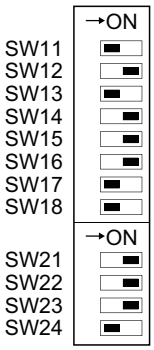	SW11	Main channel setting	RS-232 connection	OFF
			RS-422 connection	ON
	SW12	Data bit setting	8bits	ON
	SW13	Transmission speed setting	(Consistent with the GOT side specifications)	See descriptions below.
	SW14			
	SW15			
	SW16	Parity bit setting	Set	ON
	SW17	Even/odd parity setting	Odd	OFF
	SW18	Stop bit setting	1bit	OFF
	SW21	Sum check setting	Set	ON
	SW22	Write during RUN enabled/disabled setting	Enabled	ON
	SW23	Computer link/multi-drop selection	Computer link	ON
	SW24	Master station/Local station setting	(Setting ignored)	OFF

Transmission speed setting (SW13 to SW15)

Set the transmission speed (SW13 to SW15) as follows.

The transmission speed setting must be consistent with that of the GOT side.

Setting switch	Transmission speed*1		
	4800bps	9600bps	19200bps
SW13	OFF	ON	OFF
SW14	OFF	OFF	ON
SW15	ON	ON	ON

*1 Only transmission speeds available on the GOT side are shown.

• A1SJ71UC24-R2, A1SJ71UC24-PRF, A1SJ71C24-R2, A1SJ71C24-PRF

Transmission specifications switch	Setting switch	Description		Set value
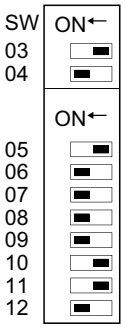	SW03	Unused	—	OFF
	SW04	Write during RUN enabled/disabled setting	Enabled	ON
	SW05	Transmission speed setting	(Consistent with the GOT side specifications)	See descriptions below.
	SW06			
	SW07			
	SW08	Data bit setting	8bits	ON
	SW09	Parity bit setting	Set	ON
	SW10	Even/odd parity setting	Odd	OFF
	SW11	Stop bit setting	1bit	OFF
	SW12	Sum check setting	Set	ON

Transmission speed setting (SW05 to SW07)

Set the transmission speed (SW05 to SW07) as follows.

The transmission speed setting must be consistent with that of the GOT side.

Setting switch	Transmission speed*1		
	4800bps	9600bps	19200bps
SW05	OFF	ON	OFF
SW06	OFF	OFF	ON
SW07	ON	ON	ON

*1 Only transmission speeds available on the GOT side are shown.

• A1SJ71UC24-R4, A1SJ71C24-R4

Transmission specifications switch	Setting switch	Description		Set value
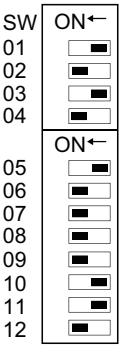	SW01	Master station/Local station setting	(Setting ignored)	OFF
	SW02	Computer link/multi-drop selection	Computer link	ON
	SW03	Unused	—	OFF
	SW04	Write during RUN enabled/disabled setting	Enabled	ON
	SW05	Transmission speed setting	(Consistent with the GOT side specifications)	See descriptions below.
	SW06			
	SW07			
	SW08	Data bit setting	8bits	ON
	SW09	Parity bit setting	Set	ON
	SW10	Even/odd parity setting	Odd	OFF
	SW11	Stop bit setting	1bit	OFF
	SW12	Sum check setting	Set	ON

Transmission speed setting (SW05 to SW07)

Set the transmission speed (SW05 to SW07) as follows.

The transmission speed setting must be consistent with that of the GOT side.

Setting switch	Transmission speed*1		
	4800bps	9600bps	19200bps
SW05	OFF	ON	OFF
SW06	OFF	OFF	ON
SW07	ON	ON	ON

*1 Only transmission speeds available on the GOT side are shown.

• A1SCPUC24-R2

Transmission specifications switch	Setting switch	Description		Set value
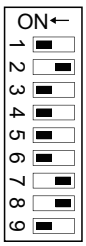	1	Write during RUN enabled/disabled setting	Enabled	ON
	2	Transmission speed setting	(Consistent with the GOT side specifications)	See descriptions below.
	3			
	4			
	5	Data bit setting	8bits	ON
	6	Parity bit setting	Set	ON
	7	Even/odd parity setting	Odd	OFF
	8	Stop bit setting	1bit	OFF
	9	Sum check setting	Set	ON

Transmission speed setting (2 to 4)

Set the transmission speed (2 to 4) as follows.

The transmission speed setting must be consistent with that of the GOT side.

Setting switch	Transmission speed*1		
	4800bps	9600bps	19200bps
2	OFF	ON	OFF
3	OFF	OFF	ON
4	ON	ON	ON

*1 Only transmission speeds available on the GOT side are shown.

• A2CCPUC24, A2CCPUC24-PRF

Transmission specifications switch	Setting switch	Description		Set value
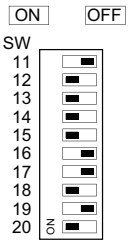	SW11	Transmission speed setting	(Consistent with the GOT side specifications)	See descriptions below.
	SW12			
	SW13			
	SW14	Data bit setting	8bits	ON
	SW15	Parity bit setting	Set	ON
	SW16	Even/odd parity setting	Odd	OFF
	SW17	Stop bit setting	1bit	OFF
	SW18	Sum check setting	Set	ON
	SW19	Main channel setting	RS-232	OFF
	SW20	Write during RUN enabled/disabled setting	Enabled	ON

Transmission speed setting (SW11 to SW13)

Set the transmission speed (SW11 to SW13) as follows.

The transmission speed setting must be consistent with that of the GOT side.

Setting switch	Transmission speed*1		
	4800bps	9600bps	19200bps
SW11	OFF	ON	OFF
SW12	OFF	OFF	ON
SW13	ON	ON	ON

*1 Only transmission speeds available on the GOT side are shown.

■Station number setting switch

Station number switch*1	Description	Set value
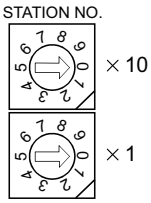	Set the station number of the computer link module to which an access is made from the GOT.	0

*1 The station number setting switch in the figure is for the A1SJ71UC24-R4.

Point

When the switch setting has been changed

Turn the PLC CPU OFF then ON again, or reset the PLC CPU.

When connecting GT21 or GS21 to an A series computer link module

When you connect GT21 or GS21 to an A series link module via RS-232, refer to the following sequence programs to set the buffer memory of the computer link module so that CD signals are not checked.

■In the case of A computer link

Refer to the program example below in which the I/O signals of the computer link module are 80 to 9F (H).

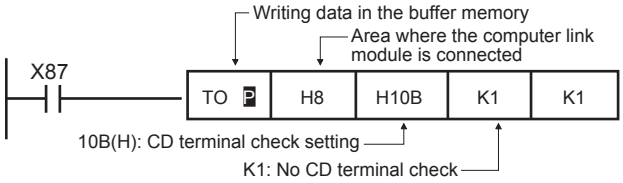

■In the case of CPU equipped with built-in computer link

- A1SCPUC24-R2

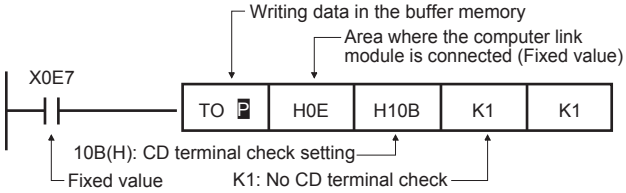

- A2CCPUC24

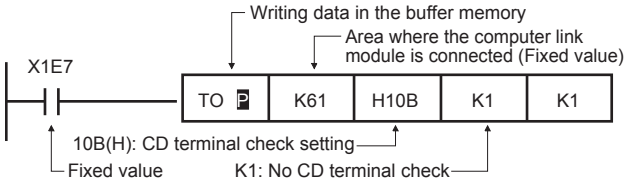

6.6 Precautions

Time taken until the PLC runs when connected in the multiple CPU system

The following time is taken until the PLC runs.

MELSEC iQ-R series, Motion CPU (MELSEC iQ-R series), QCPU (Q mode), Motion CPU (Q series): 10 seconds or more

MELDAS C70: 18 seconds or more

When the GOT starts before the PLC runs, a system alarm occurs.Adjust the opening screen time in the GOT setup so that no system alarm occurs.

📖GT Designer3 (GOT2000) Screen Design Manual

Connection to LCPU

LCPU may diagnose (check file system, recovering process, etc.) the SD memory card when turning on the power or when resetting. Therefore, it takes time until the SD memory card becomes available. When the GOT starts before the SD card becomes available, a system alarm occurs. Adjust the opening screen time in the GOT setup so that no system alarm occurs.

📖GT Designer3 (GOT2000) Screen Design Manual

When monitoring the Q170MCPU

Set [CPU No.] to 2 in the device setting to monitor the device of the Motion CPU area (CPU No. 2).

When [CPU No.] is set to 0 or 1, the device on the PLC CPU area (CPU No. 1) is monitored.

When [CPU No.] is set to the number other than 0 to 2, a communication error occurs and the monitoring cannot be executed.

For the setting of [CPU No.], refer to the following.

📖GT Designer3 (GOT2000) Screen Design Manual

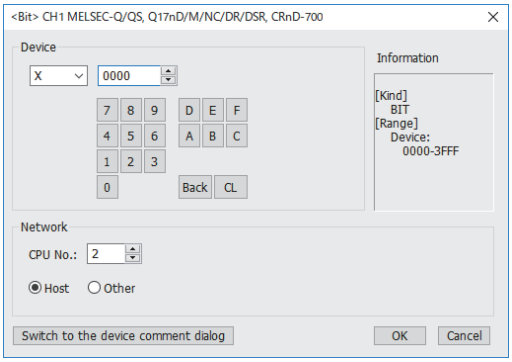

Connection to RnSFCPU

The RnSFCPU takes 10 seconds or more to run.

If the GOT is started before the RnSFCPU runs, a system alarm occurs.

To prevent a system alarm from occurring, adjust the title display time in the [GOT Setup] dialog.

📖GT Designer3 (GOT2000) Screen Design Manual

MEMO

7 BUS CONNECTION

- Page 493 Connectable Model List
- Page 498 System Configuration
- Page 521 GOT Side Settings
- Page 532 Precautions

7.1 Connectable Model List

The following table shows the connectable models.

Series	Model name	Clock	Communication type	Connectable model	Refer to
MELSEC iQ-R Series	R00CPU	○	Bus connection	-	-
	R01CPU				
	R02CPU				
	R04CPU				
	R08CPU				
	R16CPU				
	R32CPU				
	R120CPU				
	R08PCPU				
	R16PCPU				
	R32PCPU				
	R120PCPU				
	R04ENCPU				
	R08ENCPU				
	R16ENCPU				
	R32ENCPU				
	R120ENCPU				
	R08PSFCPU				
	R16PSFCPU				
	R32PSFCPU				
	R120PSFCPU				
	R08SFCPU				
	R16SFCPU				
	R32SFCPU				
	R120SFCPU				
Motion CPU (MELSEC iQ-R Series)	R16MTCPU	○	Bus connection	-	-
	R32MTCPU				
	R64MTCPU				
C Controller module (MELSEC iQ-R Series)	R12CCPU-V	○	Bus connection	-	-
MELSECWinCPU (MELSEC iQ-R Series)	R102WCPU-W	×	Bus connection	-	-
CNC C80	R16NCCPU-S1	○	Bus connection	-	-
Robot controller (MELSEC iQ-R Series)	CR800-R(R16RTCPU)	○	Bus connection	-	-
CC-Link IE Field Network head module	RJ72GF15-T2	×	Bus connection	-	-
MELSEC iQ-F Series	FX5U	○	Bus connection	-	-
	FX5UC				
	FX5UJ				
	FX5S				

Series	Model name	Clock	Communication type	Connectable model	Refer to
MELSEC-Q (Q mode)*4	Q00JCPU*1	○	Bus connection	GT27 GT25	☞ Page 498 Connection to QCPU
	Q00CPU*2				
	Q01CPU*2				
	Q02CPU*2				
	Q02HCPU*2 Q06HCPU*2 Q12HCPU*2 Q25HCPU*2				
	Q02PHCPU Q06PHCPU Q12PHCPU Q25PHCPU				
MELSEC-Q (Q mode)*4	Q12PRHCPU (Main base)	○	-	-	-
	Q25PRHCPU (Main base)				
	Q12PRHCPU (Extension base)				
	Q25PRHCPU (Extension base)				
	Q00UJCPU*1 Q00UJCPU-S8*1	○	Bus connection	GT27 GT25	☞ Page 498 Connection to QCPU
	Q00UCPU Q01UCPU Q02UCPU Q03UDCPU				
	Q04UDHCPU Q06UDHCPU Q10UDHCPU Q13UDHCPU Q20UDHCPU Q26UDHCPU				
	Q03UDECPU Q04UDEHCPU Q06UDEHCPU Q10UDEHCPU Q13UDEHCPU Q20UDEHCPU Q26UDEHCPU Q50UDEHCPU Q100UDEHCPU				
	Q03UDVCPU Q04UDVCPU Q06UDVCPU Q13UDVCPU Q26UDVCPU				
C Controller module (Q Series)	Q12DCCPU-V*3 Q24DHCCPU-V/VG Q24DHCCPU-LS Q26DHCCPU-LS	○	Bus connection	GT27 GT25	☞ Page 498 Connection to QCPU
MELSEC-QS	QS001CPU	○	-	-	-
MELSEC-L	L02CPU	○	-	-	-
	L06CPU				
	L26CPU				
	L26CPU-BT				
	L02CPU-P				
	L06CPU-P				
	L26CPU-P				
	L26CPU-PBT				
	L02SCPU				
	L02SCPU-P				
MELSEC-Q (A mode)	Q02CPU-A	○	-	-	-
	Q02HCPU-A				
	Q06HCPU-A				

Series	Model name	Clock	Communication type	Connectable model	Refer to
MELSEC-QnA (QnACPU)	Q2ACPU	○	Bus connection	GT27 GT25	☞ Page 502 Connection to QnACPU or AnCPU
	Q2ACPU-S1				
	Q3ACPU				
	Q4ACPU				
	Q4ARCPU*5				
MELSEC-QnA (QnASCPU)	Q2ASCPU	○	Bus connection	GT27 GT25	☞ Page 505 Connection to QnASCPU or AnSCPU
	Q2ASCPU-S1				
	Q2ASHCPU				
	Q2ASHCPU-S1				
MELSEC-A (AnCPU)	A2UCPU	○	Bus connection	GT27 GT25	☞ Page 502 Connection to QnACPU or AnCPU
	A2UCPU-S1				
	A3UCPU				
	A4UCPU				
	A2ACPU				
	A2ACPUP21				
	A2ACPUR21				
	A2ACPU-S1				
	A2ACPUP21-S1				
	A2ACPUR21-S1				
	A3ACPU				
	A3ACPUP21				
	A3ACPUR21				
	A1NCPU				
	A1NCPUP21				
	A1NCPUR21				
	A2NCPU				
	A2NCPUP21				
	A2NCPUR21				
	A2NCPU-S1				
	A2NCPUP21-S1				
	A2NCPUR21-S1				
	A3NCPU				
	A3NCPUP21				
	A3NCPUR21				
MELSEC-A (AnSCPU)	A2USCPU	○	Bus connection	GT27 GT25	☞ Page 505 Connection to QnASCPU or AnSCPU
	A2USCPU-S1				
	A2USHCPU-S1				
	A1SCPU				
	A1SCPUC24-R2				
	A1SHCPU				
	A2SCPU				
	A2SCPU-S1				
	A2SHCPU				
	A2SHCPU-S1				
	A1SJCPU*6				
	A1SJCPU-S3*6				
	A1SJHCPU*6				

Series	Model name	Clock	Communication type	Connectable model	Refer to
MELSEC-A	A0J2HCPU	×	Bus connection	GT 27 GT 25	☞ Page 510 Connection to A0J2HCPU
	A0J2HCPUP21				
	A0J2HCPUR21				
	A0J2HCPU-DC24				
	A2CCPU	○	-	-	-
	A2CCPUP21				
	A2CCPUR21				
	A2CCPUC24				
	A2CCPUC24-PRF				
	A2CJCPU-S3				
	A1FXCPU				
Motion CPU (Q Series)	Q172CPU*7*8	○	Bus connection	GT 27 GT 25	☞ Page 498 Connection to QCPU
	Q173CPU*7*8				
	Q172CPUN*7				
	Q173CPUN*7				
	Q172HCPU				
	Q173HCPU				
	Q172DCPU				
	Q173DCPU				
	Q172DCPU-S1				
	Q173DCPU-S1				
	Q172DSCPU				
	Q173DSCPU				
	Q170MCPU*9				
	Q170MSCPU*10				
	Q170MSCPU-S1*10				
	MR-MQ100	○	-	-	-
Motion CPU (A Series)	A273UCPU	○	Bus connection	GT 27 GT 25	☞ Page 511 Connection to Motion CPU
	A273UHCPU				
	A273UHCPU-S3				
	A373UCPU				
	A373UCPU-S3				
	A171SCPU*11	○	Bus connection	GT 27 GT 25	☞ Page 511 Connection to Motion CPU
	A171SCPU-S3*11				
	A171SCPU-S3N*11				
	A171SHCPU*11				
	A171SHCPUN*11				
	A172SHCPU*11				
	A172SHCPUN*11				
	A173UHCPU*11				
	A173UHCPU-S1*11				
MELSEC-WS	WS0-CPU0	×	-	-	-
	WS0-CPU1				
	WS0-CPU3				
MELSECNET/H Remote I/O station	QJ72LP25-25	×	-	-	-
	QJ72LP25G				
	QJ72BR15				
CC-Link IE Field Network head module	LJ72GF15-T2	×	-	-	-
CC-Link IE Field Network Ethernet adapter module	NZ2GF-ETB9	×	-	-	-
CNC C70	Q173NCCPU	○	Bus connection	GT 27 GT 25	☞ Page 498 Connection to QCPU

Series	Model name	Clock	Communication type	Connectable model	Refer to
Robot controller (Q Series)	CRnQ-700 (Q172DRCPU) CR750-Q (Q172DRCPU) CR751-Q (Q172DRCPU) CR800-Q (Q172DSRCPU)	○	Bus connection	GT 27 GT 25	☞ Page 498 Connection to QCPU

*1 When using the bus extension connector box, attach it to the extension base unit. (Connecting it to the main base unit is not allowed.)
*2 For the multiple CPU system configuration, use CPU function version B or later.
*3 Use a module with the upper five digits later than 12042.
*4 When a slim base is used, a bus connection cannot be established.
*5 Bus-connect the GOT on the last redundant extension base A68RB (version B or later) for the Q4ARCPU redundant system.
*6 When an extension base unit is connected, a bus connection cannot be established.
*7 When using SV13, SV22, or SV43, use a Motion CPU with the following version of OS installed.
- SW6RN-SV13Q□: 00E or later
- SW6RN-SV22Q□: 00E or later5
- SW6RN-SV43Q□: 00B or later

*8 Use main modules with the following product numbers.
- Q172CPU: Product number K******* or later
- Q173CPU: Product number J******* or later

*9 Connect Q170MCPU to QC30B directly, or to the extension base unit (Q52B/Q55B).
*10 Connect Q170MSCPU to QC30B directly, or to the extension base unit (Q5□B/Q6□B).
*11 When using an extension base, use the A168.

Point

List of the main base or extension base available for the GOT bus connection

○: The GOT bus connection is available. ×: The GOT bus connection is not available.

Main/Extension base	Model	GOT bus connection
Main base	Q3□B	○
	Q3□DB (Multiple CPU high speed main base unit)	○
	Q3□BL (Large type base unit)	○
	Q3□SB (Slim type main base unit)	×
	Q38RB (Redundant power main base unit)	×
Extension base	Q5□B (Model requiring no power supply module)	○
	Q6□B (Model requiring a power supply module)	○
	QA1S6□B (Small type QA base unit)	○
	Q5□BL (Large type base unit, Model requiring no power supply module)	×
	Q6□BL (Large type base unit, Model requiring a power supply module)	○
	QA6□B (Large type QA base unit)	×
	QA6ADP (QA conversion adapter module) + A5□B/A6□B	×
	Q68RB (Redundant power extension base unit)	×
	Q65WRB (Redundant extension base unit)	×

7.2 System Configuration

Point

When "CONTROL BUS ERR" or "UNIT VERIFY ERR" occurs
It can be considered that noise due to a long bus connection cable causes a malfunction.
Check whether a signal line such as bus cable is placed near the equipment to operate. If the line is close to the equipment, make a distance of 100mm or more from the equipment.

Connection to QCPU

When one GOT is connected

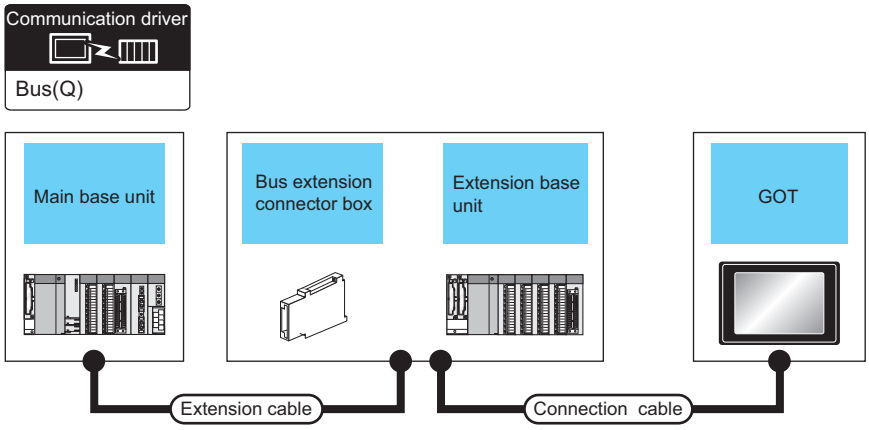

PLC					Connection cable	GOT		Max. distance
Main base		Extension cable*1	Extension base			Option device*4*5	Model	
Main base	Bus extension connector box*2		Extension base	Bus extension connector box*2				
Main base	-	-	-	-	GT15-QC06B(0.6m) GT15-QC12B(1.2m) GT15-QC30B(3m) GT15-QC50B(5m) GT15-QC100B(10m)	GT15-75QBUSL GT15-75QBUS2L GT15-QBUS GT15-QBUS2	GT27 GT25	Between main base and GOT: 13.2m (Including the extension cable length)
	-	Extension cable (13.2m or less)	Extension base	-				
	A9GT-QCNB*3	-	-	-	GT15-QC06B(0.6m) GT15-QC12B(1.2m) GT15-QC30B(3m) GT15-QC50B(5m) GT15-QC100B(10m) GT15-QC150BS(15m) GT15-QC200BS(20m) GT15-QC250BS(25m) GT15-QC300BS(30m) GT15-QC350BS(35m)	GT15-75QBUSL GT15-75QBUS2L GT15-QBUS GT15-QBUS2	GT27 GT25	Between main base and GOT: 37m (Including the extension cable length)
	-	Extension cable (13.2m or less)	Extension base	A9GT-QCNB				

*1 For the extension cables, refer to the MELSEC-Q catalog (L(NA)08032).
*2 When installing the GOT 13.2m or more away from the main base unit, the bus extension connector box is required.
Attach the bus extension connector box to the extension connector of the base unit.
Also, connect the connection cable to the bus extension connector box.
When using no extension base unit: Attach it to the main base unit.
When using the extension base unit: Attach it to the extension base unit on the last stage.

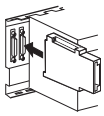

*3 When using the Q00JCPU, Q00UJCPU, or Q00UJCPU-S8, mount a bus extension connector box on the extension base unit.
(It cannot be mounted on the main base unit. When connecting the GOT to the main base unit, the distance between the main base unit and the GOT must be within 13.2 m.)

*4 When using the following functions, use GT15-QBUS(2). GT15-75QBUS(2)L cannot be used.
Remote personal computer operation (Serial), video display function, multimedia function, external I/O device, RGB display function, sound output function

*5 GT25-W and GT2505-V do not support option devices.

When 2 to 5 GOTs are connected

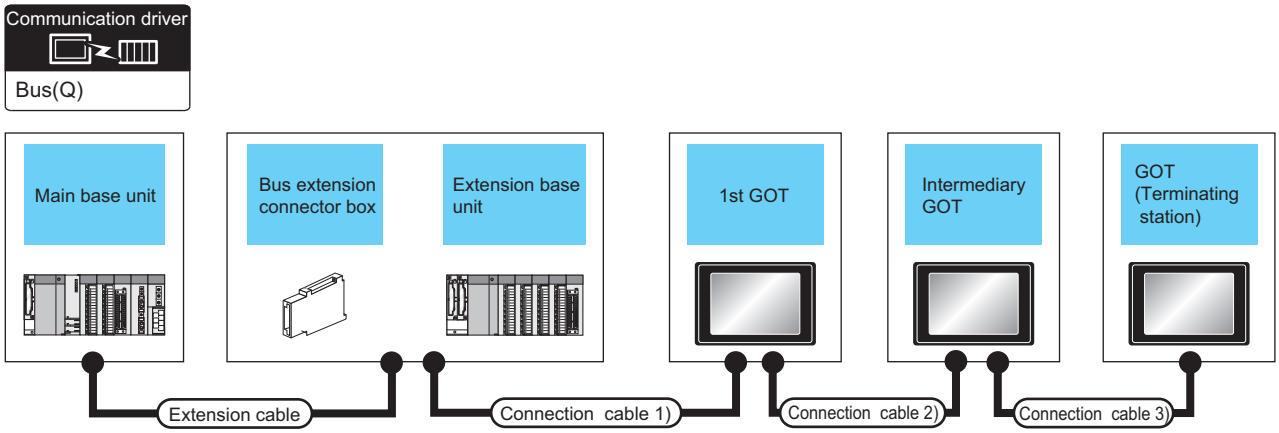

PLC					Connection cable 1)	GOT (1st)		
Main base		Extension cable*1	Extension base			Option device *5*6*7	Model	
Main base	Bus extension connector box*2		Extension base	Bus extension connector box*2				
Main base	-	-	-	-	GT15-QC06B(0.6m) GT15-QC12B(1.2m) GT15-QC30B(3m) GT15-QC50B(5m) GT15-QC100B(10m)	GT15-75QBUS2L GT15-QBUS2	GT27 GT25	Refer to 1) in the table below. →
	-	Extension cable (13.2m or less)	Extension base	-		GT15-75QBUS2L GT15-QBUS2	GT27 GT25	2) →
	A9GT-QCNB*3	-	-	-	GT15-QC06B(0.6m) GT15-QC12B(1.2m) GT15-QC30B(3m) GT15-QC50B(5m) GT15-QC100B(10m) GT15-QC150BS(15m) GT15-QC200BS(20m) GT15-QC250BS(25m) GT15-QC300BS(30m) GT15-QC350BS(35m)	GT15-75QBUS2L GT15-QBUS2	GT27 GT25	3) →
	-	Extension cable (13.2m or less)	Extension base	A9GT-QCNB		GT15-75QBUS2L GT15-QBUS2	GT27 GT25	4) →

Connection cable 2)		GOT (intermediary) *4	Model	Connection cable 3)	GOT (terminal) *4	Model	Max. distance
		Option device *5*6*7			Option device *5*6*7		
1)	GT15-QC06B(0.6m) GT15-QC12B(1.2m) GT15-QC30B(3m) GT15-QC50B(5m) GT15-QC100B(10m) GT15-QC150BS(15m) GT15-QC200BS(20m) GT15-QC250BS(25m) GT15-QC300BS(30m) GT15-QC350BS(35m)	GT15-75QBUS2L, GT15-QBUS2	GT27 GT25	GT15-QC06B(0.6m) GT15-QC12B(1.2m) GT15-QC30B(3m) GT15-QC50B(5m) GT15-QC100B(10m) GT15-QC150BS(15m) GT15-QC200BS(20m) GT15-QC250BS(25m) GT15-QC300BS(30m) GT15-QC350BS(35m)	GT15-75QBUSL, GT15-75QBUS2L, GT15-QBUS, GT15-QBUS2	GT27 GT25	Between main base and GOT (1st): 13.2m Between main base and GOT (terminal): 37m
2)		GT15-75QBUS2L, GT15-QBUS2	GT27 GT25		GT15-75QBUSL, GT15-75QBUS2L, GT15-QBUS, GT15-QBUS2	GT27 GT25	Between main base and GOT (1st): 13.2m (Including the extension cable length) Between main base and GOT (terminal): 37m (Including the extension cable length)
3)		GT15-75QBUS2L, GT15-QBUS2	GT27 GT25		GT15-75QBUSL, GT15-75QBUS2L, GT15-QBUS, GT15-QBUS2	GT27 GT25	Between main base and GOT (terminal): 37m
4)		GT15-75QBUS2L, GT15-QBUS2	GT27 GT25		GT15-75QBUSL, GT15-75QBUS2L, GT15-QBUS, GT15-QBUS2	GT27 GT25	Between main base and GOT (terminal): 37m (Including the extension cable length)

*1 For the extension cables, refer to the MELSEC-Q catalog (L(NA)08032).

*2 When installing the GOT 13.2m or more away from the main base unit, the bus extension connector box is required.
Attach the bus extension connector box to the extension connector of the base unit.
When using no extension base unit: Attach it to the main base unit.
When using the extension base unit: Attach it to the extension base unit on the last stage.
Also, connect the connection cable to the bus extension connector box.
Set the bus extension connector box to the same Stage No. as that of the GOT unit.
For details on the Stage No. setting, refer to the following.
☞ Page 521 Setting communication interface (Controller Setting)

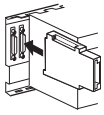

*3 When using the Q00JCPU, Q00UJCPU, or Q00UJCPU-S8, mount a bus extension connector box on the extension base unit.
(It cannot be mounted on the main base unit. When connecting the GOTs to the main base unit, the distance between the main base unit and the first GOT must be within 13.2 m.)

*4 When connecting 3 or more GOTs, the overall cable length is restricted.
☞ Page 538 Connection to multiple GOTs

*5 The bus connection unit
GT15-75QBUSL, GT15-QBUS: Used for a terminal GOT. (Not available for an intermediary GOT)
GT15-75QBUS2L, GT15-QBUS2: Used for an intermediary GOT. (Can be used for a terminal GOT)

*6 When using the following functions, use GT15-QBUS(2). GT15-75QBUS(2)L cannot be used.
Remote personal computer operation (Serial), video display function, multimedia function, external I/O device, RGB display function, sound output function

*7 GT25-W and GT2505-V do not support option devices.

Connection to QnACPU or AnCPU

When one GOT is connected

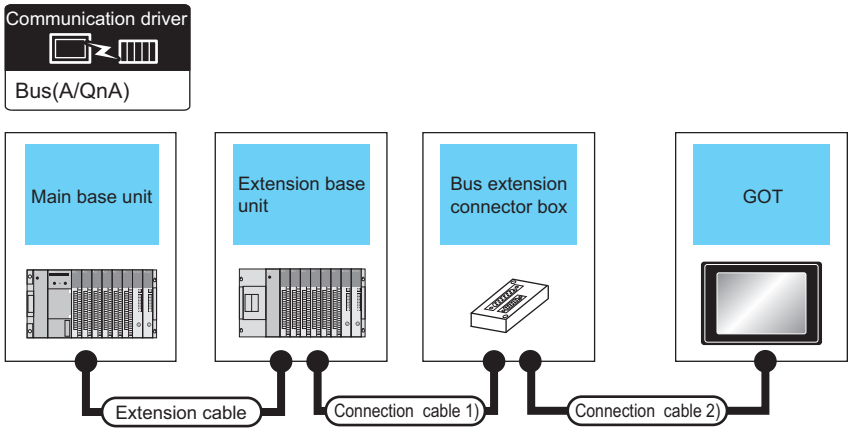

PLC					Connection cable 2)	GOT		Max. distance
Main base	Extension cable*1	Extension base	Connection cable 1)	Bus connector conversion box*2		Option device*5	Model	
Main base	-	-	-	-	GT15-C12NB(1.2m) GT15-C30NB(3m) GT15-C50NB(5m)	GT15-75ABUSL GT15-75ABUS2L GT15-ABUS GT15-ABUS2	GT27 GT25	Between main base and GOT: 6.6m
	-	-	GT15-AC06B(0.6m) GT15-AC12B(1.2m) GT15-AC30B(3m) GT15-AC50B(5m)	A7GT-CNB	GT15-C100EXSS-1(10m) GT15-C200EXSS-1(20m) GT15-C300EXSS-1(30m) *3	GT15-75ABUSL GT15-75ABUS2L GT15-ABUS GT15-ABUS2	GT27 GT25	Between main base and GOT: 36.6m (Including between main base and bus connector conversion box) Between main base and bus connector conversion box: 6.6m
Main base	Extension cable	Extension base	-	-	GT15-C12NB(1.2m) GT15-C30NB(3m) GT15-C50NB(5m)	GT15-75ABUSL GT15-75ABUS2L GT15-ABUS GT15-ABUS2	GT27 GT25	Between main base and GOT: 6.6m (Including the extension cable length)
			GT15-AC06B(0.6m) GT15-AC12B(1.2m) GT15-AC30B(3m) GT15-AC50B(5m)	A7GT-CNB	GT15-C100EXSS-1(10m) GT15-C200EXSS-1(20m) GT15-C300EXSS-1(30m)	GT15-75ABUSL GT15-75ABUS2L GT15-ABUS GT15-ABUS2	GT27 GT25	Between main base and GOT: 36.6m Between main base and bus connector conversion box: 6.6m (Including the extension cable length)

*1 For the extension cables, refer to MELSEC-A/QnA catalog (L(NA)08024).
*2 When installing the GOT 6.6m or more away from the main base unit, the bus connector conversion box is required.
*3 When using GT15-C□EXSS-1, follow the precautions below.
☞ Page 532 GT15-C□EXSS-1, GT15-C□BS
*4 When using the following functions, use GT15-ABUS(2). GT15-75ABUS(2)L cannot be used.
Remote personal computer operation (Serial), video display function, multimedia function, external I/O device, RGB display function, sound output function
*5 GT25-W and GT2505-V do not support option devices.

When 2 to 3 GOTs are connected

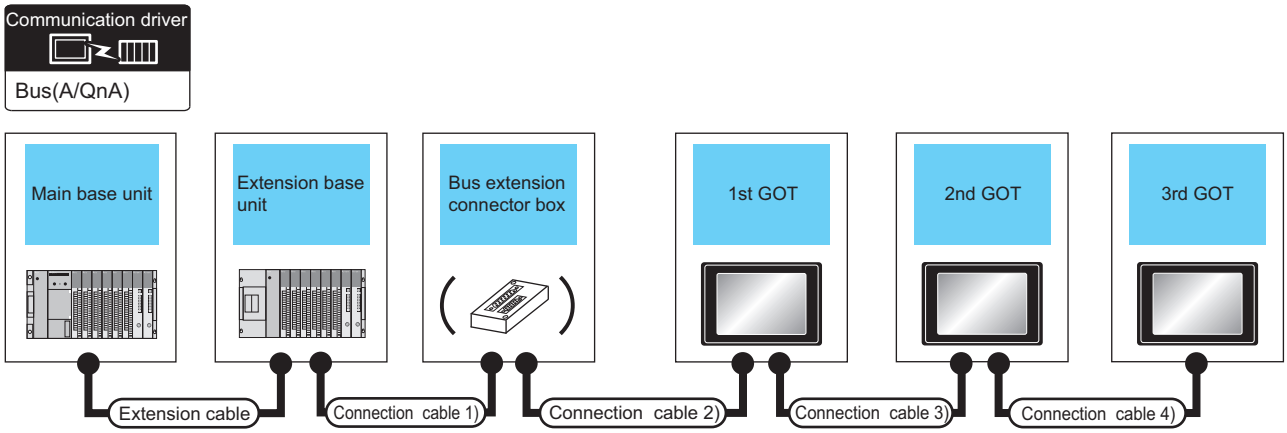

PLC*5					Connection cable 2)	GOT (1st)*3		
Main base	Extension cable*1	Extension base	Connection cable 1)	Bus connector conversion box*2		Option device*6*7*8	Model	
Main base	-	-	-	-	GT15-C12NB(1.2m) GT15-C30NB(3m) GT15-C50NB(5m)	GT15-75ABUS2L GT15-ABUS2	GT27 GT25	Refer to 1) in the table below. →
	Extension cable	Extension base						
	-	-	GT15-AC06B(0.6m) GT15-AC12B(1.2m) GT15-AC30B(3m) GT15-AC50B(5m)	A7GT-CNB	GT15-C100EXSS-1(10m) GT15-C200EXSS-1(20m) *4	GT15-75ABUS2L GT15-ABUS2	GT27 GT25	2) →
	Extension cable	Extension base						
Main base	-	-	-	-	GT15-C12NB(1.2m) GT15-C30NB(3m) GT15-C50NB(5m)	GT15-75ABUS2L GT15-ABUS2	GT27 GT25	3) →
	Extension cable	Extension base						

	Connection cable 3)	GOT (2nd)*3*5		Connection cable 4)	GOT (3rd)*3*5		Max. distance
		Option device*6*7*8	Model		Option device*6*7*8	Model	
1)	GT15-C07BS(0.7m) GT15-C12BS(1.2m) GT15-C30BS(3m) GT15-C50BS(5m) GT15-C100BS(10m) GT15-C200BS(20m) GT15-C300BS(30m) *4	GT15-75ABUSL GT15-75ABUS2L GT15-ABUS GT15-ABUS2	GT27 GT25	-	-	-	Between main base and GOT(1st): 6.6m (Including the extension cable length) Between GOT (1st) and GOT (2nd): 30m Between main base and GOT (2nd): 36.6m (Including the extension cable length)
2)	GT15-C07BS(0.7m) GT15-C12BS(1.2m) GT15-C30BS(3m) GT15-C50BS(5m) GT15-C100BS(10m) GT15-C200BS(20m) *4	GT15-75ABUSL GT15-75ABUS2L GT15-ABUS GT15-ABUS2	GT27 GT25	-	-	-	Between main base and bus connector conversion box: 6.6m (Including the extension cable length) Between bus connector conversion box and GOT (2nd): 30m Between main base and GOT (2nd): 36.6m (Including the extension cable length)
3)	GT15-C07BS(0.7m) GT15-C12BS(1.2m) GT15-C30BS(3m) GT15-C50BS(5m) GT15-C100BS(10m) GT15-C200BS(20m) *4	GT15-75ABUS2L GT15-ABUS2	GT27 GT25	GT15-C07BS(0.7m) GT15-C12BS(1.2m) GT15-C30BS(3m) GT15-C50BS(5m) GT15-C100BS(10m) GT15-C200BS(20m) *4	GT15-75ABUSL GT15-75ABUS2L GT15-ABUS GT15-ABUS2	GT27 GT25	Between main base and GOT(1st): 6.6m (Including the extension cable length) Between GOT (1st) and GOT (3rd): 30m Between main base and GOT (3rd): 36.6m (Including the extension cable length)

*1 For the extension cables, refer to MELSEC-A/QnA catalog (L(NA)08024).
*2 When installing the GOT 6.6m or more away from the main base unit, the bus connector conversion box is required.
*3 GT 2705-V can be available for terminal.
*4 When using GT15-C□EXSS-1 or GT15-C□BS, connect as following precautions.
☞ Page 532 GT15-C□EXSS-1, GT15-C□BS
*5 The number of connectable GOTs is restricted according to the CPU type and the number of intelligent function modules.
☞ Page 538 Connection to multiple GOTs
*6 About the bus connection unit
GT15-75ABUSL, GT15-ABUS: Used for a terminal GOT. (Not available for an intermediary GOT)
GT15-75ABUS2L, GT15-ABUS2: Used for an intermediary GOT. (Can be used for a terminal GOT)
*7 When using the following functions, use GT15-ABUS(2). GT15-75ABUS(2)L cannot be used.
Remote personal computer operation (Serial), video display function, multimedia function, external I/O device, RGB display function, sound output function
*8 GT25-W and GT2505-V do not support option devices.

Connection to QnASCPU or AnSCPU

When one GOT is connected

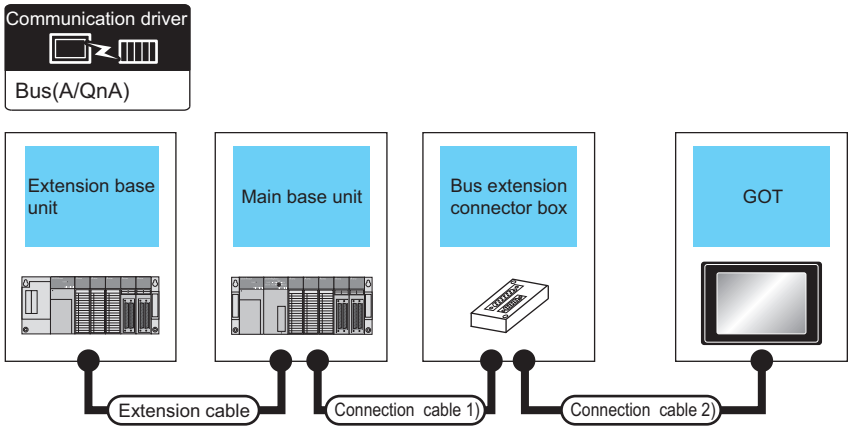

PLC					Connection cable 2)	GOT		Max. distance
Extension base	Extension cable*1	Main base	Connection cable 1)	Bus connector conversion box*2		Option device*4*5	Model	
-	-	Main base	-	-	GT15-A1SC07B(0.7m) GT15-A1SC12B(1.2m) GT15-A1SC30B(3m) GT15-A1SC50B(5m)	GT15-75ABUSL GT15-75ABUS2L GT15-ABUS GT15-ABUS2	GT27 GT25	Between main base and GOT: 5m
			-	-	GT15-C100EXSS-1(10m) GT15-C200EXSS-1(20m) GT15-C300EXSS-1(30m) *3	GT15-75ABUSL GT15-75ABUS2L GT15-ABUS GT15-ABUS2	GT27 GT25	Between main base and GOT: 30m
			GT15-A1SC05NB(0.45m) GT15-A1SC07NB(0.7m) GT15-A1SC30NB(3m) GT15-A1SC50NB(5m)	A7GT-CNB	GT15-C100EXSS-1(10m) GT15-C200EXSS-1(20m) GT15-C300EXSS-1(30m) *3	GT15-75ABUSL GT15-75ABUS2L GT15-ABUS GT15-ABUS2	GT27 GT25	Between main base and GOT: 35m (Including between main base and bus connector conversion box) Between main base and bus connector conversion box: 5m

PLC					Connection cable 2)	GOT		Max. distance
Extension base	Extension cable*1	Main base	Connection cable 1)	Bus connector conversion box*2		Option device*4*5	Model	
Extension base	Extension cable	Main base	-	-	GT15-A1SC07B(0.7m) GT15-A1SC12B(1.2m) GT15-A1SC30B(3m) GT15-A1SC50B(5m)	GT15-75ABUSL GT15-75ABUS2L GT15-ABUS GT15-ABUS2	GT27 GT25	Between extension base and GOT: 6m (Including the extension cable length)
			-	-	GT15-C100EXSS-1(10m) GT15-C200EXSS-1(20m) GT15-C300EXSS-1(30m) *3	GT15-75ABUSL GT15-75ABUS2L GT15-ABUS GT15-ABUS2	GT27 GT25	Between extension base and GOT: 36m (Including the extension cable length)
			GT15-A1SC05NB(0.45m) GT15-A1SC07NB(0.7m) GT15-A1SC30NB(3m) GT15-A1SC50NB(5m)	A7GT-CNB	GT15-C100EXSS-1(10m) GT15-C200EXSS-1(20m) GT15-C300EXSS-1(30m) *3	GT15-75ABUSL GT15-75ABUS2L GT15-ABUS GT15-ABUS2	GT27 GT25	Between extension base and GOT: 36m Between extension base and bus connector conversion box: 6m (Including the extension cable length)

*1 For details on the extension cables, refer to the MELSEC-A/QnA catalog (L(NA)8024).

*2 When installing the GOT 30m or more away from the main base unit, the bus connector conversion box is required.

*3 When using GT15-C□EXSS-1, connect as the following precautions.
☞ Page 532 GT15-C□EXSS-1, GT15-C□BS

*4 When using the following functions, use GT15-ABUS(2). GT15-75ABUS(2)L cannot be used.
Remote personal computer operation (Serial), video display function, multimedia function, external I/O device, RGB display function, sound output function

*5 GT25-W and GT2505-V do not support option devices.

When two GOTs are connected

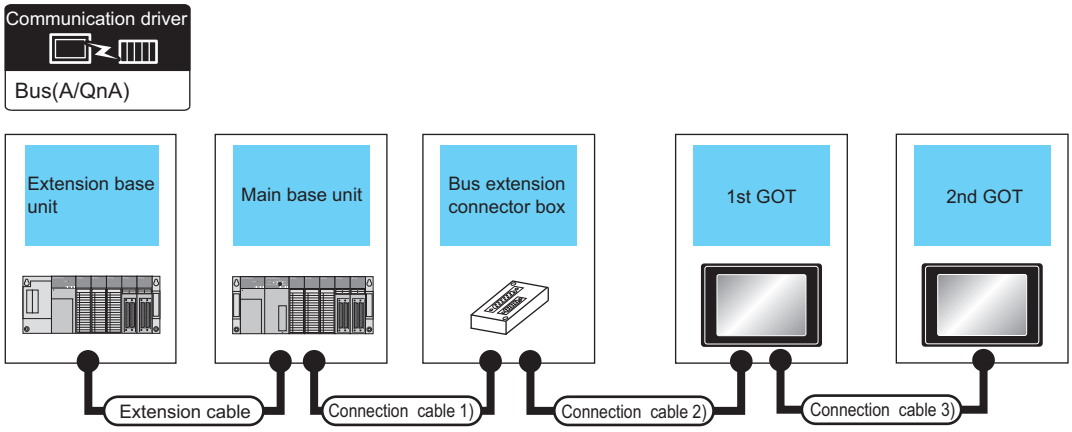

PLC*5					Connection cable 2)	
Extension base	Extension cable*1	Main base	Connection cable 1)	Bus connector conversion box		
-	-	Main base	-	-	GT15-A1SC07B(0.7m) GT15-A1SC12B(1.2m) GT15-A1SC30B(3m) GT15-A1SC50B(5m)	Refer to 1) in the table below. →
			-	-	GT15-C100EXSS-1(10m) GT15-C200EXSS-1(20m) *4	2) →
			GT15-A1SC05NB(0.45m) GT15-A1SC07NB(0.7m) GT15-A1SC30NB(3m) GT15-A1SC50NB(5m)	A7GT-CNB*2	GT15-C100EXSS-1(10m) GT15-C200EXSS-1(20m) *4	3) →

GOT (1st)*3			Connection cable 3)	GOT (2nd)*3*5		Max. distance
	Option device*6*7*8	Model		Option device*6*7*8	Model	
1)	GT15-75ABUS2L GT15-ABUS2	GT27 GT25	GT15-C07BS(0.7m) GT15-C12BS(1.2m) GT15-C30BS(3m) GT15-C50BS(5m) GT15-C100BS(10m) GT15-C200BS(20m) GT15-C300BS(30m) *4	GT15-75ABUSL GT15-75ABUS2L GT15-ABUS GT15-ABUS2	GT27 GT25	Between main base and GOT(1st): 5m Between GOT (1st) and GOT (2nd): 30m Between main base and GOT (2nd): 35m
2)	GT15-75ABUS2L GT15-ABUS2					Between main base and GOT (2nd): 30m
3)	GT15-75ABUS2L GT15-ABUS2					Between main base and bus connector conversion box: 5m Between bus connector conversion box and GOT (2nd): 30m Between main base and GOT (2nd): 35m

PLC*5					Connection cable 2)	
Extension base	Extension cable*1	Main base	Connection cable 1)	Bus connector conversion box		
Extension base	Extension cable	Main base	-	-	GT15-A1SC07B(0.7m) GT15-A1SC12B(1.2m) GT15-A1SC30B(3m) GT15-A1SC50B(5m)	4) →
			-	-	GT15-C100EXSS-1(10m) GT15-C200EXSS-1(20m) *4	5) →
			GT15-A1SC05NB(0.45m) GT15-A1SC07NB(0.7m) GT15-A1SC30NB(3m) GT15-A1SC50NB(5m)	A7GT-CNB*2	GT15-C100EXSS-1(10m) GT15-C200EXSS-1(20m) *4	6) →

GOT (1st)*3			Connection cable 3)	GOT (2nd)*3*5		Max. distance
	Option device*6*7*8	Model		Option device*6*7*8	Model	
4)	GT15-75ABUS2L GT15-ABUS2	GT27 GT25	GT15-C07BS(0.7m) GT15-C12BS(1.2m) GT15-C30BS(3m) GT15-C50BS(5m) GT15-C100BS(10m) GT15-C200BS(20m) GT15-C300BS(30m) *4	GT15-75ABUSL GT15-75ABUS2L GT15-ABUS GT15-ABUS2	GT27 GT25	Between extension base and GOT (1st): 6m (Including the extension cable length) Between GOT (1st) and GOT (2nd): 30m Between extension base and GOT (2nd): 36m (Including the extension cable length)
5)	GT15-75ABUS2L GT15-ABUS2					Between main base and GOT (2nd): 30m Between extension base and GOT (2nd): 36m (Including the extension cable length)
6)	GT15-75ABUS2L GT15-ABUS2					Extension base and bus connector conversion box: 6m (Including extension cable length) Between bus connector conversion box and GOT (2nd): 30m Between extension base and GOT (2nd): 36m (Including the extension cable length)

*1 For the extension cables, refer to MELSEC-A/QnA catalog (L(NA)08024).
*2 When installing the 1st GOT 30m or more away from the main base unit, the bus connector conversion box is required.
*3 GT 2705-V can be available for terminal.
*4 When using GT15-C□EXSS-1 or GT15-C□BS, connect as following precautions.
☞ Page 532 GT15-C□EXSS-1, GT15-C□BS
*5 The number of connectable GOTs is restricted according to the CPU type and the number of intelligent function modules.
☞ Page 538 Connection to multiple GOTs
*6 About the bus connection unit
GT15-75ABUSL, GT15-ABUS: Used for a terminal GOT. (Not available for an intermediary GOT)
GT15-75ABUS2L, GT15-ABUS2: Used for an intermediary GOT. (Can be used for a terminal GOT)
*7 When using the following functions, use GT15-ABUS(2). GT15-75ABUS(2)L cannot be used.
Remote personal computer operation (Serial), video display function, multimedia function, external I/O device, RGB display function, sound output function
*8 GT25-W and GT2505-V do not support option devices.

When three GOTs are connected

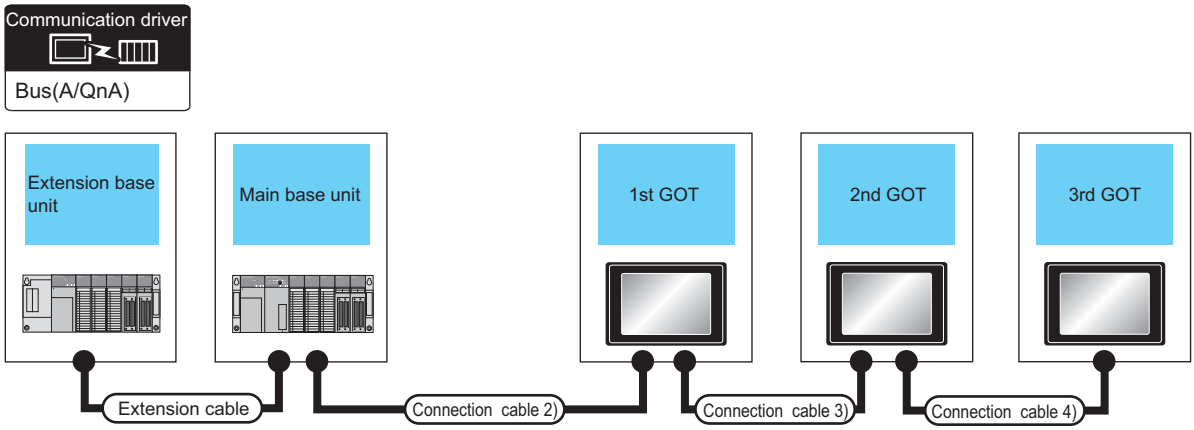

PLC*3					Connection cable 2)	GOT (1st)*2		
Extension base	Extension cable*1	Main base	Connection cable 1)	Bus connector conversion box		Option device*5*6*7	Model	
-	-	Main base	-	-	GT15-A1SC07B(0.7m) GT15-A1SC12B(1.2m) GT15-A1SC30B(3m) GT15-A1SC50B(5m)	GT15-75ABUS2L GT15-ABUS2	GT27 GT25	Refer to 1) in the table below. →
Extension base	Extension cable	Main base	-	-	GT15-A1SC07B(0.7m) GT15-A1SC12B(1.2m) GT15-A1SC30B(3m) GT15-A1SC50B(5m)	GT15-75ABUS2L GT15-ABUS2	GT27 GT25	2) →

Connection cable 3)		GOT (2nd)*2*3		Connection cable 4)	GOT (3rd)*2*3		Max. distance
		Option device*5*6*7	Model		Option device*5*6*7	Model	
1)	GT15-C07BS(0.7m) GT15-C12BS(1.2m) GT15-C30BS(3m) GT15-C50BS(5m) GT15-C100BS(10m) GT15-C200BS(20m) *4	GT15-75ABUS2L GT15-ABUS2	GT27 GT25	GT15-C07BS(0.7m) GT15-C12BS(1.2m) GT15-C30BS(3m) GT15-C50BS(5m) GT15-C100BS(10m) GT15-C200BS(20m) *4	GT15-75ABUSL GT15-75ABUS2L GT15-ABUS GT15-ABUS2	GT27 GT25	Between main base and GOT(1st): 5m Between GOT (1st) and GOT (3rd): 30m Between main base and GOT (3rd): 35m
2)	GT15-C07BS(0.7m) GT15-C12BS(1.2m) GT15-C30BS(3m) GT15-C50BS(5m) GT15-C100BS(10m) GT15-C200BS(20m) *4	GT15-75ABUS2L GT15-ABUS2	GT27 GT25	GT15-C07BS(0.7m) GT15-C12BS(1.2m) GT15-C30BS(3m) GT15-C50BS(5m) GT15-C100BS(10m) GT15-C200BS(20m) *4	GT15-75ABUSL GT15-75ABUS2L GT15-ABUS GT15-ABUS2	GT27 GT25	Between extension base and GOT (1st): 6m (Including the extension cable length) Between GOT (1st) and GOT (3rd): 30m Between extension base and GOT (3rd): 36m (Including the extension cable length)

*1 For the extension cables, refer to MELSEC-A/QnA catalog (L(NA)08024).
*2 GT 2705-V can be available for terminal.
*3 The number of connectable GOTs is restricted according to the CPU type and the number of intelligent function modules.
☞ Page 538 Connection to multiple GOTs
*4 When using GT15-C□BS, connect as following precautions.
☞ Page 532 GT15-C□EXSS-1, GT15-C□BS
*5 The bus connection unit
GT15-75ABUSL, GT15-ABUS: Used for a terminal GOT. (Not available for an intermediary GOT)
GT15-75ABUS2L, GT15-ABUS2: Used for an intermediary GOT. (Can be used for a terminal GOT)
*6 When using the following functions, use GT15-ABUS(2). GT15-75ABUS(2)L cannot be used.
Remote personal computer operation (Serial), video display function, multimedia function, external I/O device, RGB display function, sound output function
*7 GT25-W and GT2505-V do not support option devices.

Connection to A0J2HCPU

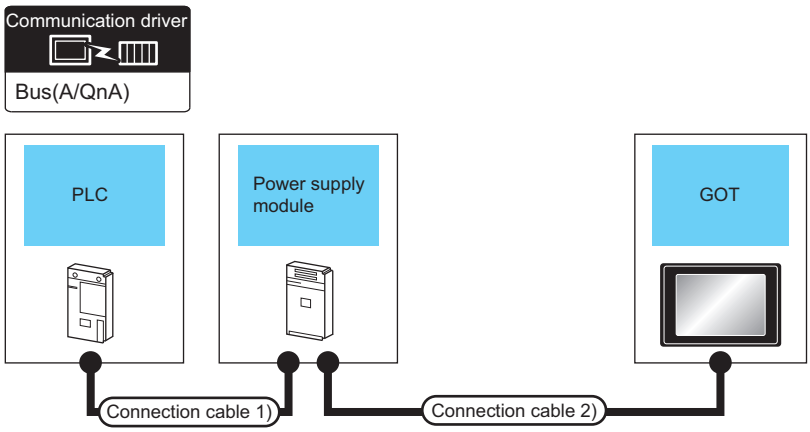

PLC			Connection cable 2)	GOT*1		Max. distance
Model name	Connection cable 1)	Power supply module		Option device*2*3	Model	
A0J2HCPU	A0J2C03(0.3m) A0J2C06(0.55m) A0J2C10(1m) A0J2C20(2m)	A0J2-PW	GT15-J2C10B(1m)	GT15-75ABUSL GT15-75ABUS2L GT15-ABUS GT15-ABUS2	GT27 GT25	Between PLC and GOT: 6.6m Between power supply module and GOT: 1m

*1 The number of connectable GOTs is restricted depending on the number of intelligent function modules mounted to the A0J2HCPU.
☞ Page 538 Connection to multiple GOTs

*2 When using the following functions, use GT15-QBUS(2). GT15-75QBUS(2)L cannot be used.
Remote personal computer operation (Serial), video display function, multimedia function, external I/O device, RGB display function, sound output function

*3 GT25-W and GT2505-V do not support option devices.

Connection to Motion CPU

☞ Page 511 A273UCPU, A273UHCPU(-S3), A373UCPU(-S3)
☞ Page 516 A171SCPU(-S3(N)), A171SHCPU(N), A172SHCPU(N), A173UHCPU(-S1)

A273UCPU, A273UHCPU(-S3), A373UCPU(-S3)

■When one GOT is connected

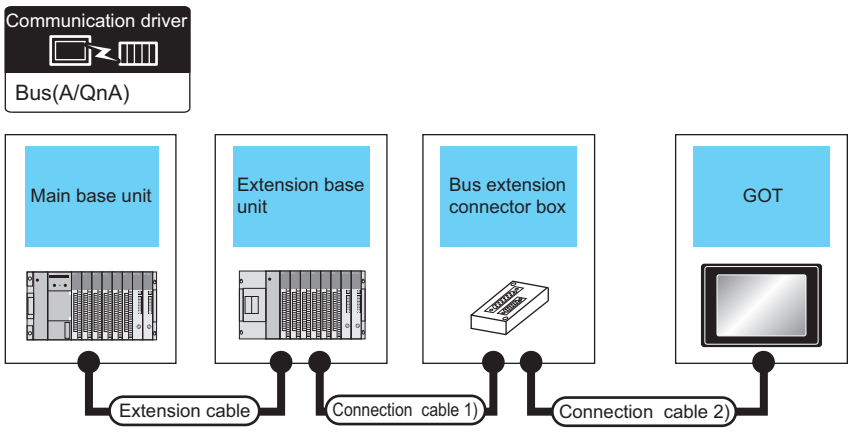

PLC					Connection cable 2)	GOT		Max. distance
Main base	Extension cable	Extension base	Connection cable 1)	Bus connector conversion box*1		Option device*3*4	Model	
Main base	-	-	-	-	GT15-A370C12B-S1(1.2m) GT15-A370C25B-S1(2.5m)	GT15-75ABUSL GT15-75ABUS2L GT15-ABUS GT15-ABUS2	GT27 GT25	Between main base and GOT: 2.5m
			GT15-A370C12B(1.2m) GT15-A370C25B(2.5m)	A7GT-CNB	GT15-C100EXSS-1(10m) GT15-C200EXSS-1(20m) GT15-C300EXSS-1(30m)*2	GT15-75ABUSL GT15-75ABUS2L GT15-ABUS GT15-ABUS2	GT27 GT25	Between main base and GOT: 32.5m (Including between main base and bus connector conversion box) Between main base and bus connector conversion box: 2.5m
Main base	GT15-A370C12B(1.2m) GT15-A370C25B(2.5m)	Extension base	-	-	GT15-C12NB(1.2m) GT15-C30NB(3m) GT15-C50NB(5m)	GT15-75ABUSL GT15-75ABUS2L GT15-ABUS GT15-ABUS2	GT27 GT25	Between main base and GOT: 6.6m (Including the extension cable length)
			GT15-AC06B(0.6m) GT15-AC12B(1.2m) GT15-AC30B(3m) GT15-AC50B(5m)	A7GT-CNB	GT15-C100EXSS-1(10m) GT15-C200EXSS-1(20m) GT15-C300EXSS-1(30m)*2	GT15-75ABUSL GT15-75ABUS2L GT15-ABUS GT15-ABUS2	GT27 GT25	Between main base and GOT: 36.6m Between main base and bus connector conversion box: 6.6m (Including the extension cable length)

*1 When installing the GOT 30m or more away from the main base unit, the bus connector conversion box is required.

*2 When using GT15-C□EXSS-1, connect as the following precautions.
☞ Page 532 GT15-C□EXSS-1, GT15-C□BS

*3 When using the following functions, use GT15-ABUS(2). GT15-75ABUS(2)L cannot be used.
Remote personal computer operation (Serial), video display function, multimedia function, external I/O device, RGB display function, sound output function

*4 GT25-W and GT2505-V do not support option devices.

■When two GOTs are connected

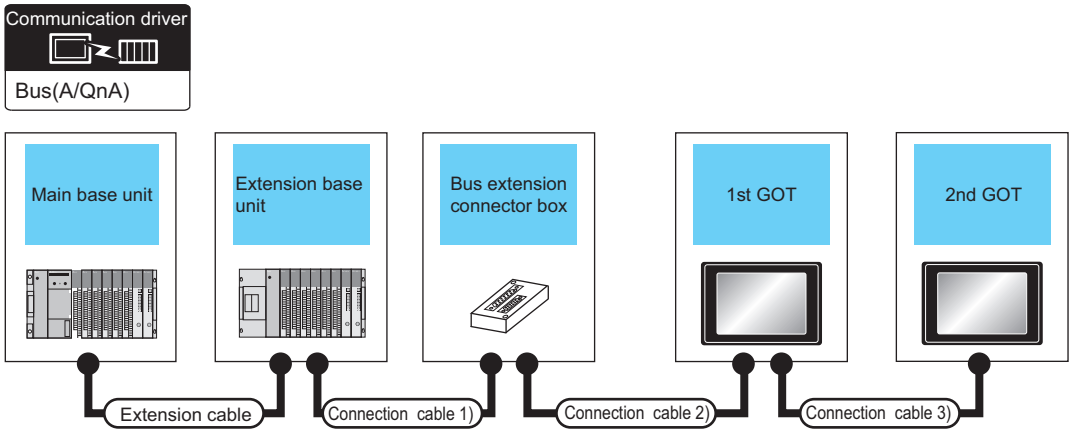

PLC*4					Connection cable 2)	
Main base	Extension cable	Extension base	Connection cable 1)	Bus connector conversion box		
Main base	-	-	-	-	GT15-A370C12B-S1(1.2m) GT15-A370C25B-S1(2.5m)	Refer to 1) in the table below. →
			GT15-A370C12B(1.2m) GT15-A370C25B(2.5m)	A7GT-CNB*1	GT15-C100EXSS-1(10m) GT15-C200EXSS-1(20m) *3	2) →
Main base	GT15-A370C12B(1.2m) GT15-A370C25B(2.5m)	Extension base	-	-	GT15-C12NB(1.2m) GT15-C30NB(3m) GT15-C50NB(5m)	3) →
			GT15-AC06B(0.6m) GT15-AC12B(1.2m) GT15-AC30B(3m) GT15-AC50B(5m)	A7GT-CNB*1	GT15-C100EXSS-1(10m) GT15-C200EXSS-1(20m) *3	4) →

	GOT (1st)*		Connection cable 3)	GOT (2nd)*2*4		Max. distance
	Option device*5*6*7	Model		Option device*5*6*7	Model	
1)	GT15-75ABUS2L GT15-ABUS2	GT27 GT25	GT15-C07BS(0.7m) GT15-C12BS(1.2m) GT15-C30BS(3m) GT15-C50BS(5m) GT15-C100BS(10m) GT15-C200BS(20m) GT15-C300BS(30m) *3	GT15-75ABUSL GT15-75ABUS2L GT15-ABUS GT15-ABUS2	GT27 GT25	Between main base and GOT(1st): 2.5m Between GOT (1st) and GOT (2nd): 30m Between main base and GOT (2nd): 32.5m
2)	GT15-75ABUS2L GT15-ABUS2	GT27 GT25	GT15-C07BS(0.7m) GT15-C12BS(1.2m) GT15-C30BS(3m) GT15-C50BS(5m) GT15-C100BS(10m) GT15-C200BS(20m) *3	GT15-75ABUSL GT15-75ABUS2L GT15-ABUS GT15-ABUS2	GT27 GT25	Between main base and bus connector conversion box: 2.5m Between bus connector conversion box and GOT (2nd): 30m Between main base and GOT (2nd): 32.5m
3)	GT15-75ABUS2L GT15-ABUS2	GT27 GT25	GT15-C07BS(0.7m) GT15-C12BS(1.2m) GT15-C30BS(3m) GT15-C50BS(5m) GT15-C100BS(10m) GT15-C200BS(20m) GT15-C300BS(30m) *3	GT15-75ABUSL GT15-75ABUS2L GT15-ABUS GT15-ABUS2	GT27 GT25	Between main base and GOT (1st): 6.6m (Including the extension cable length) Between GOT (1st) and GOT (2nd): 30m Between main base and GOT (2nd): 36.6m (Including the extension cable length)
4)	GT15-75ABUS2L GT15-ABUS2	GT27 GT25	GT15-C07BS(0.7m) GT15-C12BS(1.2m) GT15-C30BS(3m) GT15-C50BS(5m) GT15-C100BS(10m) GT15-C200BS(20m) *3	GT15-75ABUSL GT15-75ABUS2L GT15-ABUS GT15-ABUS2	GT27 GT25	Between main base and bus connector conversion box: 6.6m (Including extension cable length) Between bus connector conversion box and GOT (2nd): 30m Between main base and GOT (2nd): 36.6m (Including the extension cable length)

*1 When installing the 1st GOT 30m or more away from the main base unit, the bus connector conversion box is required.
*2 GT 2705-V can be available for terminal.
*3 When using GT15-C□EXSS-1 or GT15-C□BS, connect as following precautions.
☞ Page 532 GT15-C□EXSS-1, GT15-C□BS
*4 The number of connectable GOTs is restricted according to the CPU type and the number of intelligent function modules.
☞ Page 538 Connection to multiple GOTs
*5 The bus connection unit
GT15-75ABUSL, GT15-ABUS: Used for a terminal GOT. (Not available for an intermediary GOT)
GT15-75ABUS2L, GT15-ABUS2: Used for an intermediary GOT. (Can be used for a terminal GOT)
*6 When using the following functions, use GT15-ABUS(2). GT15-75ABUS(2)L cannot be used.
Remote personal computer operation (Serial), video display function, multimedia function, external I/O device, RGB display function, sound output function
*7 GT25-W and GT2505-V do not support option devices.

■When three GOTs are connected

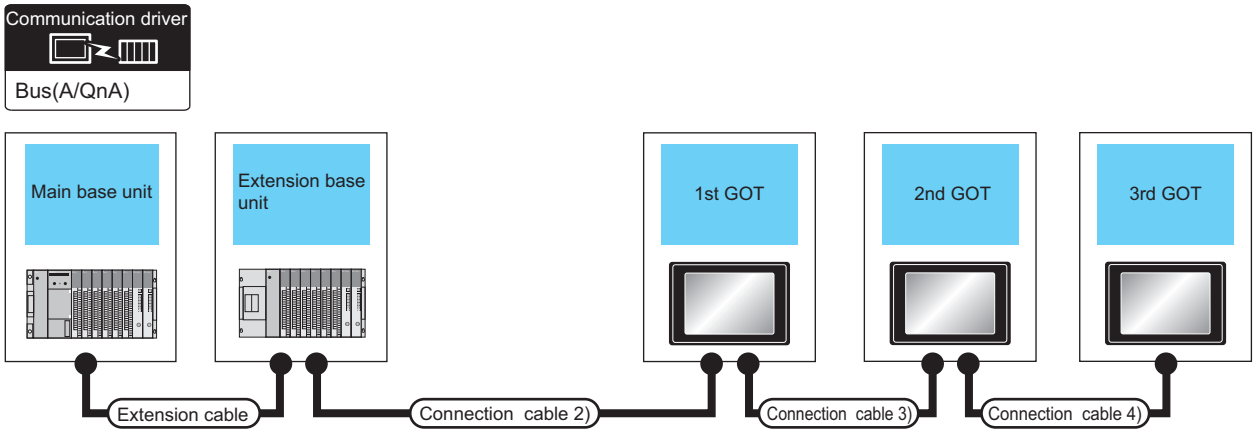

PLC*2					Connection cable 2)	GOT (1st)*1		
Extension base	Extension cable	Main base	Connection cable 1)	Bus connector conversion box		Option device*4*5*6	Model	
-	-	Main base	-	-	GT15-A370C12B-S1(1.2m) GT15-A370C25B-S1(2.5m)	GT15-75ABUS2L GT15-ABUS2	GT27 GT25	Refer to 1) in the table below. →
Extension base	GT15-A370C12B(1.2m) GT15-A370C25B(2.5m)	Main base	-	-	GT15-C12NB(1.2m) GT15-C30NB(3m) GT15-C50NB(5m)	GT15-75ABUS2L GT15-ABUS2	GT27 GT25	2) →

Connection cable 3)		GOT (2nd) *1*2		Connection cable 4)	GOT (3rd) *1*2		Max. distance
		Option device*4*5*6	Model		Option device*4*5*6	Model	
1)	GT15-C07BS(0.7m) GT15-C12BS(1.2m) GT15-C30BS(3m) GT15-C50BS(5m) GT15-C100BS(10m) GT15-C200BS(20m) *3	GT15-75ABUS2L GT15-ABUS2	GT27 GT25	GT15-C07BS(0.7m) GT15-C12BS(1.2m) GT15-C30BS(3m) GT15-C50BS(5m) GT15-C100BS(10m) GT15-C200BS(20m) *3	GT15-75ABUSL GT15-75ABUS2L GT15-ABUS GT15-ABUS2	GT27 GT25	Between main base and GOT(1st): 2.5m Between GOT (1st) and GOT (3rd): 30m Between main base and GOT (3rd): 32.5m
2)	GT15-C07BS(0.7m) GT15-C12BS(1.2m) GT15-C30BS(3m) GT15-C50BS(5m) GT15-C100BS(10m) GT15-C200BS(20m) *3	GT15-75ABUS2L GT15-ABUS2	GT27 GT25	GT15-C07BS(0.7m) GT15-C12BS(1.2m) GT15-C30BS(3m) GT15-C50BS(5m) GT15-C100BS(10m) GT15-C200BS(20m) *3	GT15-75ABUSL GT15-75ABUS2L GT15-ABUS GT15-ABUS2	GT27 GT25	Between main base and GOT(1st): 6.6m (Including the extension cable length) Between GOT (1st) and GOT (3rd): 30m Between main base and GOT (3rd): 36.6m (Including the extension cable length)

*1 GT 2705-V can be available for terminal.

*2 The number of connectable GOTs is restricted according to the CPU type and the number of intelligent function modules.
☞ Page 538 Connection to multiple GOTs

*3 When using GT15-C□BS, connect as following precautions.
☞ Page 532 GT15-C□EXSS-1, GT15-C□BS

*4 The bus connection unit
GT15-75ABUSL, GT15-ABUS: Used for a terminal GOT. (Not available for an intermediary GOT)
GT15-75ABUS2L, GT15-ABUS2: Used for an intermediary GOT. (Can be used for a terminal GOT)

*5 When using the following functions, use GT15-ABUS(2). GT15-75ABUS(2)L cannot be used.
Remote personal computer operation (Serial), video display function, multimedia function, external I/O device, RGB display function, sound output function

*6 GT25-W and GT2505-V do not support option devices.

A171SCPU(-S3(N)), A171SHCPU(N), A172SHCPU(N), A173UHCPU(-S1)

■When one GOT is connected

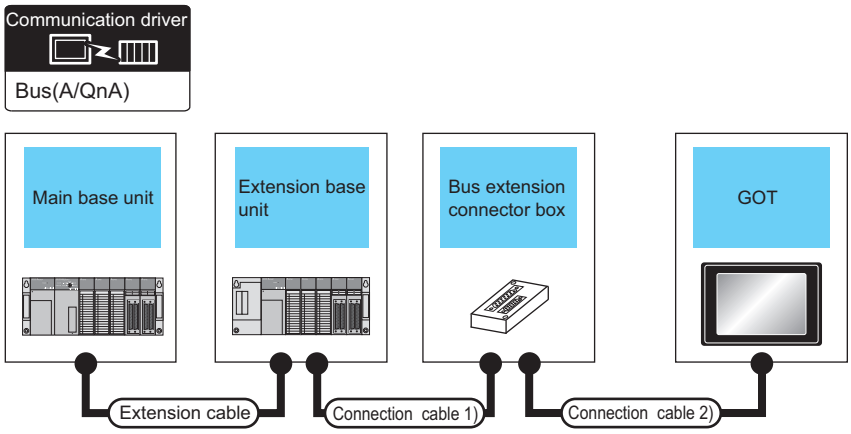

PLC					Connection cable 2)	GOT		Max. distance
Main base	Extension cable*1	Extension base*2	Connection cable 1)	Bus connector conversion box		Option device*5*6	Model	
Main base	-	-	-	-	GT15-A1SC07B(0.7m) GT15-A1SC12B(1.2m) GT15-A1SC30B(3m)	GT15-75ABUSL GT15-75ABUS2L GT15-ABUS GT15-ABUS2	GT27 GT25	Between main base and GOT: 3m
			-	-	GT15-C100EXSS-1(10m) GT15-C200EXSS-1(20m) GT15-C300EXSS-1(30m) *4	GT15-75ABUSL GT15-75ABUS2L GT15-ABUS GT15-ABUS2	GT27 GT25	Between main base and GOT: 30m
			GT15-A1SC05NB(0.45m) GT15-A1SC07NB(0.7m) GT15-A1SC30NB(3m)	A7GT-CNB*3	GT15-C100EXSS-1(10m) GT15-C200EXSS-1(20m) GT15-C300EXSS-1(30m) *4	GT15-75ABUSL GT15-75ABUS2L GT15-ABUS GT15-ABUS2	GT27 GT25	Between main base and GOT: 33m (Including between main base and bus connector conversion box) Between main base and bus connector conversion box: 3m
Main base	Extension cable	Extension base	-	-	GT15-A1SC07B(0.7m) GT15-A1SC12B(1.2m) GT15-A1SC30B(3m)	GT15-75ABUSL GT15-75ABUS2L GT15-ABUS GT15-ABUS2	GT27 GT25	Between extension base and GOT: 3m (Including the extension cable length)
					GT15-C100EXSS-1(10m) GT15-C200EXSS-1(20m) GT15-C300EXSS-1(30m) *4	GT15-75ABUSL GT15-75ABUS2L GT15-ABUS GT15-ABUS2	GT27 GT25	Between extension base and GOT: 33m (Including the extension cable length)
			GT15-A1SC05NB(0.45m) GT15-A1SC07NB(0.7m) GT15-A1SC30NB(3m)	A7GT-CNB*3	GT15-C100EXSS-1(10m) GT15-C200EXSS-1(20m) GT15-C300EXSS-1(30m) *4	GT15-75ABUSL GT15-75ABUS2L GT15-ABUS GT15-ABUS2	GT27 GT25	Between extension base and GOT: 33m Between extension base and bus connector conversion box: 3m (Including the extension cable length)

*1 For details on the extension cables, refer to the MELSEC-A/QnA catalog (L(NA)8024).
*2 Use the A168B for the extension base unit.
*3 When installing the GOT 30m or more away from the main base unit, the bus connector conversion box is required.
*4 When using GT15-C□EXSS-1, connect as the following precautions.
☞ Page 532 GT15-C□EXSS-1, GT15-C□BS
*5 When using the following functions, use GT15-ABUS(2). GT15-75ABUS(2)L cannot be used.
Remote personal computer operation (Serial), video display function, multimedia function, external I/O device, RGB display function, sound output function
*6 GT25-W and GT2505-V do not support option devices.

■When two GOTs are connected

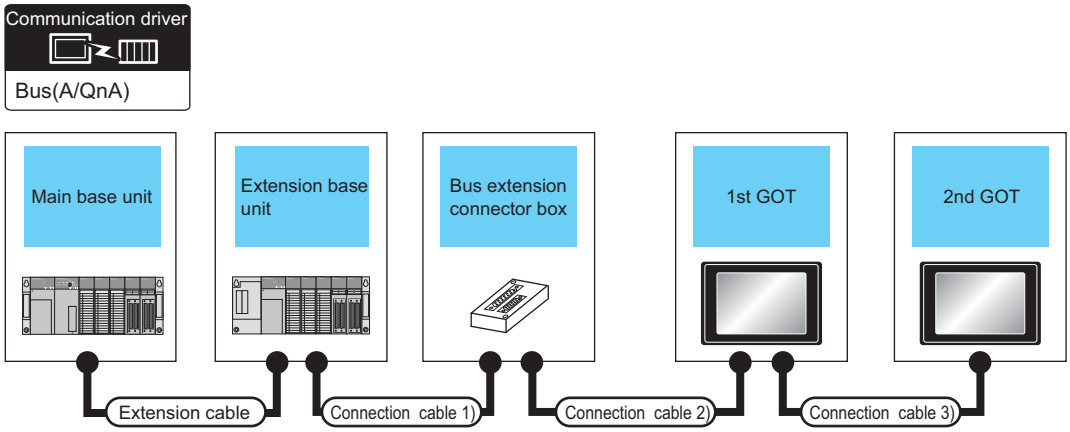

PLC*5					Connection cable 2)	
Main base	Extension cable*1	Extension base*2	Connection cable 1)	Bus connector conversion box		
Main base	-	-	-	-	GT15-A1SC07B(0.7m) GT15-A1SC12B(1.2m) GT15-A1SC30B(3m)	Refer to 1) in the table below. →
			-	-	GT15-C100EXSS-1(10m) GT15-C200EXSS-1(20m) *5	2) →
			GT15-A1SC05NB(0.45m) GT15-A1SC07NB(0.7m) GT15-A1SC30NB(3m)	A7GT-CNB*3	GT15-C100EXSS-1(10m) GT15-C200EXSS-1(20m) *5	3) →

	GOT (1st)*4		Connection cable 3)	GOT (2nd)*4*6		Max. distance
	Option device*7*8*9	Model		Option device*7*8*9	Model	
1)	GT15-75ABUS2L GT15-ABUS2	GT27 GT25	GT15-C07BS(0.7m) GT15-C12BS(1.2m) GT15-C30BS(3m) GT15-C50BS(5m) GT15-C100BS(10m) GT15-C200BS(20m) GT15-C300BS(30m) *5	GT15-75ABUSL GT15-75ABUS2L GT15-ABUS GT15-ABUS2	GT27 GT25	Between main base and GOT(1st): 3m Between GOT (1st) and GOT (2nd): 30m Between main base and GOT (2nd): 33m
2)	GT15-75ABUS2L GT15-ABUS2	GT27 GT25	GT15-C07BS(0.7m) GT15-C12BS(1.2m) GT15-C30BS(3m) GT15-C50BS(5m) GT15-C100BS(10m) GT15-C200BS(20m) *5	GT15-75ABUSL GT15-75ABUS2L GT15-ABUS GT15-ABUS2	GT27 GT25	Between main base and GOT (2nd): 30m
3)	GT15-75ABUS2L GT15-ABUS2	GT27 GT25		GT15-75ABUSL GT15-75ABUS2L GT15-ABUS GT15-ABUS2	GT27 GT25	Between main base and bus connector conversion box: 3m Between bus connector conversion box and GOT (2nd): 30m Between main base and GOT (2nd): 33m

PLC*5					Connection cable 2)	
Main base	Extension cable*1	Extension base*2	Connection cable 1)	Bus connector conversion box		
Main base	Extension cable	Extension base	-	-	GT15-A1SC07B(0.7m) GT15-A1SC12B(1.2m) GT15-A1SC30B(3m)	4) →
			-	-	GT15-C100EXSS-1(10m) GT15-C200EXSS-1(20m) *5	5) →
			GT15-A1SC05NB(0.45m) GT15-A1SC07NB(0.7m) GT15-A1SC30NB(3m)	A7GT-CNB*3	GT15-C100EXSS-1(10m) GT15-C200EXSS-1(20m) *5	6) →

GOT (1st)*4			Connection cable 3)	GOT (2nd)*4*6		Max. distance
	Option device*7*8*9	Model		Option device*7*8*9	Model	
4)	GT15-75ABUS2L GT15-ABUS2	GT27 GT25	GT15-C07BS(0.7m) GT15-C12BS(1.2m) GT15-C30BS(3m) GT15-C50BS(5m) GT15-C100BS(10m) GT15-C200BS(20m) GT15-C300BS(30m) *5	GT15-75ABUSL GT15-75ABUS2L GT15-ABUS GT15-ABUS2	GT27 GT25	Between main base and GT (1st): 3m (Including the extension cable length) Between GT (1st) and GT (2nd): 30m Between main base and GT (2nd): 33m (Including the extension cable length)
5)	GT15-75ABUS2L GT15-ABUS2	GT27 GT25	GT15-C07BS(0.7m) GT15-C12BS(1.2m) GT15-C30BS(3m) GT15-C50BS(5m) GT15-C100BS(10m) GT15-C200BS(20m) *5	GT15-75ABUSL GT15-75ABUS2L GT15-ABUS GT15-ABUS2	GT27 GT25	Between main base and GT (2nd): 30m
6)	GT15-75ABUS2L GT15-ABUS2	GT27 GT25		GT15-75ABUSL GT15-75ABUS2L GT15-ABUS GT15-ABUS2	GT27 GT25	Between main base and bus connector conversion box: 3m (Including extension cable length) Between bus connector conversion box and GT (2nd): 30m Between main base and GT (2nd): 33m (Including the extension cable length)

*1 For the extension cables, refer to MELSEC-A/QnA catalog (L(NA)08024).
*2 Use the A168B for the extension base unit.
*3 When installing the 1st GOT 30m or more away from the main base unit, the bus connector conversion box is required.
*4 GT 2705-V can be available for terminal.
*5 When using GT15-C□EXSS-1 or GT15-C□BS, connect as following precautions.
☞ Page 532 GT15-C□EXSS-1, GT15-C□BS
*6 The number of connectable GOTs is restricted according to the CPU type and the number of intelligent function modules.
☞ Page 538 Connection to multiple GOTs
*7 The bus connection unit
GT15-75ABUSL, GT15-ABUS: Used for a terminal GOT. (Not available for an intermediary GOT)
GT15-75ABUS2L, GT15-ABUS2: Used for an intermediary GOT. (Can be used for a terminal GOT)
*8 When using the following functions, use GT15-ABUS(2). GT15-75ABUS(2)L cannot be used.
Remote personal computer operation (Serial), video display function, multimedia function, external I/O device, RGB display function, sound output function
*9 GT25-W and GT2505-V do not support option devices.

■When two or three GOTs are connected

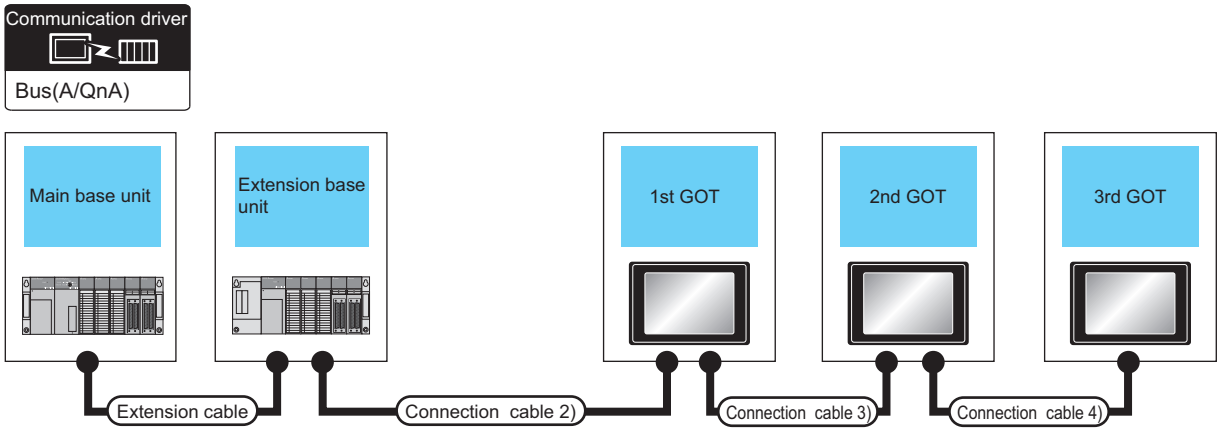

PLC *4					Connection cable 2)	GOT (1st)*3		
Main base	Extension cable*1	Extension base*2	Connection cable 1)	Bus connector conversion box		Option device*6*7*8	Model	
Main base	-	-	-	-	GT15-A1SC07B(0.7m) GT15-A1SC12B(1.2m) GT15-A1SC30B(3m)	GT15-75ABUS2L GT15-ABUS2	GT27 GT25	Refer to 1) in the table below. →
Main base	Extension cable	Extension base	-	-	GT15-A1SC07B(0.7m) GT15-A1SC12B(1.2m) GT15-A1SC30B(3m)	GT15-75ABUS2L GT15-ABUS2	GT27 GT25	2) →

Connection cable 3)		GOT (2nd)*3*4		Connection cable 4)	GOT (3rd)*3*4		Max. distance
		Option device*6*7*8	Model		Option device*6*7*8	Model	
1)	GT15-C07BS(0.7m) GT15-C12BS(1.2m) GT15-C30BS(3m) GT15-C50BS(5m) GT15-C100BS(10m) GT15-C200BS(20m) *5	GT15-75ABUS2L GT15-ABUS2	GT27 GT25	GT15-C07BS(0.7m) GT15-C12BS(1.2m) GT15-C30BS(3m) GT15-C50BS(5m) GT15-C100BS(10m) GT15-C200BS(20m) *5	GT15-75ABUSL GT15-75ABUS2L GT15-ABUS GT15-ABUS2	GT27 GT25	Between main base and GOT(1st): 3m Between GOT (1st) and GOT (3rd): 30m Between main base and GOT (3rd): 33m
2)	GT15-C07BS(0.7m) GT15-C12BS(1.2m) GT15-C30BS(3m) GT15-C50BS(5m) GT15-C100BS(10m) GT15-C200BS(20m) *5	GT15-75ABUS2L GT15-ABUS2	GT27 GT25	GT15-C07BS(0.7m) GT15-C12BS(1.2m) GT15-C30BS(3m) GT15-C50BS(5m) GT15-C100BS(10m) GT15-C200BS(20m) *5	GT15-75ABUSL GT15-75ABUS2L GT15-ABUS GT15-ABUS2	GT27 GT25	Between main base and GOT(1st): 3m (Including the extension cable length) Between GOT (1st) and GOT (3rd): 30m Between main base and GOT (3rd): 33m (Including the extension cable length)

*1 For the extension cables, refer to MELSEC-A/QnA catalog (L(NA)08024).
*2 Use the A168B for the extension base unit.
*3 GT 2705-V can be available for terminal.
*4 The number of connectable GOTs is restricted according to the CPU type and the number of intelligent function modules.
☞ Page 538 Connection to multiple GOTs
*5 When using GT15-C□BS, connect as following precautions.
☞ Page 532 GT15-C□EXSS-1, GT15-C□BS
*6 The bus connection unit
GT15-75ABUSL, GT15-ABUS: Used for a terminal GOT. (Not available for an intermediary GOT)
GT15-75ABUS2L, GT15-ABUS2: Used for an intermediary GOT. (Can be used for a terminal GOT)
*7 When using the following functions, use GT15-ABUS(2). GT15-75ABUS(2)L cannot be used.
Remote personal computer operation (Serial), video display function, multimedia function, external I/O device, RGB display function, sound output function
*8 GT25-W and GT2505-V do not support option devices.

7.3 GOT Side Settings

Setting communication interface (Controller Setting)

Set the channel of the connected equipment.

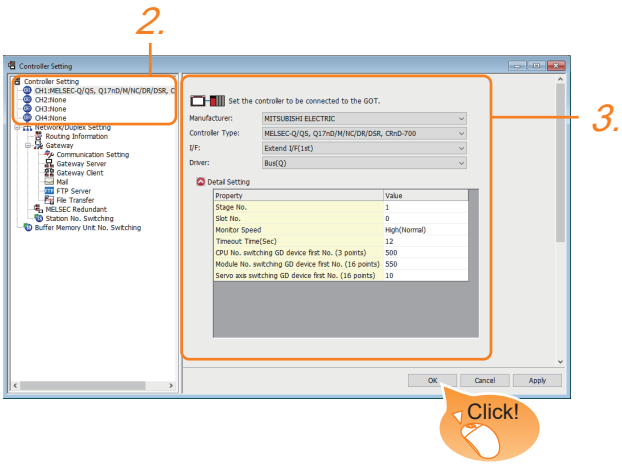

1. Select [Common] → [Controller Setting] from the menu.

2. In the [Controller Setting] window, select the channel No. to be used from the list menu.

3. Set the following items.

- [Manufacturer]: [MITSUBISHI ELECTRIC]
- [Controller Type]: Configure the setting according to the controller to be connected.
- [I/F]: Interface to be used
- [Driver]: Select one of the following items according to the controller to be connected.

[Bus(Q)]

[Bus(A/QnA)]

- [Detail Setting]: Configure the settings according to the usage environment.

☞ Page 522 Communication detail settings

4. When you have completed the settings, click the [OK] button.

Point

The settings of connecting equipment can be confirmed in [I/F Communication Setting].
For details, refer to the following.
☞ Page 54 I/F communication setting

Communication detail settings

Bus(Q)

Property	Value
Stage No.	1
Slot No.	0
Monitor Speed	High(Normal)
Timeout Time(Sec)	12
CPU No. switching GD device first No. (3 points)	500
Module No. switching GD device first No. (16 points)	550
Servo axis switching GD device first No. (16 points)	10

Item	Description	Range
Stage No. *1	(Default: 1)	1 to 7
Slot No.	(Default: 0)	0 to 9
Monitor Speed *4	Set the monitor speed of the GOT. This setting is not valid in all systems. (Default: Normal)	High (Normal) *2/Middle/Low *3
Timeout Time (Sec.)	Set the time period for a communication to time out. (Default: 12)	12 to 90
CPU No. switching GD device first No. (3 points)	Set the start device number of the GD devices for CPU No. switching. (Default: 500) For the details, refer to the following. ☞ Page 524 Start device number of the GD devices for CPU number switching	0 to 65520
Module No. switching GD device first No. (16 points)	Set the start device number of the GD devices for module No. switching. (Default: 550) For the details, refer to the following. ☞ Page 525 Start device number of the GD devices for module number switching	0 to 65520
Servo axis switching GD device first No. (16 points)	Set the servo axis switching GD device first No. (Default: 10) For the details, refer to the following. ☞ Page 526 Servo axis switching GD device first No.	0 to 65520

*1 When using a QA1S6□B extension base unit, assign the GOT as a stage next to the Q□□B extension base unit in the stage number setting.
For the details, refer to the following.
☞ Page 537 When using the QA1S6□B extension base unit

*2 This range is effective when collecting a large amount of data (such as logging and recipe function) on other than the monitor screen. However, the range may affect the sequence scan time when connecting to Q00UJ/Q00U/Q01U/Q02UCPU or Q00J/Q00/Q01CPU.
If you want to avoid the influence on the sequence scan time, do not set [High(Normal)].
(This setting hardly affects QCPUs other than the above.)

*3 Set this range if you want to avoid the influence on the sequence scan time further than the [Middle] setting when connecting to Q00UJ/Q00U/Q01U/Q02UCPU or Q00J/Q00/Q01CPU.
However, the monitor speed may be reduced.

*4 When using a global label, to read or write more than 235 two-byte characters, set the [Monitor speed] to [High (Standard)] or [Middle].
If [Monitor speed] is set to [Low], a system error occurs when reading or writing.
For details, refer to the following manual.
📖GT Designer3 (GOT2000) Screen Design Manual

Bus(A/QnA)

Property	Value
Stage No.	1
Slot No.	0
Timeout Time(Sec)	3

Item	Description	Range
Stage No.	(Default: 1)	1 to 7
Slot No.	(Default: 0)	0 to 7
Timeout Time (Sec.)	Set the time period for a communication to time out. (Default: 3)	3 to 90

Point

• Communication interface setting by Utility

The communication interface setting can be changed on the Utility's [Communication Settings] after writing [Controller Setting] of project data.

For details on the Utility, refer to the following manual.

GOT2000 Series User's Manual (Utility)

• Precedence in communication settings

When settings are made by GT Designer3 or the Utility, the latest setting is effective.

• When changing Stage No. and Slot No.

Change these settings with the PLC CPU turned OFF, and then reapply the power to the PLC CPU and GOT.

Failure to do so may generate a system alarm (No.487).

Start device number of the GD devices for CPU number switching

■Specifying a CPU number with a device

[CPU No.] can be specified with the GOT internal registers (GD devices) by specifying a value (100 to 102) to [CPU No.] in the device setting dialog in GT Designer3.

Set the start device number of the GD devices to be used in [CPU No. switching GD device first No. (3 points)].

Specify [CPU No.] with the three consecutive GD devices, starting the set device number.

When [500] is set to [CPU No. switching GD device first No. (3 points)], GD500 to GD502 are used to specify [CPU No.] as shown in the following table.

CPU No.	GD device	Setting range
100	GD500	1 to 4 Setting an invalid value causes a communication timeout error. Specifying a nonexistent CPU No. or a CPU No. not supporting a multiple CPU system with a device causes a controller error.
101	GD501	
102	GD502	

■Specifying a CPU number with a device on the initially-displayed screen

Set [CPU No. switching GD device first No. (3 points)] so that the values of the GD devices are retained and monitored upon the GOT startup.

■Specifying a CPU number with a device in a multi-channel connection

If the setting range of [CPU No. switching GD device first No. (3 points)] set in each channel overlaps, the monitoring target CPU No. set to each channel is switched simultaneously.

Set [CPU No. switching GD device first No. (3 points)] in each channel so that the setting range does not overlap.

■Specifying a CPU number and a station number with devices in a multi-channel connection

When GD10 to GD25 are used to specify the station No. of an inverter or non-Mitsubishi temperature controller connected, setting [10] to [CPU No. switching GD device first No. (3 points)] in a different channel switches the monitoring target CPU No. and station No. of an inverter or non-Mitsubishi temperature controller set to each channel simultaneously.

Set [CPU No. switching GD device first No. (3 points)] so that the setting range does not overlap the station No. of an inverter or non-Mitsubishi temperature controller.

Start device number of the GD devices for module number switching

■Specifying a module number with a device

In a connection via a simple motion module, [Unit No.] can be specified with the GOT internal registers (GD devices) by specifying a value (100 to 10F) to [Unit No.] in the device setting dialog in GT Designer3.
Set the start device number of the GD devices to be used in [Module No. switching GD device first No. (16 points)].
Specify [Unit No.] with the 16 consecutive GD devices, starting the set device number.
When [550] is set to [Module No. switching GD device first No. (16 points)], GD550 to GD565 are used to specify [Unit No.] as shown in the following table.

Unit No.	GD device	Setting range
100	GD550	The setting range depends on [Unit Type]. • When [MELSEC iQ-R, RnMT/NC/RT, CR800-D], [MELSEC iQ-R, RnMT/RT, CR800-D], [MELSEC-Q/QS, Q17nD/M/NC/DR/DSR, CRnD-700], [MELSEC-Q, Q17nD/M/DR/DSR, CRnD-700], [MELSEC-L] or [MELIPC] is selected for [Unit Type] 00 to FF • When [MELSEC iQ-F] is selected for [Unit Type] 01 to 10 Setting an invalid value causes a device range error.
101	GD551	
102	GD552	
103	GD553	
104	GD554	
105	GD555	
106	GD556	
107	GD557	
108	GD558	
109	GD559	
10A	GD560	
10B	GD561	
10C	GD562	
10D	GD563	
10E	GD564	
10F	GD565	

■Specifying a module number with a device on the initially-displayed screen

Set [Module No. switching GD device first No. (16 points)] so that the values of the GD devices are retained and monitored upon the GOT startup.

■Specifying a module number with a device in a multi-channel connection

If the setting range of [Module No. switching GD device first No. (16 points)] set in each channel overlaps, the module No. of the simple motion module via the servo amplifier device of each channel is switched simultaneously.
Set [Module No. switching GD device first No. (16 points)] for each channel so that the setting range does not overlap.

■Specifying a station number and a module number with devices in a multi-channel connection

When GD10 to GD25 are used to specify the station No. of an inverter or non-Mitsubishi temperature controller connected, setting [10] to [Module No. switching GD device first No. (16 points)] switches the module No. of the simple motion module via the servo amplifier device and the station No. of an inverter or non-Mitsubishi temperature controller set to each channel simultaneously.
Set [Module No. switching GD device first No. (16 points)] so that the setting range does not overlap the station No. of an inverter or non-Mitsubishi temperature controller.

Servo axis switching GD device first No.

■Indirect specification of the servo axis No.

In a connection via a Motion CPU or Simple Motion module, a servo axis No. can be indirectly specified with GOT internal registers (GD devices) by specifying a value (100 to 115) to the axis No. of the servo amplifier device.
Set the start device number of the GD devices to be used in [Servo axis switching GD device first No. (16 points)].
Specify a servo axis number with 16 consecutive GD devices, starting the set device number.
When [10] is set to [Servo axis switching GD device first No. (16 points)], GD10 to GD25 are used to specify a servo axis number as shown in the following table.

Servo axis No.	GD device	Setting range
100	GD10	1 to 64 Setting an invalid value causes a device range error.
101	GD11	
102	GD12	
103	GD13	
104	GD14	
105	GD15	
106	GD16	
107	GD17	
108	GD18	
109	GD19	
110	GD20	
111	GD21	
112	GD22	
113	GD23	
114	GD24	
115	GD25	

■Specifying a servo axis number with a device on the initially-displayed screen

Set [Servo axis switching GD device first No. (16 points)] so that the values of the GD devices are retained and monitored upon the GOT startup.

■Specifying a servo axis number with a device in a multi-channel connection

If the setting rage of [Servo axis switching GD device first No. (16 points)] set in each channel overlaps, the axis No. of the servo amplifier of each channel is switched simultaneously.
Set [Servo axis switching GD device first No. (16 points)] for each channel so that the setting range does not overlap.

■Specifying a station number and a servo axis number with devices in a multi-channel connection

When GD10 to GD25 are used to specify the station No. of an inverter or non-Mitsubishi temperature controller connected, setting [10] to [Servo axis switching GD device first No. (16 points)] switches the axis No. of the servo amplifier and the station No. of an inverter or non-Mitsubishi temperature controller set to each channel simultaneously.
Set [Servo axis switching GD device first No. (16 points)] so that the setting range does not overlap the station No. of an inverter or non-Mitsubishi temperature controller.

Point

Cutting the portion of multiple connection of the controller

By setting GOT internal device, GOT can cut the portion of multiple connection of the controller. For example, faulty station that has communication timeout can be cut from the system.

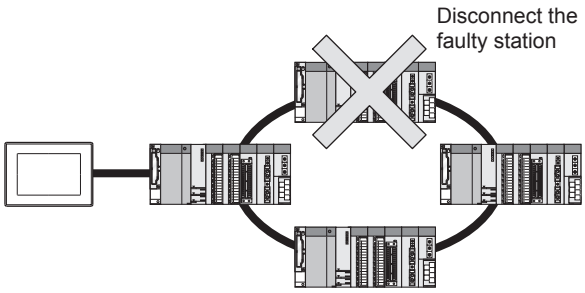

For details of the setting contents of GOT internal device, refer to the following manual.

GT Designer3 (GOT2000) Screen Design Manual

Setting Stage No. and Slot No.

Point

Before setting Stage No. and Slot No.

The PLC CPU recognizes the GOT as follows.

• QCPU (Q mode)

: Intelligent function module of 16 I/O points

• Other than QCPU (Q mode)

: Intelligent function module of 32 I/O points

At the [Detail setting], assign the GOT to an empty I/O slot on the PLC CPU.

■When connecting to QCPU (Q mode)

Set an additional stage (16 points × 10 slots) for GOT connection, and assign a GOT to one of the I/O slots.

(The GOT cannot be assigned to empty slots of the main base unit or extension base unit.)

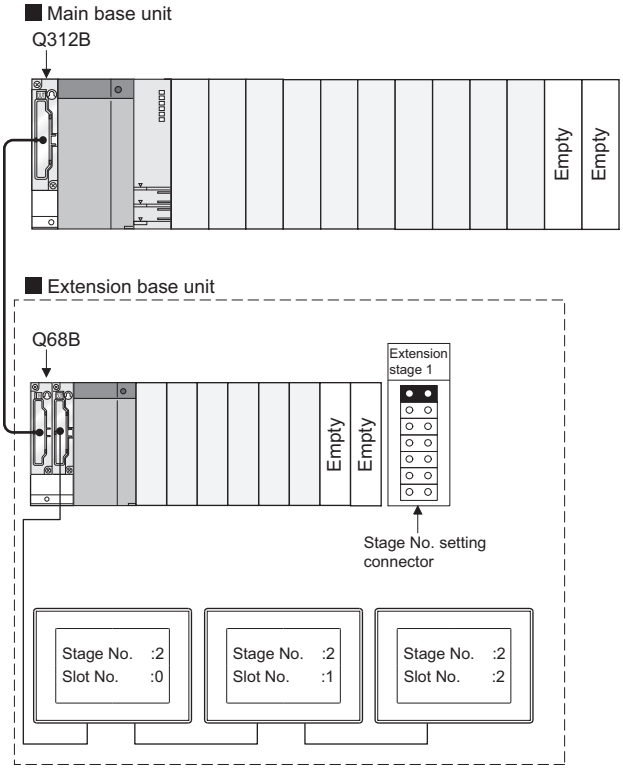

Point

When using the bus extension connector box

Set the Stage No. switch on the bus extension connector box to the same Stage No. as the GOT.

For setting details, refer to the following manual:

📖A9GT-QCNB Bus Extension Connector Box User's Manual

Point

When connecting to Motion CPU (Q Series)

In the [Base Setting] on MT Developer, set "10" to the number of slots for the extension base used for GOT connection.

Example: When setting "2" to Stage No. and "0" to Slot No. in the communication interface settings, set "10" to [2nd Stage].

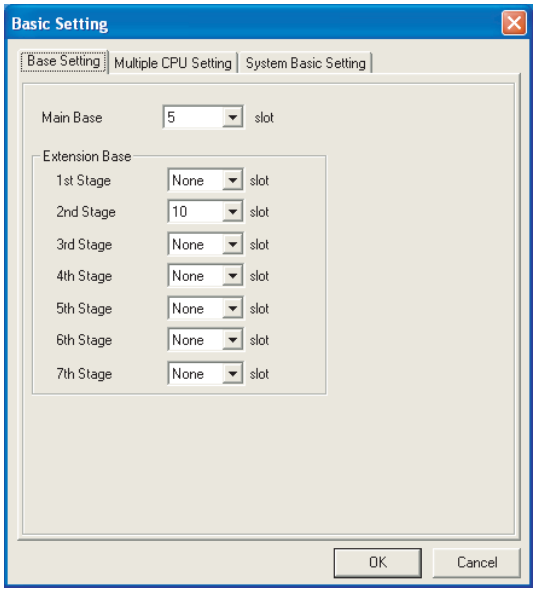

Point

Setting unused I/O slots to empty (0 points) (only when connecting to QCPU (Q mode))

Setting unused I/O slots as empty slots (0 points) from "PC parameters" "I/O assignments" of GX Developer allows you to use I/O numbers of "16 points × number of empty slots" for other purposes.

For details on I/O assignment settings, refer to the following manual:

QnU User's Manual (Function Explanation, Program Fundamentals)

Qn(H)/QnPH/QnPRHCPU User's Manual (Function Explanation, Program Fundamentals)

Example: I/O assignment (when 16 points are assigned to each of all modules installed with the PLC CPU)

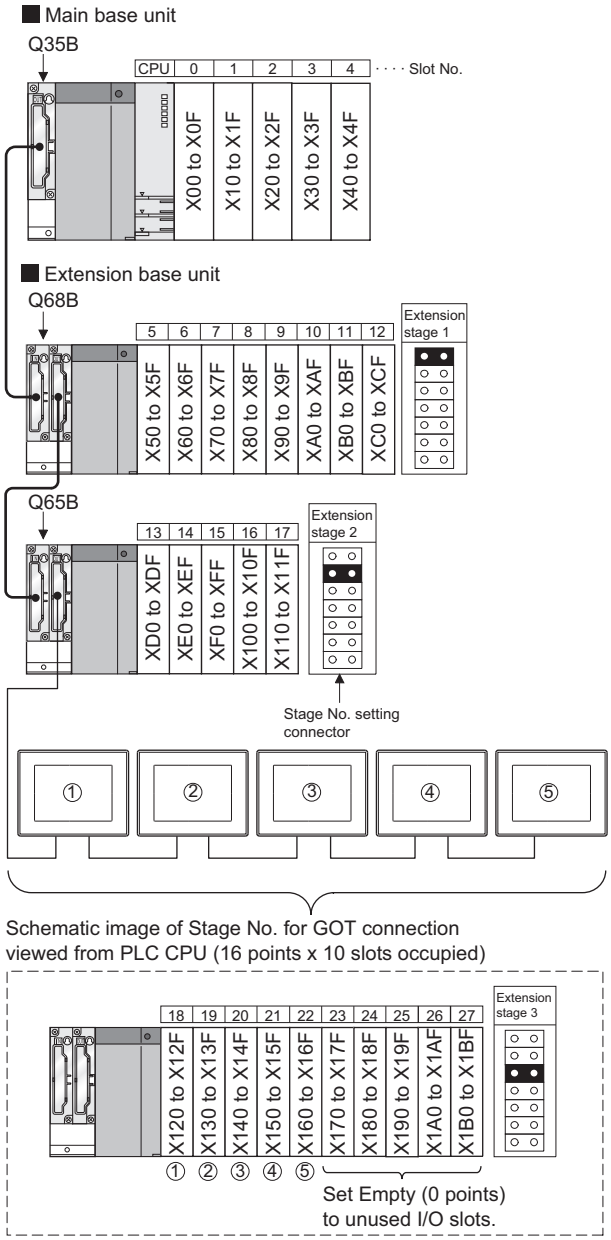

■Other than QCPU (Q mode)

Assign the GOT to an empty I/O slot on the extension base unit.

When there is no extension base unit or no empty I/O slots are left on an extension base unit, set an additional stage, and assign the GOT to one of the I/O slots.

(Assigning the GOT to an empty slot on the main base unit is not allowed.)

- When there is an empty I/O slot on the extension base unit

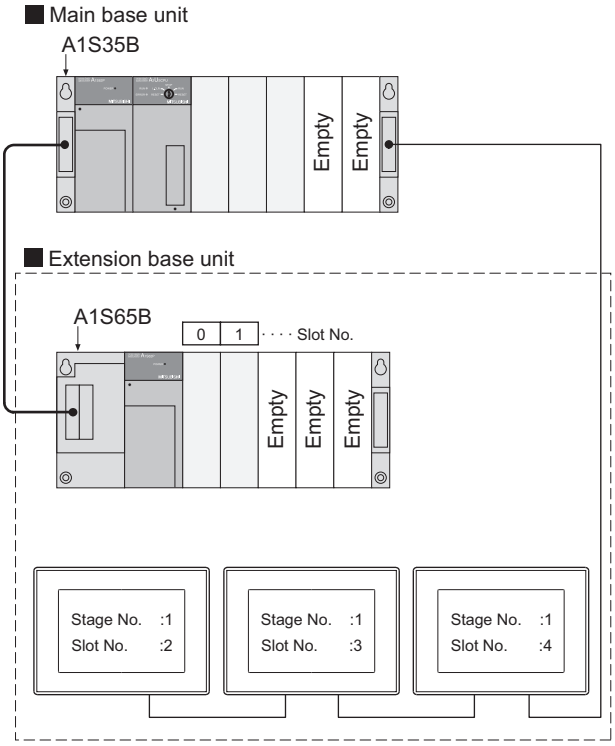

- When there are no empty I/O slots on the extension base unit

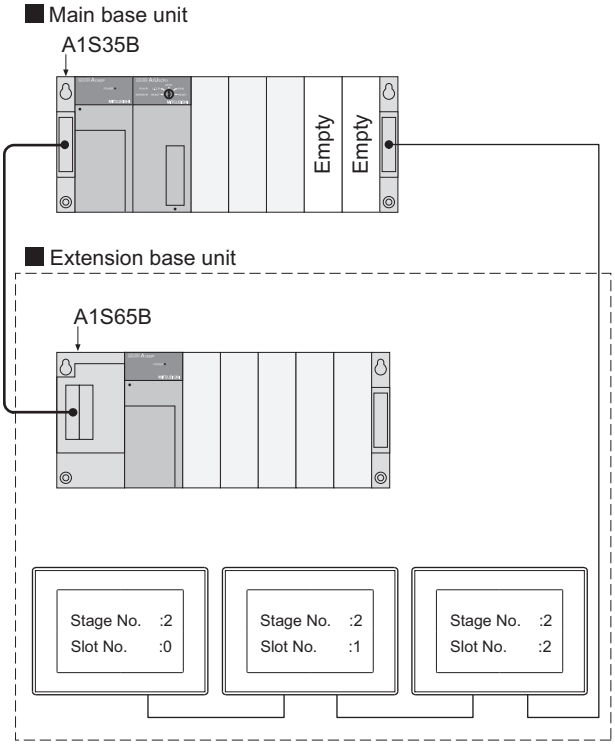

7.4 Precautions

GT15-C□EXSS-1, GT15-C□BS

Composition of GT15-C□EXSS-1

It is composed of GT15-EXCNB (0.5m) and GT15-C□BS (10 to 30m).

Calculate the cable length based on GT15-C100EXSS-1(10m), GT15-C200EXSS-1(20m) and GT15-C300EXSS-1(30m).

GT15-C□EXSS-1 connector

Connect the connectors as follows:

GT15-EXCNB → PLC CPU side

GT15-C□BS → GOT side

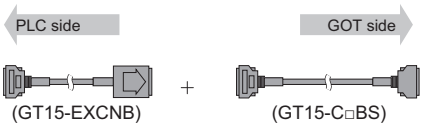

Grounding

■When using GT15-C□EXSS-1

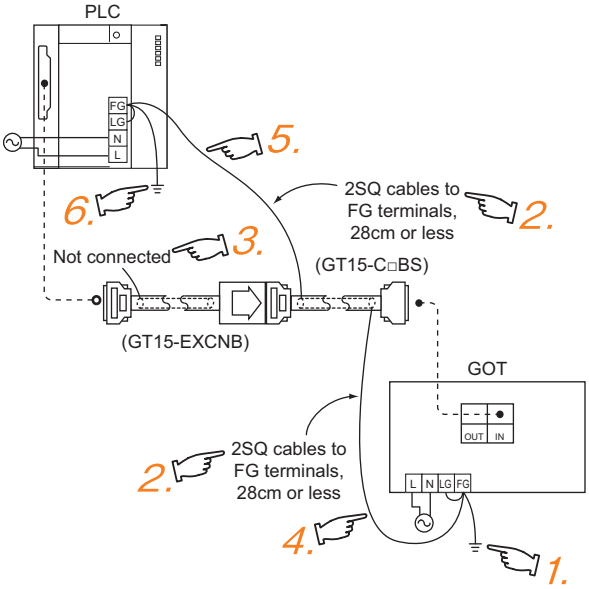

1. Connect the LG and FG terminals of the terminal block on the GOT unit power and ground them with a cable.
2. Use the GT15-C□BS's FG cable of 28cm or less.
3. Do not connect the GT15-EXCNB's FG ground cable.
4. Connect the GT15-C□BS's FG cable on the GOT side to FG of the GOT unit power's terminal block.
5. Connect the GT15-C□BS's FG cable on the PLC side to FG of the PLC's power supply module.
6. Connect the LG and FG terminals of the terminal block on the PLC and ground them with a cable.

■When using GT15-C□BS

Follow the GOT side grounding steps in (a) above for both GOTs.

Turning the GOT ON

System configuration

The PLC CPU remains in the reset status until the GOT is started.
Therefore, no sequence program will run until then.
The system configuration, in which the GOT is turned on from a sequence program, is not available.

Time taken until the PLC runs after power-on of the GOT

The following time is taken from when the GOT is powered on until when the PLC runs.
QCPU (Q mode), Motion CPU (Q series): 10 seconds or more
MELDAS C70: 18 seconds or more
When the GOT starts before the PLC runs, a system alarm occurs.Adjust the opening screen time in the GOT setup so that no system alarm occurs.
📖GT Designer3 (GOT2000) Screen Design Manual

Power-on order of the GOTs and PLC

- Power-up sequence for connection of 3 GOTs or more (when connecting QCPU (Q mode))

For the power-on order, refer to the following.
☞ Page 535 Restrictions in overall cable length to No. of GOTs

- Power-up sequence for connection of the Q4ARCPU redundant system

For the power-on order, refer to the following.
☞ Page 540 Power-On sequence for GOT and Q4ARCPU redundant system

- Power-on order of the other GOTs and PLCs

The GOT and PLC can both be started up whichever of these devices is turned ON first. (There is no specific sequence in which they are powered ON)
Note, however, that operation is as follows when the GOT is turned ON followed by the PLC:
When the PLC power is OFF with the GOT turned ON, the system alarm (No.402: timeout error) is generated.
Upon power-on of the PLC CPU, the GOT automatically starts monitoring.
Use System Information to reset the alarm.
For the System Information, refer to the following manual:
📖GT Designer3 (GOT2000) Screen Design Manual

Powering OFF the GOT, reapplying the power (OFF to ON)

Precautions for reapplying the power to the GOT (OFF to ON)

Do not perform power-off and then power-on of the GOT while the GOT is communicating with the PLC.
Depending on the power-off timing, communication with the PLC is disabled.
Before doing so, be sure to turn off the PLC first.

Point

When one of the following operations is performed, the GOT is automatically restarted. You do not need to turn off the PLC.

- Writing a package data from GT Designer3 or a data storage location
- When utility settings have been changed

When turning OFF the GOT before display of the user creation screen

When the GOT is turned OFF before the user creation screen is displayed on the GOT, subsequent communications may be no longer possible.
In such a case, reapply the power to the PLC CPU and GOT.

Precautions for connection of 3 GOTs or more (when connecting QCPU (Q mode))

☞ Page 535 Restrictions in overall cable length to No. of GOTs

Reset switch on GOT

When bus connection is used, the reset switch on the GOT does not function.

Powering OFF or resetting the PLC

When turning OFF or resetting the PLC during monitoring

When turning OFF or resetting the PLC during monitoring, the system alarm (No.402: timeout error) is generated.
When the PLC CPU is restored, the GOT automatically resumes monitoring.
Use System Information to reset the alarm.
For the System Information, refer to the following manual:
📖GT Designer3 (GOT2000) Screen Design Manual

When turning OFF or resetting the PLC CPU before display of the user creation screen

When the PLC CPU is turned OFF or reset before the user creation screen is displayed on the GOT, subsequent communications may be no longer possible.
In such a case, reapply the power to the PLC CPU and GOT.

Precautions for connection of 3 GOTs or more (when connecting QCPU (Q mode))

☞ Page 535 Restrictions in overall cable length to No. of GOTs

Position of the GOT

Always connect the GOT to the last base unit.
Connecting a GOT between base units is not allowed.

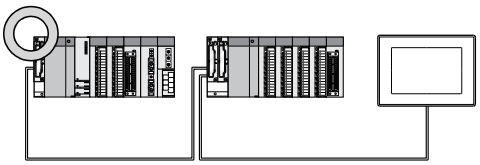

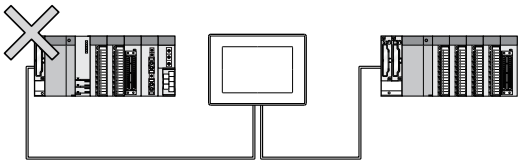

When the GOT is bus-connected to a PLC CPU without the communication driver written

When the GOT is bus-connected to a PLC CPU without the standard monitor OS and the communication driver for the bus connection being written onto the GOT, the PLC CPU is reset. (GX Developer cannot communicate with the PLC CPU)
In this case, disconnecting the bus connection cable from the GOT will cancel the reset status of the PLC CPU.

When designing the system

When the GOT is OFF, the following currents are supplied to the GOT from the PLC CPU side (the power supply module on the main base unit).(The GOT does not operate when it is OFF.)
Design the system so that the 5V DC current consumption of the modules on the main base unit and the total current consumption of the GOTs will not exceed the rated output current of 5V DC of the power supply module in use.

When connecting to	No. of GOTs	Total current consumption
When connecting to QCPU (Q mode)	5	2200mA
	4	1760mA
	3	1320mA
	2	880mA
	1	440mA
Other than QCPU (Q mode)	3	360mA
	2	240mA
	1	120mA

When assigning GOT I/O signals

Do not use the I/O signals assigned to the PLC CPU in sequence programs, as these signals are used by the GOT system. When these signals are used, GOT functions cannot be assured.

Connection to a QCPU (Q mode)

Restrictions in overall cable length to No. of GOTs

The following restrictions apply when 3 of more GOTs are connected:

Number of GOTs	Overall Cable Length	Restriction	Overall Cable Length	Restriction
1	(No restrictions)			
2				
3	Less than 25m	(No restrictions)	25 to 37m	Use the same power supply for the PLC and all GOTs, and turn these devices ON and OFF simultaneously.
4	Less than 20m		20 to 37m	
5	Less than 15m		15 to 37m	

When using the Q00JCPU, Q00UJCPU, or Q00UJCPU-S8

The bus extension connector box can be connected only to the extension base unit.
(Connecting it to the main base unit is not allowed)

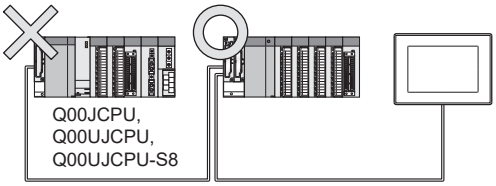

When using a Q00J/Q00UJ/Q00/Q00U/Q01/Q01U/Q02UCPU

When a GOT is bus-connected to a Q00JCPU, Q00UJCPU, or Q00UJCPU-S8, number of extension stages including the GOT must be 2 or less.
When a GOT is bus-connected to a Q00CPU, Q00UCPU, Q01CPU, Q01UCPU or Q02UCPU, number of extension stages including the GOT must be 4 or less.

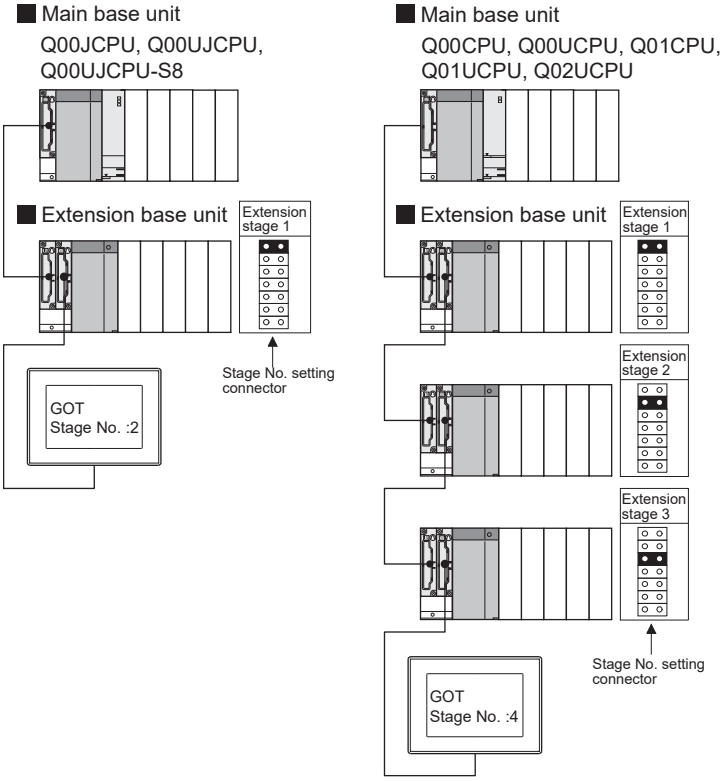

When using the QA1S6□B extension base unit

A GOT is physically connected to the last of all extension base units. In the Stage No. setting, however, assign the GOT as a stage next to the last Q□□B type extension base unit.
Assign the QA1S6□B type extension base unit as a stage next to the GOT.

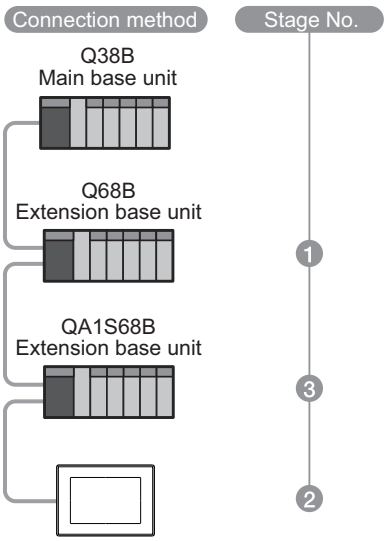

Connection to a QnA(S)CPU or An(S)CPU type

When connecting with a QnASCPU type and an AnSCPU type

A GOT can be connected to an extension connector on only one side of the main base unit.
(Concurrently connecting GOTs to extension connectors on both sides is not allowed)

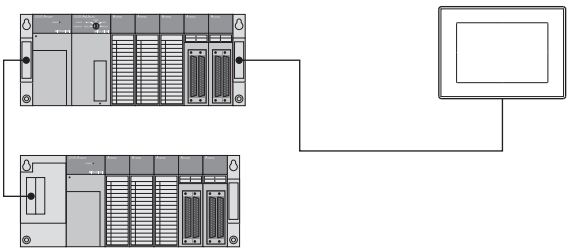

In the case of Q4A(R)CPU, Q3ACPU, A3□CPU, A4UCPU

Empty I/O slots are required within the max. number of extension stages.

For A0J2HCPU

Assign the GOT to the I/O slots 0 to 3 of extension stage 1.

For the CPU other than Q4A(R)CPU, Q3ACPU, A3□CPU, A4UCPU, and A0J2HCPU

Even if the max. number of stages are used with no empty I/O slots, when there is a free space of 32 I/O points or more, a GOT can be connected under the following communication interface setting.
For the communication interface setting, refer to the following.
☞ Page 521 Setting communication interface (Controller Setting)

When connecting to	Max. stage No.	Communication interface setting	
		Stage No.	Slot No.
A1□CPU/A2USCPU(-S1)/QnAS(H)CPU(-S1)	1	2	0
A2□CPU/Q2ACPU	3	4	0
A3□CPU/A4□CPU	7	Cannot be used	
Q3ACPU/Q4ACPU	7		
A0J2HCPU	1		

Connection to multiple GOTs

System including different GOT series

The GOT2000 series can be connected with GOT1000 series and GOT-A900 series in a system.

When using them together, refer to the following Technical News.

📖Precautions when Replacing GOT1000 Series with GOT2000 Series (GOT-A-0061)

📖Precautions when Replacing GOT-A900 Series with GOT2000 Series (GOT-A-0062)

The GOT2000 series cannot be used with GOTs other than GOT1000 or GOT-A900 series in a system.

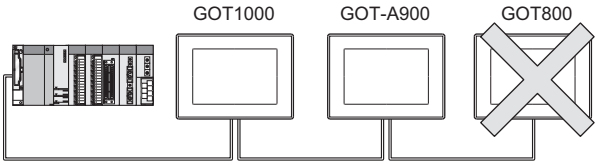

Restrictions on No. of GOTs

The number of connectable GOTs is restricted according to the CPU type and the number of intelligent function modules.

When connecting to		Number of connectable GOTs	Total number of connectable GOTs and intelligent function modules*1
QCPU(Q mode), motion CPU (Q Series)		Up to 5	5 GOTs+ 6 intelligent function modules*2
QCPU (A mode)		Not connectable	————
QnACPU		Up to 3	6 in total
ACPU	AnUCPU, AnACPU, A2US(H)CPU	Up to 3	6 in total
	AnNCPU, AnS(H)CPU, A1SJ(H)CPU	Up to 2	2 in total
	A0J2HCPU	Up to 1	2 in total
	A1FXCPU	Not connectable	————
Motion CPU (A Series)	A273UCPU, A273UHCPU(-S3), A373UCPU(-S3), A173UHCPU(-S1)	Up to 3	6 in total
	A171SHCPUN, A172SHCPUN	Up to 2	2 in total

*1 Indicates the following models:
AD51(S3), AD51H(S3), AD51FD(S3), AD57G(S3), AJ71C21(S1), AJ71C22(S1), AJ71C23, AJ71C24(S3/S6/S8), AJ71UC24, AJ71E71(-S3), AJ71E71N-B2/B5/T/B5T, AJ71E71N3-T, AJ61BT11 (in intelligent mode only), A1SJ71C24(-R2/PRF/R4), A1SJ71UC24(-R2/PRF/R4), A1SJ71E71-B2/B5(-S3), A1SJ71E71N-B2/B5/T/B5T, A1SJ71E71N3-T, A1SD51S, A1SJ61BT11 (in intelligent mode only)

*2 Only the A1SD51S can be connected to the QCPU (Q Mode).

When using a PLC CPU in the direct mode

Note that when the I/O control mode of the PLC CPU is the direct mode, and if the 1st GOT is connected to the main or extension base unit with a 5m extension cable (GT15-AC50B, GT15-A1SC50NB), the input X of the empty I/O slot cannot be used.

No restrictions apply when the I/O control mode is the refresh mode.

On PLC CPUs whose I/O control mode can be selected by a switch, set the I/O control mode to the refresh mode before use.

Point

In the cases where input X of an empty I/O slot is used

- When input X is assigned on the MELSECNET/10 network
- When input X of an empty I/O slot is turned ON/OFF by the computer link module
- When input X of the I/O slot is turned ON/OFF by the touch switch function (Bit SET/RST/Alternate/Momentary) of GOT

Connection to a Q4ARCPU redundant system

When the GOT is bus-connected to a Q4ARCPU redundant system

Connect the GOT to the last redundant extension base unit (A68RB) of the Q4ARCPU redundant system.

For the redundant extension base units, use version B or later.

The version can be confirmed in the DATE field of the rating plate.

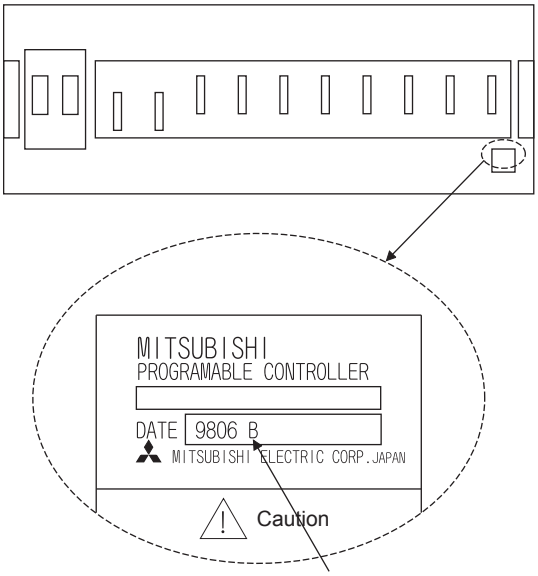

Version of redundant extension base unit

Enlarged view of rating plate

Point

Precautions for Q4ARCPU redundant system configurations

The GOT does not operate normally in the following system configurations.

- When the GOT is bus connected to the bus switching module (A6RAF) on a redundant main base unit (A32RB/A33RB)
- When the GOT is bus connected to a version-A redundant main base unit (A68RB)

Power-On sequence for GOT and Q4ARCPU redundant system

Apply the power to the GOT and Q4ARCPU redundant system in the following sequence.

1. Turn ON the GOT.
2. After the monitor screen is displayed on the GOT, turn ON the Q4ARCPU redundant system.

At this time, a timeout is displayed on the system alarm. Use System Information to reset the alarm.

For the system alarm, refer to the following manual:

GT Designer3 (GOT2000) Screen Design Manual

When monitoring Q170MCPU, Q170MSCPU(-S1)

Set [CPU No.] to 2 in the device setting to monitor the device of the Motion CPU area (CPU No. 2).

When [CPU No.] is set to 0 or 1, the device on the PLC CPU area (CPU No. 1) is monitored.

When [CPU No.] is set to the number other than 0 to 2, a communication error occurs and the monitoring cannot be executed.

For the setting of [CPU No.], refer to the following.

GT Designer3 (GOT2000) Screen Design Manual

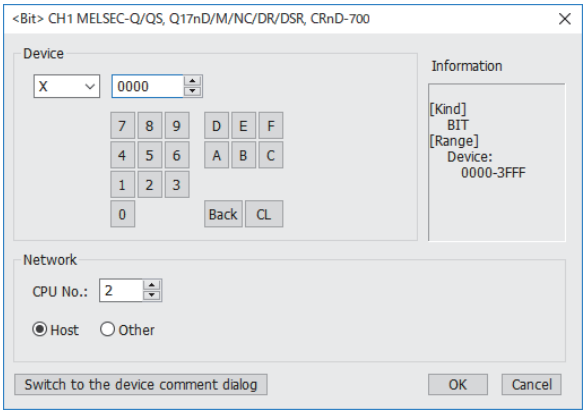

Troubleshooting

For the troubleshooting, refer to the User's Manual for the GOT you are using.

8 MELSECNET/H, MELSECNET/10 CONNECTION (PLC TO PLC NETWORK)

- Page 541 Connectable Model List
- Page 548 System Configuration
- Page 552 GOT Side Settings
- Page 559 PLC side setting when connecting to MELSECNET/H
- Page 568 PLC side setting when connecting to MELSECNET/10
- Page 592 Precautions

8.1 Connectable Model List

Point

• Connectable network

For MELSECNET/H connection, use the MNET/H mode or MNET/H extension mode with MELSECNET/H.

Connect the GOT to the following network systems as an ordinary station.

MELSECNET/H network system (PLC to PLC network) optical loop system

MELSECNET/H network system (PLC to PLC network) coaxial bus system

The GOT cannot be connected to the remote I/O network.

For MELSECNET/10 connection, use the MNET/10 mode with MELSECNET/H.

MELSECNET/10 network system (PLC to PLC network) optical loop system

MELSECNET/10 network system (PLC to PLC network) coaxial bus system

The GOT cannot be connected to the remote I/O network.

• MELSECNET/H network module

When connecting the MELSECNET/H network module to the MELSECNET/H network system, specify the MELSECNET/H Mode or the MELSECNET/H Extended Mode as a network type.

When connecting the MELSECNET/H network module to the MELSECNET/10 network system, specify the MNET/10 mode as a network type.

PLC/Motion CPU

The following table shows the connectable models.

Series	Model name	Clock	Communication type	Connectable model	Refer to
MELSEC iQ-R Series	R00CPU	○	MELSECNET/H MELSECNET/10	-	-
	R01CPU				
	R02CPU				
	R04CPU				
	R08CPU				
	R16CPU				
	R32CPU				
	R120CPU				
	R08PCPU				
	R16PCPU				
	R32PCPU				
	R120PCPU				
	R04ENCPU				
	R08ENCPU				
	R16ENCPU				
	R32ENCPU				
	R120ENCPU				
	R08PSFCPU				
	R16PSFCPU				
	R32PSFCPU				
	R120PSFCPU				
	R08SFCPU				
	R16SFCPU				
	R32SFCPU				
	R120SFCPU				
Motion CPU (MELSEC iQ-R Series)	R16MTCPU	○	MELSECNET/H MELSECNET/10	-	-
	R32MTCPU				
	R64MTCPU				
C Controller module (MELSEC iQ-R Series)	R12CCPU-V	○	MELSECNET/H MELSECNET/10	-	-
MELSECWinCPU (MELSEC iQ-R Series)	R102WCPU-W	×	MELSECNET/H MELSECNET/10	-	-
CNC C80	R16NCCPU-S1	○	MELSECNET/H MELSECNET/10	-	-
Robot controller (MELSEC iQ-R Series)	CR800-R(R16RTCPU)	○	MELSECNET/H MELSECNET/10	-	-
CC-Link IE Field Network head module	RJ72GF15-T2	×	MELSECNET/H MELSECNET/10	-	-
MELSEC iQ-F Series	FX5U	○	MELSECNET/H MELSECNET/10	-	-
	FX5UC				
	FX5UJ				
	FX5S				

Series	Model name	Clock	Communication type	Connectable model	Refer to
MELSEC-Q (Q mode)	Q00JCPU	○	MELSECNET/H MELSECNET/10	GT 27 GT 25 *1	☞ Page 548 System Configuration
	Q00CPU				
	Q01CPU				
	Q02CPU				
	Q02HCPU				
	Q06HCPU				
	Q12HCPU				
	Q25HCPU				
	Q02PHCPU				
	Q06PHCPU				
	Q12PHCPU				
	Q25PHCPU				
	Q12PRHCPU (Main base)				
	Q25PRHCPU (Main base)				
	Q12PRHCPU (Extension base)	○	-	-	-
	Q25PRHCPU (Extension base)				
	Q00UJCPU Q00UJCPU-S8	○	MELSECNET/H MELSECNET/10	GT 27 GT 25	☞ Page 548 System Configuration
	Q00UCPU				
	Q01UCPU				
	Q02UCPU				
	Q03UDCPU				
	Q04UDHCPU				
	Q06UDHCPU				
	Q10UDHCPU				
	Q13UDHCPU				
	Q20UDHCPU				
	Q26UDHCPU				
	Q03UDECPU Q04UDEHCPU Q06UDEHCPU Q10UDEHCPU Q13UDEHCPU Q20UDEHCPU Q26UDEHCPU Q50UDEHCPU Q100UDEHCPU Q03UDVCPU Q04UDVCPU Q06UDVCPU Q13UDVCPU Q26UDVCPU	○	MELSECNET/H MELSECNET/10	GT 27 GT 25	☞ Page 548 System Configuration
C Controller module (Q Series)	Q12DCCPU-V*2 Q24DHCCPU-V/VG Q24DHCCPU-LS Q26DHCCPU-LS	○	MELSECNET/H MELSECNET/10	GT 27 GT 25	☞ Page 548 System Configuration
MELSEC-QS	QS001CPU	○	MELSECNET/H MELSECNET/10	GT 27 GT 25	☞ Page 548 System Configuration
MELSEC-L	L02CPU L06CPU L26CPU L26CPU-BT L02CPU-P L06CPU-P L26CPU-P L26CPU-PBT L02SCPU L02SCPU-P	○	-	-	-

Series	Model name	Clock	Communication type	Connectable model	Refer to
MELSEC-Q (A mode)	Q02CPU-A Q02HCPU-A Q06HCPU-A	○	MELSECNET/10	GT 27 GT 25	☞ Page 548 System Configuration
MELSEC-QnA (QnACPU)	Q2ACPU Q2ACPU-S1 Q3ACPU Q4ACPU Q4ARCPU	○	MELSECNET/10	GT 27 GT 25	☞ Page 548 System Configuration
MELSEC-QnA (QnASCPU)	Q2ASCPU Q2ASCPU-S1 Q2ASHCPU Q2ASHCPU-S1	○	MELSECNET/10	GT 27 GT 25	☞ Page 548 System Configuration
MELSEC-A (AnCPU)	A2UCPU A2UCPU-S1 A3UCPU A4UCPU	○	MELSECNET/10	GT 27 GT 25	☞ Page 548 System Configuration
	A2ACPU A2ACPUP21 A2ACPUR21 A2ACPU-S1 A2ACPUP21-S1 A2ACPUR21-S1 A3ACPU A3ACPUP21 A3ACPUR21 A1NCPU A1NCPUP21 A1NCPUR21 A2NCPU A2NCPUP21 A2NCPUR21 A2NCPU-S1	○	-	-	-
	A2NCPUP21-S1	○	-	-	-
	A2NCPUR21-S1				
	A3NCPU				
	A3NCPUP21				
	A3NCPUR21				
MELSEC-A (AnSCPU)	A2USCPU	○	MELSECNET/10	GT 27 GT 25	☞ Page 548 System Configuration
	A2USCPU-S1				
	A2USHCPU-S1				
	A1SCPU	○	-	-	-
	A1SCPUC24-R2				
	A1SHCPU				
	A2SCPU				
	A2SCPU-S1				
	A2SHCPU				
	A2SHCPU-S1				
	A1SJCPU				
	A1SJCPU-S3				
	A1SJHCPU				

Series	Model name	Clock	Communication type	Connectable model	Refer to
MELSEC-A	A0J2HCPU	×	-	-	-
	A0J2HCPUP21				
	A0J2HCPUR21				
	A0J2HCPU-DC24				
	A2CCPU	○	-	-	-
	A2CCPUP21				
	A2CCPUR21				
	A2CCPUC24				
	A2CCPUC24-PRF				
	A2CJCPU-S3				
	A1FXCPU				
Motion CPU (Q Series)	Q172CPU*3*4	○	MELSECNET/H MELSECNET/10	GT 27 GT 25	☞ Page 548 System Configuration
	Q173CPU*3*4				
	Q172CPUN*3				
	Q173CPUN*3				
	Q172HCPU				
	Q173HCPU				
	Q172DCPU				
	Q173DCPU				
	Q172DCPU-S1				
	Q173DCPU-S1				
	Q172DSCPU				
	Q173DSCPU				
	Q170MCPU*5				
	Q170MSCPU*6				
	Q170MSCPU-S1*6				
	MR-MQ100	○	-	-	-
Motion CPU (A Series)	A273UCPU	○	MELSECNET/10	GT 27 GT 25	☞ Page 548 System Configuration
	A273UHCPU				
	A273UHCPU-S3				
	A373UCPU				
	A373UCPU-S3	○	-	-	-
	A171SCPU				
	A171SCPU-S3				
	A171SCPU-S3N				
	A171SHCPU				
	A171SHCPUN				
	A172SHCPU				
	A172SHCPUN				
	A173UHCPU	○	MELSECNET/10	GT 27 GT 25	☞ Page 548 System Configuration
	A173UHCPU-S1				
MELSEC-WS	WS0-CPU0	×	-	-	-
	WS0-CPU1				
	WS0-CPU3				
MELSECNET/H Remote I/O station	QJ72LP25-25	×	-	-	-
	QJ72LP25G				
	QJ72BR15				
CC-Link IE Field Network head module	LJ72GF15-T2	×	-	-	-
CC-Link IE Field Network Ethernet adapter module	NZ2GF-ETB	×	-	-	-
CNC C70	Q173NCCPU	○	MELSECNET/H MELSECNET/10	GT 27 GT 25	☞ Page 548 System Configuration

Series	Model name	Clock	Communication type	Connectable model	Refer to
Robot controller (Q Series)	CRnQ-700 (Q172DRCPU) CR800-Q (Q172DSRCPU)	○	MELSECNET/H MELSECNET/10	GT 27 GT 25	☞ Page 548 System Configuration
MELSEC-FX	FX0	×	-	-	-
	FX0S				
	FX0N				
	FX1				
	FX2	×			
	FX2C				
	FX1S	○			
	FX1N				
	FX2N				
	FX1NC				
	FX2NC	×			
	FX3S	○			
	FX3G				
	FX3GC				
	FX3GE				
	FX3U				
	FX3UC				

*1 Use CPU function version B or a later version.
*2 Use a module with the upper five digits later than 12042.
*3 When using SV13, SV22, or SV43, use a Motion CPU with the following version of OS installed.
- SW6RN-SV13Q□: 00H or later
- SW6RN-SV22Q□: 00H or later
- SW6RN-SV43Q□: 00B or later

*4 Use main modules with the following product numbers.
- Q172CPU: Product number N******* or later
- Q173CPU: Product number M******* or later

*5 Only the first step can be used on the extension base unit (Q52B/Q55B).
*6 The extension base unit (Q5□B/Q6□B) can be used.

MELSECNET/H network module

CPU series	Model name	
	Optical loop	Coaxial bus
MELSEC-Q (Q mode)*1 MELSEC-QS Motion CPU (Q series) CNC C70 Robot controller (CRnQ-700) CR800-Q (Q172DSRCPU)	QJ71LP21 QJ71LP21-25 QJ71LP21S-25	QJ71BR11*1
C Controller module (Q Series)	QJ71LP21-25 QJ71LP21S-25	QJ71BR11*1

*1 Use function version B or later of the MELSECNET/H network module and CPU.

MELSECNET/H (NET/10 mode), MELSECNET/10 network module

CPU series	Model name	
	Optical loop	Coaxial bus
MELSEC-Q (Q mode)*1 MELSEC-QS Motion CPU (Q series) CNC C70 Robot controller (CRnQ-700) CR800-Q (Q172DSRCPU)	QJ71LP21, QJ71LP21-25 QJ71LP21S-25	QJ71BR11*1
C Controller module (Q Series)	QJ71LP21-25, QJ71LP21S-25	QJ71BR11*1
MELSEC-QnA (QnACPU) MELSEC-QnA (QnASCPU)	AJ71QLP21,AJ71QLP21S A1SJ71QLP21 *2, A1SJ71QLP21S *2	AJ71QBR11 A1SJ71QBR11 *2
MELSEC-Q (A mode) MELSEC-A (AnCPU) MELSEC-A (AnSCPU) Motion CPU (A Series)	AJ71LP21 A1SJ71LP21 *3	AJ71BR11 A1SJ71BR11 *3

*1 Use function version B or later of the MELSECNET/H network module and CPU.
*2 Only available for MELSEC-QnA (QnASCPU).
*3 Only available for MELSEC-Q (A mode), MELSEC-A (AnSCPU), and Motion CPU (A series) small type.

8.2 System Configuration

Connection to optical loop system

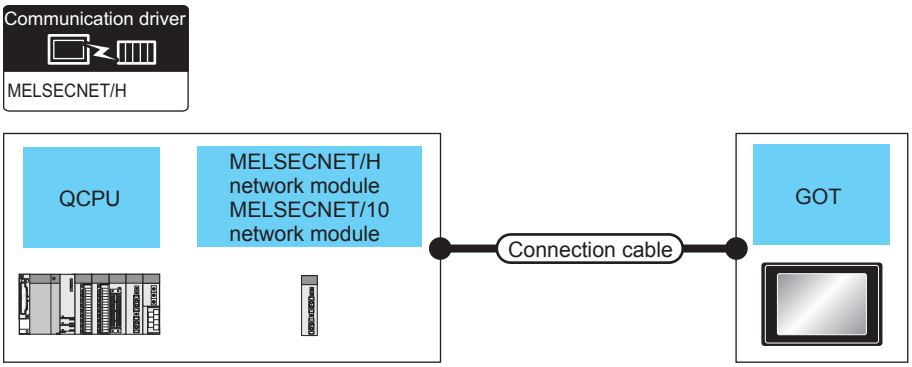

PLC			Connection cable		GOT		Number of connectable equipment
Model name	**MELSECNET/H network module*1**	**Communication type**	**Cable model**	**Max. distance**	**Option device*5**	**Model**	
MELSEC-Q	QJ71LP21 QJ71LP21-25 QJ71LP21S-25	MELSECNET/H	Optical fiber cable*2	*3	GT15-J71LP23-25	GT27 GT25	63 GOTs
		MELSECNET/10	Optical fiber cable*2	*3	GT15-J71LP23-25*4	GT27 GT25	
C Controller module (Q Series)	QJ71LP21-25 QJ71LP21S-25	MELSECNET/H	Optical fiber cable*2	*3	GT15-J71LP23-25	GT27 GT25	
		MELSECNET/10	Optical fiber cable*2	*3	GT15-J71LP23-25*4	GT27 GT25	
MELSEC-QS	QJ71LP21 QJ71LP21-25 QJ71LP21S-25	MELSECNET/H	Optical fiber cable*2	*3	GT15-J71LP23-25	GT27 GT25	
		MELSECNET/10	Optical fiber cable*2	*3	GT15-J71LP23-25*4	GT27 GT25	
MELSEC-QnA	AJ71QLP21 AJ71QLP21S A1SJ71QLP21 A1SJ71QLP21S	MELSECNET/10	Optical fiber cable*2	*3	GT15-J71LP23-25*4	GT27 GT25	
MELSEC-A	AJ71LP21 A1SJ71LP21	MELSECNET/10	Optical fiber cable*2	*3	GT15-J71LP23-25*4	GT27 GT25	

*1 For the system configuration of the MELSECNET/H network module, refer to the following manual.
📖Q corresponding MELSECNET/H Network System Reference Manual (PLC to PLC network)
📖For QnA/Q4AR MELSECNET/10 Network System Reference Manual
📖For AnU MELSECNET/10 Network System Reference Manual (PLC to PLC network)

*2 For the optical fiber cable, refer to the following manual.
📖Q corresponding MELSECNET/H Network System Reference Manual (PLC to PLC network)
📖For QnA/Q4AR MELSECNET/10 Network System Reference Manual
📖For AnU MELSECNET/10 Network System Reference Manual (PLC to PLC network)

*3 The overall extension cable length and the length between stations vary depending on the cable type to be used and the total number of stations.
For details, refer to the following manual.
📖Q corresponding MELSECNET/H Network System Reference Manual (PLC to PLC network)
📖For QnA/Q4AR MELSECNET/10 Network System Reference Manual
📖For AnU MELSECNET/10 Network System Reference Manual (PLC to PLC network)

*4 Set the MELSECNET/10 mode in the communication settings. For the setting, refer to the following.
☞ Page 552 Setting communication interface (Controller Setting)

*5 GT25-W and GT2505-V do not support option devices.

Connection to the coaxial bus system

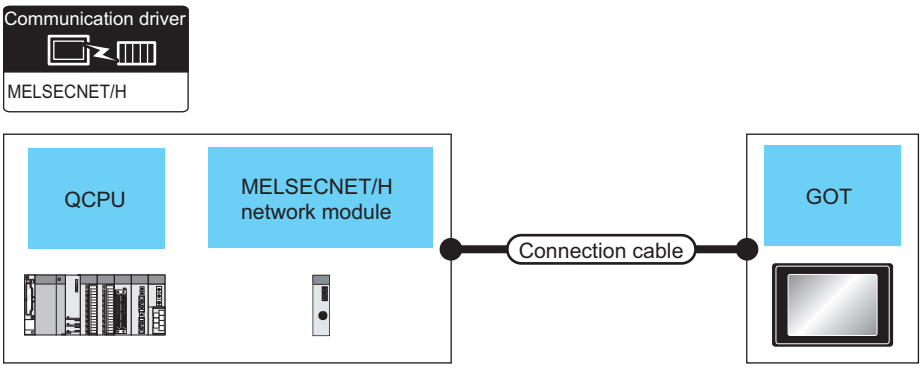

PLC			Connection cable		GOT		Number of connectable equipment
Model name	**MELSECNET/H network module*2**	**Communication type**	**Cable model**	**Max. distance**	**Option device*6**	**Model**	
MELSEC-Q	QJ71BR11	MELSECNET/H	Coaxial cable*3	*4	GT15-J71BR13	GT27 GT25	31 GOTs
	QJ71BR11	MELSECNET/10	Coaxial cable*3	*4	GT15-J71BR13*5	GT27 GT25	
C Controller module (Q Series)	QJ71BR11	MELSECNET/H	Coaxial cable*3	*4	GT15-J71BR13	GT27 GT25	
	QJ71BR11	MELSECNET/10	Coaxial cable*3	*4	GT15-J71BR13*5	GT27 GT25	
MELSEC-QS	QJ71BR11	MELSECNET/H	Coaxial cable*3	*4	GT15-J71BR13	GT27 GT25	
	QJ71BR11	MELSECNET/10	Coaxial cable*3	*4	GT15-J71BR13*5	GT27 GT25	
MELSEC-QnA	AJ71QBR11 A1SJ71QBR11	MELSECNET/10	Coaxial cable*3	*4	GT15-J71BR13*5	GT27 GT25	
MELSEC-A	AJ71BR11 A1SJ71BR11	MELSECNET/10	Coaxial cable*3	*4	GT15-J71BR13*5	GT27 GT25	

*1 Use a PLC CPU of function version B or a later version.

*2 For the system configuration of the MELSECNET/H network module, refer to the following manual.
📖Q corresponding MELSECNET/H Network System Reference Manual (PLC to PLC network)
📖For QnA/Q4AR MELSECNET/10 Network System Reference Manual
📖For AnU MELSECNET/10 Network System Reference Manual (PLC to PLC network)
Use a MELSECNET/H network module of function version B or a later version.

*3 For the coaxial cable, refer to the following manual.
📖Q corresponding MELSECNET/H Network System Reference Manual (PLC to PLC network)
📖For QnA/Q4AR MELSECNET/10 Network System Reference Manual
📖For AnU MELSECNET/10 Network System Reference Manual (PLC to PLC network)
For the coaxial cable connector connection method, refer to the following.
☞ Page 66 Coaxial cable connector connection method

*4 The overall extension cable length and the length between stations vary depending on the cable type to be used and the total number of stations.
For details, refer to the following manual.
📖Q corresponding MELSECNET/H Network System Reference Manual (PLC to PLC network)
📖For QnA/Q4AR MELSECNET/10 Network System Reference Manual
📖For AnU MELSECNET/10 Network System Reference Manual (PLC to PLC network)

*5 Set the MELSECNET/10 mode in the communication settings. For the setting, refer to the following.
☞ Page 552 Setting communication interface (Controller Setting)

*6 GT25-W and GT2505-V do not support option devices.

8.3 GOT Side Settings

Setting communication interface (Controller Setting)

Set the channel of the connected equipment.

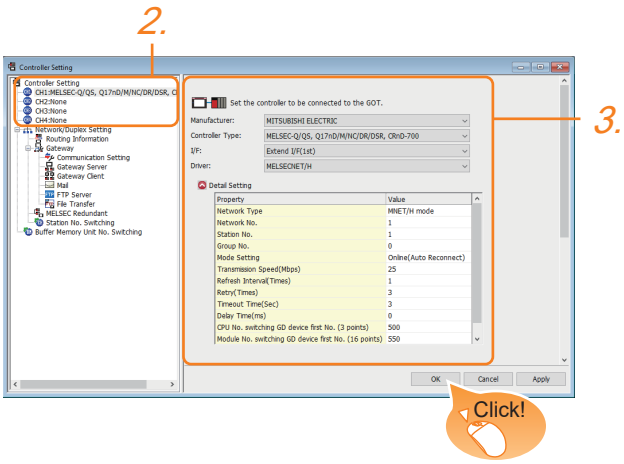

1. Select [Common] → [Controller Setting] from the menu.

2. In the [Controller Setting] window, select the channel No. to be used from the list menu.

3. Set the following items.

- [Manufacturer]: [MITSUBISHI ELECTRIC]
- [Controller Type]: Configure the setting according to the controller to be connected.
- [I/F]: Interface to be used
- [Driver]: [MELSECNET/H]
- [Detail Setting]: Configure the settings according to the usage environment.

☞ Page 553 Communication detail settings

4. When you have completed the settings, click the [OK] button.

Point

The settings of connecting equipment can be confirmed in [I/F Communication Setting].
For details, refer to the following:
☞ Page 54 I/F communication setting

Communication detail settings

Make the settings according to the usage environment.

Property	Value
Network Type	MNET/H mode
Network No.	1
Station No.	1
Group No.	0
Mode Setting	Online(Auto Reconnect)
Transmission Speed(Mbps)	25
Refresh Interval(Times)	1
Retry(Times)	3
Timeout Time(Sec)	3
Delay Time(ms)	0
CPU No. switching GD device first No. (3 points)	500
Module No. switching GD device first No. (16 points	550
Servo axis switching GD device first No. (16 points)	10

Item	Description	Range
Network Type	Set the network type. (Default: MNET/H mode)	• MNET/H mode • MNET/10 mode • MNET/H Extended mode*1
Network No.	Set the network No. (Default: 1)	1 to 239
Station No.	Set the station No. of the GOT. (Default: 1)	1 to 64
Mode Setting	Set the operation mode of the GOT. (Default: Online (auto. reconnection))	• Online (auto. reconnection) • Offline • Test between slave station*2 • Self-loopback test*2 • Internal self-loopback test*2 • H/W test*2
Transmission Speed	Set the communication transmission speed. (Default: 25Mbps) When specifying [MNET/10 mode] as The network type, only 10mbps can be set applicable.	10Mbps/25Mbps
Refresh Interval	Set the number of refreshes to secure the send/receive data in station units during communication. (Default: 1time) Valid when [Secured data send/Secured data receive] Is marked by the control station side network parameters of the melsecnet/h network system.	1 to 1000times
Retry	Set the number of retries to be performed when a communication timeout occurs. When no response is received after retries, a communication times out. (Default: 3times)	0 to 5times
Timeout Time	Set the time period for a communication to time out. (Default: 3sec)	1 to 90sec
Delay Time	Set the delay time for reducing the load of the network/destination PLC. (Default: 0ms)	0 to 300ms
CPU No. switching GD device first No. (3 points)	Set the start device number of the GD devices for CPU No. switching. (Default: 500) For the details, refer to the following. ☞ Page 555 Start device number of the GD devices for CPU number switching	0 to 65520
Module No. switching GD device first No. (16 points)	Set the start device number of the GD devices for module No. switching. (Default: 550) For the details, refer to the following. ☞ Page 556 Start device number of the GD devices for module number switching	0 to 65520
Servo axis switching GD device first No. (16 points)	Set the servo axis switching GD device first No. (Default: 10) For the details, refer to the following. ☞ Page 557 Servo axis switching GD device first No.	0 to 65520

*1 To monitor the redundant QCPU system, use function version D or later of QCPU, whose first 5 digits of the serial number are 07102 or later.
Use version 8.29F or later of GX Developer.

*2 For details, refer to the following manual.
Q corresponding MELSECNET/H Network System Reference Manual (PLC to PLC network)
For QnA/Q4AR MELSECNET/10 Network System Reference Manual
For AnU MELSECNET/10 Network System Reference Manual (PLC to PLC network)

Point

• When connecting to the MELSECNET/10 network

When connecting to the MELSECNET/10 network using the MELSECNET/H communication module, set [MNET/10 mode] in [Network Type].

• Communication interface setting by Utility

The communication interface setting can be changed on the Utility's [Communication Settings] after writing [Controller Setting] of project data.

For details on the RS-422 conversion unit and the GOT utility, refer to the following manual:

GOT2000 Series User's Manual (Utility)

• Precedence in communication settings

When settings are made by GT Designer3 or the Utility, the latest setting is effective.

Start device number of the GD devices for CPU number switching

■Specifying a CPU number with a device

[CPU No.] can be specified with the GOT internal registers (GD devices) by specifying a value (100 to 102) to [CPU No.] in the device setting dialog in GT Designer3.

Set the start device number of the GD devices to be used in [CPU No. switching GD device first No. (3 points)].

Specify [CPU No.] with the three consecutive GD devices, starting the set device number.

When [500] is set to [CPU No. switching GD device first No. (3 points)], GD500 to GD502 are used to specify [CPU No.] as shown in the following table.

CPU No.	GD device	Setting range
100	GD500	1 to 4 Setting an invalid value causes a communication timeout error. Specifying a nonexistent CPU No. or a CPU No. not supporting a multiple CPU system with a device causes a controller error.
101	GD501	
102	GD502	

■Specifying a CPU number with a device on the initially-displayed screen

Set [CPU No. switching GD device first No. (3 points)] so that the values of the GD devices are retained and monitored upon the GOT startup.

■Specifying a CPU number with a device in a multi-channel connection

If the setting range of [CPU No. switching GD device first No. (3 points)] set in each channel overlaps, the monitoring target CPU No. set to each channel is switched simultaneously.

Set [CPU No. switching GD device first No. (3 points)] in each channel so that the setting range does not overlap.

■Specifying a CPU number and a station number with devices in a multi-channel connection

When GD10 to GD25 are used to specify the station No. of an inverter or non-Mitsubishi temperature controller connected, setting [10] to [CPU No. switching GD device first No. (3 points)] in a different channel switches the monitoring target CPU No. and station No. of an inverter or non-Mitsubishi temperature controller set to each channel simultaneously.

Set [CPU No. switching GD device first No. (3 points)] so that the setting range does not overlap the station No. of an inverter or non-Mitsubishi temperature controller.

Start device number of the GD devices for module number switching

■Specifying a module number with a device

In a connection via a simple motion module, [Unit No.] can be specified with the GOT internal registers (GD devices) by specifying a value (100 to 10F) to [Unit No.] in the device setting dialog in GT Designer3.
Set the start device number of the GD devices to be used in [Module No. switching GD device first No. (16 points)].
Specify [Unit No.] with the 16 consecutive GD devices, starting the set device number.
When [550] is set to [Module No. switching GD device first No. (16 points)], GD550 to GD565 are used to specify [Unit No.] as shown in the following table.

Unit No.	GD device	Setting range
100	GD550	The setting range depends on [Unit Type]. • When [MELSEC iQ-R, RnMT/NC/RT, CR800-D], [MELSEC iQ-R, RnMT/RT, CR800-D], [MELSEC-Q/QS, Q17nD/M/NC/DR/DSR, CRnD-700], [MELSEC-Q, Q17nD/M/DR/DSR, CRnD-700], [MELSEC-L] or [MELIPC] is selected for [Unit Type] 00 to FF • When [MELSEC iQ-F] is selected for [Unit Type] 01 to 10 Setting an invalid value causes a device range error.
101	GD551	
102	GD552	
103	GD553	
104	GD554	
105	GD555	
106	GD556	
107	GD557	
108	GD558	
109	GD559	
10A	GD560	
10B	GD561	
10C	GD562	
10D	GD563	
10E	GD564	
10F	GD565	

■Specifying a module number with a device on the initially-displayed screen

Set [Module No. switching GD device first No. (16 points)] so that the values of the GD devices are retained and monitored upon the GOT startup.

■Specifying a module number with a device in a multi-channel connection

If the setting range of [Module No. switching GD device first No. (16 points)] set in each channel overlaps, the module No. of the simple motion module via the servo amplifier device of each channel is switched simultaneously.
Set [Module No. switching GD device first No. (16 points)] for each channel so that the setting range does not overlap.

■Specifying a station number and a module number with devices in a multi-channel connection

When GD10 to GD25 are used to specify the station No. of an inverter or non-Mitsubishi temperature controller connected, setting [10] to [Module No. switching GD device first No. (16 points)] switches the module No. of the simple motion module via the servo amplifier device and the station No. of an inverter or non-Mitsubishi temperature controller set to each channel simultaneously.
Set [Module No. switching GD device first No. (16 points)] so that the setting range does not overlap the station No. of an inverter or non-Mitsubishi temperature controller.

Servo axis switching GD device first No.

■Indirect specification of the servo axis No.

In a connection via a Motion CPU or Simple Motion module, a servo axis No. can be indirectly specified with GOT internal registers (GD devices) by specifying a value (100 to 115) to the axis No. of the servo amplifier device.
Set the start device number of the GD devices to be used in [Servo axis switching GD device first No. (16 points)].
Specify a servo axis number with 16 consecutive GD devices, starting the set device number.
When [10] is set to [Servo axis switching GD device first No. (16 points)], GD10 to GD25 are used to specify a servo axis number as shown in the following table.

Servo axis No.	GD device	Setting range
100	GD10	1 to 64 Setting an invalid value causes a device range error.
101	GD11	
102	GD12	
103	GD13	
104	GD14	
105	GD15	
106	GD16	
107	GD17	
108	GD18	
109	GD19	
110	GD20	
111	GD21	
112	GD22	
113	GD23	
114	GD24	
115	GD25	

■Specifying a servo axis number with a device on the initially-displayed screen

Set [Servo axis switching GD device first No. (16 points)] so that the values of the GD devices are retained and monitored upon the GOT startup.

■Specifying a servo axis number with a device in a multi-channel connection

If the setting rage of [Servo axis switching GD device first No. (16 points)] set in each channel overlaps, the axis No. of the servo amplifier of each channel is switched simultaneously.
Set [Servo axis switching GD device first No. (16 points)] for each channel so that the setting range does not overlap.

■Specifying a station number and a servo axis number with devices in a multi-channel connection

When GD10 to GD25 are used to specify the station No. of an inverter or non-Mitsubishi temperature controller connected, setting [10] to [Servo axis switching GD device first No. (16 points)] switches the axis No. of the servo amplifier and the station No. of an inverter or non-Mitsubishi temperature controller set to each channel simultaneously.
Set [Servo axis switching GD device first No. (16 points)] so that the setting range does not overlap the station No. of an inverter or non-Mitsubishi temperature controller.

Routing parameter setting

Up to 64 [Transfer Network No.]s can be set.
However, the same transfer network number cannot be set twice or more (multiple times).
Therefore, the one that can access to other station from the request source host GOT is 64 kinds of [Transfer Network No.]s.

Point

Routing parameter setting
When communicating within the host network, routing parameter setting is unnecessary.
For details of routing parameters, refer to the following manual.
📖Q corresponding MELSECNET/H Network System Reference Manual (PLC to PLC network)

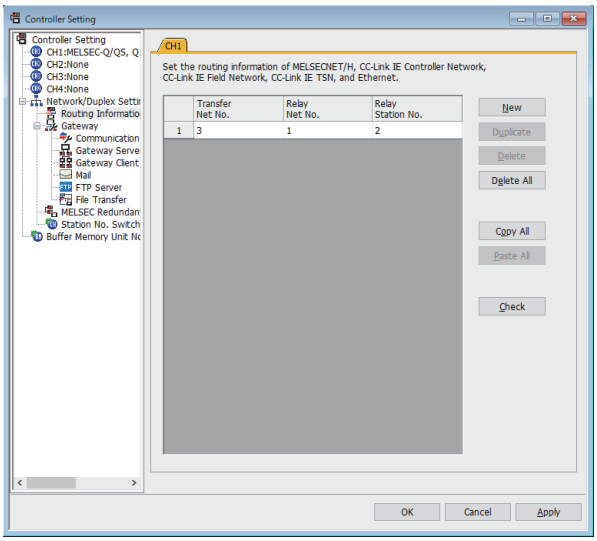

Item	Range
Transfer Network No.	1 to 239
Relay Network No.	1 to 239
Relay Station No.	0 to 64

Point

• Routing parameter setting of relay station
Routing parameter setting is also necessary for the relay station.
For the setting, refer to the following.
☞ Page 559 PLC side setting when connecting to MELSECNET/H
• Parameter reflection function of MELSOFT Navigator
The color of the cells for the items which are reflected to GT Designer3 from MELSOFT Navigator changes to green. Set items, which are displayed in green cells, from the MELSOFT Navigator.
When the settings of Transfer network No., Relay network No. or Relay station No. are reflected to the parameter from the MELSOFT Navigator, those settings are added. Items set in advance are not deleted.However, if the target network No. overlaps, the item set in advance is overwritten.
The routing information is used manually by the user when the data is created. Therefore, after changing the network configuration by MELSOFT Navigator, create a routing information again. For details of the creation of the routing information, refer to the MELSOFT Navigator help.

8.4 PLC side setting when connecting to MELSECNET/H

This section describes the settings of the GOT and MELSECNET/H network module in the case of system configuration shown as 9.4.1.
When connecting the MELSECNET/H network module to the MELSECNET/H network system, specify the MELSECNET/H Mode or the MELSECNET/H Extended Mode as a network type.

Point

MELSECNET/H network module
For details of the MELSECNET/H network module, refer to the following manual.
Q corresponding MELSECNET/H Network System Reference Manual (PLC to PLC network)

System configuration

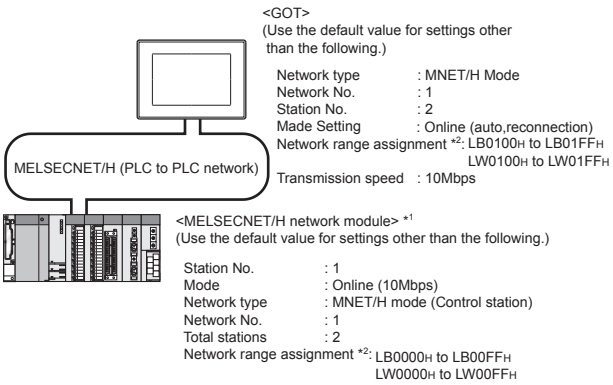

*1 The MELSECNET/H network module is mounted at slot 0 of the base unit.
The start I/O No. of the MELSECNET/H network module is set at "0".

*2 The network type must be set according to the number of assignment of send points for each station.
When the number of assignment is 2000 bytes or less:
MELSECNET/H mode
When the number of assignment is 2000 bytes or more:
MELSECNET/H Extended Mode

Point

When connecting to Q170MCPU or Q170MSCPU(-S1)
When connected to Q170MCPU or Q170MSCPU(-S1), the start I/O No. of the MELSECNET/H network module is set to "70".

Switch setting of MELSECNET/H network module

Set the station number setting switch and mode setting switch.

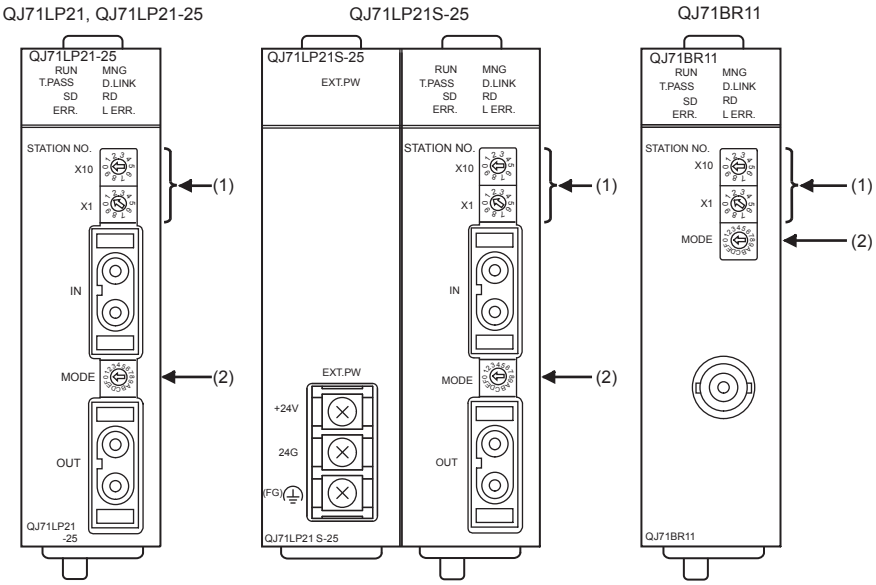

Station number setting switch

Station number setting switch	Description	Set value	Setting necessity at GOT connection
STATION NO. X10 X1	Station number setting(Station No.1)*1	1	○

○: Necessary △: As necessary ×: Not necessary

*1 Do not set the same station No. as that of the GOT.

Mode setting switch

Mode setting switch	Description	Set value	Setting necessity at GOT connection
MODE	Mode setting (Online: 10Mbps)*1	0	○

○: Necessary △: As necessary ×: Not necessary

*1 Set the same mode setting and transmission speed as those of the GOT.

Point

When the switch setting has been changed

Turn the PLC CPU OFF then ON again, or reset the PLC CPU.

Parameter setting

Connecting to MELSEC-Q or QS series

■[Network parameter] of GX Developer

- Network parameter

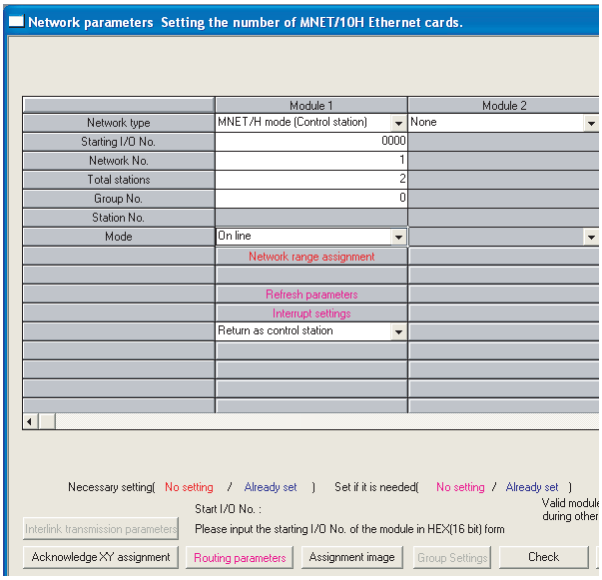

Item	Set value	Setting necessity at GOT connection
Network type	MNET/H mode (Control station) (fixed)	○
Starting I/O No.*1	0000H	○
Network No.*2	1	○
Total stations	2	○
Group No.	0 (fixed)	○
Mode*3	Online	○
Network range assignment	☞ • Network range assignment	△
Refresh parameters	(Use default value)	△
Interrupt settings		×
Control station return setting		△
Redundant settings*4		△
Interlink transmission parameters		×
Routing parameters	☞ • Routing parameter setting	△

○: Necessary △: As necessary ×: Not necessary

*1 When using Q170MCPU or Q170MSCPU(-S1), set it according to the system configuration.
*2 Specify the same network No. as that of the GOT.
*3 Set the same mode setting as that of the GOT.
*4 Set it when the MELSECNET/H network module is used in the redundant QnPRHCPU system.

• Network range assignment

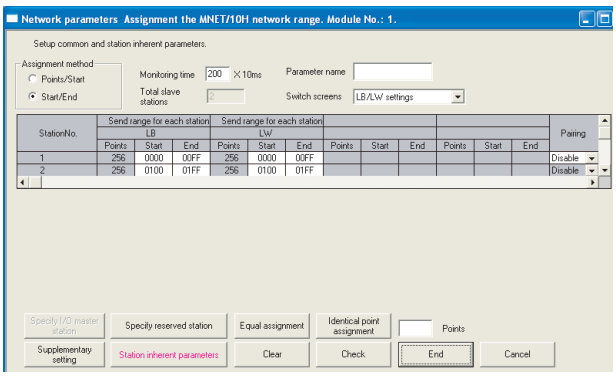

Item				Set value	Setting necessity at GOT connection
Monitoring time				200	△
LB/LW setting*1	Send range for station (LB)	Station No.1	Start	0000H	△
			End	00FFH	△
		Station No.2	Start	0100H	△
			End	01FFH	△
	Send range for station (LW)	Station No.1	Start	0000H	△
			End	00FFH	△
		Station No.2	Start	0100H	△
			End	01FFH	△
	Pairing setting*2			Disable	△
LX/LY setting*1				No setting	△
Specify I/O master station*1				No setting	△
Specify reserved station				No setting	△
Supplementary setting				(Use default value)	△
Station inherent parameters					△

○: Necessary △: As necessary ×: Not necessary

*1 Be sure to set the setting to perform the cyclic transmission.

*2 Set it when the MELSECNET/H network module is used in the redundant QnPRHCPU system.

Point

When changing the network parameter

After writing the network parameter to the PLC CPU, operate the PLC CPU ether turning OFF and then ON or resetting.

• Routing parameter setting

Up to 64 [Transfer Network No.]s can be set.

However, the same transfer network number cannot be set twice or more (multiple times).

Therefore, the one that can access to other station from the request source host GOT is 64 kinds of [Transfer Network No.]s.

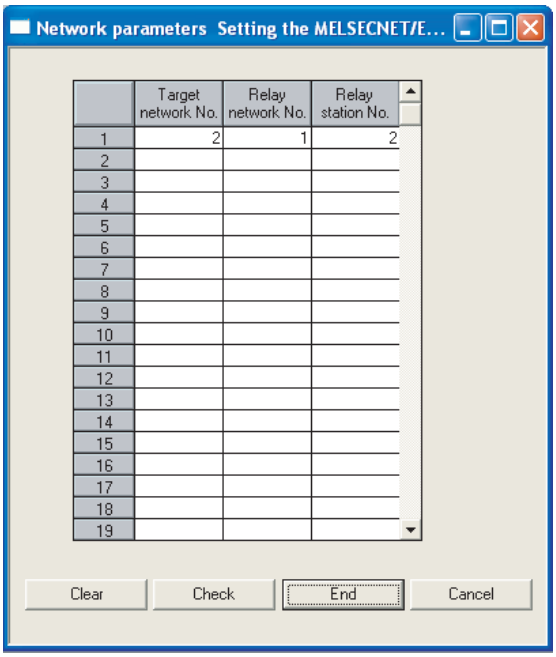

Item	Range
Target network No.	1 to 239
Relay network No.	1 to 239
Relay station No.	0 to 64

Point

Routing parameter setting of request source

Routing parameter setting is also necessary for the request source GOT.

For the setting, refer to the following.

☞ Page 558 Routing parameter setting

Connecting to C Controller module (Q Series)

Use SW3PVC-CCPU-E Ver.3.05F or later for the MELSECNET/H utility.

■Connection settings

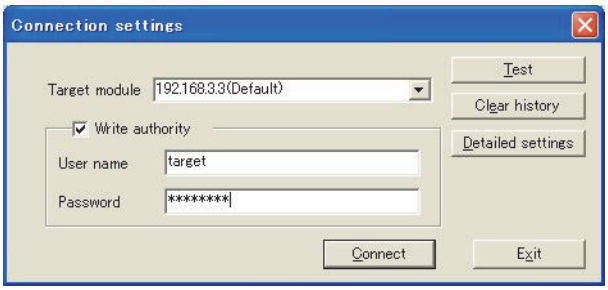

Item	Set value	Setting necessity at GOT connection
Target module*1	192.168.3.3 (Default)	○
Write authority	Mark the checkbox	○
User name*2	target	○
Password*2	password	○
Detailed settings	-	△

○: Necessary △: As necessary ×: Not necessary

*1 If the IP address of the C Controller module (Q Series) has been changed, input the changed IP address or host name.

*2 If the account of the C Controller module (Q Series) has been changed, input the changed user name and password.

■MELSECNET/H Utility's [Parameter Settings]

- Parameter settings

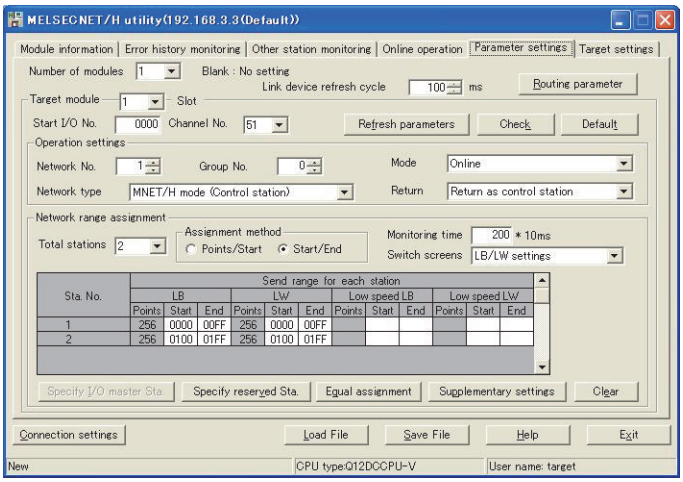

Item					Set value	Setting necessity at GOT connection
Number of modules					1	○
Link device refresh cycle					(Use default value)	△
Routing parameter					☞ • Routing parameter setting	△
Target module					1	○
Start I/O No.					0000H	○
Channel No.					(Use default value)	○
Operation settings	Network type				MNET/H mode (Control station)	○
	Network No.*1				1	○
	Group No.				0	○
	Mode*2				Online	○
	Return				(Use default value)	△
Refresh parameters					(Use default value)	△
Network range assignment	Total stations				2	○
	Assignment method				Start/End	○
	LB/LW settings*3	Send range for each station LB	Sta. No.1	Start	0000H	△
				End	00FFH	△
			Sta. No.2	Start	0100H	△
				End	01FFH	△
		Send range for each station LW	Sta. No.1	Start	0000H	△
				End	00FFH	△
			Sta. No.2	Start	0100H	△
				End	01FFH	△
	(LX/LY) settings*3				No setting	△
	Monitoring time				(Use default value)	△
	Specify I/O master Sta.*3				No setting	△
	Specify reserved Sta.				No setting	△
	Supplementary settings				(Use default value)	△

○: Necessary △: As necessary ×: Not necessary

*1 Specify the same network No. as that of the GOT.
*2 Set the same mode setting as that of the GOT.
*3 Be sure to set the setting to perform the cyclic transmission.

Point

When changing the network parameter

After writing the network parameter to the C Controller module (Q Series), either turn the C Controller module (Q Series) OFF and then ON or reset it.

- Routing parameter setting

Up to 64 [Transfer Network No.]s can be set.

However, the same transfer network number cannot be set twice or more (multiple times).

Therefore, the one that can access to other station from the request source host GOT is 64 kinds of [Transfer Network No.]s.

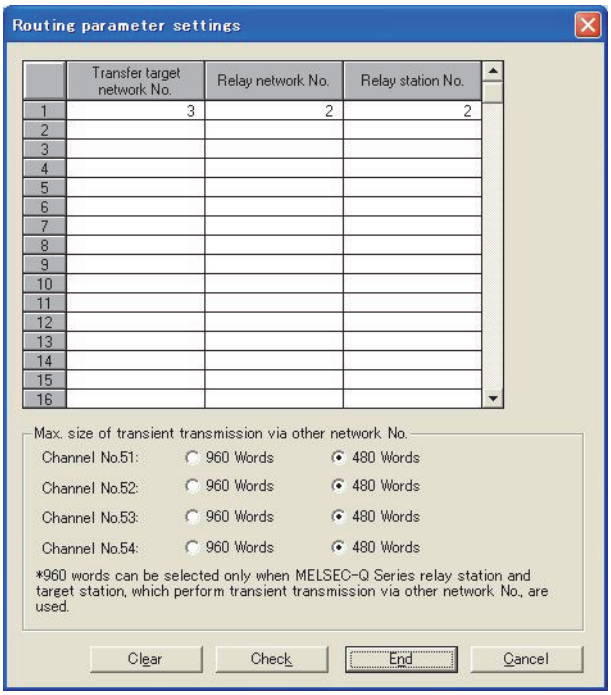

Item	Range
Transfer target network No.	1 to 239
Relay network No.	1 to 239
Relay station No.	0 to 120

Point

Routing parameter setting of request source

Routing parameter setting is also necessary for the request source GOT.

For the setting, refer to the following.

☞ Page 558 Routing parameter setting

[Controller Setting] of GT Designer3

Item	Set value
Network Type	MNET/H mode
Network No.	1: Network No.1
Station No.	2: Station No.2
Mode Setting	Online (auto. reconnection)
Retry count	3times (Use default value)
Timeout Time	3sec (Use default value)
Delay Time	0sec (Use default value)
Refresh Interval	1time (Use default value)
Monitor Speed	10Mbs

Point

[Controller Setting] of GT Designer3

For [Controller Setting], of GT Designer3, refer to the following.

☞ Page 552 Setting communication interface (Controller Setting)

8.5 PLC side setting when connecting to MELSECNET/10

Model name		Reference
MELSECNET/H network module	QJ71LP21, QJ71LP21-25, QJ71LP21S-25, QJ71BR11	☞ Page 568 Connection to MELSECNET/H network module
MELSECNET/10 network module (QnA Series)	AJ71QLP21, AJ71QLP21S, AJ71QBR11, A1SJ71QLP21, A1SJ71QLP21S, A1SJ71QBR11	☞ Page 577 Connection to MELSECNET/10 network module (QnA Series)
MELSECNET/10 network module (A Series)	AJ71LP21, AJ71BR11, A1SJ71LP21, A1SJ71BR1	☞ Page 585 Connection to MELSECNET/10 network module (A Series)

Connection to MELSECNET/H network module

This section describes the settings of the GOT and MELSECNET/H network module in the following case of system configuration.

When connecting the MELSECNET/H network module to the MELSECNET/10 network system, specify the MELSECNET/10 Mode as a network type.

Point

MELSECNET/H network module

For details of the MELSECNET/H network module, refer to the following manual.

📖Q corresponding MELSECNET/H Network System Reference Manual (PLC to PLC network)

System configuration

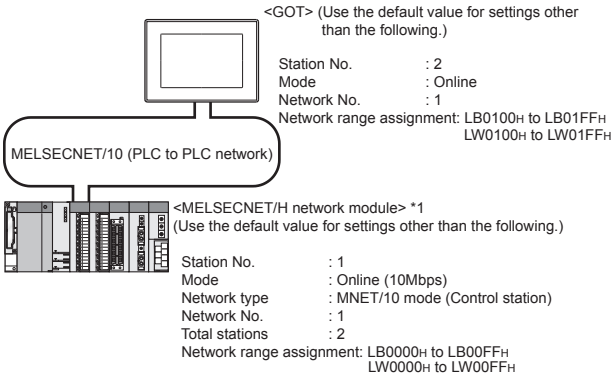

*1 The MELSECNET/H network module is mounted at slot 0 of the base unit.
The start I/O No. of the MELSECNET/H network module is set at "0".

Point

When connecting to Q170MCPU or Q170MSCPU(-S1)

When connected to Q170MCPU or Q170MSCPU(-S1), the start I/O No. of the MELSECNET/H network module is set to "70".

Switch setting of MELSECNET/H network module

Set the station number setting switch and mode setting switch.

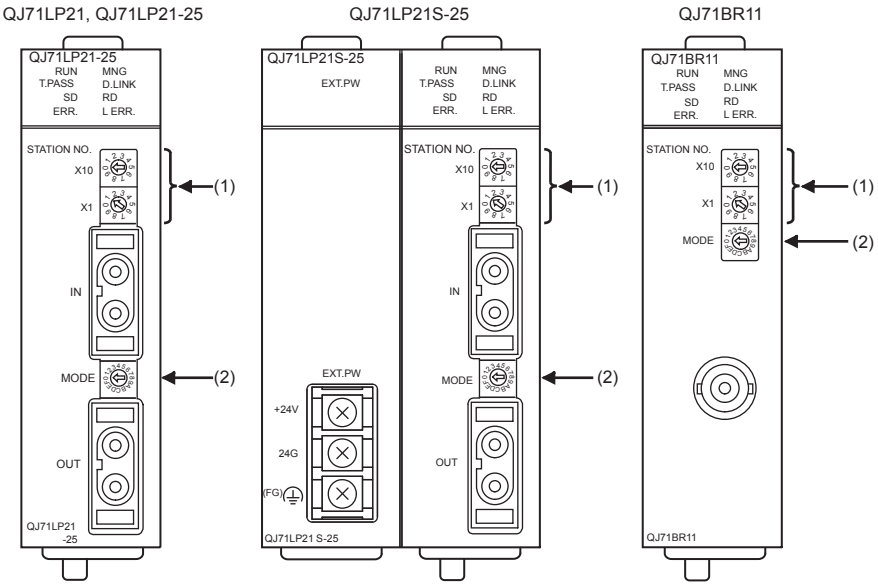

■Station number setting switch

Station number setting switch	Description	Set value	Setting necessity at GOT connection
STATION NO. X10 X1	Station number setting (Station No.1)*1	1	○

○: Necessary △: As necessary ×: Not necessary

*1 Do not set the same station No. as that of the GOT.

■Mode setting switch

Mode setting switch	Description	Set value	Setting necessity at GOT connection
MODE	Mode setting (Online: 10Mbps)	0 (fixed)	○

○: Necessary △: As necessary ×: Not necessary

Point

When the switch setting has been changed

Turn the PLC CPU OFF then ON again, or reset the PLC CPU.

Parameter setting (when connecting to MELSEC-Q or QS series)

■[Network parameter] of GX Developer

- Network parameter

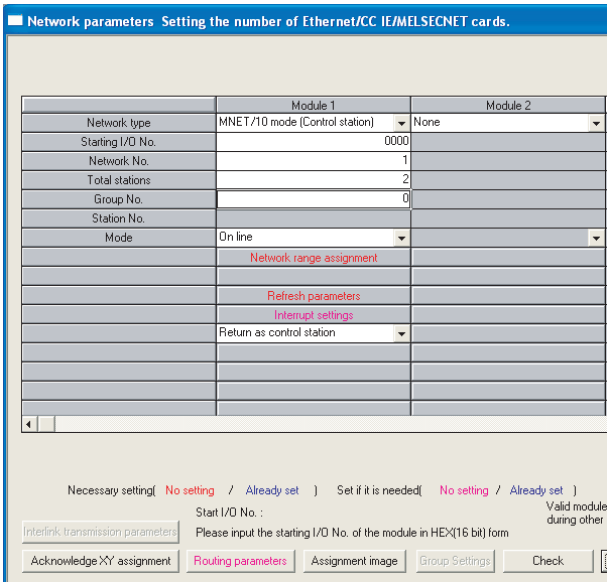

Item	Set value	Setting necessity at GOT connection
Network type	MNET/10 mode (Control station) (fixed)	○
Starting I/O No.*1	0000H	○
Network No.*2	1	○
Total stations	2	○
Group No.	0 (fixed)	○
Mode	Online (fixed)	○
Network range assignment	☞ • Network range assignment	△
Refresh parameters	(Use default value)	△
Interrupt settings		×
Control station return setting		△
Redundant settings*3		△
Interlink transmission parameters		×
Routing parameters	☞ • Routing parameter setting	△

○: Necessary △: As necessary ×: Not necessary

*1 When using Q170MCPU, set it according to the system configuration.
*2 Specify the same network No. as that of the GOT.
*3 Set it when the MELSECNET/H network module is used in the redundant QnPRHCPU system.

• Network range assignment

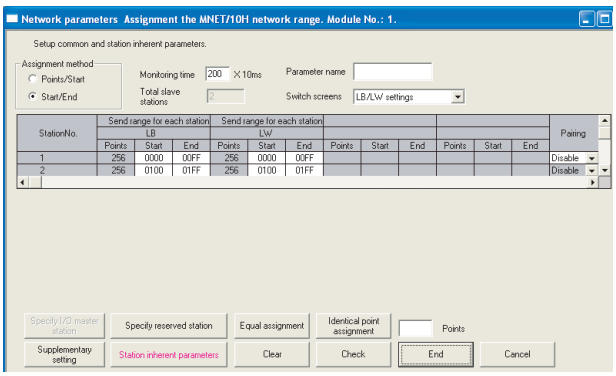

Item				Set value	Setting necessity at GOT connection
Monitoring time				200	△
LB/LW setting*1	Send range for station (LB)	Station No.1	Start	0000H	△
			End	00FFH	△
		Station No.2	Start	0100H	△
			End	01FFH	△
	Send range for station (LW)	Station No.1	Start	0000H	△
			End	00FFH	△
		Station No.2	Start	0100H	△
			End	01FFH	△
	Pairing setting*2			Disable	△
LX/LY setting*1				No setting	△
Specify I/O master station*1				No setting	△
Specify reserved station				No setting	△
Supplementary setting				(Use default value)	△
Station inherent parameters					△

○: Necessary △: As necessary ×: Not necessary

*1 Be sure to set it to perform the cyclic transmission.

*2 Set it when the MELSECNET/H network module is used in the redundant QnPRHCPU system.

Point

When changing the network parameter

After writing the network parameter to the PLC CPU, operate the PLC CPU ether turning OFF and then ON or resetting.

• Routing parameter setting

Up to 64 [Transfer Network No.]s can be set.

However, the same transfer network number cannot be set twice or more (multiple times).

Therefore, the one that can access to other station from the request source host GOT is 64 kinds of [Transfer Network No.]s.

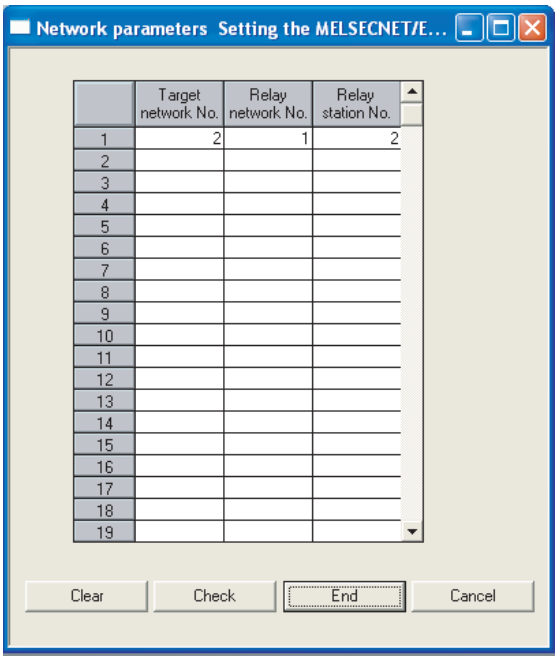

Item	Range
Target network No.	1 to 239
Relay network No.	1 to 239
Relay station No.	0 to 64

Point

Routing parameter setting of request source

Routing parameter setting is also necessary for the request source GOT.

For the setting, refer to the following.

☞ Page 558 Routing parameter setting

Parameter setting (when connecting to C Controller module (Q Series))

Use SW3PVC-CCPU-E Ver.3.05F or later for the MELSECNET/H utility.

■Connecting to C Controller module (Q Series)

- Connection settings

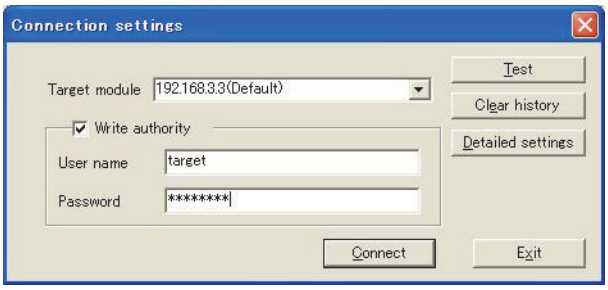

Item	Set value	Setting necessity at GOT connection
Target module*1	192.168.3.3 (Default)	○
Write authority	Mark the checkbox	○
User name*2	target	○
Password*2	password	○
Detailed settings	-	△

○: Necessary △: As necessary ×: Not necessary

*1 If the IP address of the C Controller module (Q Series) has been changed, input the changed IP address or host name.

*2 If the account of the C Controller module (Q Series) has been changed, input the changed user name and password.

8

■MELSECNET/H Utility's [Parameter Settings]

- Parameter settings

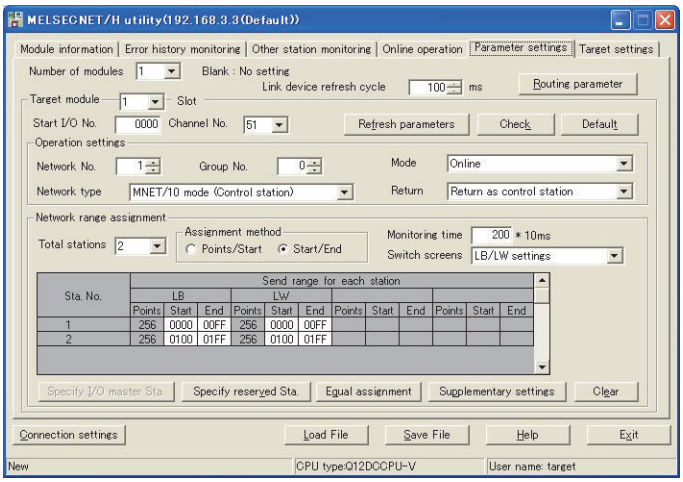

Item					Set value	Setting necessity at GOT connection
Number of modules					1	○
Link device refresh cycle					(Use default value)	△
Routing parameter					☞ • Routing parameter setting	△
Target module					1	○
Start I/O No.					0000H	○
Channel No.					(Use default value)	○
Operation settings	Network type				MNET/10 mode (Control station)	○
	Network No.*1				1	○
	Group No.				0	○
	Mode				Online	○
	Return				(Use default value)	△
Refresh parameters					(Use default value)	△
Network range assignment	Total stations				2	○
	Assignment method				Start/End	○
	LB/LW settings*2	Send range for each station LB	Sta. No.1	Start	0000H	△
				End	00FFH	△
			Sta. No.2	Start	0100H	△
				End	01FFH	△
		Send range for each station LW	Sta. No.1	Start	0000H	△
				End	00FFH	△
			Sta. No.2	Start	0100H	△
				End	01FFH	△
	(LX/LY) settings*2				No setting	△
	Monitoring time				(Use default value)	△
	Specify I/O master Sta.*2				No setting	△
	Specify reserved Sta.				No setting	△
	Supplementary settings				(Use default value)	△

○: Necessary △: As necessary ×: Not necessary

*1 Specify the same network No. as that of the GOT.

*2 Be sure to set the setting to perform the cyclic transmission.

Point

When changing the network parameter

After writing the network parameter to the C Controller module (Q Series), either turn the C Controller module (Q Series) OFF and then ON or reset it.

• Routing parameter setting

Up to 64 [Transfer Network No.]s can be set.

However, the same transfer network number cannot be set twice or more (multiple times).

Therefore, the one that can access to other station from the request source host GOT is 64 kinds of [Transfer Network No.]s.

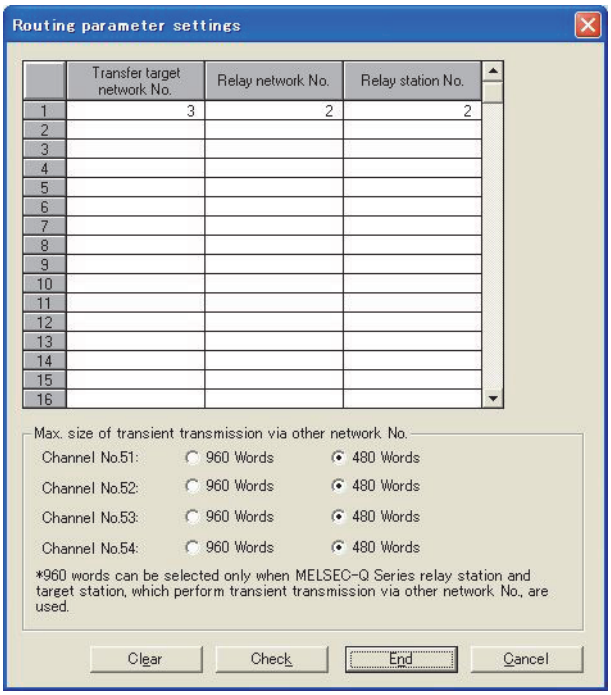

Item	Range
Transfer target network No.	1 to 239
Relay network No.	1 to 239
Relay station No.	0 to 120

Point

Routing parameter setting of request source

Routing parameter setting is also necessary for the request source GOT.

For the setting, refer to the following.

☞ Page 558 Routing parameter setting

[Controller Setting] of GT Designer3

Item	Set value (Use default)
Retry	3times
Timeout Time	3sec

Point

[Controller Setting] of GT Designer3

For the setting method of [Controller Setting] of GT Designer3, refer to the following.

☞ Page 552 Setting communication interface (Controller Setting)

Setting of the MELSECNET/10 communication unit

Item	Set value
Network number setting switch	1: Network No.1
Group number setting switch	0: No group setting (fixed)
Station number setting switch	2: Station No.2
Mode setting switch	0: Online (fixed)

Point

Setting of the MELSECNET/10 communication unit

For the setting method of the MELSECNET/10 communication unit, refer to the following.

☞ Page 552 Setting communication interface (Controller Setting)

Connection to MELSECNET/10 network module (QnA Series)

This section describes the settings of the GOT and MELSECNET/10 network module (QnA series) in the following case of system configuration.
In this section, the network parameter (common parameter) of GX Developer is taken as an example to provide explanations.

Point

MELSECNET/10 network module (QnA Series)
For details of the MELSECNET/10 network module (QnA Series), refer to the following manual.
For QnA/Q4AR MELSECNET/10 Network System Reference Manual

System configuration

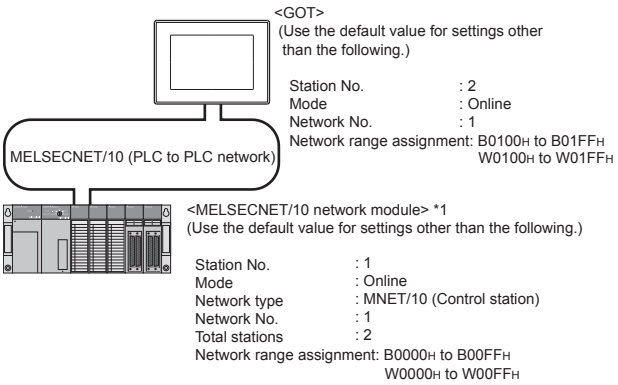

*1 The MELSECNET/10 network module is mounted at slot 0 of the base unit.
The start I/O No. of the MELSECNET/10 network module is set at "0".

Switch setting of MELSECNET/10 network module

Set for each setting switch.

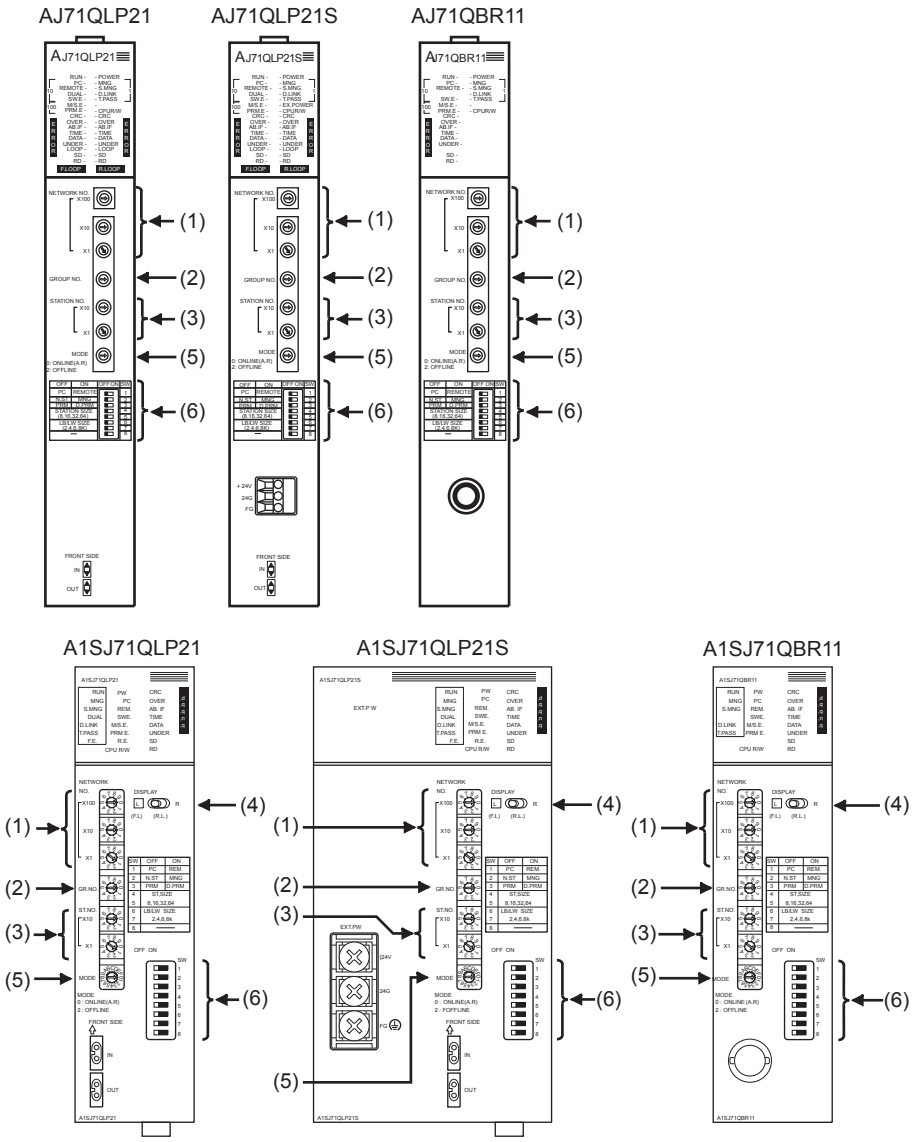

■Network number setting switch

Network number setting switch	Description	Set value	Setting necessity at GOT connection
NETWORK NO. X100 / X10 / X1	Network No. setting (Network No.1)*1	1	○

○: Necessary △: As necessary ×: Not necessary

*1 Specify the same network No. as that of the GOT.

■Group number setting switch

Group number setting switch	Description	Set value	Setting necessity at GOT connection
GROUP.NO. 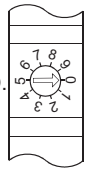	Group No. setting (No group setting)	0 (fixed)	○

○: Necessary △: As necessary ×: Not necessary

■Station number setting switch

Station number setting switch	Description	Set value	Setting necessity at GOT connection
STATION.NO. X10 X1 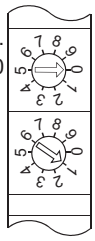	Station number setting (Station No.1)*1	1	○

○: Necessary △: As necessary ×: Not necessary

*1 Do not set the same station No. as that of the GOT.

■LED indication select switch

LED indication select switch	Description	Set value	Setting necessity at GOT connection
DISPLAY L R (F.L) (R.L.)	LED indication select	L (F.L.)	△

○: Necessary △: As necessary ×: Not necessary

■Mode setting switch

Mode setting switch	Description	Set value	Setting necessity at GOT connection
MODE 0 : ONLINE(A.R) 2 : OFFLINE 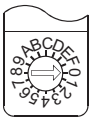	Mode setting (Online)	0 (fixed)	○

○: Necessary △: As necessary ×: Not necessary

■Condition setting switches

Condition setting switches	Setting switch	Description	Set value	Setting necessity at GOT connection
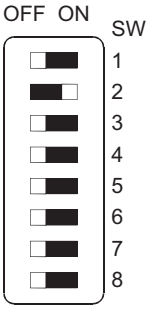	SW1	Network type (PLC to PLC net-work (PC))	OFF (fixed)	○
	SW2	Station type (Control station (MNG))	ON (fixed)	○
	SW3	Parameter for using*1 (common parameter (PRM))	OFF (fixed)	○
	SW4	No. of stations*1	OFF (fixed)	×
	SW5			
	SW6	B/W Total BW points*1	OFF (fixed)	×
	SW7			
	SW8	Not used	OFF (fixed)	×

○: Necessary △: As necessary ×: Not necessary

*1 The MELSECNET/10 network module can be communicated by default parameters.
For details, refer to the following manual.
☞ For QnA/Q4AR MELSECNET/10 Network System Reference Manual

Point

When the switch setting (other than the LED indication select switch) is changed
Turn the PLC CPU OFF then ON again, or reset the PLC CPU.

[Network parameter] of GX Developer

■Network parameter

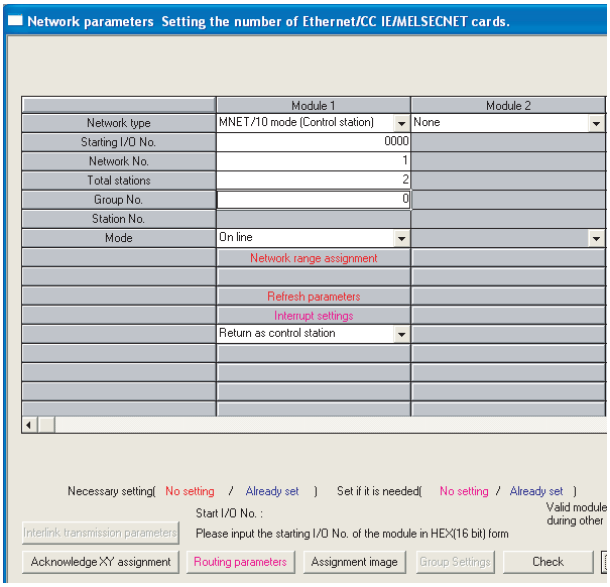

Item	Set value	Setting necessity at GOT connection
Network type	MNET/10 (Control station) (fixed)	○
Start I/O No.	0000H	○
Network No.*1	1	○
Total stations	2	○
Network range assignment	☞ Page 582 Network range assignment	△
Refresh parameters	(Use default value)	△
Interlink transmission parameters		×
Routing parameters	☞ Page 583 Routing parameter setting	△

○: Necessary △: As necessary ×: Not necessary

*1 Specify the same network No. as that of the network number setting switch of the MELSECNET/10 network module.

■Network range assignment

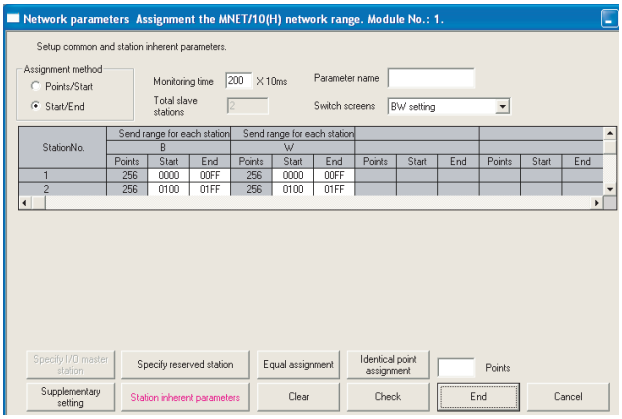

Item				Set value	Setting necessity at GOT connection
Monitoring time				200	△
BW setting*1	Send range for each station (LB)	Station No.1	Start	0000H	△
			End	00FFH	△
		Station No.2	Start	0100H	△
			End	01FFH	△
	Send range for each station (LW)	Station No.1	Start	0000H	△
			End	00FFH	△
		Station No.2	Start	0100H	△
			End	01FFH	△
XY setting*1				No setting	△
Specify I/O master station*1				No setting	△
Specify reserved station				No setting	△
Supplementary setting				(Use default value)	△
Station inherent parameters					△

○: Necessary △: As necessary ×: Not necessary

*1 Be sure to set it to perform the cyclic transmission.

Point

When changing the network parameter

After writing the network parameter to the PLC CPU, operate the PLC CPU ether turning OFF and then ON or resetting.

■Routing parameter setting

Up to 64 [Transfer Network No.]s can be set.

However, the same transfer network number cannot be set twice or more (multiple times).

Therefore, the one that can access to other station from the request source host GOT is 64 kinds of [Transfer Network No.]s.

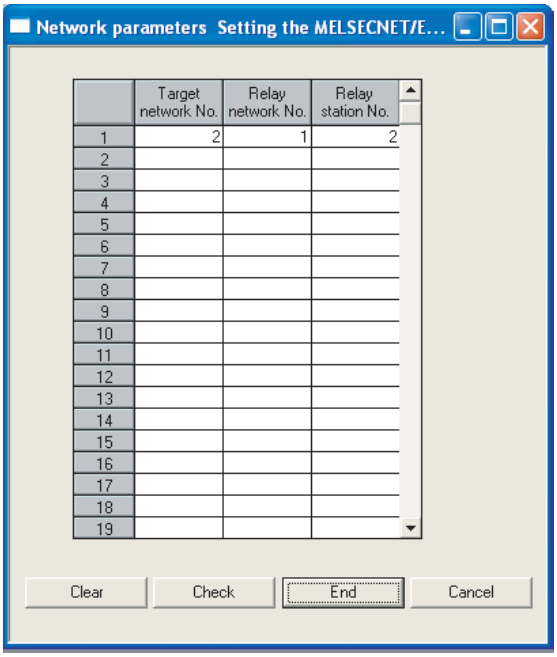

Item	Range
Target network No.	1 to 239
Relay network No.	1 to 239
Relay station No.	0 to 64

Point

Routing parameter setting of request source

Routing parameter setting is also necessary for the request source GOT.

For the setting, refer to the following.

☞ Page 558 Routing parameter setting

[Controller Setting] of GT Designer3

Item	Set value (Use default)
Retry	3times
Timeout Time	3sec

Point

[Controller Setting] of GT Designer3

For the setting method of [Controller Setting] of GT Designer3, refer to the following.

☞ Page 552 Setting communication interface (Controller Setting)

Setting of the MELSECNET/10 communication unit

Item	Set value
Network number setting switch	1: Network No.1
Group number setting switch	0: No group setting (fixed)
Station number setting switch	2: Station No.2
Mode setting switch	0: Online (fixed)

Point

Setting of the MELSECNET/10 communication unit

For the setting method of the MELSECNET/10 communication unit, refer to the following.

☞ Page 552 Setting communication interface (Controller Setting)

Connection to MELSECNET/10 network module (A Series)

This section describes the settings of the GOT and MELSECNET/10 network module (A Series) in the following case of system configuration.

In this section, the network parameter (common parameter) of GX Developer is taken as an example to provide explanations.

Point

MELSECNET/10 network module (A Series)

For details of the MELSECNET/10 network module (A Series), refer to the following manual.

Type MELSECNET/10 Network system (PLC to PLC network) Reference Manual

System configuration

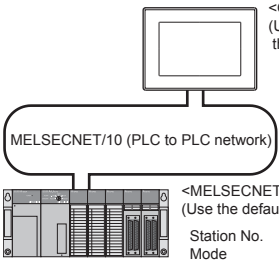

<GOT>
(Use the default value for settings other than the following.)

Station No. : 2
Mode : Online
Network No. : 1
Network range assignment: LB0100H to LB01FFH
LW0100H to LW01FFH

<MELSECNET/10 network module> *1
(Use the default value for settings other than the following.)

Station No. : 1
Mode : Online
Network type : MNET/10 (Control station)
Network No. : 1
Total stations : 2
Network range assignment: LB0000H to LB00FFH
LW0000H to LW00FFH

*1 The MELSECNET/10 network module is mounted at slot 0 of the base unit.
The start I/O No. of the MELSECNET/10 network module is set at "0".

Switch setting of MELSECNET/10 network module

Set for each setting switch.

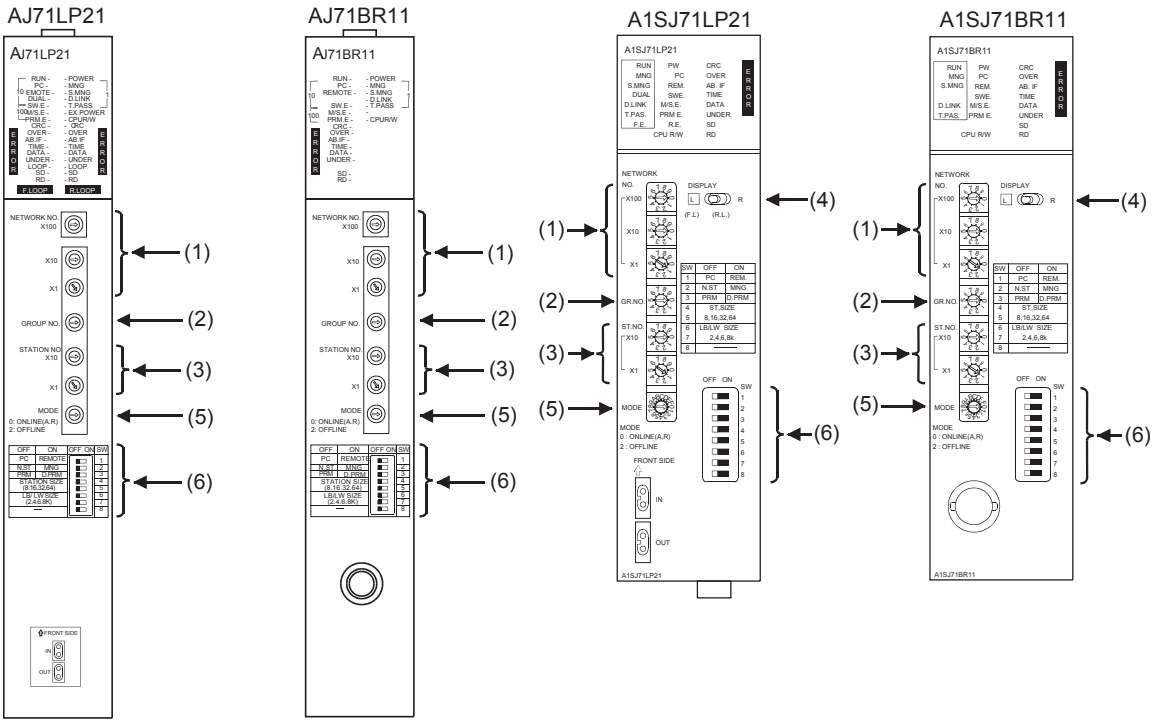

■Network number setting switch

Network number setting switch	Description	Set value	Setting necessity at GOT connection
NETWORK NO. X100 X10 X1	Network No. setting (Network No.1)*1*2	1	○

○: Necessary △: As necessary ×: Not necessary

*1 Specify the same network No. as that of the GOT.

*2 Do not specify a number between 240 and 255.

■Group number setting switch

Group number setting switch	Description	Set value	Setting necessity at GOT connection
GROUP.NO.	Group No. setting (No group setting)	0 (fixed)	○

○: Necessary △: As necessary ×: Not necessary

■Station number setting switch

Station number setting switch	Description	Set value	Setting necessity at GOT connection
STATION.NO. X10 X1	Station number setting (Station No.1)*1	1	○

○: Necessary : As necessary ×: Not necessary

*1 Do not set the same station No. as that of the GOT.

■LED indication select switch

LED indication select switch	Description	Set value	Setting necessity at GOT connection
DISPLAY L R (F.L) (R.L.)	LED indication select	L (F.L.)	△

○: Necessary △: As necessary ×: Not necessary

■Mode setting switch

Mode setting switch	Description	Set value	Setting necessity at GOT connection
MODE 0:ONLINE(A.R) 2:OFFLINE 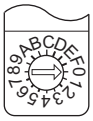	Mode setting (Online)	0 (fixed)	○

○: Necessary △: As necessary ×: Not necessary

■Condition setting switches

Condition setting switches	Setting switch	Description	Set value	Setting necessity at GOT connection
OFF ON SW 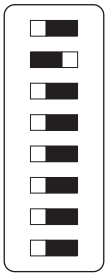	SW1	Network type (PLC to PLC net-work (PC))	OFF (fixed)	○
	SW2	Station type (Control station (MNG))	ON (fixed)	○
	SW3	Parameter for using*1 (common parameter (PRM))	OFF (fixed)	○
	SW4	No. of stations*1	OFF (fixed)	×
	SW5			
	SW6	Total B/W points*1	OFF (fixed)	×
	SW7			
	SW8	Not used	OFF (fixed)	×

○: Necessary △: As necessary ×: Not necessary

*1 The MELSECNET/10 network module can be communicated by default parameters.
For details, refer to the following manual.
Type MELSECNET/10 Network system (PLC to PLC network) Reference Manual

Point

When the switch setting (other than the LED indication select switch) is changed
Turn the PLC CPU OFF then ON again, or reset the PLC CPU.

[Network parameter] of GX Developer

■Network parameter

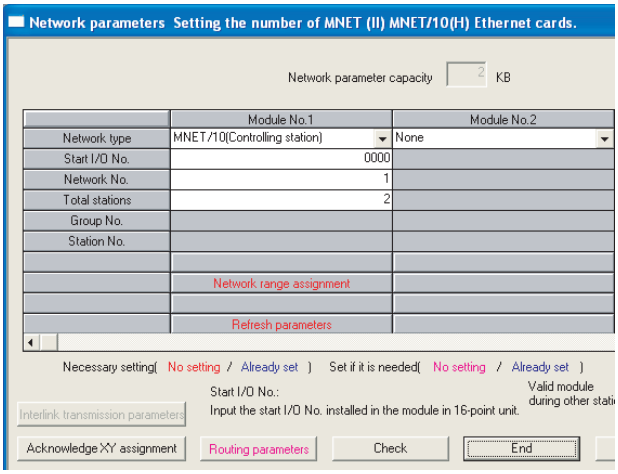

Item	Set value	Setting necessity at GOT connection
Network type	MNET/10 (Control station) (fixed)	○
Start I/O No.	0000H	○
Network No.*1	1	○
Total stations	2	○
Network range assignment	☞ Page 589 Network range assignment	△
Refresh parameters	(Use default value)	△
Interlink transmission parameters		×
Routing parameters	☞ Page 590 Routing parameter setting	△

○: Necessary △: As necessary ×: Not necessary

*1 Specify the same network No. as that of the network number setting switch of the MELSECNET/10 network module.

■Network range assignment

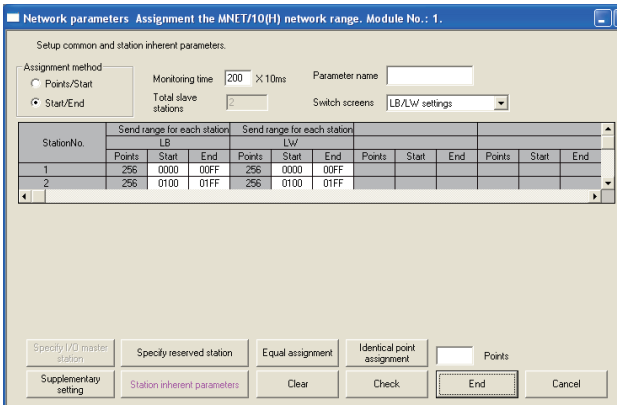

Item				Set value	Setting necessity at GOT connection
Monitoring time				200	△
LB/LW setting*1	Send range for each station (LB)	Station No.1	Start	0000H	△
			End	00FFH	△
		Station No.2	Start	0100H	△
			End	01FFH	△
	Send range for each station (LW)	Station No.1	Start	0000H	△
			End	00FFH	△
		Station No.2	Start	0100H	△
			End	01FFH	△
LX/LY setting*1				No setting	△
Specify I/O master station*1				No setting	△
Specify reserved station				No setting	△
Supplementary setting				(Use default value)	△
Station inherent parameters					△

○: Necessary △: As necessary ×: Not necessary

*1 Be sure to set it to perform the cyclic transmission.

Point

When changing the network parameter

After writing the network parameter to the PLC CPU, operate the PLC CPU ether turning OFF and then ON or resetting.

■Routing parameter setting

Up to 64 [Transfer Network No.]s can be set.

However, the same transfer network number cannot be set twice or more (multiple times).

Therefore, the one that can access to other station from the request source host GOT is 64 kinds of [Transfer Network No.]s.

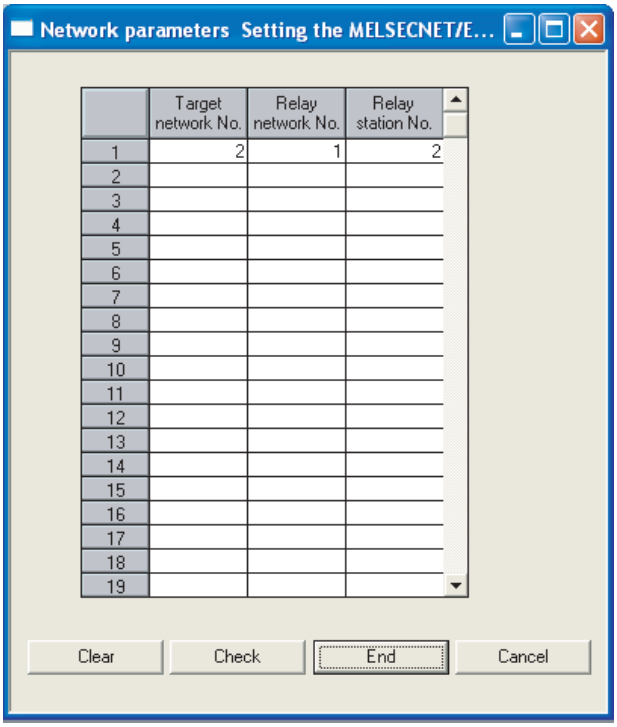

Item	Range
Target network No.	1 to 239
Relay network No.	1 to 239
Relay station No.	1 to 64

Point

Routing parameter setting of request source

Routing parameter setting is also necessary for the request source GOT.

For the setting, refer to the following.

☞ Page 558 Routing parameter setting

[Controller Setting] of GT Designer3

Item	Set value (Use default)
Retry	3times
Timeout Time	3sec

Point

[Controller Setting] of GT Designer3

For the setting method of [Controller Setting] of GT Designer3, refer to the following.

☞ Page 552 Setting communication interface (Controller Setting)

Setting of the MELSECNET/10 communication unit

Item	Set value
Network number setting switch	1: Network No.1
Group number setting switch	0: No group setting (fixed)
Station number setting switch	2: Station No.2
Mode setting switch	0: Online (fixed)

Point

Setting of the MELSECNET/10 communication unit

For the setting method of the MELSECNET/10 communication unit, refer to the following.

☞ Page 552 Setting communication interface (Controller Setting)

8.6 Precautions

Network configuration

Use MELSECNET/H connection (PLC to PLC network), MELSECNET/H connection (PLC to PLC network) in the MNET/10 mode, or MELSECNET/10 connection (PLC to PLC network) to configure a network including the GOT.
The following networks including the GOT cannot be configured.

- MELSECNET/H (Remote I/O network)
- MELSECNET/10 (Remote I/O network)

Network type setting

- Specify all the network modules on the same network as the same network type.

(MELSECNET/H Mode and MELSECNET/H Extended Mode cannot be mixed.)

- When connecting to MELSECNET/H in the QCPU redundant system, [MELSECNET/H Extended Mode] cannot be specified as the network type.

Monitoring range

Only PLC CPU of the same networks No. can be monitored in GOT.
For details, refer to the following manual.
📖GT Designer3 (GOT2000) Screen Design Manual

GOT startup in the MELSECNET/H or MELSECNET/10 connection

In the MELSECNET/H or MELSECNET/10 connection, the data link is started approximately 10 seconds after the GOT startup.

When a network error occurs in the system alarm

In the MELSECNET/H or MELSECNET/10 connection, when a network error occurs in the system alarm, the system alarm message cannot be canceled even though the causes are removed.
To cancel the system alarm display, restart the GOT.

MELSECNET/H network module version

For version restrictions of the MELSECNET/H network module, refer to the following manual.
📖Q corresponding MELSECNET/H Network System Reference Manual (PLC to PLC network)

Connection in the multiple CPU system

When the GOT is connected to multiple CPU system, the following time is taken until when the PLC runs.
QCPU (Q mode), Motion CPU (Q series): 10 seconds or more
MELDAS C70: 18 seconds or more
When the GOT starts before the PLC runs, a system alarm occurs.Adjust the opening screen time in the GOT setup so that no system alarm occurs.
📖GT Designer3 (GOT2000) Screen Design Manual

Connection to QCPU (Q mode)

Use function version B or later of the MELSECNET/H network module and QCPU (Q mode).

Connection to Q17nDCPU, Q170MCPU, Q170MSCPU(-S1), CNC C70, CRnQ-700, or CR800-Q (Q172DSRCPU)

The Q17nDCPU, Q170MCPU, Q170MSCPU(-S1), CNC C70, CRnQ-700, and CR800-Q (Q172DSRCPU) are applicable to the MELSECNET/H connection (PLC to PLC network) only.
For connecting the GOT to the MELSECNET/10 network system (PLC to PLC network), set the MELSECNET/H network system (PLC to PLC network) to the MELSECNET/10 mode.

Connection to QSCPU

The GOT can only read device data and sequence programs by the ladder monitor function in the QSCPU.
The GOT cannot write any data to the QSCPU.

Connection to Q170MCPU or Q170MSCPU(-S1)

Set [CPU No.] to 2 in the device setting to monitor the device of the Motion CPU area (CPU No. 2).
When [CPU No.] is set to 0 or 1, the device on the PLC CPU area (CPU No. 1) is monitored.
When [CPU No.] is set to the number other than 0 to 2, a communication error occurs and the monitoring cannot be executed.
For the setting of [CPU No.], refer to the following.
📖GT Designer3 (GOT2000) Screen Design Manual

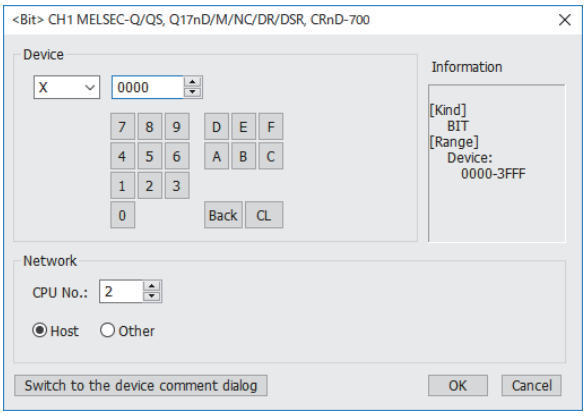

Connecting one PLC with multiple GOTs

When multiple GOTs access one PLC simultaneously, writing (transient/cyclic) and reading (transient) data to/from the GOTs may slow down.
The following countermeasures can prevent this slowdown.
<Countermeasures>

■Improving the PLC's response speed

Insert a COM instruction on the PLC to increase the response speed. Note that caution is required as the scan time will increase.

■Designing screens using cyclic devices

Create screens using cyclic devices instead of transient devices.

■Splitting connection destinations of the GOTs into multiple systems

Add a master/local module to the PLC and split the connection destinations of the GOTs into multiple systems. Improve the current system configuration.

(Example of current system configuration)

In the following system configuration, the GOTs access one module.

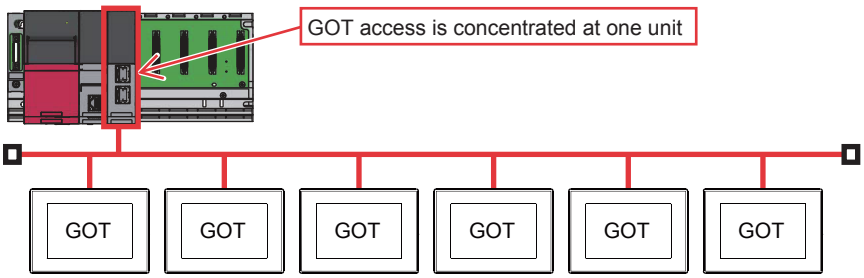

(Improvement measure)

- Adding a module to the PLC

Add a module to the PLC to disperse access destinations for the GOTs.

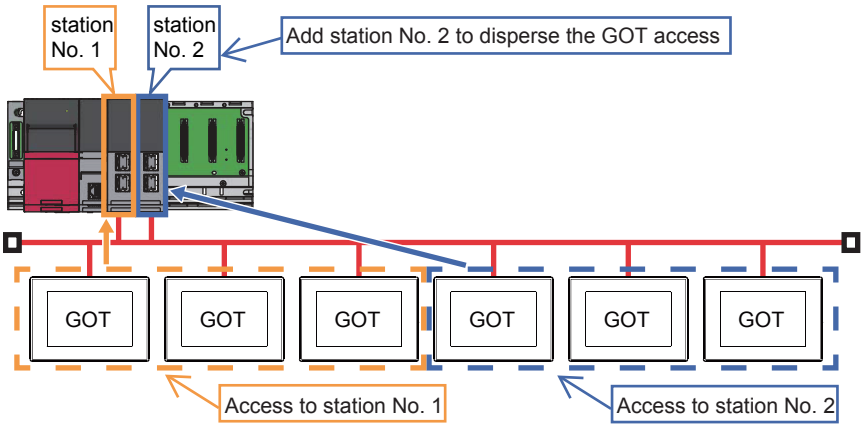

- Splitting the network

Split the network to disperse accesses from the GOTs.

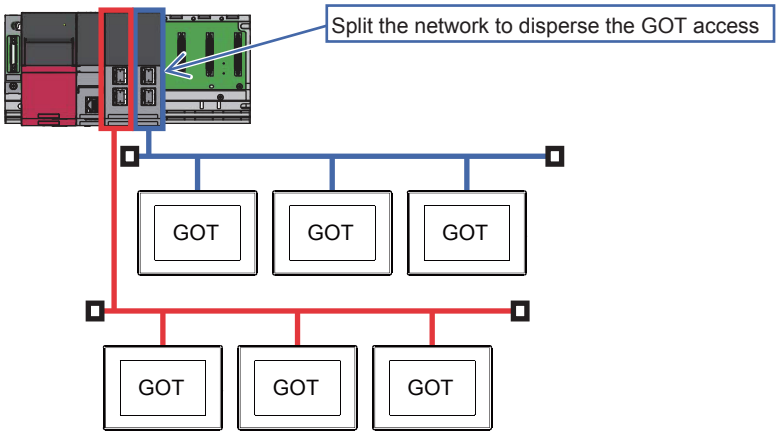

9 CC-Link IE TSN CONNECTION

- Page 595 Connectable Model List
- Page 602 System Configuration
- Page 604 GOT Side Settings
- Page 612 PLC Side Settings
- Page 618 CC-Link IE TSN Communication Unit Firmware
- Page 622 Precautions

Point

BootOS version of the GOT

Install version AN or later of BootOS on the GOT so that the GOT supports the CC-Link IE TSN connection.

For the procedure to check the BootOS version and upgrade the version, refer to the following manuals.

GT Designer3 (GOT2000) Screen Design Manual

GOT2000 Series User's Manual (Utility)

9.1 Connectable Model List

PLC/Motion CPU

The following table shows the connectable models.

Series	Model name	Clock	Communication type	Connectable model	Refer to
MELSEC iQ-R Series	R00CPU *1	○	CC-Link IE TSN	GT 27 GT 25	Page 602 System Configuration
	R01CPU *1				
	R02CPU *1				
	R04CPU *2				
	R08CPU *2				
	R16CPU *2				
	R32CPU *2				
	R120CPU *2				
	R08PCPU	○	-	-	-
	R16PCPU				
	R32PCPU				
	R120PCPU				
	R04ENCPU *2	○	CC-Link IE TSN	GT 27 GT 25	Page 602 System Configuration
	R08ENCPU *2				
	R16ENCPU *2				
	R32ENCPU *2				
	R120ENCPU *2				
	R08PSFCPU	○	-	-	-
	R16PSFCPU				
	R32PSFCPU				
	R120PSFCPU				
	R08SFCPU *3	○	CC-Link IE TSN	GT 27 GT 25	Page 602 System Configuration
	R16SFCPU *3				
	R32SFCPU *3				
	R120SFCPU *3				

Series	Model name	Clock	Communication type	Connectable model	Refer to
Motion CPU (MELSEC iQ-R Series)	R16MTCPU	○	-	-	-
	R32MTCPU				
	R64MTCPU				
C Controller module (MELSEC iQ-R Series)	R12CCPU-V	○	CC-Link IE TSN	GT 27 GT 25	☞ Page 602 System Configuration
MELSECWinCPU (MELSEC iQ-R Series)	R102WCPU-W	×	CC-Link IE TSN	GT 27 GT 25	☞ Page 602 System Configuration
CNC C80	R16NCCPU-S1	○	-	-	-
Robot controller (MELSEC iQ-R Series)	CR800-R(R16RTCPU)	○	-	-	-
CC-Link IE Field Network head module	RJ72GF15-T2	×	-	-	-
MELSEC iQ-F Series	FX5U *4	○	CC-Link IE TSN	GT 27 GT 25	☞ Page 602 System Configuration
	FX5UC *4				
	FX5UJ				
	FX5S	○	-	-	-

Series	Model name	Clock	Communication type	Connectable model	Refer to
MELSEC-Q (Q mode)	Q00JCPU	○	-	-	-
	Q00CPU				
	Q01CPU				
	Q02CPU				
	Q02HCPU				
	Q06HCPU				
	Q12HCPU				
	Q25HCPU				
	Q02PHCPU				
	Q06PHCPU				
	Q12PHCPU				
	Q25PHCPU				
	Q12PRHCPU(Main base)				
	Q25PRHCPU(Main base)				
	Q12PRHCPU(Extension base)	○	-	-	-
	Q25PRHCPU(Extension base)				
	Q00UJCPU Q00UJCPU-S8	○	-	-	-
	Q00UCPU				
	Q01UCPU				
	Q02UCPU				
	Q03UDCPU				
	Q04UDHCPU				
	Q06UDHCPU				
	Q10UDHCPU				
	Q13UDHCPU				
	Q20UDHCPU				
	Q26UDHCPU				
	Q03UDECPU				
	Q04UDEHCPU				
	Q06UDEHCPU				
	Q10UDEHCPU				
	Q13UDEHCPU				
	Q20UDEHCPU				
	Q26UDEHCPU				
	Q50UDEHCPU				
	Q100UDEHCPU				
	Q03UDVCPU	○	-	-	-
	Q04UDVCPU				
	Q06UDVCPU				
	Q13UDVCPU				
	Q26UDVCPU				
C Controller module (Q Series)	Q12DCCPU-V Q24DHCCPU-V/VG Q24DHCCPU-LS Q26DHCCPU-LS	○	-	-	-
MELSEC-QS	QS001CPU	○	-	-	-

Series	Model name	Clock	Communication type	Connectable model	Refer to
MELSEC-L	L02CPU L06CPU L26CPU L26CPU-BT L02CPU-P L06CPU-P L26CPU-P L26CPU-PBT L02SCPU L02SCPU-P	○	-	-	-
MELSEC-Q (A mode)	Q02CPU-A Q02HCPU-A Q06HCPU-A	○	-	-	-
MELSEC-QnA (QnACPU)	Q2ACPU Q2ACPU-S1 Q3ACPU Q4ACPU Q4ARCPU	○	-	-	-
MELSEC-QnA (QnASCPU)	Q2ASCPU Q2ASCPU-S1 Q2ASHCPU Q2ASHCPU-S1	○	-	-	-
MELSEC-A (AnCPU)	A2UCPU A2UCPU-S1 A3UCPU A4UCPU A2ACPU A2ACPUP21 A2ACPUR21 A2ACPU-S1 A2ACPUP21-S1 A2ACPUR21-S1 A3ACPU A3ACPUP21 A3ACPUR21 A1NCPU A1NCPUP21 A1NCPUR21 A2NCPU	○	-	-	-
	A2NCPUP21	○	-	-	-
	A2NCPUR21				
	A2NCPU-S1				
	A2NCPUP21-S1				
	A2NCPUR21-S1				
	A3NCPU				
	A3NCPUP21				
	A3NCPUR21				
MELSEC-A (AnSCPU)	A2USCPU	○	-	-	-
	A2USCPU-S1				
	A2USHCPU-S1				
	A1SCPU				
	A1SCPUC24-R2				
	A1SHCPU				
	A2SCPU				
	A2SHCPU				
	A1SJCPU				
	A1SJCPU-S3				
	A1SJHCPU				

Series	Model name	Clock	Communication type	Connectable model	Refer to
MELSEC-A	A0J2HCPU	×	-	-	-
	A0J2HCPUP21				
	A0J2HCPUR21				
	A0J2HCPU-DC24				
	A2CCPU	○	-	-	-
	A2CCPUP21				
	A2CCPUR21				
	A2CCPUC24				
	A2CCPUC24-PRF				
	A2CJCPU-S3				
	A1FXCPU				
Motion CPU(Q Series)	Q172CPU	○	-	-	-
	Q173CPU				
	Q172CPUN				
	Q173CPUN				
	Q172HCPU				
	Q173HCPU				
	Q172DCPU	○	-	-	-
	Q173DCPU				
	Q172DCPU-S1				
	Q173DCPU-S1				
	Q172DSCPU				
	Q173DSCPU				
	Q170MCPU				
	Q170MSCPU				
	Q170MSCPU-S1				
Motion CPU (A Series)	A273UCPU	○	-	-	-
	A273UHCPU				
	A273UHCPU-S3				
	A373UCPU				
	A373UCPU-S3				
	A171SCPU				
	A171SCPU-S3				
	A171SCPU-S3N				
	A171SHCPU				
	A171SHCPUN				
	A172SHCPU				
	A172SHCPUN				
	A173UHCPU				
	A173UHCPU-S1				
MELSEC-WS	WS0-CPU0	×	-	-	-
	WS0-CPU1				
	WS0-CPU3				
MELSECNET/H Remote I/O station	QJ72LP25-25	×	-	-	-
	QJ72LP25G				
	QJ72BR15				
CC-Link IE Field Network head module	LJ72GF15-T2	×	-	-	-
CC-Link IE Field Network Ethernet adapter module	NZ2GF-ETB	×	-	-	-
CNC C70	Q173NCCPU	○	-	-	-

Series	Model name	Clock	Communication type	Connectable model	Refer to
Robot controller (Q Series)	CRnQ-700 (Q172DRCPU) CR750-Q (Q172DRCPU) CR751-Q (Q172DRCPU) CR800-Q (Q172DSRCPU)	○	-	-	-
MELSEC-FX	FX0	×	-	-	-
	FX0S				
	FX0N				
	FX1				
	FX2	×			
	FX2C				
	FX1S	○			
	FX1N				
	FX2N				
	FX1NC				
	FX2NC	×			
	FX3S	○			
	FX3G				
	FX3GC				
	FX3U				
	FX3UC				

*1 Use the following firmware version.
When configuring a line topology or star topology using RJ71GN11-T2: 11 or later
When configuring a ring topology using RJ71GN11-T2: 18 or later
When using RJ71GN11-EIP: 29 or later

*2 Use the following firmware version.
When configuring a line topology or star topology using RJ71GN11-T2: 43 or later
When configuring a ring topology using RJ71GN11-T2: 50 or later
When using RJ71GN11-EIP: 62 or later

*3 Use firmware version 20 or later.

*4 Use firmware version 1.250 or later.

CC-Link IE TSN-equipped module

CPU series	CC-Link IE TSN-equipped module
MELSEC iQ-R Series	RJ71GN11-T2 *1 RJ71GN11-EIP*2
MELSEC iQ-F Series	FX5-CCLGN-MS *2

*1 For the ring connection, use firmware version 10 or later.
*2 The ring connection is not supported.

Motion module

CPU series	Motion module
MELSEC iQ-R Series	RD78G4 RD78G8 RD78G16 RD78G32 RD78G64 RD78GHV RD78GHW

9.2 System Configuration

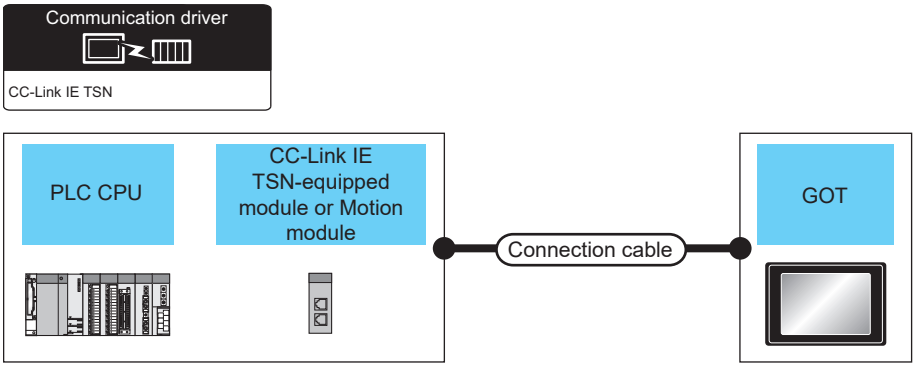

PLC			Connection cable		GOT		Number of connectable equipment
Model name	**CC-Link IE TSN-equipped module or Motion module**	**Communication type**	**Cable model** *1*2	**Max distance** *3	**Option device** *4	**Model**	
MELSEC iQ-R Series C Controller module (MELSEC iQ-R Series) *7 MELSECWinCPU (MELSEC iQ-R Series)	RJ71GN11-T2 *5	CC-Link IE TSN	• 1000BASE-T Double-shielded twisted pair cable (STP) or twisted pair cable: Category 5e or higher • 100BASE-TX Double-shielded twisted pair cable (STP) or twisted pair cable: Category 5 or higher	12100m	GT25-J71GF13-T2 *5*6	GT27 GT25	Up to 120 GOTs
MELSEC iQ-R Series (RnCPU, RnENCPU)	RJ71GN11-EIP*5	CC-Link IE TSN	• 1000BASE-T Double-shielded twisted pair cable (STP) or twisted pair cable: Category 5e or higher • 100BASE-TX Double-shielded twisted pair cable (STP) or twisted pair cable: Category 5 or higher	12100m	GT25-J71GF13-T2 *5*6	GT27 GT25	Up to 120 GOTs
MELSEC iQ-R Series	RD78G4*5 RD78G8*5 RD78G16*5 RD78G32*5 RD78G64*5 RD78GHV*5 RD78GHW*5	CC-Link IE TSN	• 1000BASE-T Double-shielded twisted pair cable (STP) or twisted pair cable: Category 5e or higher • 100BASE-TX Double-shielded twisted pair cable (STP) or twisted pair cable: Category 5 or higher	12100m	GT25-J71GF13-T2 *5*6	GT27 GT25	Up to 120 GOTs

PLC			Connection cable		GOT		Number of connectable equipment
Model name	CC-Link IE TSN-equipped module or Motion module	Communication type	Cable model *1*2	Max distance *3	Option device *4	Model	
MELSEC iQ-F Series	FX5-CCLGN-MS	CC-Link IE TSN	• 1000BASE-T Double-shielded twisted pair cable (STP) or twisted pair cable: Category 5e or higher • 100BASE-TX Double-shielded twisted pair cable (STP) or twisted pair cable: Category 5 or higher	12100m	GT25-J71GF13-T2 *5	GT27 GT25	Up to 60 GOTs

*1 When using a hub, use a TSN Switch or General-purpose Switch according to the system configuration.
For usable TSN Switches and General-purpose Switches, refer to the following.
MELSEC iQ-R CC-Link IE TSN User's Manual (Startup)
MELSEC iQ-R CC-Link IE TSN Plus Master/Local Module User's Manual
MELSEC iQ-R Motion Module User's Manual (Startup)
MELSEC iQ-F FX5 User's Manual (CC-Link IE TSN)

*2 Use the straight cable.

*3 The overall distance and station-to-station distance vary according to the connection method (line, star, or ring) and system configuration.
For details, refer to the following manual.
MELSEC iQ-R CC-Link IE TSN User's Manual (Startup)
MELSEC iQ-R CC-Link IE TSN Plus Master/Local Module User's Manual
MELSEC iQ-R Motion Module User's Manual (Startup)
MELSEC iQ-F FX5 User's Manual (CC-Link IE TSN)

*4 GT25-W and GT2505-V do not support option devices.

*5 Depending on the combination of the firmware version of the CC-Link IE TSN-equipped module or Motion module on the master station and the firmware version of the CC-Link IE TSN communication unit (GT25-J71GN13-T2), the GOT cannot access the network.
For the combinations of firmware versions, refer to the following.
Page 623 Firmware versions of the CC-Link IE TSN-equipped module or Motion module on the master station and CC-Link IE TSN communication unit

*6 The firmware version must be 05 or later when monitoring a network where a controller compatible with CC-Link IE TSN protocol version 2.0 exists.
For how to check or update the firmware version of the CC-Link IE TSN communication unit, refer to the following.
Page 618 CC-Link IE TSN Communication Unit Firmware

*7 For C Controller module (MELSEC iQ-R series), use firmware version 15 or later.

Point

For the system configuration of the CC-Link IE TSN-equipped module, refer to the following.
MELSEC iQ-R CC-Link IE TSN User's Manual (Startup)
MELSEC iQ-R CC-Link IE TSN Plus Master/Local Module User's Manual
MELSEC iQ-F FX5 User's Manual (CC-Link IE TSN)
For the system configuration of the Motion module, refer to the following.
MELSEC iQ-R Motion Module User's Manual (Startup)

9.3 GOT Side Settings

Setting communication interface (Controller Setting)

Set the channel of connecting equipment.

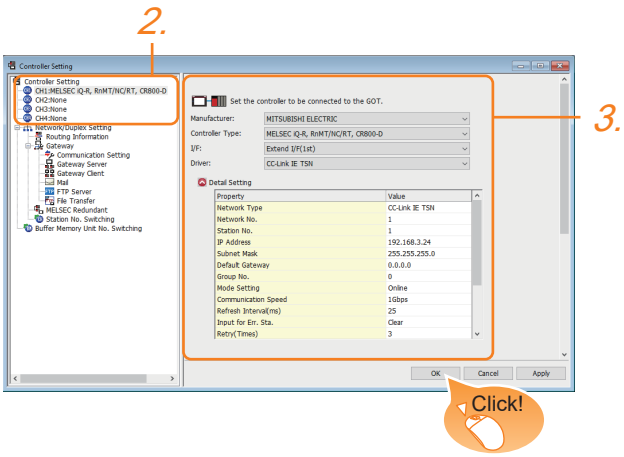

1. Select [Common] → [Controller Setting] from the menu.

2. In the [Controller Setting] window, select the channel No. to be used from the list menu.

3. Set the following items.

- [Manufacturer]: [MITSUBISHI ELECTRIC]
- [Controller Type]: Configure the setting according to the controller to be connected.
- [I/F]: Extend I/F
- [Driver]: [CC-Link IE TSN]
- [Detail Setting]: Configure the settings according to the usage environment.

☞ Page 605 Communication detail settings

4. When you have completed the settings, click the [OK] button.

Point

The settings of connecting equipment can be confirmed in [I/F Communication Setting].
For details, refer to the following.
☞ Page 54 I/F communication setting

Communication detail settings

Make the settings according to the usage environment.

Property	Value
Network Type	CC-Link IE TSN
Network No.	1
Station No.	1
IP Address	192.168.3.24
Subnet Mask	255.255.255.0
Default Gateway	0.0.0.0
Group No.	0
Mode Setting	Online
Communication Speed	1Gbps
Refresh Interval(ms)	25
Input for Err. Sta.	Clear
Retry(Times)	3
Timeout Time(Sec)	3
Delay Time(ms)	0
Monitor Speed	High(Normal)
CPU No. switching GD device first No. (3 points)	500
Module No. switching GD device first No. (16 points	550
Servo axis switching GD device first No. (16 points)	10

Item	Description	Range
Network Type	Set the network Type.	CC-Link IE TSN
Network No.	Set the network No. of the GOT. (Default: 1)	1 to 239
Station No.	Set the station No. of the GOT. (Default: 1)	1 to 120
IP Address *1	Set the IP address of the GOT. (Default: 192.168.3.24)	0.0.0.1 to 223.255.255.254
Subnet Mask	Set the subnet mask for the sub network. (Only for connection via router) If the sub network is not used, the default value is set. (Default: 255.255.255.0)	0.0.0.0 to 255.255.255.255 *2
Default Gateway	Set the router address of the default gateway where the GOT is connected. (Only for connection via router) (Default: 0.0.0.0)	0.0.0.0 to 223.255.255.254
Group No.	-	0 (fixed)
Mode Setting	Set the operation mode of the GOT. (Default: Online) For details on the unit communication test mode, refer to the following. ☞ Page 607 Unit Communication test	Online, Offline, Module Communication Test
Communication Speed	Set the communication speed of the GOT. (Default: 1Gbps)	1Gbps, 100Mbps *3
Refresh Interval	Set the number of refreshes to secure the send/receive data in station units during communication. (Default: 25ms)	1 to 1000ms
Input for Error Station	Set the hold/clear of input from the station where the data link is faulty due to some reason such as turning the power OFF. (Default: Clear)	Clear, Hold
Retry	Set the number of retries to be performed when a communication timeout occurs. When receiving no response after retries, the communication times out. (Default: 3times)	0 to 5times
Timeout Time	Set the time period for a communication to time out. (Default: 3sec)	1 to 90sec
Delay Time	Set the delay time for reducing the load of the network/destination PLC. (Default: 0ms)	0 to 300ms
Monitor Speed	Set the monitor speed of the CC-Link IE TSN network. This setting is not valid in all systems. (Default: High(Normal))	High(Normal), Middle, Low
CPU No. switching GD device first No. (3 points)	Set the start device number of the GD devices for CPU No. switching. (Default: 500) For the details, refer to the following. ☞ Page 608 Start device number of the GD devices for CPU number switching	0 to 65520

Item	Description	Range
Module No. switching GD device first No. (16 points)	Set the start device number of the GD devices for module No. switching. (Default: 550) For the details, refer to the following. ☞ Page 609 Start device number of the GD devices for module number switching	0 to 65520
Servo axis switching GD device first No. (16 points)	Set the servo axis switching GD device first No. (Default: 10) For the details, refer to the following. ☞ Page 610 Servo axis switching GD device first No.	0 to 65520

*1 If any of the following settings is configured in the IP address, a communication timeout error occurs.
- The third octet and fourth octet are all 1 (*.*.255.255) or all 0 (*.*.0.0).
- The host part is all 1 (*.*.*.255) or all 0 (*.*.*.0).
- Some reserved addresses determined for special applications

For the details, refer to the following manual.
📖MELSEC iQ-R CC-Link IE TSN User's Manual (Application)
📖MELSEC iQ-R CC-Link IE TSN Plus Master/Local Module User's Manual
📖MELSEC iQ-R Motion Module User's Manual (Network)
📖MELSEC iQ-F FX5 User's Manual (CC-Link IE TSN)

*2 When the subnet mask field is filled with 0, the operation is the same as when the field is left blank.

*3 When setting to 100Mbps, the following conditions must be satisfied.
- CC-Link IE TSN communication unit (GT25J71GN13-T2): Firmware version 02 or later
- CC-Link IE TSN master/local module (RJ71GN11-T2): Firmware version 04 or later

Point

- Communication interface setting by the Utility

The communication interface setting can be changed on the Utility's [Communication setting] after writing [Controller Setting] of project data.
For details on the Utility, refer to the following manual.
📖GOT2000 Series User's Manual (Utility)

- Precedence in communication settings

When settings are made by GT Designer3 or the Utility, the latest setting is effective.

- Setting the refresh interval

For [Refresh Interval(ms)] in [Controller Setting] in GT Designer3, set 5 ms or more per 1K words for the total size of the device set in [Network Configuration Settings] in GX Works3.
Setting less than 5 ms may affect the processing of the GOT such as a decrease of the monitoring speed.
The following shows setting examples of the total device size and refresh interval.

Total device size	Refresh Interval
1K words	5 ms or more
2K words	10 ms or more
3K words	15 ms or more
5K words	25 ms or more
36K words	180 ms or more

Unit Communication test

In the unit communication test, connect port 1 and port 2 of the CC-Link IE TSN communication unit mounted on the GOT with a network cable, and check if the unit operates properly with the GOT.
The following shows the test procedure and how to check the test result.

1. Perform one of the following operations to set the GOT to the unit communication test mode.

- Write the project data for which [Mode Setting] in [Detail Setting] is set to [Stand-alone test mode] to the GOT.
- Set [Mode setting] in [Detail setting] to [Module Communication Test] in the GOT utility.

2. A unit communication test will start at a GOT startup.

3. After the test is complete, check the result with the ERR LED on the communication unit and GOT internal devices (CC-Link IE TSN Module Communication Test Status (GS1114) or CC-Link IE TSN Module Communication Test Error (GS1115)).

Check		Test result
ERR LED on the communication unit		OFF: Normal ON: Error
GOT internal device	CC-Link IE TSN Module Communication Test Status (GS1114)	Notifies the execution status of a communication test of the CC-Link IE TSN communication unit. • b0: Turns on when a communication test is executed. • b1: Is on while a communication test is being executed. • b2: Turns on when a communication test is complete. • b3 to b15: Use prohibited
	CC-Link IE TSN Module Communication Test Error (GS1115)	Notifies that an error has occurred during a communication test of the CC-Link IE TSN communication unit. • b0: Turns on if there is a problem with the port 1 side of the CC-Link IE TSN communication unit. • b1: Turns on if there is a problem with the connection interface (port 1) or the Ethernet cable terminal connected to port 1. • b2: Turns on if there is a problem with the port 1 side Ethernet cable of the CC-Link IE TSN communication unit. • b3 to b7: Use prohibited • b8: Turns on if there is a problem with the port 2 side of the CC-Link IE TSN communication unit. • b9: Turns on if there is a problem with the connection interface (port 2) or the Ethernet cable terminal connected to port 2. • b10: Turns on if there is a problem with the port 2 side Ethernet cable of the CC-Link IE TSN communication unit. • b11 to b15: Use prohibited

For details on the GOT internal devices (CC-Link IE TSN Module Communication Test Status (GS1114) and CC-Link IE TSN Module Communication Test Error (GS1115)), refer to the following.
📖GT Designer3 (GOT2000) Screen Design Manual

4. If no error is detected, change [Module Communication Test] in [Mode setting] of [Detail setting].

Since the communication with the controller is not performed when [Mode setting] is set to [Module Communication Test], the communication timeout error occurs when the device of controller is monitored.

5. If any error is detected, replace the communication unit.

Start device number of the GD devices for CPU number switching

■Specifying a CPU number with a device

[CPU No.] can be specified with the GOT internal registers (GD devices) by specifying a value (100 to 102) to [CPU No.] in the device setting dialog in GT Designer3.

Set the start device number of the GD devices to be used in [CPU No. switching GD device first No. (3 points)].

Specify [CPU No.] with the three consecutive GD devices, starting the set device number.

When [500] is set to [CPU No. switching GD device first No. (3 points)], GD500 to GD502 are used to specify [CPU No.] as shown in the following table.

CPU No.	GD device	Setting range
100	GD500	1 to 4 Setting an invalid value causes a communication timeout error. Specifying a nonexistent CPU No. or a CPU No. not supporting a multiple CPU system with a device causes a controller error.
101	GD501	
102	GD502	

■Specifying a CPU number with a device on the initially-displayed screen

Set [CPU No. switching GD device first No. (3 points)] so that the values of the GD devices are retained and monitored upon the GOT startup.

■Specifying a CPU number with a device in a multi-channel connection

If the setting range of [CPU No. switching GD device first No. (3 points)] set in each channel overlaps, the monitoring target CPU No. set to each channel is switched simultaneously.

Set [CPU No. switching GD device first No. (3 points)] in each channel so that the setting range does not overlap.

■Specifying a CPU number and a station number with devices in a multi-channel connection

When GD10 to GD25 are used to specify the station No. of an inverter or non-Mitsubishi temperature controller connected, setting [10] to [CPU No. switching GD device first No. (3 points)] in a different channel switches the monitoring target CPU No. and station No. of an inverter or non-Mitsubishi temperature controller set to each channel simultaneously.

Set [CPU No. switching GD device first No. (3 points)] so that the setting range does not overlap the station No. of an inverter or non-Mitsubishi temperature controller.

Start device number of the GD devices for module number switching

■Specifying a module number with a device

In a connection via a simple motion module, [Unit No.] can be specified with the GOT internal registers (GD devices) by specifying a value (100 to 10F) to [Unit No.] in the device setting dialog in GT Designer3.
Set the start device number of the GD devices to be used in [Module No. switching GD device first No. (16 points)].
Specify [Unit No.] with the 16 consecutive GD devices, starting the set device number.
When [550] is set to [Module No. switching GD device first No. (16 points)], GD550 to GD565 are used to specify [Unit No.] as shown in the following table.

Unit No.	GD device	Setting range
100	GD550	The setting range depends on [Unit Type]. • When [MELSEC iQ-R, RnMT/NC/RT, CR800-D], [MELSEC iQ-R, RnMT/RT, CR800-D], [MELSEC-Q/QS, Q17nD/M/NC/DR/DSR, CRnD-700], [MELSEC-Q, Q17nD/M/DR/DSR, CRnD-700], [MELSEC-L] or [MELIPC] is selected for [Unit Type] 00 to FF • When [MELSEC iQ-F] is selected for [Unit Type] 01 to 10 Setting an invalid value causes a device range error.
101	GD551	
102	GD552	
103	GD553	
104	GD554	
105	GD555	
106	GD556	
107	GD557	
108	GD558	
109	GD559	
10A	GD560	
10B	GD561	
10C	GD562	
10D	GD563	
10E	GD564	
10F	GD565	

■Specifying a module number with a device on the initially-displayed screen

Set [Module No. switching GD device first No. (16 points)] so that the values of the GD devices are retained and monitored upon the GOT startup.

■Specifying a module number with a device in a multi-channel connection

If the setting range of [Module No. switching GD device first No. (16 points)] set in each channel overlaps, the module No. of the simple motion module via the servo amplifier device of each channel is switched simultaneously.
Set [Module No. switching GD device first No. (16 points)] for each channel so that the setting range does not overlap.

■Specifying a station number and a module number with devices in a multi-channel connection

When GD10 to GD25 are used to specify the station No. of an inverter or non-Mitsubishi temperature controller connected, setting [10] to [Module No. switching GD device first No. (16 points)] switches the module No. of the simple motion module via the servo amplifier device and the station No. of an inverter or non-Mitsubishi temperature controller set to each channel simultaneously.
Set [Module No. switching GD device first No. (16 points)] so that the setting range does not overlap the station No. of an inverter or non-Mitsubishi temperature controller.

Servo axis switching GD device first No.

■Indirect specification of the servo axis No.

In a connection via a Motion CPU or Simple Motion module, a servo axis No. can be indirectly specified with GOT internal registers (GD devices) by specifying a value (100 to 115) to the axis No. of the servo amplifier device.
Set the start device number of the GD devices to be used in [Servo axis switching GD device first No. (16 points)].
Specify a servo axis number with 16 consecutive GD devices, starting the set device number.
When [10] is set to [Servo axis switching GD device first No. (16 points)], GD10 to GD25 are used to specify a servo axis number as shown in the following table.

Servo axis No.	GD device	Setting range
100	GD10	1 to 64 Setting an invalid value causes a device range error.
101	GD11	
102	GD12	
103	GD13	
104	GD14	
105	GD15	
106	GD16	
107	GD17	
108	GD18	
109	GD19	
110	GD20	
111	GD21	
112	GD22	
113	GD23	
114	GD24	
115	GD25	

■Specifying a servo axis number with a device on the initially-displayed screen

Set [Servo axis switching GD device first No. (16 points)] so that the values of the GD devices are retained and monitored upon the GOT startup.

■Specifying a servo axis number with a device in a multi-channel connection

If the setting rage of [Servo axis switching GD device first No. (16 points)] set in each channel overlaps, the axis No. of the servo amplifier of each channel is switched simultaneously.
Set [Servo axis switching GD device first No. (16 points)] for each channel so that the setting range does not overlap.

■Specifying a station number and a servo axis number with devices in a multi-channel connection

When GD10 to GD25 are used to specify the station No. of an inverter or non-Mitsubishi temperature controller connected, setting [10] to [Servo axis switching GD device first No. (16 points)] switches the axis No. of the servo amplifier and the station No. of an inverter or non-Mitsubishi temperature controller set to each channel simultaneously.
Set [Servo axis switching GD device first No. (16 points)] so that the setting range does not overlap the station No. of an inverter or non-Mitsubishi temperature controller.

Routing parameter setting

Up to 64 [Transfer Network No.]s can be set.
However, the same transfer network number cannot be set twice or more (multiple times).
Therefore, the one that can access to other station from the request source host GOT is 64 kinds of [Transfer Network No.]s.

Point

Routing parameter setting
When communicating within the host network, routing parameter setting is unnecessary.
For details of routing parameters, refer to the following manual.
MELSEC iQ-R CPU Module User's Manual (Application)

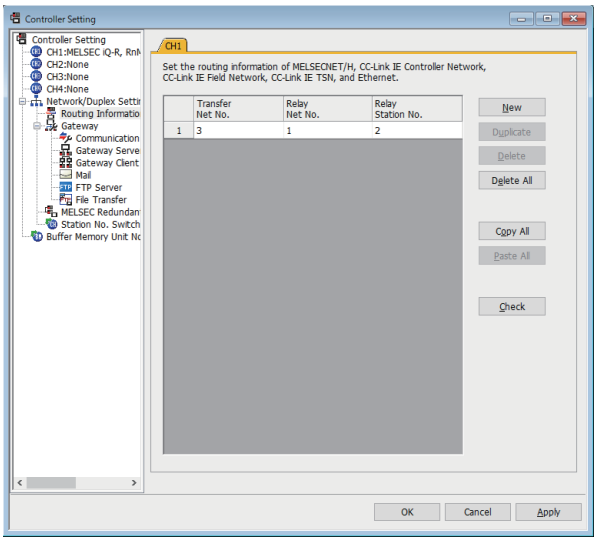

Item	Range
Transfer Network No.	1 to 239
Relay Network No.	1 to 239
Relay Station No.	0 to 120

Point

• Routing parameter setting of relay station
Routing parameter setting is also necessary for the relay station.
For the setting, refer to the following.
☞ Page 612 PLC Side Settings
• Parameter reflection function of MELSOFT Navigator
The color of the cells for the items which are reflected to GT Designer3 from MELSOFT Navigator changes to green. Set items, which are displayed in green cells, from the MELSOFT Navigator.
When the settings of Transfer network No., Relay network No. or Relay station No. are reflected to the parameter from the MELSOFT Navigator, those settings are added. Items set in advance are not deleted.
However, if the target network No. overlaps, the item set in advance is overwritten.
The routing information is used manually by the user when the data is created. Therefore, after changing the network configuration by MELSOFT Navigator, create a routing information again. For details of the creation of the routing information, refer to the MELSOFT Navigator help.

9.4 PLC Side Settings

This section describes the settings of the GOT, CC-Link IE TSN-equipped module, and Motion module in the following system configuration.

Point

For details on the CC-Link IE TSN-equipped module, refer to the following.
MELSEC iQ-R CC-Link IE TSN User's Manual (Startup)
MELSEC iQ-R CC-Link IE TSN Plus Master/Local Module User's Manual
MELSEC iQ-F FX5 User's Manual (CC-Link IE TSN)
For details on the Motion module, refer to the following.
MELSEC iQ-R Motion Module User's Manual (Startup)

System configuration

The following shows a system configuration example for connecting to the CC-Link IE TSN master/local module (RJ71GN11-T2)

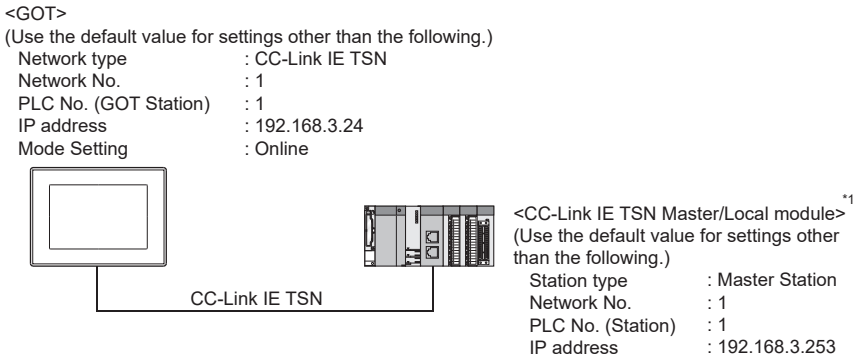

*1 The CC-Link IE TSN master/local module is mounted on slot 0 of the base unit.
The start I/O No. of the CC-Link IE TSN master/local module is set to "0".

[Parameter] in GX Works3

The following shows a parameter setting example for connecting to the CC-Link IE TSN master/local module (RJ71GN11-T2).

Point

- For connection with the CC-Link IE TSN master/local module (RJ71GN11-T2) in a ring topology, use GX Works3 version 1.065T or later.
- For connection with the CC-Link IE TSN Plus master/local module (RJ71GN11-EIP), use GX Works3 version 1.082L or later.
- For connection with the CC-Link IE TSN master/local module (FX5-CCLGN-MS), use GX Works3 version 1.085P or later.

CPU parameter

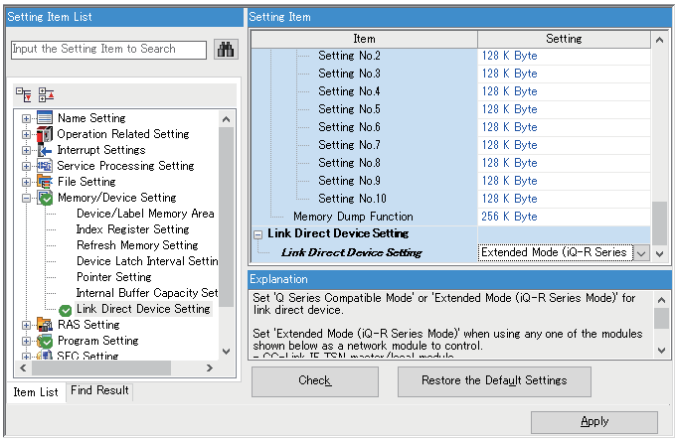

○: Necessary △: As necessary ×: Not necessary

Item	Set value	Setting necessity at GOT connection
Link Direct Device Setting	Extended Mode (iQ-R Series Mode)	○

Module parameter

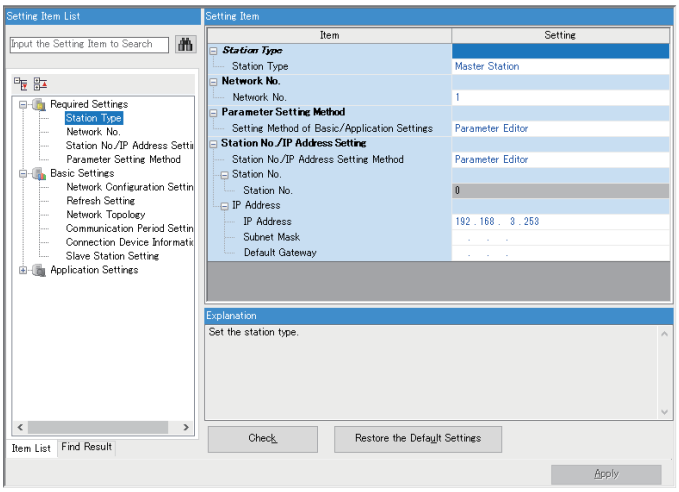

○: Necessary △: As necessary ×: Not necessary

Item		Set value	Setting necessity at GOT connection
Station type		Master Station	○
Network No. *1		1	○
Setting Method of Basic/Application Settings		Parameter Editor	○
Station No./IP Address Setting Method		Parameter Editor	○
Station No.		0 (fixed)	○
IP Address		192.168.3.253 (Use default value)	△
Subnet Mask		-	×
Default Gateway		-	×
Channel No. *2		Parameter Editor	○
Network Configuration Settings		☞ Page 615 Network Configuration Settings	○
Refresh Setting		Use default value	△
Network Topology		Line/Star	○
Basic Period Setting	Setting in Units of 1μs	Not set	○
	Communication Period Interval Setting (Do not Set it in Units of 1μs)	1000.00μs	○
	Cyclic Transmission Time (CC IE TSN)	500.00μs	○
Multiple Period Setting	Normal-Speed	×4	○
	Low-Speed	×16	○
	Authentication Class Setting	Authentication Class B only	○
	Disconnection Detection Setting	4times	○

*1 Specify the same network No. as that of the GOT.
*2 Setting is required for connection to MELSECWinCPU (MELSEC iQ-R series).

Point

- When changing the module parameter

After writing module parameters to the PLC CPU, turn the PLC CPU OFF then back ON again, or reset the PLC CPU.

- When the GOT monitors a cyclic device of other stations

Set [Communication Mode] of the master station to [Multicast].

Network Configuration Settings

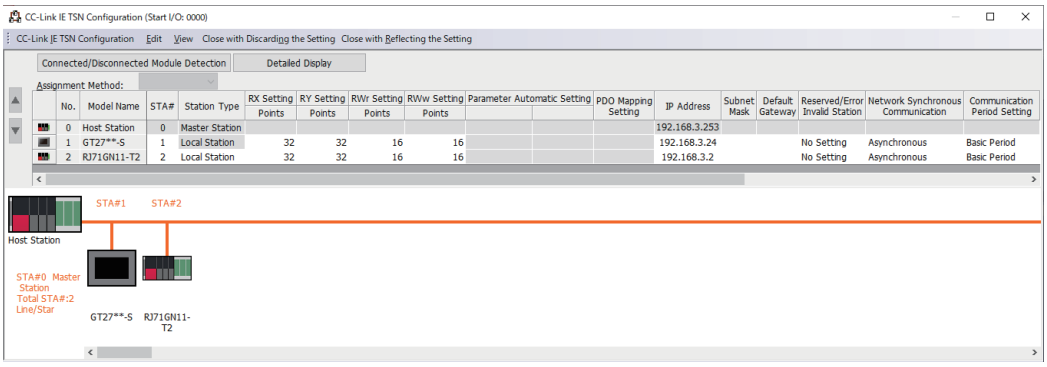

○: Necessary △: As necessary ×: Not necessary

Item		Set value	Setting necessity at GOT connection
Station No.		1	△
Station type		Local Station	△
RX Setting	Points	32	△
RY Setting	Points	32	△
RWr Setting	Points	16	△
RWw Setting	Points	16	△
IP Address		192.168.3.24	△
Reserved/Error Invalid Station		No Setting	△
Network Synchronous Communication		Asynchronous	△
Communication Period Setting		Basic Period	△

Routing setting

Up to 238 [Target Station Network No.]s can be set.

However, the same target station network number cannot be set twice or more (multiple times).

Therefore, the one that can access to other station from the request source host GOT is 238 kinds of [Target Station Network No.]s.

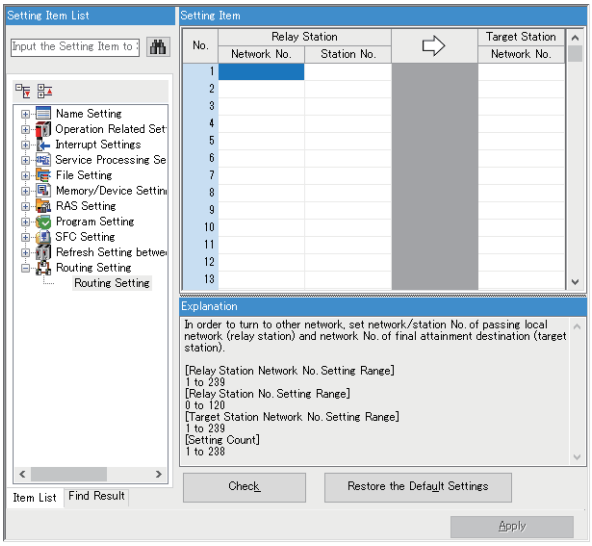

Item	Range
Target Station network No.	1 to 239
Relay Station network No.	1 to 239
Relay Station No.	0 to 120

Point

Routing parameter setting of request source

Routing parameter setting is also necessary for the request source GOT.

For the setting, refer to the following.

☞ Page 611 Routing parameter setting

[Controller Setting] in GT Designer3

Item	Set value
Network Type	CC-Link IE TSN
Network No.	1: Network No.1
Station No.	1: Station No.1
IP Address	192.168.3.24
Subnet Mask	255.255.255.0
Default Gateway	0.0.0.0
Group No.	0 (fixed)
Mode Setting	Online
Communication Speed	1Gbps (Use default value)
Refresh Interval	25ms (Use default value)
Input for Err. Sta.	Clear (Use default value)
Retry	3times (Use default value)
Timeout Time	3sec (Use default value)
Delay Time	0ms (Use default value)
Monitor Speed	High (Normal) (Use default value)

Point

[Controller Setting] in GT Designer3

For the setting method of [Controller Setting] in GT Designer3, refer to the following.

☞ Page 604 Setting communication interface (Controller Setting)

9.5 CC-Link IE TSN Communication Unit Firmware

Firmware versions and supported functions

Available functions differ depending on the firmware version of the CC-Link IE TSN communication unit.

Firmware version	Supported function
01	Cyclic transmission (line topology, star topology)
02	• Multicast mode • Communication speed 100 Mbps • Time setting function • Firmware update function
03	Ring topology
05	CC-Link IE TSN protocol version 2.0

How to check the firmware version

Check the firmware version of the communication unit by one of the following methods.

- Network status display
- Text display

Network status display

Display the [CC-Link IE TSN Network status display] screen from the network status display of the GOT and check [F/W Version].

For details on the network status display, refer to the following.

📖GOT2000 Series User's Manual (Monitor)

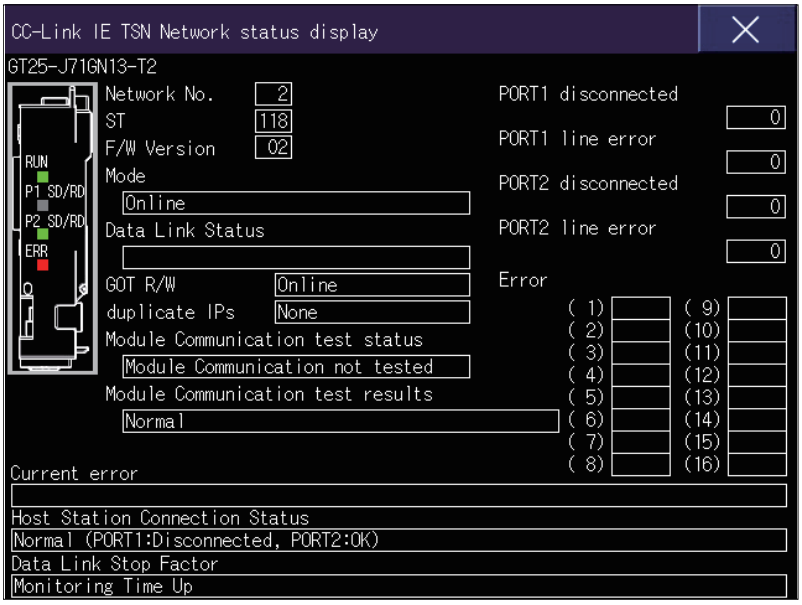

Text display

Check the firmware version in the text display on the GOT.

Set the text display as follows.

- Device: SW003D
- Display digits: 2

For details on the text display, refer to the following.

📖GT Designer3 (GOT2000) Screen Design Manual

Firmware update

Use the firmware update tool installed to a personal computer to update the firmware of the CC-Link IE TSN communication unit through a network.
The following shows how to execute firmware update.

Point

- CC-Link IE TSN firmware update tool

For details of the firmware update tool, such as the operating environment, installation procedure, and operating procedure, refer to the following.
CC-Link IE TSN Firmware Update Tool Reference Manual

- CC-Link IE TSN communication unit

For details on the CC-Link IE TSN communication unit, refer to the following.
CC-Link IE TSN Communication Unit User's Manual

Connection method

Use one of the following methods to connect the personal computer on which the firmware update tool is to run and the CC-Link IE TSN communication unit on the GOT.

■Direct connection

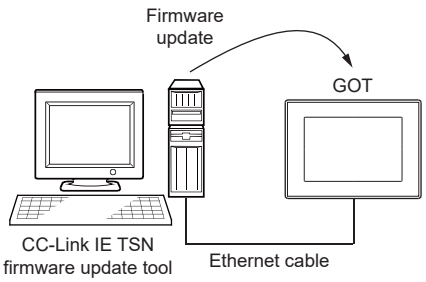

■Connection via a hub

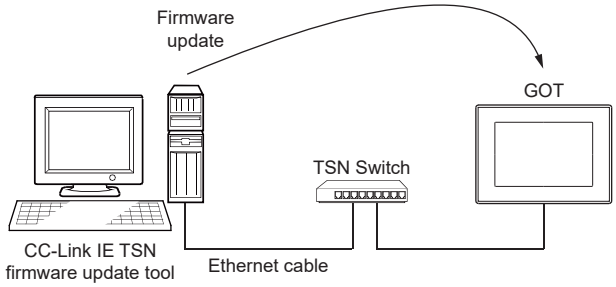

Point

For the connection via a hub, use a TSN Switch.
For details on the TSN Switch, refer to the following.
MELSEC iQ-R CC-Link IE TSN User's Manual (Startup)
MELSEC iQ-R CC-Link IE TSN Plus Master/Local Module User's Manual
MELSEC iQ-R Motion Module User's Manual (Startup)
MELSEC iQ-F FX5 User's Manual (CC-Link IE TSN)

Firmware update procedure

Update the firmware as follows.

1. Stop communication of the CC-Link IE TSN communication unit in which the firmware is updated.

Perform one of the following operations to stop communication.

- Disconnect the master station from the network.
- Disconnect the host station from the network.

2. Configure the settings required for the firmware update tool.

- Network configuration settings

Item	Setting
Module Name	GT25-J71GN13-T2
IP Address	IP address of the CC-Link IE TSN communication unit
FTP Username	GT25-J71GN13
FTP Password	GT25-J71GN13

- Application settings

Item	Setting
FTP Mode	Active Mode
Firmware Update Timeout(s)	900sec

For the settings other than the above, refer to the following.

CC-Link IE TSN Firmware Update Tool Reference Manual

3. Update the firmware of the CC-Link IE TSN communication unit.

4. After the update, the GOT on which the unit is mounted is restarted.

After the restart, the CC-Link IE TSN communication unit operates with the updated firmware.

Point

Firmware file

For the firmware file used for update, contact your local sales office.

Precautions for firmware update

The following shows the precautions for executing firmware update.

When firmware update is not performed

Make sure to stop communication of the CC-Link IE TSN communication unit, and then execute firmware update.
In the following cases, firmware update of the CC-Link IE TSN communication unit is not performed.

■While CC-Link IE TSN Control (GS620.b0) is on.

Turn off this bit.
For details on the CC-Link IE TSN Control (GS620.b0), refer to the following.
📖GT Designer3 (GOT2000) Screen Design Manual

■While the CC-Link IE TSN communication unit is communicating

Disconnect the master station or host station from the network to stop communication of the CC-Link IE TSN communication unit.

■While the GOT is being operated with GT Designer3

Do not perform operations such as writing the package data and executing the GOT diagnostics with GT Designer3.

■Performing an operation that makes the GOT offline

Do not perform any operation that makes the GOT offline in the utility.

Power-off during firmware update

Do not turn off the GOT during firmware update.
Doing so may cause the CC-Link IE TSN communication unit to become unusable.

Hardware version of the CC-Link IE TSN communication unit

Firmware update may not be available depending on the combination of the hardware and firmware versions of the CC-Link IE TSN communication unit.
If firmware update cannot be performed, check the error code of the firmware update tool.

Firmware downgrade

If the version of the firmware file used for the update tool is earlier than the firmware version of the target CC-Link IE TSN communication unit, a warning message prompting for downgrading is displayed.
Select a new firmware file to execute firmware update.
Otherwise, execute downgrading.

9.6 Precautions

Connection status check after the GOT startup

The connection with the network cannot be established until the connection check with the master station is completed after the GOT startup.
To check the status of connection with the master station, use the CC-Link IE TSN Connection Status (GS1297) of the GOT internal device.
For details on the CC-Link IE TSN Connection Status (GS1297), refer to the following.
📖GT Designer3 (GOT2000) Screen Design Manual

IP address duplication

When a local station with the CC-Link IE TSN compatible switching hub connected (linked-up) is added, IP address duplication is not detected at the station to be added.
If IP address duplication (error code 1802H) is detected, disconnect the local station from the network.
Otherwise, a transient transmission may be performed to an unintended station because multiple stations with the same IP address exist on the network.

Multiple CPU configuration

When accessing a CPU in a multiple CPU configuration via a CC-Link IE TSN network, ensure that the firmware version of the CPU is as shown below.

CPU	Firmware version
R00CPU, R01CPU, R02CPU	11 or later
R04CPU, R08CPU, R16CPU, R32CPU, R120CPU, R04ENCPU, R08ENCPU, R16ENCPU, R32ENCPU, R120ENCPU	43 or later

Ethernet connection with a CC-Link IE TSN-equipped module or Motion module

The CC-Link IE TSN communication unit (GT25-J71GN13-T2) does not support the Ethernet connection.
For the Ethernet connection, use an Ethernet communication unit (GT25-J71E71-100) or Ethernet interface built in the GOT.
For details on the Ethernet connection, refer to the following.
☞ Page 240 Connection to CC-Link IE TSN-equipped module
☞ Page 242 Connection to Motion module

GT Designer3 version and CC-Link IE TSN communication unit firmware version

The combination of the GT Designer3 version and CC-Link IE TSN communication unit (GT25-J71GN13-T2) firmware version is restricted.
The following shows the combinations of the GT Designer3 version and CC-Link IE TSN communication unit firmware version.
○: Available, ×: Not available

GT Designer3 version	CC-Link IE TSN communication unit (GT25-J71GN13-T2)	
	01	02 or later
Version1.217B to Version1. 220E	○	×
Version1.225K or later	×	○

Update the firmware of the CC-Link IE TSN communication unit (GT25-J71GN13-T2) with firmware version 01 so that the GT Designer3 version 1.225K or later supports the unit.
For firmware update of the CC-Link IE TSN communication unit (GT25-J71GN13-T2), refer to the following.
☞ Page 618 CC-Link IE TSN Communication Unit Firmware

Firmware versions of the CC-Link IE TSN-equipped module or Motion module on the master station and CC-Link IE TSN communication unit

Depending on the combination of firmware versions of each module and the unit, the GOT cannot access the network.
The following shows the module and unit firmware version combinations.
○: Accessible, ×: Inaccessible

CC-Link IE TSN-equipped module or Motion module on the master station		CC-Link IE TSN communication unit (GT25-J71GN13-T2)	
		01	02 or later
RJ71GN11-T2	03 or earlier	○	×
	04 or later	×	○
RJ71GN11-EIP	From the first version	×	○
RD78G(H)	19 or earlier	×	×
	20 or later	×	○

Update the firmware of the module or unit so that the GOT can access the network.
For firmware update of the CC-Link IE TSN-equipped module (RJ71GN11-T2, RJ71GN11-EIP) or Motion module (RD78G(H)), refer to the following.
📖MELSEC iQ-R Module Configuration Manual
📖MELSEC iQ-R CC-Link IE TSN Plus Master/Local Module User's Manual
📖MELSEC iQ-R Motion Module User's Manual (Application)
For firmware update of the CC-Link IE TSN communication unit (GT25-J71GN13-T2), refer to the following.
☞ Page 618 CC-Link IE TSN Communication Unit Firmware

When monitoring master and local stations on networks by transient transmission

For monitoring of master and local stations on the same network as the GOT by transient transmission, target stations for monitoring depend on [Communication Mode] of the CC-Link IE TSN-equipped module or Motion module.

[Communication Mode]	Availability of monitoring
[Unicast]	Master station only
[Multicast]	Master station
	Local station that satisfies the following conditions • Being set as a local station in the network configuration setting • Not being a reserved or error invalid station

For the settings of the CC-Link IE TSN-equipped module or Motion module, refer to the following.
📖MELSEC iQ-R CC-Link IE TSN User's Manual (Application)
📖MELSEC iQ-R CC-Link IE TSN Plus Master/Local Module User's Manual
📖MELSEC iQ-R Motion Module User's Manual (Network)
📖MELSEC iQ-F FX5 User's Manual (CC-Link IE TSN)
To monitor master and local stations on other networks by transient transmission, relay data through the master station or local station that can be monitored on the same network as the GOT.

Connecting one PLC with multiple GOTs

When multiple GOTs access one PLC simultaneously, writing (transient/cyclic) and reading (transient) data to/from the GOTs may slow down.
The following countermeasures can prevent this slowdown.
<Countermeasures>

■Improving the PLC's response speed

Insert a COM instruction on the PLC to increase the response speed. Note that caution is required as the scan time will increase.

■Designing screens using cyclic devices

Create screens using cyclic devices instead of transient devices.

■Splitting connection destinations of the GOTs into multiple systems

Add a master/local module to the PLC and split the connection destinations of the GOTs into multiple systems. Improve the current system configuration.

(Example of current system configuration)

In the following system configuration, the GOTs access one module.

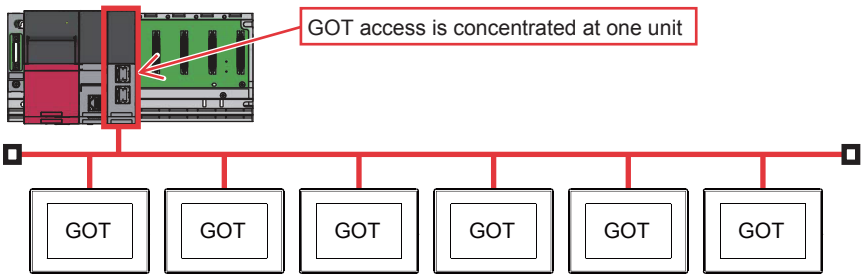

(Improvement measure)

- Adding a module to the PLC

Add a module to the PLC to disperse access destinations for the GOTs.

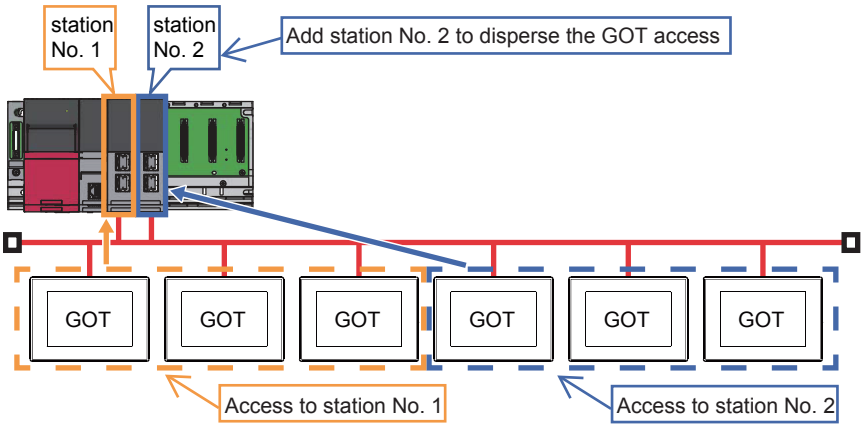

- Splitting the network

Split the network to disperse accesses from the GOTs.

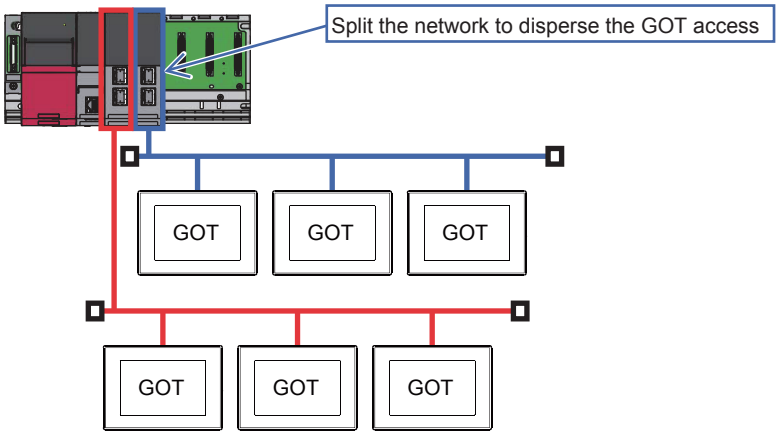

10 CC-Link IE CONTROLLER NETWORK CONNECTION

- Page 625 Connectable Model List
- Page 632 System Configuration
- Page 633 GOT side settings
- Page 640 PLC Side Setting
- Page 661 Precautions

10.1 Connectable Model List

PLC/Motion CPU

The following table shows the connectable models.

Series	Model name	Clock	Communication type	Connectable model	Refer to
MELSEC iQ-R Series	R00CPU	○	CC-Link IE Controller Network	GT27 GT25	☞ Page 632 System Configuration
	R01CPU				
	R02CPU				
	R04CPU				
	R08CPU				
	R16CPU				
	R32CPU				
	R120CPU				
	R08PCPU*1				
	R16PCPU*1				
	R32PCPU*1				
	R120PCPU*1				
	R04ENCPU				
	R08ENCPU				
	R16ENCPU				
	R32ENCPU				
	R120ENCPU				
	R08PSFCPU *2				
	R16PSFCPU *2				
	R32PSFCPU *2				
	R120PSFCPU *2				
	R08SFCPU*3				
	R16SFCPU*3				
	R32SFCPU*3				
	R120SFCPU*3				
Motion CPU (MELSEC iQ-R Series)	R16MTCPU	○	CC-Link IE Controller Network	GT27 GT25	☞ Page 632 System Configuration
	R32MTCPU				
	R64MTCPU				
C Controller module (MELSEC iQ-R Series)	R12CCPU-V	○	CC-Link IE Controller Network	GT27 GT25	☞ Page 632 System Configuration
MELSECWinCPU (MELSEC iQ-R Series)	R102WCPU-W	×	CC-Link IE Controller Network	GT27 GT25	☞ Page 632 System Configuration
CNC C80	R16NCCPU-S1	○	CC-Link IE Controller Network	GT27 GT25	☞ Page 632 System Configuration

Series	Model name	Clock	Communication type	Connectable model	Refer to
Robot controller (MELSEC iQ-R Series)	CR800-R(R16RTCPU)	○	CC-Link IE Controller Network	GT 27 GT 25	☞ Page 632 System Configuration
CC-Link IE Field Network head module	RJ72GF15-T2	×	-	-	-
MELSEC iQ-F Series	FX5U	○	-	-	-
	FX5UC				
	FX5UJ				
	FX5S				
MELSEC-Q (Q mode)	Q00JCPU	○	CC-Link IE Controller Network	GT 27 GT 25	☞ Page 632 System Configuration
	Q00CPU*4				
	Q01CPU*4				
	Q02CPU*4				
	Q02HCPU*4				
	Q06HCPU*4				
	Q12HCPU*4				
	Q25HCPU*4				
	Q02PHCPU				
	Q06PHCPU				
	Q12PHCPU				
	Q25PHCPU				
	Q12PRHCPU (Main base)				
	Q25PRHCPU (Main base)				
	Q12PRHCPU (Extension base)	○	-	-	-
	Q25PRHCPU (Extension base)				
	Q00UJCPU Q00UJCPU-S8	○	CC-Link IE Controller Network	GT 27 GT 25	☞ Page 632 System Configuration
	Q00UCPU				
	Q01UCPU				
	Q02UCPU				
	Q03UDCPU				
	Q04UDHCPU				
	Q06UDHCPU				
	Q10UDHCPU				
	Q13UDHCPU				
	Q20UDHCPU				
	Q26UDHCPU				
	Q03UDECPU				
	Q04UDEHCPU				
	Q06UDEHCPU				
	Q10UDEHCPU				
	Q13UDEHCPU				
	Q20UDEHCPU				
	Q26UDEHCPU				
	Q50UDEHCPU				
	Q100UDEHCPU				
	Q03UDVCPU Q04UDVCPU Q06UDVCPU Q13UDVCPU Q26UDVCPU	○	CC-Link IE Controller Network	GT 27 GT 25	☞ Page 632 System Configuration

Series	Model name	Clock	Communication type	Connectable model	Refer to
C Controller module (Q Series)	Q12DCCPU-V*5 Q24DHCCPU-V/VG Q24DHCCPU-LS Q26DHCCPU-LS	○	CC-Link IE Controller Network	GT 27 GT 25	☞ Page 632 System Configuration
MELSEC-QS	QS001CPU	○	CC-Link IE Controller Network	GT 27 GT 25	☞ Page 632 System Configuration
MELSEC-L	L02CPU L06CPU L26CPU L26CPU-BT L02CPU-P L06CPU-P L26CPU-P L26CPU-PBT L02SCPU L02SCPU-P	○	-	-	-
MELSEC-Q (A mode)	Q02CPU-A Q02HCPU-A Q06HCPU-A	○	-	-	-
MELSEC-QnA (QnACPU)	Q2ACPU Q2ACPU-S1 Q3ACPU Q4ACPU Q4ARCPU	○	-	-	-
MELSEC-QnA (QnASCPU)	Q2ASCPU Q2ASCPU-S1 Q2ASHCPU Q2ASHCPU-S1	○	-	-	-
MELSEC-A (AnCPU)	A2UCPU A2UCPU-S1 A3UCPU A4UCPU A2ACPU A2ACPUP21 A2ACPUR21 A2ACPU-S1 A2ACPUP21-S1 A2ACPUR21-S1 A3ACPU A3ACPUP21 A3ACPUR21 A1NCPU A1NCPUP21 A1NCPUR21 A2NCPU A2NCPUP21	○	-	-	-
	A2NCPUP21	○	-	-	
	A2NCPUR21				
	A2NCPU-S1				
	A2NCPUP21-S1				
	A2NCPUR21-S1				
	A3NCPU				
	A3NCPUP21				
	A3NCPUR21				

Series	Model name	Clock	Communication type	Connectable model	Refer to
MELSEC-A (AnSCPU)	A2USCPU	○	-	-	-
	A2USCPU-S1				
	A2USHCPU-S1				
	A1SCPU				
	A1SCPUC24-R2				
	A1SHCPU				
	A2SCPU				
	A2SCPU-S1				
	A2SHCPU				
	A2SHCPU-S1				
	A1SJCPU				
	A1SJCPU-S3				
	A1SJHCPU				
MELSEC-A	A0J2HCPU	×	-	-	-
	A0J2HCPUP21				
	A0J2HCPUR21				
	A0J2HCPU-DC24				
	A2CCPU	○	-	-	-
	A2CCPUP21				
	A2CCPUR21				
	A2CCPUC24				
	A2CCPUC24-PRF				
	A2CJCPU-S3				
	A1FXCPU				
Motion CPU (Q Series)	Q172CPU	○	-	-	-
	Q173CPU				
	Q172CPUN				
	Q173CPUN				
	Q172HCPU				
	Q173HCPU				
	Q172DCPU	○	CC-Link IE Controller Network	GT 27 GT 25	☞ Page 632 System Configuration
	Q173DCPU				
	Q172DCPU-S1				
	Q173DCPU-S1				
	Q172DSCPU				
	Q173DSCPU				
	Q170MCPU[*6]				
	Q170MSCPU[*7]				
	Q170MSCPU-S1[*7]				
	MR-MQ100	○	-	-	-

Series	Model name	Clock	Communication type	Connectable model	Refer to
Motion CPU (A Series)	A273UCPU	○	-	-	-
	A273UHCPU				
	A273UHCPU-S3				
	A373UCPU				
	A373UCPU-S3				
	A171SCPU				
	A171SCPU-S3				
	A171SCPU-S3N				
	A171SHCPU				
	A171SHCPUN				
	A172SHCPU				
	A172SHCPUN				
	A173UHCPU				
	A173UHCPU-S1				
MELSEC-WS	WS0-CPU0	×	×	-	-
	WS0-CPU1				
	WS0-CPU3				
MELSECNET/H Remote I/O station	QJ72LP25-25	×	-	-	-
	QJ72LP25G				
	QJ72BR15				
CC-Link IE Field Network head module	LJ72GF15-T2	×	-	-	-
CC-Link IE Field Network Ethernet adapter module	NZ2GF-ETB	×	-	-	-
CNC C70	Q173NCCPU	○	CC-Link IE Controller Network	GT27 GT25	☞ Page 632 System Configuration
Robot controller (Q Series)	CRnQ-700 (Q172DRCPU) CR750-Q (Q172DRCPU) CR751-Q (Q172DRCPU) CR800-Q (Q172DSRCPU)	○	CC-Link IE Controller Network	GT27 GT25	☞ Page 632 System Configuration
MELSEC-FX	FX0	×	-	-	-
	FX0S				
	FX0N				
	FX1				
	FX2	×			
	FX2C				
	FX1S	○			
	FX1N				
	FX2N				
	FX1NC				
	FX2NC	×			
	FX3S	○			
	FX3G				
	FX3GC				
	FX3GE				
	FX3U				
	FX3UC				

*1 Mount a redundant function module R6RFM next to the RnPCPU on the base unit when building a redundant system.
*2 Mount the SIL2 function module R6PSFM and redundant function module R6RFM next to the RnPSFCPU on the base unit.
*3 Mount a safety function module R6SFM next to the RnSFCPU on the base unit.
The RnSFCPU and the safety function module R6SFM must have the same pair version.
If their pair versions differ, the RnSFCPU does not operate.
*4 When in multiple CPU system configuration, use CPU function version B or later.
*5 Use a module with the upper five digits later than 12042.
*6 Only the first step can be used on the extension base unit (Q52B/Q55B).
*7 The extension base unit (Q5□B/Q6□B) can be used.

CC-Link IE Controller Network communication unit

CPU series	CC-Link IE Controller Network communication unit
MELSEC iQ-R Series Motion CPU (MELSEC iQ-R Series) C Controller module (MELSEC iQ-R Series) MELSECWinCPU (MELSEC iQ-R Series) CNC C80 CR800-R(R16RTCPU)	RJ71GP21-SX*2
MELSEC-Q (Q mode) C Controller module (Q Series) MELSEC-QS Motion CPU (Q Series) CNC C70 Robot controller (CRnQ-700) CR800-Q (Q172DSRCPU)	QJ71GP21-SX*1 QJ71GP21S-SX*1

*1 When the CC-Link IE Controller Network is in the extended mode, use a unit with the upper five digits of the serial No. 12052 or later.
*2 Use firmware version 12 or higher when building a redundant system.

10.2 System Configuration

Connection to optical loop system

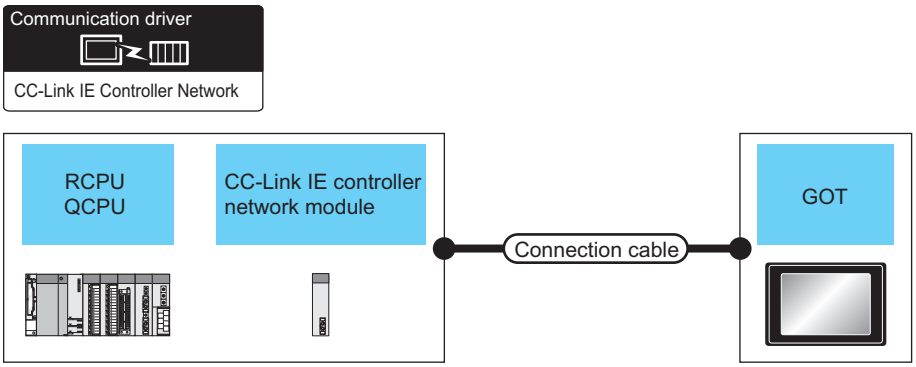

PLC			Connection cable		GOT		Number of connectable equipment
Model name[*5]	**CC-Link IE controller network communication unit**[*1]	**Communication type**	**Cable model**	**Max. distance**	**Option device**[*7]	**Model**	
MELSEC iQ-R Series Motion CPU (MELSEC iQ-R Series) C Controller module (MELSEC iQ-R Series) MELSECWinCPU (MELSEC iQ-R Series) CNC C80 CR800-R (R16RTCPU)	RJ71GP21-SX	CC-Link IE	Optical fiber cable [*2]	*3	GT15-J71GP23-SX[*6]	GT27 GT25	119 GOTs[*4]
MELSEC-Q Motion CPU (Q Series) C Controller module (Q Series) MELSEC-QS CNC C70 CR800-Q (Q172DSRCPU)	QJ71GP21-SX QJ71GP21S-SX						

*1 When the CC-Link IE Controller Network is in the extended mode, use a unit with the upper five digits of the serial No. 12052 or later.
For the system configuration on the CC-Link IE Controller Network module side, refer to the following manual.
CC-Link IE Controller Network Reference Manual

*2 For the optical fiber cable, refer to the following manual.
CC-Link IE Controller Network Reference Manual

*3 The overall extension cable length and the length between stations vary depending on the cable type to be used and the total number of stations.
For details, refer to the following manual.
CC-Link IE Controller Network Reference Manual

*4 When Universal model QCPUs is a control station, up to 119 GOTs can be connected.
When a QCPU other than Universal model QCPU is the control station, the number of connectable GOTs is 63 units (at most).
Basic model QCPU and the QSCPU cannot be used as the control station.

*5 When the CC-Link IE Controller Network is in the extended mode, only MELSEC-Q series Universal model QCPU can be used.

*6 When the CC-Link IE Controller Network is in the extended mode, use a module with the serial No. 02910908******* or later.

*7 GT25-W and GT2505-V do not support option devices.

10.3 GOT side settings

Setting communication interface (Controller Setting)

Set the channel of connecting equipment.

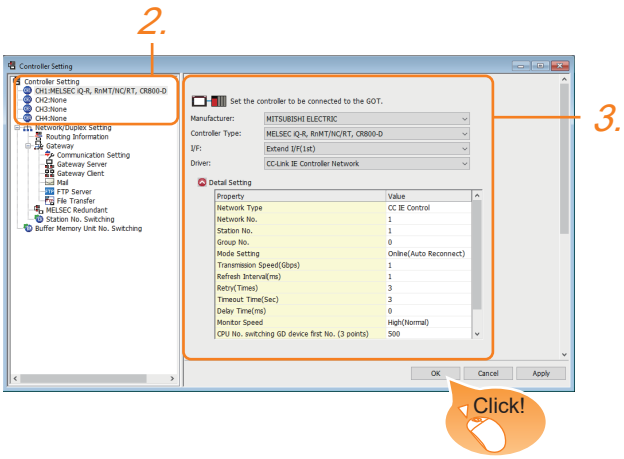

1. Select [Common] → [Controller Setting] from the menu.

2. In the [Controller Setting] window, select the channel No. to be used from the list menu.

3. Set the following items.

- [Manufacturer]: [MITSUBISHI ELECTRIC]
- [Controller Type]: Configure the setting according to the controller to be connected.
- [I/F]: Interface to be used
- [Driver]: [CC-Link IE Controller Network]
- [Detail Setting]: Configure the settings according to the usage environment.

☞ Page 634 Communication detail settings

4. When you have completed the settings, click the [OK] button.

Point

The settings of connecting equipment can be confirmed in [I/F Communication Setting].
For details, refer to the following.
☞ Page 54 I/F communication setting

Communication detail settings

Make the settings according to the usage environment.

Property	Value
Network Type	CC IE Control
Network No.	1
Station No.	1
Group No.	0
Mode Setting	Online(Auto Reconnect)
Transmission Speed(Gbps)	1
Refresh Interval(ms)	1
Retry(Times)	3
Timeout Time(Sec)	3
Delay Time(ms)	0
Monitor Speed	High(Normal)
CPU No. switching GD device first No. (3 points)	500
Module No. switching GD device first No. (16 points	550
Servo axis switching GD device first No. (16 points)	10

Item	Description	Range
Network Type*4	Set the network Type. (Default: CC IE Control)	• CC IE Control • CC IE Control extended mode
Network No.	Set the network No. (Default: 1)	1 to 239
Station No.	Set the station No. of the GOT. (Default: 1)	1 to 120
Group No.	-	0 (fixed)
Mode Setting	Set the operation mode of the GOT. (Default: Online (Auto Reconnect))	• Online (auto. reconnection) • Offline • Test station*1 • Self-loopback test*1 • Internal self-loopback test*1 • Line test*1 • H/W test*1
Transmission Speed	-	1 Gbps (fixed)
Refresh Interval	Set the number of refreshes to secure the send/receive data in station units during communication. (Default: 1ms) Valid when [Block data assurance per station is available.] is checked by the control station side network parameters of the CC-Link IE Controller Network.	1 to 1000ms
Retry	Set the number of retries to be performed when a communication timeout occurs. When no response is received after retries, a communication times out. (Default: 3times)	0 to 5times
Timeout Time	Set the time period for a communication to time out. (Default: 3sec)	1 to 90sec
Delay Time	Set the delay time for reducing the load of the network/destination PLC. (Default: 0ms)	0 to 300ms
Monitor Speed*5	Set the monitor speed for the CC-Link IE controller network. This setting is not valid in all systems. (Default: High)	High(Normal)*2/Middle/Low*3
CPU No. switching GD device first No. (3 points)	Set the start device number of the GD devices for CPU No. switching. (Default: 500) For the details, refer to the following. ☞ Page 636 Start device number of the GD devices for CPU number switching	0 to 65520
Module No. switching GD device first No. (16 points)	Set the start device number of the GD devices for module No. switching. (Default: 550) For the details, refer to the following. ☞ Page 637 Start device number of the GD devices for module number switching	0 to 65520
Servo axis switching GD device first No. (16 points)	Set the servo axis switching GD device first No. (Default: 10) For the details, refer to the following. ☞ Page 638 Servo axis switching GD device first No.	0 to 65520

*1 For details, refer to the following manual.
📖CC-Link IE Controller Network Reference Manual

*2 This range is effective when collecting a large amount of data (such as logging and recipe function) on other than the monitor screen. However, the range may affect the sequence scan time when connecting to Q00UJ/Q00U/Q01U/Q02UCPU or Q00J/Q00/Q01CPU. If you want to avoid the influence on the sequence scan time, do not set [High(Normal)]. (This setting hardly affects QCPUs other than the above.)

*3 Set this item if you want to avoid the influence on the sequence scan time further than the [Middle] setting when connecting to Q00UJ/Q00U/Q01U/Q02UCPU or Q00J/Q00/Q01CPU. However, the monitor speed may be reduced.

*4 When the CC-Link IE Controller Network is in the extended mode, set to [CC IE Control extended mode]. The extended mode can be used in GT Designer3 version 1.22Y or later.

*5 When using a global label, to read or write more than 235 two-byte characters, set the [Monitor speed] to [High (Standard)] or [Middle]. If [Monitor speed] is set to [Low], a system error occurs when reading or writing. For details, refer to the following manual.
📖GT Designer3 (GOT2000) Screen Design Manual

Point

• Switch setting example

For the switch setting example, refer to the following.

☞ Page 640 PLC Side Setting

• Communication interface setting by Utility

The communication interface setting can be changed on the Utility's [Communication Settings] after writing [Controller Setting] of project data.

For details on the Utility, refer to the following manual.

📖GOT2000 Series User's Manual (Utility)

• Precedence in communication settings

When settings are made by GT Designer3 or the Utility, the latest setting is effective.

• Network type

Be sure to set the same network types for the CPU side and the GOT side. If the net work types of the CPU side and the GOT side are different, an error is displayed in the system alarm of the GOT side.

Start device number of the GD devices for CPU number switching

■Specifying a CPU number with a device

[CPU No.] can be specified with the GOT internal registers (GD devices) by specifying a value (100 to 102) to [CPU No.] in the device setting dialog in GT Designer3.

Set the start device number of the GD devices to be used in [CPU No. switching GD device first No. (3 points)].

Specify [CPU No.] with the three consecutive GD devices, starting the set device number.

When [500] is set to [CPU No. switching GD device first No. (3 points)], GD500 to GD502 are used to specify [CPU No.] as shown in the following table.

CPU No.	GD device	Setting range
100	GD500	1 to 4 Setting an invalid value causes a communication timeout error. Specifying a nonexistent CPU No. or a CPU No. not supporting a multiple CPU system with a device causes a controller error.
101	GD501	
102	GD502	

■Specifying a CPU number with a device on the initially-displayed screen

Set [CPU No. switching GD device first No. (3 points)] so that the values of the GD devices are retained and monitored upon the GOT startup.

■Specifying a CPU number with a device in a multi-channel connection

If the setting range of [CPU No. switching GD device first No. (3 points)] set in each channel overlaps, the monitoring target CPU No. set to each channel is switched simultaneously.

Set [CPU No. switching GD device first No. (3 points)] in each channel so that the setting range does not overlap.

■Specifying a CPU number and a station number with devices in a multi-channel connection

When GD10 to GD25 are used to specify the station No. of an inverter or non-Mitsubishi temperature controller connected, setting [10] to [CPU No. switching GD device first No. (3 points)] in a different channel switches the monitoring target CPU No. and station No. of an inverter or non-Mitsubishi temperature controller set to each channel simultaneously.

Set [CPU No. switching GD device first No. (3 points)] so that the setting range does not overlap the station No. of an inverter or non-Mitsubishi temperature controller.

Start device number of the GD devices for module number switching

■Specifying a module number with a device

In a connection via a simple motion module, [Unit No.] can be specified with the GOT internal registers (GD devices) by specifying a value (100 to 10F) to [Unit No.] in the device setting dialog in GT Designer3.
Set the start device number of the GD devices to be used in [Module No. switching GD device first No. (16 points)].
Specify [Unit No.] with the 16 consecutive GD devices, starting the set device number.
When [550] is set to [Module No. switching GD device first No. (16 points)], GD550 to GD565 are used to specify [Unit No.] as shown in the following table.

Unit No.	GD device	Setting range
100	GD550	The setting range depends on [Unit Type]. • When [MELSEC iQ-R, RnMT/NC/RT, CR800-D], [MELSEC iQ-R, RnMT/RT, CR800-D], [MELSEC-Q/QS, Q17nD/M/NC/DR/DSR, CRnD-700], [MELSEC-Q, Q17nD/M/DR/DSR, CRnD-700], [MELSEC-L] or [MELIPC] is selected for [Unit Type] 00 to FF • When [MELSEC iQ-F] is selected for [Unit Type] 01 to 10 Setting an invalid value causes a device range error.
101	GD551	
102	GD552	
103	GD553	
104	GD554	
105	GD555	
106	GD556	
107	GD557	
108	GD558	
109	GD559	
10A	GD560	
10B	GD561	
10C	GD562	
10D	GD563	
10E	GD564	
10F	GD565	

■Specifying a module number with a device on the initially-displayed screen

Set [Module No. switching GD device first No. (16 points)] so that the values of the GD devices are retained and monitored upon the GOT startup.

■Specifying a module number with a device in a multi-channel connection

If the setting range of [Module No. switching GD device first No. (16 points)] set in each channel overlaps, the module No. of the simple motion module via the servo amplifier device of each channel is switched simultaneously.
Set [Module No. switching GD device first No. (16 points)] for each channel so that the setting range does not overlap.

■Specifying a station number and a module number with devices in a multi-channel connection

When GD10 to GD25 are used to specify the station No. of an inverter or non-Mitsubishi temperature controller connected, setting [10] to [Module No. switching GD device first No. (16 points)] switches the module No. of the simple motion module via the servo amplifier device and the station No. of an inverter or non-Mitsubishi temperature controller set to each channel simultaneously.
Set [Module No. switching GD device first No. (16 points)] so that the setting range does not overlap the station No. of an inverter or non-Mitsubishi temperature controller.

Servo axis switching GD device first No.

■Indirect specification of the servo axis No.

In a connection via a motion CPU or simple motion module, a servo axis No. can be specified with the GOT internal registers (GD devices) by specifying a value (100 to 115) to the axis No. of the servo amplifier device.
Set the start device number of the GD devices to be used in [Servo axis switching GD device first No. (16 points)].
Specify a servo axis number with 16 consecutive GD devices, starting the set device number.
When [10] is set to [Servo axis switching GD device first No. (16 points)], GD10 to GD25 are used to specify a servo axis number as shown in the following table.

Servo axis No.	GD device	Setting range
100	GD10	1 to 64 Setting an invalid value causes a device range error.
101	GD11	
102	GD12	
103	GD13	
104	GD14	
105	GD15	
106	GD16	
107	GD17	
108	GD18	
109	GD19	
110	GD20	
111	GD21	
112	GD22	
113	GD23	
114	GD24	
115	GD25	

■Specifying a servo axis number with a device on the initially-displayed screen

Set [Servo axis switching GD device first No. (16 points)] so that the values of the GD devices are retained and monitored upon the GOT startup.

■Specifying a servo axis number with a device in a multi-channel connection

If the setting rage of [Servo axis switching GD device first No. (16 points)] set in each channel overlaps, the axis No. of the servo amplifier of each channel is switched simultaneously.
Set [Servo axis switching GD device first No. (16 points)] for each channel so that the setting range does not overlap.

■Specifying a station number and a servo axis number with devices in a multi-channel connection

When GD10 to GD25 are used to specify the station No. of an inverter or non-Mitsubishi temperature controller connected, setting [10] to [Servo axis switching GD device first No. (16 points)] switches the axis No. of the servo amplifier and the station No. of an inverter or non-Mitsubishi temperature controller set to each channel simultaneously.
Set [Servo axis switching GD device first No. (16 points)] so that the setting range does not overlap the station No. of an inverter or non-Mitsubishi temperature controller.

Routing parameter setting

Up to 64 [Transfer Network No.]s can be set.
However, the same transfer network number cannot be set twice or more (multiple times).
Therefore, the one that can access to other station from the request source host GOT is 64 kinds of [Transfer Network No.]s.

Point

Routing parameter setting
When communicating within the host network, routing parameter setting is unnecessary.
For details of routing parameters, refer to the following manual.
MELSEC iQ-R CPU Module User's Manual (Application)
MELSEC-Q CC-Link IE Controller Network Reference Manual

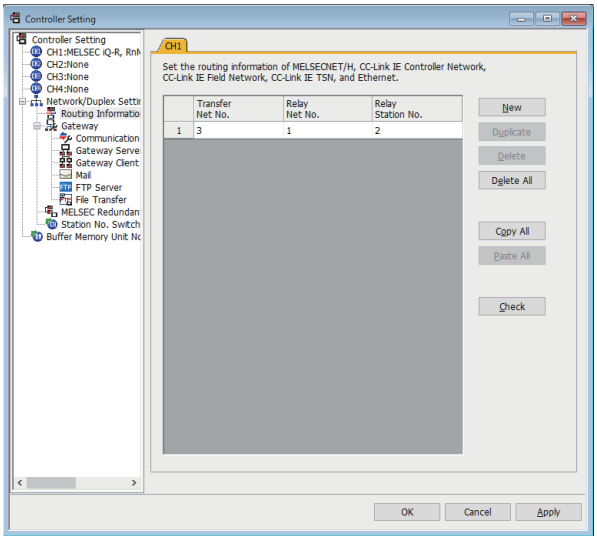

Item		Range
Transfer Network No.		1 to 239
Relay Network No.		1 to 239
Relay Station No.	RCPU, Universal model QCPU	0 to 120
	QCPU other than Universal model QCPU*1	0 to 64

*1 Basic model QCPU and the QSCPU are not included.

Point

• Routing parameter setting of relay station
Routing parameter setting is also necessary for the relay station.
For the setting, refer to the following.
☞ Page 640 PLC Side Setting
• Parameter reflection function of MELSOFT Navigator
The color of the cells for the items which are reflected to GT Designer3 from MELSOFT Navigator changes to green. Set items, which are displayed in green cells, from the MELSOFT Navigator.
When the settings of Transfer network No., Relay network No. or Relay station No. are reflected to the parameter from the MELSOFT Navigator, those settings are added. Items set in advance are not deleted.However, if the target network No. overlaps, the item set in advance is overwritten.
The routing information is used manually by the user when the data is created. Therefore, after changing the network configuration by MELSOFT Navigator, create a routing information again. For details of the creation of the routing information, refer to the MELSOFT Navigator help.

10.4 PLC Side Setting

This section describes the settings of the GOT and CC-Link IE controller network module in the following case of system configuration.

Point

- CC-Link IE Controller Network module

For details of the CC-Link IE Controller Network module, refer to the following manual.

CC-Link IE Controller Network Reference Manual

- Checking Data-Link status

Refer to the followings.

Page 92 Access Range for Monitoring Stations on Network Systems

Connection to MELSEC iQ-R series

System configuration1 (Network Type: CC IE Control)

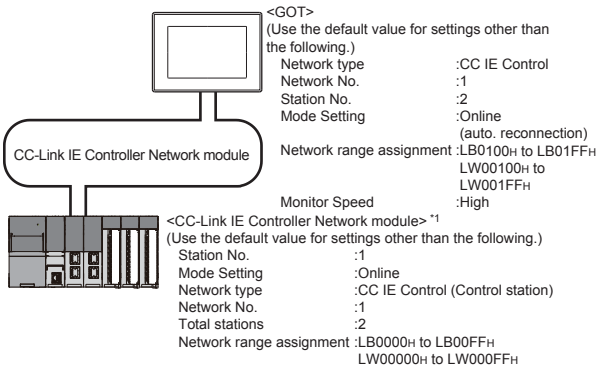

*1 The CC-Link IE Controller Network module is mounted on slot 0 of the base unit.
The start I/O No. of the CC-Link IE Controller Network module is set at [0].

System configuration1 (Network Type: CC IE Control extended mode)

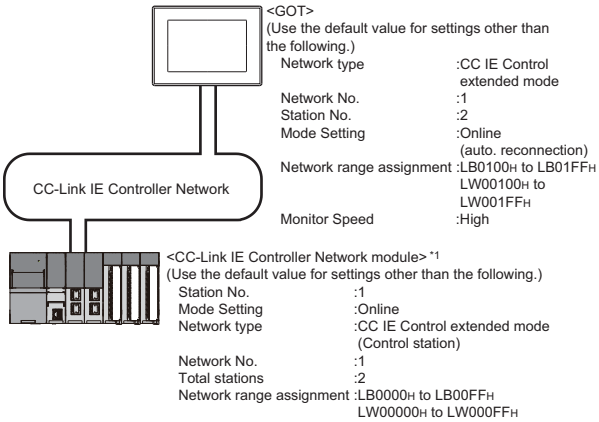

*1 The CC-Link IE Controller Network module is mounted on slot 0 of the base unit.
The start I/O No. of the CC-Link IE Controller Network module is set at [0].

Parameter settings (Connecting to MELSEC iQ-R series) of System configuration1 (Network Type: CC IE Control)

■[Module parameter] of GX Works3

- Module parameter

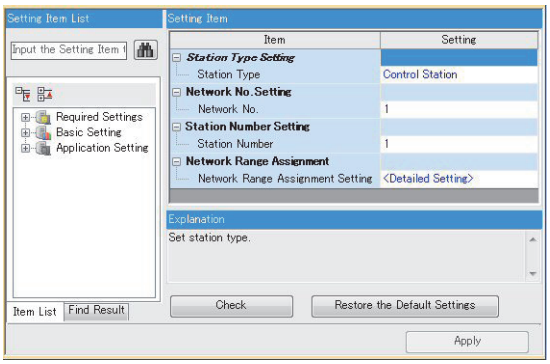

Item	Set value	Setting necessity at GOT connection
Station type	Control station (fixed)	○
Network No.*1	1	○
Station number setting	1	○
Network range assignment	☞ • Network range assignment	△

○: Necessary △: As necessary ×: Not necessary

*1 Specify the same network No. as that of the GOT.

- Network range assignment

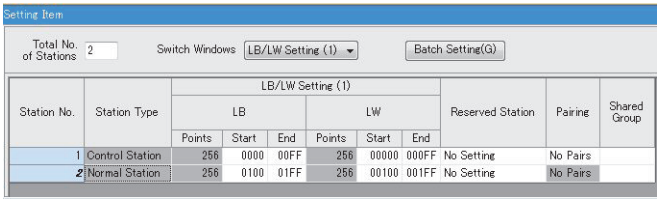

Item				Set value	Setting necessity at GOT connection
LB/LW setting (1)*1	LB	Station No.1	Start	0000H	△
			End	00FFH	△
		Station No.2	Start	0100H	△
			End	01FFH	△
	LW	Station No.1	Start	00000H	△
			End	000FFH	△
		Station No.2	Start	00100H	△
			End	001FFH	△
LB/LW setting (2)*1				No setting	△
LX/LY setting (1)*1				No setting	△
LX/LY setting (2)*1				No setting	△
Reserved station				(Use default value)	△
Pairing					△

○: Necessary △: As necessary ×: Not necessary

*1 Be sure to set it to perform the cyclic transmission.

Point

When changing the module parameter

After writing module parameters to the PLC CPU, turn the PLC CPU OFF then back ON again, or reset the PLC CPU.

• Routing setting

Up to 238 network numbers can be set for [Target Station Network No.].

However, the same number cannot be set twice or more (multiple times).

The GOT (host station) can access 238 different networks specified under [Target Station Network No.].

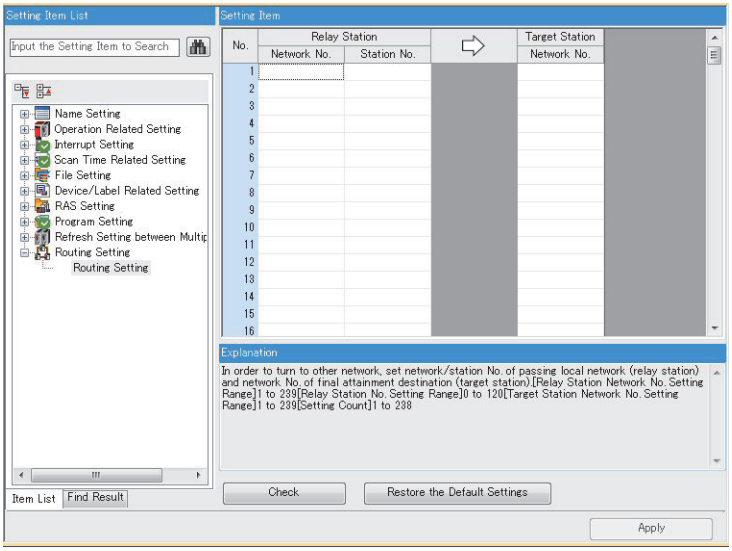

Item	Range
Target Station network No.	1 to 239
Relay Station network No.	1 to 239
Relay station No.	0 to 120

Point

Routing parameter setting of request source

Routing parameter setting is also necessary for the request source GOT.

For the setting, refer to the following.

☞ Page 639 Routing parameter setting

GT Designer3 [Communication settings] on System configuration1 (Network Type: CC IE Control)

Item	Set value
Network Type	CC IE Control
Network No.	1: Network No.1
Station No.	2: Station No.2
Group No.	0 (fixed)
Mode Setting	Online (auto. reconnection)
Transmission Speed	1Gbps (fixed)
Refresh Interval	1ms (Use default value)
Retry	3times (Use default value)
Timeout Time	3sec (Use default value)
Delay Time	0ms (Use default value)
Monitor Speed	High (Normal) (Use default value)

Point

[Controller Setting] of GT Designer3

For the setting method of [Controller Setting] of GT Designer3, refer to the following.

☞ Page 633 Setting communication interface (Controller Setting)

Module parameter settings of System configuration2 (Network Type: Extended mode)

■[Module parameter] of GX Works3

- Module parameter

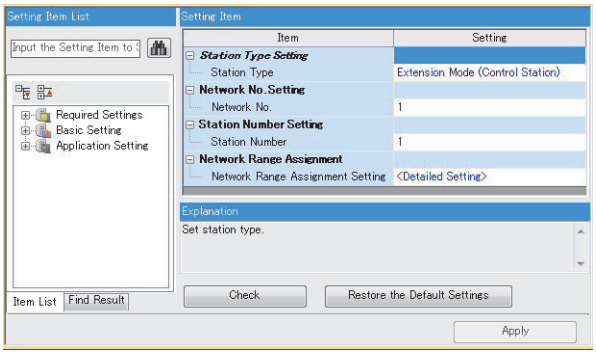

Item	Set value	Setting necessity at GOT connection
Station type	CC IE Control (Control station)	○
Network No.*1	1	○
Station number setting	1	○
Network range assignment	☞ • Network range assignment	△

○: Necessary △: As necessary ×: Not necessary

- Network range assignment

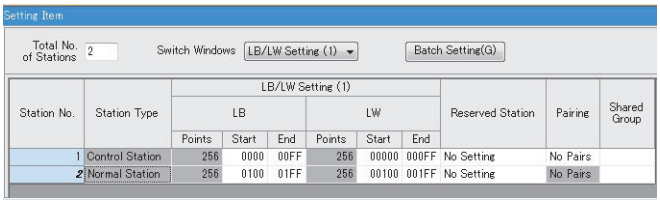

Item				Set value	Setting necessity at GOT connection
B/LW setting (1)*1	LB	Station No.1	Start	0000H	△
			End	00FFH	△
		Station No.2	Start	0100H	△
			End	01FFH	△
	LW	Station No.1	Start	00000H	△
			End	000FFH	△
		Station No.2	Start	00100H	△
			End	001FFH	△
LB/LW setting (2)*1				No setting	△
LX/LY setting (1)*1				No setting	△
LX/LY setting (2)*1				No setting	△
Reserved station				(Use default value)	△
Pairing					△

○: Necessary △: As necessary ×: Not necessary

*1 Be sure to set it to perform the cyclic transmission.

• Routing setting

Up to 238 [Target Station Network No.]s can be set.

However, the same target station network number cannot be set twice or more (multiple times).

Therefore, the one that can access to other station from the request source host GOT is 238 kinds of [Target Station Network No.]s.

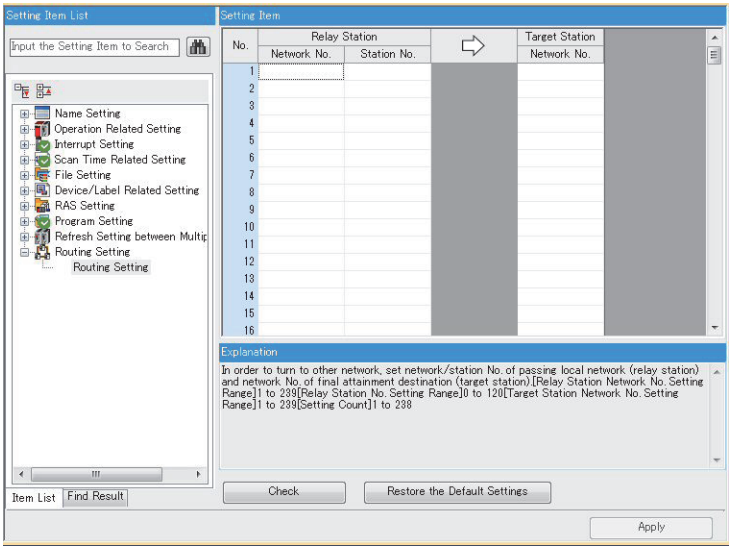

Item	Range
Target Station network No.	1 to 239
Relay Station network No.	1 to 239
Relay station No.	0 to 120

Point

Routing parameter setting of request source

Routing parameter setting is also necessary for the request source GOT.

For the setting, refer to the following.

☞ Page 639 Routing parameter setting

■[Controller Setting] of GT Designer3

Item	Set value
Network type	CC IE Control extended mode
Network No.	1: Network No.1
Station No.	2: Station No.2
Group No.	0 (fixed)
Mode	Online (auto. reconnection)
Refresh Interval	1ms (Use default value)
Retry	3times (Use default value)
Timeout Time	3sec (Use default value)
Delay Time	0ms (Use default value)
Monitor Speed	High (Normal) (Use default value)

Point

Network type of the GOT side

When the network is in the extended mode, be sure to set the network type of the GOT side to [CC IE Control extended mode].

For [Controller Setting], of GT Designer3, refer to the following.

☞ Page 633 Setting communication interface (Controller Setting)

Connection to C Controller / MELSECWinCPU module (MELSEC iQ-R Series)

This section describes the settings of the GOT and C Controller / MELSECWinCPU module (MELSEC iQ-R Series) in the following system configuration.
Use CW Configurator for the C Controller / MELSECWinCPU module (MELSEC iQ-R Series) communication settings.

System configuration1 (Network Type: CC IE Control)

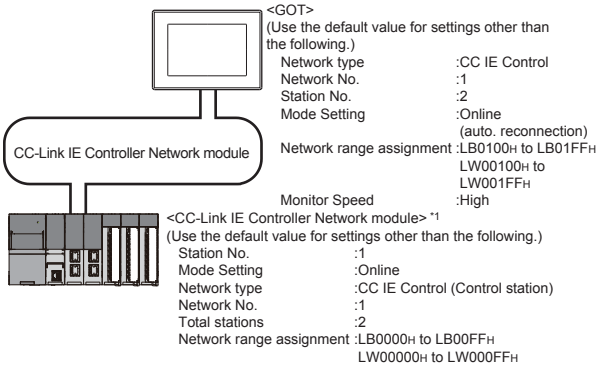

*1 The CC-Link IE Controller Network module is mounted on slot 0 of the base unit.
The start I/O No. of the CC-Link IE Controller Network module is set at [0].

System configuration1 (Network Type: CC IE Control extended mode)

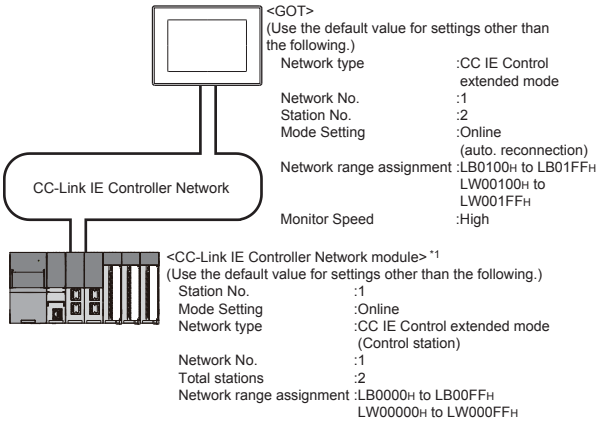

*1 The CC-Link IE Controller Network module is mounted on slot 0 of the base unit.
The start I/O No. of the CC-Link IE Controller Network module is set at [0].

Parameter settings (Connecting to MELSEC iQ-R series) of System configuration1 (Network Type: CC IE Control)

■[Module parameter] of CW Configurator

- Module parameter

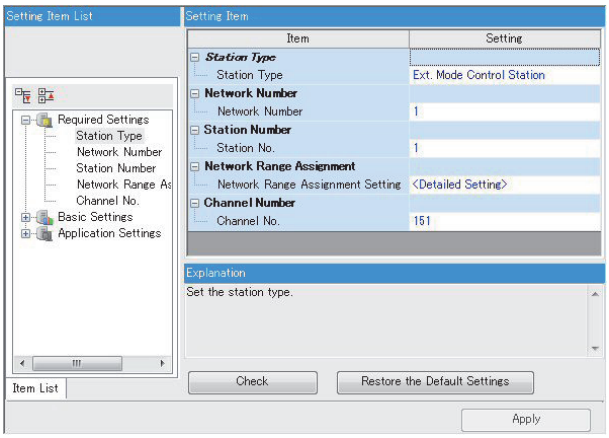

Item	Set value	Setting necessity at GOT connection
Station type	Control station (fixed)	○
Network No.*1	1	○
Station number setting	1	○
Network range assignment	☞ • Network range assignment	△
Channel No.	(Use default value)	×

○: Necessary △: As necessary ×: Not necessary

*1 Specify the same network No. as that of the GOT.

- Network range assignment

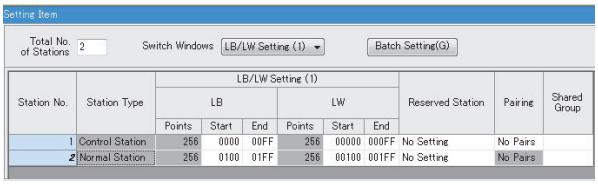

Item				Set value	Setting necessity at GOT connection
LB/LW setting (1)*1	LB	Station No.1	Start	0000H	△
			End	00FFH	△
		Station No.2	Start	0100H	△
			End	01FFH	△
	LW	Station No.1	Start	00000H	△
			End	000FFH	△
		Station No.2	Start	00100H	△
			End	001FFH	△
LB/LW setting (2)*1				No setting	△
LX/LY setting (1)*1				No setting	△
LX/LY setting (2)*1				No setting	△
Reserved station				(Use default value)	△
Pairing					△

○: Necessary △: As necessary ×: Not necessary

*1 Be sure to set it to perform the cyclic transmission.

Point

When changing the module parameter

After writing module parameters to the PLC CPU, turn the PLC CPU OFF then back ON again, or reset the PLC CPU.

• Routing setting

Up to 238 network numbers can be set for [Target Station Network No.].

However, the same number cannot be set twice or more (multiple times).

The GOT (host station) can access 238 different networks specified under [Target Station Network No.].

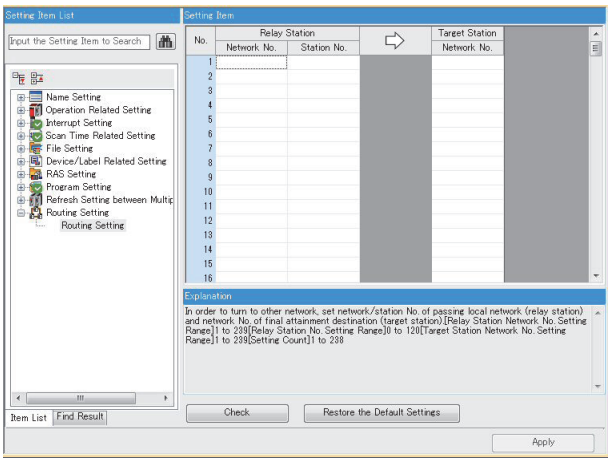

Item	Range
Target Station network No.	1 to 239
Relay Station network No.	1 to 239
Relay station No.	0 to 120

Point

Routing parameter setting of request source

Routing parameter setting is also necessary for the request source GOT.

For the setting, refer to the following.

☞ Page 639 Routing parameter setting

GT Designer3 [Communication settings] on System configuration1 (Network Type: CC IE Control)

Item	Set value
Network Type	CC IE Control
Network No.	1: Network No.1
Station No.	2: Station No.2
Group No.	0 (fixed)
Mode Setting	Online (auto. reconnection)
Transmission Speed	1Gbps (fixed)
Refresh Interval	1ms (Use default value)
Retry	3times (Use default value)
Timeout Time	3sec (Use default value)
Delay Time	0ms (Use default value)
Monitor Speed	High (Normal) (Use default value)

Point

[Controller Setting] of GT Designer3

For the setting method of [Controller Setting] of GT Designer3, refer to the following.

☞ Page 633 Setting communication interface (Controller Setting)

Module parameter settings of System configuration2 (Network Type: Extended mode)

■[Module parameter] of CW Configurator

- Module parameter

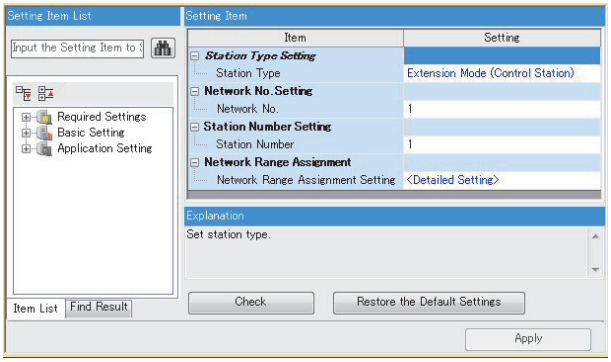

Item	Set value	Setting necessity at GOT connection
Station type	CC IE Control (Control station)	○
Network No.*1	1	○
Station number setting	1	○
Network range assignment	☞ • Network range assignment	△

○: Necessary △: As necessary ×: Not necessary

- Network range assignment

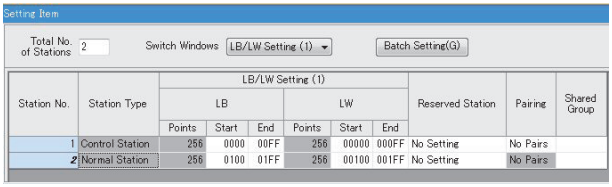

Item				Set value	Setting necessity at GOT connection
B/LW setting (1)*1	LB	Station No.1	Start	0000H	△
			End	00FFH	△
		Station No.2	Start	0100H	△
			End	01FFH	△
	LW	Station No.1	Start	00000H	△
			End	000FFH	△
		Station No.2	Start	00100H	△
			End	001FFH	△
LB/LW setting (2)*1				No setting	△
LX/LY setting (1)*1				No setting	△
LX/LY setting (2)*1				No setting	△
Reserved station				(Use default value)	△
Pairing					△

○: Necessary △: As necessary ×: Not necessary

*1 Be sure to set it to perform the cyclic transmission.

• Routing setting

Up to 238 [Target Station Network No.]s can be set.

However, the same target station network number cannot be set twice or more (multiple times).

Therefore, the one that can access to other station from the request source host GOT is 238 kinds of [Target Station Network No.]s.

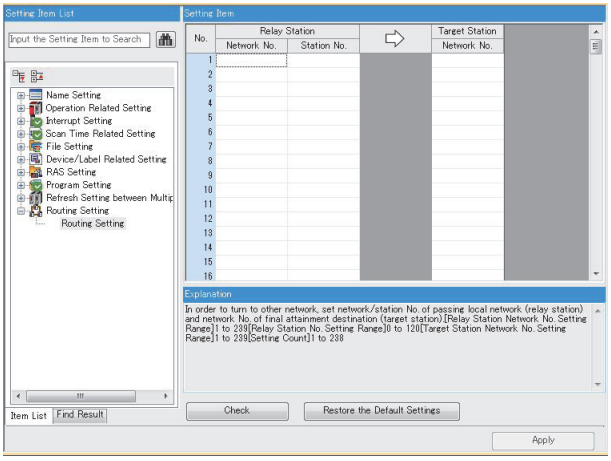

Item	Range
Target Station network No.	1 to 239
Relay Station network No.	1 to 239
Relay station No.	0 to 120

Point

Routing parameter setting of request source

Routing parameter setting is also necessary for the request source GOT.

For the setting, refer to the following.

☞ Page 639 Routing parameter setting

■[Controller Setting] of GT Designer3

Item	Set value
Network type	CC IE Control extended mode
Network No.	1: Network No.1
Station No.	2: Station No.2
Group No.	0 (fixed)
Mode	Online (auto. reconnection)
Refresh Interval	1ms (Use default value)
Retry	3times (Use default value)
Timeout Time	3sec (Use default value)
Delay Time	0ms (Use default value)
Monitor Speed	High (Normal) (Use default value)

Point

Network type of the GOT side

When the network is in the extended mode, be sure to set the network type of the GOT side to [CC IE Control extended mode].

For [Controller Setting], of GT Designer3, refer to the following.

☞ Page 633 Setting communication interface (Controller Setting)

Connection to MELSEC-Q, L series

System configuration1 (Network Type: CC IE Control)

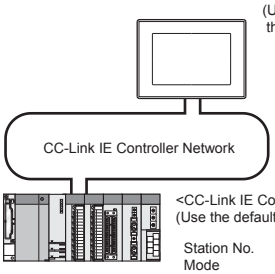

<GOT>
(Use the default value for settings other than the following.)

Network type : CC IE Control
Network No. : 1
Station No. : 2
Made Setting : Online (auto,reconnection)
Network range assignment : LB0100H to LB01FFH
LW00100H to LW001FFH
Monitor Speed : High

<CC-Link IE Controller Network module> *1
(Use the default value for settings other than the following.)

Station No. : 1
Mode : Online
Network type : CC IE Control (Control station)
Network No. : 1
Total stations : 2
Network range assignment : LB0000H to LB00FFH
LW00000H to LW000FFH

*1 The CC-Link IE Controller Network module is mounted on slot 0 of the base unit.
The start I/O No. of the CC-Link IE Controller Network module is set at [0].

Point

When connecting to Q170MCPU or Q170MSCPU(-S1)
When connected to Q170MCPU or Q170MSCPU(-S1), the start I/O No. of the CC-Link IE Controller Network module is set to "70".

System configuration2 (Network Type: CC IE Control extended mode)

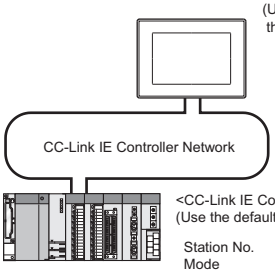

<GOT>
(Use the default value for settings other than the following.)

Network type : CC IE Control extended mode
Network No. : 1
Station No. : 2
Made Setting : Online (auto,reconnection)
Network range assignment : LB0100H to LB01FFH
LW00100H to LW001FFH
Monitor Speed : High

<CC-Link IE Controller Network module> *1
(Use the default value for settings other than the following.)

Station No. : 1
Mode : Online
Network type : CC IE Control extended mode
(Control station)
Network No. : 1
Total stations : 2 LB0000H to LB00FFH
Network range assignment : LW00000H to LW000FFH

*1 The CC-Link IE Controller Network module is mounted on slot 0 of the base unit.
The start I/O No. of the CC-Link IE Controller Network module is set at [0].

Parameter settings (Connection to MELSEC-Q, QS series) of System configuration1 (Network Type: CC IE Control)

■[Network parameter] of GX Developer

- Network parameter

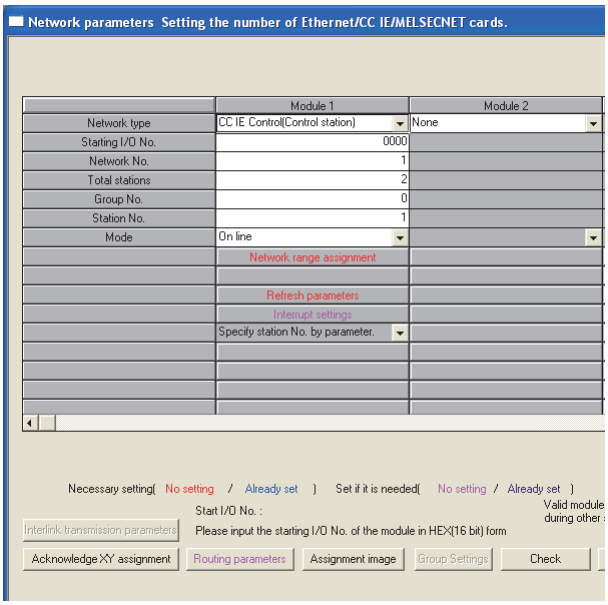

Item	Set value	Setting necessity at GOT connection
Network type	CC IE Control (Control station) (fixed)	○
Starting I/O No.*1	0000H	○
Network No.*2	1	○
Total stations	2	○
Group No.	0 (fixed)	○
Station No.	1	○
Mode*3	Online	○
Network range assignment	☞ • Network range assignment	△
Refresh parameters	(Use default value)	△
Interrupt settings		×
Interlink transmission parameters		×
Routing parameters	☞ • Routing parameter setting	△

○: Necessary △: As necessary ×: Not necessary

*1 When using Q170MCPU or Q170MSCPU(-S1), set it according to the system configuration.

*2 Specify the same network No. as that of the GOT.

*3 Set the same mode setting as that of the GOT.

• Network range assignment

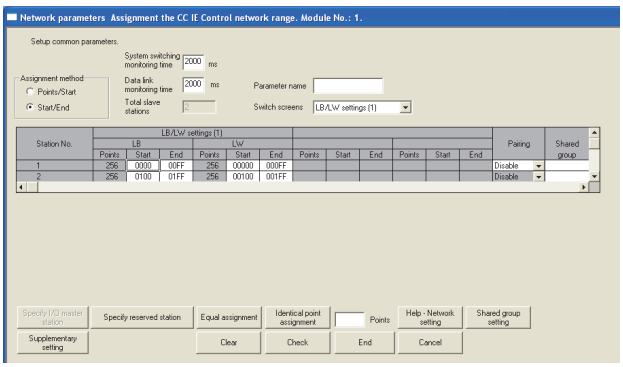

Item				Set value	Setting necessity at GOT connection
Monitoring time				2000	△
LB/LW setting(1)*1	LB	Station No.1	Start	0000H	△
			End	00FFH	△
		Station No.2	Start	0100H	△
			End	01FFH	△
	LW	Station No.1	Start	00000H	△
			End	000FFH	△
		Station No.2	Start	00100H	△
			End	001FFH	△
LX/LY setting*1				No setting	△
Specify I/O master station*1				No setting	△
Specify reserved station				No setting	△
Supplementary setting				(Use default value)	△

○: Necessary △: As necessary ×: Not necessary

*1 Be sure to set it to perform the cyclic transmission.

Point

When changing the network parameter

After writing the network parameter to the PLC CPU, operate the PLC CPU ether turning OFF and then ON or resetting.

• Routing parameter setting

Up to 64 [Transfer Network No.]s can be set.

However, the same transfer network number cannot be set twice or more (multiple times).

Therefore, the one that can access to other station from the request source host GOT is 64 kinds of [Transfer Network No.]s.

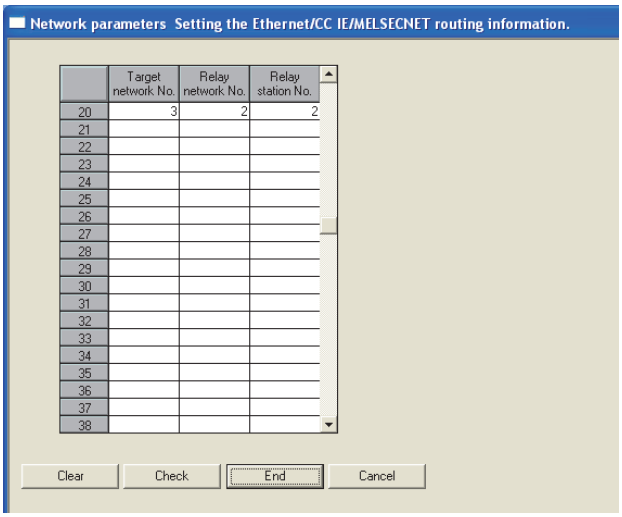

Item	Range
Target network No.	1 to 239
Relay network No.	1 to 239
Relay station No.	0 to 120

Point

Routing parameter setting of request source

Routing parameter setting is also necessary for the request source GOT.

For the setting, refer to the following.

☞ Page 639 Routing parameter setting

Parameter setting (when connecting to C Controller module (Q Series))

Use SW3PVC-CCPU-E Ver.3.05F or later for the CC IE Control utility.

■Connection settings between personal computer and C controller module (Q Series)

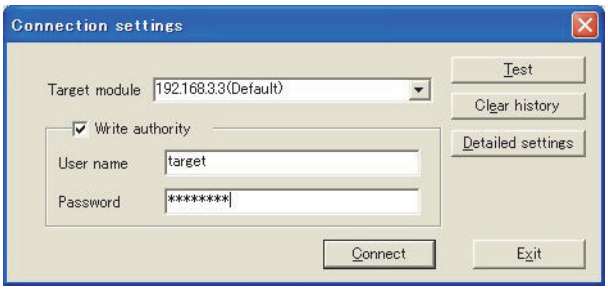

Item	Set value	Setting necessity at GOT connection
Target module*1	192.168.3.3 (Default)	○
Write authority	Mark the checkbox	○
User name*2	target	○
Password*2	password	○
Detailed settings	-	△

○: Necessary △: As necessary ×: Not necessary

*1 If the IP address of the C Controller module (Q Series) has been changed, input the changed IP address or host name.

*2 If the account of the C Controller module (Q Series) has been changed, input the changed user name and password.

■CC IE Control Utility's [Parameter Settings]

- Parameter settings

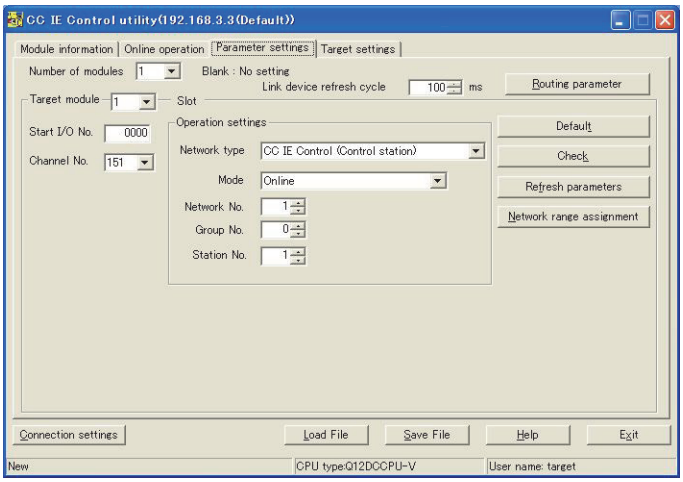

Item		Set value	Setting necessity at GOT connection
Number of modules		1	○
Link device refresh cycle		(Use default value)	△
Routing parameter		☞ • Routing parameter setting	△
Target module		1	○
Start I/O No.		0000H	○
Channel No.		151	○
Operation settings	Network type	CC IE Control (Control station)	○
	Mode*1	Online	○
	Network No.*2	1	○
	Group No.	0	○
	Station No.	1	○
Refresh parameters		(Use default value)	△
Network range assignment		☞ • Network range assignment	△

○: Necessary △: As necessary ×: Not necessary

*1 Set the same mode setting as that of the GOT.

*2 Specify the same network No. as that of the GOT.

• Network range assignment

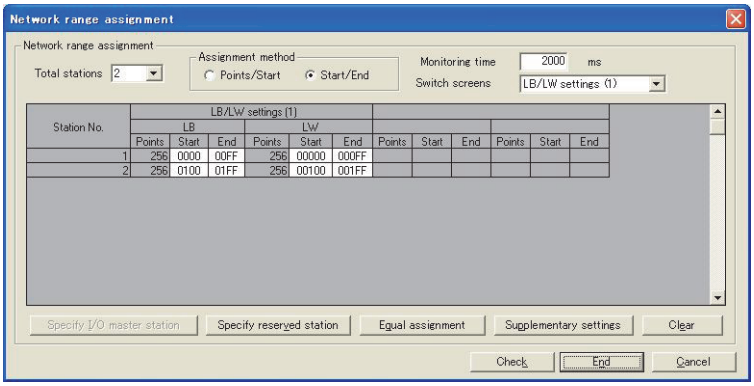

Item				Set value	Setting necessity at GOT connection
Total stations				2	○
LB/LW settings (1)	LB	Station No.1	Start	0000H	△
			End	00FFH	△
		Station No.2	Start	0100H	△
			End	01FFH	△
	LW	Station No.1	Start	00000H	△
			End	000FFH	△
		Station No.2	Start	00100H	△
			End	001FFH	△
LX/LY settings*1				No setting	△
Monitoring time				(Use default value)	△
Specify I/O master station*1				No setting	△
Specify reserved station				No setting	△
Supplementary settings				(Use default value)	△

○: Necessary △: As necessary ×: Not necessary

*1 Be sure to set it to perform the cyclic transmission.

Point

When changing the network parameter

After writing the network parameter to the C Controller module (Q Series), either turn the C Controller module (Q Series) OFF and then ON or reset it.

• Routing parameter setting

Up to 64 [Transfer Network No.]s can be set.

However, the same transfer network number cannot be set twice or more (multiple times).

Therefore, the one that can access to other station from the request source host GOT is 64 kinds of [Transfer Network No.]s.

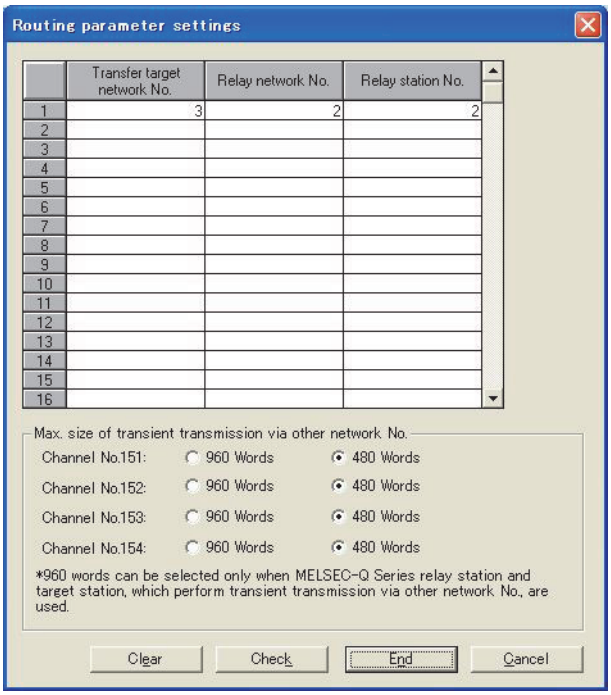

Item	Range
Transfer target network No.	1 to 239
Relay network No.	1 to 239
Relay station No.	0 to 120

Point

Routing parameter setting of request source

Routing parameter setting is also necessary for the request source GOT.

For the setting, refer to the following.

☞ Page 639 Routing parameter setting

GT Designer3 [Communication settings] of System configuration1 (Network Type: CC IE Control)

Item	Set value
Network Type	CC IE Control
Network No.	1: Network No.1
Station No.	2: Station No.2
Group No.	0 (fixed)
Mode Setting	Online (auto. reconnection)
Transmission Speed	1 Gbps (fixed)
Refresh Interval	1ms (Use default value)
Retry	3times (Use default value)
Timeout Time	3sec (Use default value)
Delay Time	0ms (Use default value)
Monitor Speed	High(Normal) (Use default value)

Point

[Controller Setting] of GT Designer3

For the setting method of [Controller Setting] of GT Designer3, refer to the following.

☞ Page 633 Setting communication interface (Controller Setting)

Parameter settings (Connection to Universal model QCPU) of System configuration2 (Network Type: Extended mode)

■[Network parameter] of GX Works2

- Network parameter

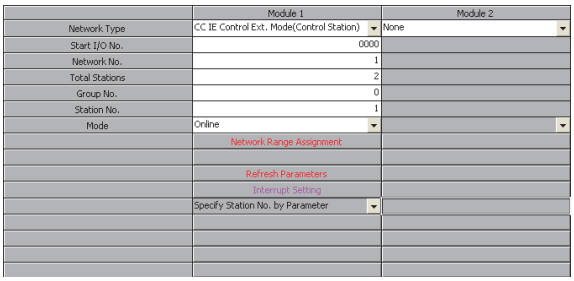

Item	Set value	Setting necessity at GOT connection
Network Type	CC IE Control Ext. Mode (Control station) (fixed)	○
Start I/O No.*1	0000H	○
Network No.*2	1	○
Total Stations	2	○
Group No.	0 (Fixed)	○
Station No.	1	○
Mode*3	Online	○
Network Range Assignment	Same as the following setting ☞ Page 651 [Network parameter] of GX Developer	△
Refresh Parameters	(Use default value)	△
Interrupt Setting		×
Interlink transmission parameters		×
Routing parameters	Same as the following setting ☞ Page 651 [Network parameter] of GX Developer	△

○: Necessary △: As necessary ×: Not necessary

■[Controller Setting] of GT Designer3

Item	Set value
Network type	CC IE Control extended mode
Network No.	1: Network No.1
Station No.	2: Station No.2
Group No.	0 (Fixed)
Mode	Online (auto. reconnection)
Refresh Interval	High (Use default value)
Retry	3times (Use default value)
Timeout Time	3sec (Use default value)
Delay Time	1ms (Use default value)
Monitor Speed	High(Normal) (Use default value)

Point

• Network type of the GOT side

When the network is in the extended mode, be sure to set the network type of the GOT side to [CC IE Control extended mode].

For [Controller Setting], of GT Designer3, refer to the following.

☞ Page 633 Setting communication interface (Controller Setting)

• Network type of the PLC side

Only GX Works2 can set [CC IE Control extended mode (control station)] or [CC IE Control extended mode (ordinary station)]. The CPU which is compatible with the extended mode is Universal model QCPU only.

10.5 Precautions

GOT startup in CC-Link IE Controller Network connection

For the CC-Link IE Controller Network connection, the data link is started approximately 13 seconds after the GOT startup.

When a network error occurs in the system alarm

In the CC-Link IE Controller Network connection, when a network error occurs in the system alarm, the system alarm display cannot be canceled even though the causes are removed.
To cancel the system alarm display, restart the GOT.

Connection in the multiple CPU system

When the GOT is connected to multiple CPU system, the following time is taken until when the PLC runs.
MELSEC iQ-R series, Motion CPU (MELSEC iQ-R series), QCPU (Q mode), Motion CPU (Q series): 10 seconds or more
MELDAS C70: 18 seconds or more
When the GOT starts before the PLC runs, a system alarm occurs. Adjust the opening screen time in the GOT setup so that no system alarm occurs.
📖GT Designer3 (GOT2000) Screen Design Manual

CC-Link IE Controller Network module version

For version restrictions of the CC-Link IE Controller Network module, refer to the following manual.
📖CC-Link IE Controller Network Reference Manual

Connection to QSCPU

The GOT can only read device data and sequence programs by the ladder monitor function in the QSCPU.
The GOT cannot write any data to the QSCPU.

Connection to Q170MCPU or Q170MSCPU(-S1)

Set [CPU No.] to 2 in the device setting to monitor the device of the Motion CPU area (CPU No. 2).
When [CPU No.] is set to 0 or 1, the device on the PLC CPU area (CPU No. 1) is monitored.
When [CPU No.] is set to the number other than 0 to 2, a communication error occurs and the monitoring cannot be executed.
For the setting of [CPU No.], refer to the following.
📖GT Designer3 (GOT2000) Screen Design Manual

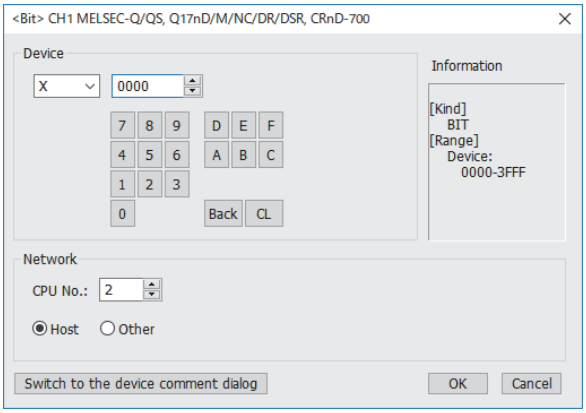

Connection to RnSFCPU

The RnSFCPU takes 10 seconds or more to run.

If the GOT is started before the RnSFCPU runs, a system alarm occurs.

To prevent a system alarm from occurring, adjust the title display time in the [GOT Setup] dialog.

📖GT Designer3 (GOT2000) Screen Design Manual

Connecting one PLC with multiple GOTs

When multiple GOTs access one PLC simultaneously, writing (transient/cyclic) and reading (transient) data to/from the GOTs may slow down.

The following countermeasures can prevent this slowdown.

<Countermeasures>

■Improving the PLC's response speed

Insert a COM instruction on the PLC to increase the response speed. Note that caution is required as the scan time will increase.

■Designing screens using cyclic devices

Create screens using cyclic devices instead of transient devices.

■Splitting connection destinations of the GOTs into multiple systems

Add a master/local module to the PLC and split the connection destinations of the GOTs into multiple systems. Improve the current system configuration.

(Example of current system configuration)

In the following system configuration, the GOTs access one module.

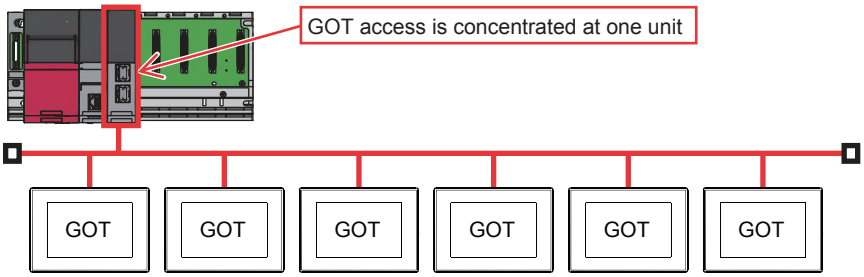

(Improvement measure)

- Adding a module to the PLC

Add a module to the PLC to disperse access destinations for the GOTs.

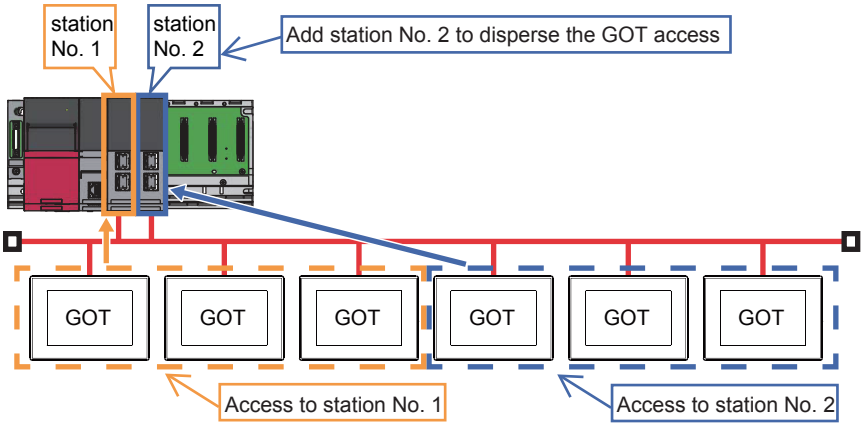

• Splitting the network

Split the network to disperse accesses from the GOTs.

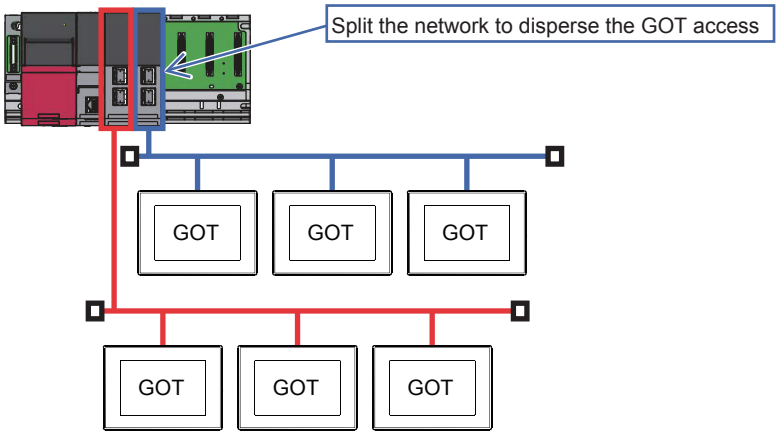

MEMO

11 CC-Link IE FIELD NETWORK CONNECTION

- Page 665 Connectable Model List
- Page 672 System Configuration
- Page 674 GOT side settings
- Page 682 PLC Side Setting
- Page 692 Precautions

11.1 Connectable Model List

PLC/Motion CPU

The following table shows the connectable models.

Series	Model name	Clock	Communication type	Connectable model	Refer to
MELSEC iQ-R Series	R00CPU	○	CC-Link IE FIELD NETWORK	GT27 GT25	☞ Page 672 System Configuration
	R01CPU				
	R02CPU				
	R04CPU				
	R08CPU				
	R16CPU				
	R32CPU				
	R120CPU				
	R08PCPU*1				
	R16PCPU*1				
	R32PCPU*1				
	R120PCPU*1				
	R04ENCPU				
	R08ENCPU				
	R16ENCPU				
	R32ENCPU				
	R120ENCPU				
	R08PSFCPU *2				
	R16PSFCPU *2				
	R32PSFCPU *2				
	R120PSFCPU *2				
	R08SFCPU*3				
	R16SFCPU*3				
	R32SFCPU*3				
	R120SFCPU*3				
Motion CPU (MELSEC iQ-R Series)	R16MTCPU	○	CC-Link IE FIELD NETWORK	GT27 GT25	☞ Page 672 System Configuration
	R32MTCPU				
	R64MTCPU				
C Controller module (MELSEC iQ-R Series)	R12CCPU-V	○	CC-Link IE FIELD NETWORK	GT27 GT25	☞ Page 672 System Configuration
MELSECWinCPU (MELSEC iQ-R Series)	R102WCPU-W	×	-	-	-
CNC C80	R16NCCPU-S1	○	CC-Link IE FIELD NETWORK	GT27 GT25	☞ Page 672 System Configuration
Robot controller (MELSEC iQ-R Series)	CR800-R(R16RTCPU)	○	CC-Link IE FIELD NETWORK	GT27 GT25	☞ Page 672 System Configuration

Series	Model name	Clock	Communication type	Connectable model	Refer to
CC-Link IE Field Network head module	RJ72GF15-T2	×	CC-Link IE FIELD NETWORK	GT27 GT25	☞ Page 672 System Configuration
MELSEC iQ-F Series	FX5U	○	CC-Link IE FIELD NETWORK	GT27 GT25	☞ Page 672 System Configuration
	FX5UC				
	FX5UJ				
	FX5S	○	-	-	-
MELSEC-Q (Q mode)	Q00JCPU	○	-	-	-
	Q00CPU*4				
	Q01CPU*4				
	Q02CPU*4				
	Q02HCPU*4				
	Q06HCPU*4				
	Q12HCPU*4				
	Q25HCPU*4				
	Q02PHCPU				
	Q06PHCPU				
	Q12PHCPU				
	Q25PHCPU				
	Q12PRHCPU(Main base)				
	Q25PRHCPU(Main base)				
	Q12PRHCPU(Extension base)	○	-	-	-
	Q25PRHCPU(Extension base)				
	Q00UJCPU Q00UJCPU-S8	○	CC-Link IE FIELD NETWORK	GT27 GT25	☞ Page 672 System Configuration
	Q00UCPU				
	Q01UCPU				
	Q02UCPU				
	Q03UDCPU				
	Q04UDHCPU				
	Q06UDHCPU				
	Q10UDHCPU				
	Q13UDHCPU				
	Q20UDHCPU				
	Q26UDHCPU				
	Q03UDECPU				
	Q04UDEHCPU				
	Q06UDEHCPU				
	Q10UDEHCPU				
	Q13UDEHCPU				
	Q20UDEHCPU				
	Q26UDEHCPU				
	Q50UDEHCPU				
	Q100UDEHCPU				
	Q03UDVCPU Q04UDVCPU Q06UDVCPU Q13UDVCPU Q26UDVCPU	○	CC-Link IE FIELD NETWORK	GT27 GT25	☞ Page 672 System Configuration
C Controller module (Q Series)	Q12DCCPU-V*4 Q24DHCCPU-V/VG Q24DHCCPU-LS Q26DHCCPU-LS	○	CC-Link IE FIELD NETWORK	GT27 GT25	☞ Page 672 System Configuration

Series	Model name	Clock	Communication type	Connectable model	Refer to
MELSEC-QS	QS001CPU*5	○	CC-Link IE FIELD NETWORK	GT27 GT25	☞ Page 672 System Configuration
MELSEC-L	L02CPU*6 L06CPU*6 L26CPU*6 L26CPU-BT*6 L02CPU-P*6 L06CPU-P*6 L26CPU-P*6 L26CPU-PBT*6 L02SCPU*6 L02SCPU-P*6	○	CC-Link IE FIELD NETWORK	GT27 GT25	☞ Page 672 System Configuration
MELSEC-Q (A mode)	Q02CPU-A Q02HCPU-A Q06HCPU-A	○	-	-	-
MELSEC-QnA (QnACPU)	Q2ACPU Q2ACPU-S1 Q3ACPU Q4ACPU Q4ARCPU	○	-	-	-
MELSEC-QnA (QnASCPU)	Q2ASCPU Q2ASCPU-S1 Q2ASHCPU Q2ASHCPU-S1	○	-	-	-
MELSEC-A (AnCPU)	A2UCPU A2UCPU-S1 A3UCPU A4UCPU A2ACPU A2ACPUP21 A2ACPUR21 A2ACPU-S1 A2ACPUP21-S1 A2ACPUR21-S1 A3ACPU A3ACPUP21 A3ACPUR21 A1NCPU A1NCPUP21 A1NCPUR21 A2NCPU	○	-	-	-
	A2NCPUP21	○	-	-	-
	A2NCPUR21				
	A2NCPU-S1				
	A2NCPUP21-S1				
	A2NCPUR21-S1				
	A3NCPU				
	A3NCPUP21				
	A3NCPUR21				

Series	Model name	Clock	Communication type	Connectable model	Refer to
MELSEC-A (AnSCPU)	A2USCPU	○	-	-	-
	A2USCPU-S1				
	A2USHCPU-S1				
	A1SCPU				
	A1SCPUC24-R2				
	A1SHCPU				
	A2SCPU				
	A2SCPU-S1				
	A2SHCPU				
	A2SHCPU-S1				
	A1SJCPU				
	A1SJCPU-S3				
	A1SJHCPU				
MELSEC-A	A0J2HCPU	×	-	-	-
	A0J2HCPUP21				
	A0J2HCPUR21				
	A0J2HCPU-DC24				
	A2CCPU	○	-	-	-
	A2CCPUP21				
	A2CCPUR21				
	A2CCPUC24				
	A2CCPUC24-PRF				
	A2CJCPU-S3				
	A1FXCPU				
Motion CPU (Q Series)	Q172CPU	○	-	-	-
	Q173CPU				
	Q172CPUN				
	Q173CPUN				
	Q172HCPU				
	Q173HCPU				
	Q172DCPU	○	CC-Link IE FIELD NETWORK	-	-
	Q173DCPU				
	Q172DCPU-S1				
	Q173DCPU-S1				
	Q172DSCPU				
	Q173DSCPU				
	Q170MCPU*7			GT 27 GT 25 *9	☞ Page 672 System Configuration
	Q170MSCPU*8				
	Q170MSCPU-S1*8				

Series	Model name	Clock	Communication type	Connectable model	Refer to
Motion CPU (A Series)	A273UCPU	○	-	-	-
	A273UHCPU				
	A273UHCPU-S3				
	A373UCPU				
	A373UCPU-S3				
	A171SCPU				
	A171SCPU-S3				
	A171SCPU-S3N				
	A171SHCPU				
	A171SHCPUN				
	A172SHCPU				
	A172SHCPUN				
	A173UHCPU				
	A173UHCPU-S1				
MELSEC-WS	WS0-CPU0	×	-	-	-
	WS0-CPU1				
	WS0-CPU3				
MELSECNET/H Remote I/O station	QJ72LP25-25	×	-	-	-
	QJ72LP25G				
	QJ72BR15				
CC-Link IE Field Network head module	LJ72GF15-T2	×	CC-Link IE FIELD NETWORK	GT27 GT25	☞ Page 672 System Configuration
CC-Link IE Field Network Ethernet adapter module	NZ2GF-ETB	×	CC-Link IE FIELD NETWORK	GT27 GT25	☞ Page 672 System Configuration
CNC C70	Q173NCCPU	○	CC-Link IE FIELD NETWORK	GT27 GT25	☞ Page 672 System Configuration
Robot controller (Q Series)	CRnQ-700 (Q172DRCPU) CR750-Q (Q172DRCPU) CR751-Q (Q172DRCPU) CR800-Q (Q172DSRCPU)	○	CC-Link IE FIELD NETWORK	GT27 GT25	☞ Page 672 System Configuration
MELSEC-FX	FX0	×	-	-	-
	FX0S				
	FX0N				
	FX1				
	FX2	×			
	FX2C				
	FX1S	○			
	FX1N				
	FX2N				
	FX1NC				
	FX2NC	×			
	FX3S	○			
	FX3G				
	FX3GC				
	FX3GE				
	FX3U				
	FX3UC				

*1 Mount a redundant function module R6RFM next to the RnPCPU on the base unit when building a redundant system.
*2 Mount the SIL2 function module R6PSFM and redundant function module R6RFM next to the RnPSFCPU on the base unit.
*3 Mount a safety function module R6SFM next to the RnSFCPU on the base unit.
The RnSFCPU and the safety function module R6SFM must have the same pair version.
If their pair versions differ, the RnSFCPU does not operate.
*4 Use a module with the upper five digits later than 12042.
*5 Use a module with the upper five digits later than "13042". Use GX Developer of Version 8.98C or later.
*6 Use a module with the upper five digits later than 13012.
*7 Only the first step can be used on the extension base unit (Q52B/Q55B).
*8 The extension base unit (Q5□B/Q6□B) can be used.
*9 For the PLC CPU area, use a module with the upper five digits later than 12012. Only the PLC CPU area can be monitored.

CC-Link IE Field Network communication unit

CPU series	CC-Link IE Field Network communication unit
MELSEC iQ-R Series Motion CPU (MELSEC iQ-R Series) C Controller module (MELSEC iQ-R Series) CNC C80 CR800-R(R16RTCPU)	RJ71GF11-T2*1 RJ71EN71*1 RD77GF4, RD77GF8, RD77GF16, RD77GF32
MELSEC iQ-F Series	FX5-CCLIEF
MELSEC-Q(Universal model) C Controller module (Q Series) CNC C70 CR800-Q (Q172DSRCPU)	QJ71GF11-T2, QD77GF4, QD77GF8, QD77GF16
MELSEC-L	LJ71GF11-T2
MELSEC-QS	QS0J71GF11-T2

*1 Use firmware version 12 or higher when building a redundant system.

11.2 System Configuration

Connection to CC-Link IE Field Network communication unit

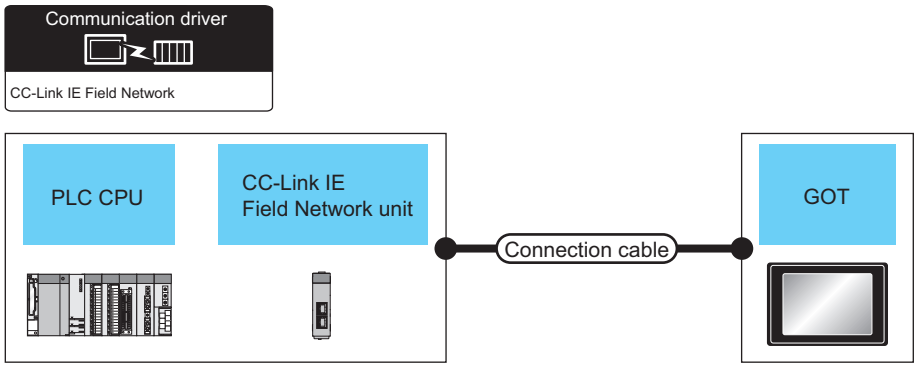

PLC			Connection cable		GOT		Number of connectable equipment
Model name	**CC-Link IE Field Network communication unit**	**Communication type**	**Cable model*2**	**Max distance *1**	**option device*5**	**Model**	
MELSEC iQ-R Series Motion CPU (MELSEC iQ-R Series) C Controller module (MELSEC iQ-R Series) CNC C80 CR800-R(R16RTCPU)	RJ71GF11-T2 RJ71EN71 RD77GF4*4 RD77GF8*4 RD77GF16*4 RD77GF32*4	CC-Link IE Field Network	Ethernet cable that meets the 1000BASE-T standard: Category 5e or higher, (double-shielded, STP) straight cable.	12100m	GT15-J71GF13-T2 *6*7	GT27 GT25	120 GOTs
MELSEC iQ-F Series	FX5-CCLIEF						
R04ENCPU R08ENCPU R16ENCPU R32ENCPU R120ENCPU	-						
MELSEC-Q (Universal model) Q170MCPU C Controller module (Q Series) CNC C70 CR800-Q (Q172DSRCPU)	QJ71GF11-T2 QD77GF4*3 QD77GF8*3 QD77GF16*3						
MELSEC-QS	QS0J71GF11-T2						
MELSEC-L	LJ71GF11-T2						
CC-Link IE Field Network head module	-						
Ethernet adapter module	-						

*1 The overall extension cable length and the length between stations vary depending on the connection method (line, star or ring), the system configuration, etc.
For details, refer to the following manual.
📖CC-Link IE Field Network Master/Local Module User's Manual

*2 Use hubs that satisfy the following conditions.
- Compliance with the IEEE802.3 (1000BASE-T)
- Supporting the auto MDI/MDI-X function
- Supporting the auto-negotiation function
- Switching hub (A repeater hub is not available.)

Recommended switching hub (Mitsubishi Electric products)

Type	Model name
Industrial switching hub	NZ2EHG-T8

For details, refer to the following manual.
📖CC-Link IE Field Network Master/Local Module User's Manual

*3 When connecting to the QD77GF4, QD77GF8, QD77GF16, refer to the following manual.
📖MELSEC-Q QD77GF Simple Motion Module User's Manual

*4 When connecting to the RD77GF4, RD77GF8, RD77GF16 and RD77GF32, refer to the following manual.
📖RD77GF Simple Motion Module User's Manual

*5 GT25-W and GT2505-V do not support option devices.

*6 When connecting to the RCPU redundant system, use the product with hardware version C or later.
For information on how to check the hardware version, refer to the following.
📖GOT2000 Series User's Manual (Hardware)

*7 When a submaster station is in the network configuration, use the software version C or later.
The software version is the 10th digit of the serial number described on the rating plate of the unit.

11.3 GOT side settings

Setting communication interface (Controller Setting)

Set the channel of connecting equipment.

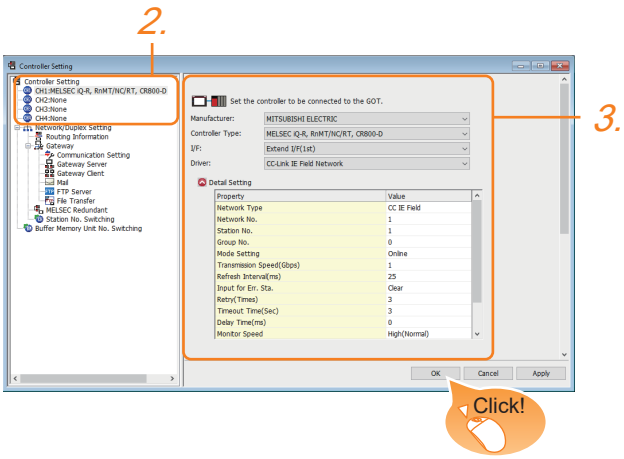

1. Select [Common] → [Controller Setting] from the menu.

2. In the [Controller Setting] window, select the channel No. to be used from the list menu.

3. Set the following items.

- [Manufacturer]: [MITSUBISHI ELECTRIC]
- [Controller Type]: Configure the setting according to the controller to be connected.
- [I/F]: Interface to be used
- [Driver]: [CC-Link IE Controller Network]
- [Detail Setting]: Configure the settings according to the usage environment.

☞ Page 675 Communication detail settings

4. When you have completed the settings, click the [OK] button.

Point

The settings of connecting equipment can be confirmed in [I/F Communication Setting].
For details, refer to the following.
☞ Page 54 I/F communication setting

Communication detail settings

Make the settings according to the usage environment.

Property	Value
Network Type	CC IE Field
Network No.	1
Station No.	1
Group No.	0
Mode Setting	Online
Transmission Speed(Gbps)	1
Refresh Interval(ms)	25
Input for Err. Sta.	Clear
Retry(Times)	3
Timeout Time(Sec)	3
Delay Time(ms)	0
Monitor Speed	High(Normal)
CPU No. switching GD device first No. (3 points)	500
Module No. switching GD device first No. (16 points	550
Servo axis switching GD device first No. (16 points)	10

Item	Description	Range
Network Type	Set the network Type.	• CC IE Field
Network No.	Set the network No. of the GOT. (Default: 1)	1 to 239
Station No.	Set the station No. of the GOT. (Default: 1)	1 to 120
Group No.	-	0 (fixed)
Mode Setting	Set the operation mode of the GOT. (Default: Online (auto. reconnection)) For details on the H/W test and self-loopback test, refer to the following. ☞ Page 677 H/W test ☞ Page 677 Self-loopback test	• Online • Offline • H/W test • Self-loopback test
Tramsmission Speed	-	1 Gbps (fixed)
Reflesh Interval	Set the number of refreshes to secure the send/receive data in station units during communication. (Default: 25ms)	1 to 1000ms
Input for Error Station	Set the hold/clear of input from the station where the data link is faulty due to some reason such as turning the power OFF. (Default: Clear)	Clear/Hold
Retry	Set the number of retries to be performed when a communication timeout occurs. When receiving no response after retries, the communication times out. (Default: 3times)	0 to 5times
Timeout Time	Set the time period for a communication to time out. (Default: 3sec)	3 to 90sec
Delay Time	Set the delay time for reducing the load of the network/destination PLC. (Default: 0ms)	0 to 300ms
Monitor Speed *3	Set the monitor speed for the CC-Link IE field network. This setting is not valid in all systems. (Default: High(Normal))	High(Normal) *1/ Middle/Low *2
CPU No. switching GD device first No. (3 points)	Set the start device number of the GD devices for CPU No. switching. (Default: 500) For the details, refer to the following. ☞ Page 678 Start device number of the GD devices for CPU number switching	0 to 65520
Module No. switching GD device first No. (16 points)	Set the start device number of the GD devices for module No. switching. (Default: 550) For the details, refer to the following. ☞ Page 679 Start device number of the GD devices for module number switching	0 to 65520
Servo axis switching GD device first No. (16 points)	Set the servo axis switching GD device first No. (Default: 10) For the details, refer to the following. ☞ Page 680 Servo axis switching GD device first No.	0 to 65520

*1 This range is effective when collecting a large amount of data (such as logging and recipe function) on other than the monitor screen.
However, the range may affect the sequence scan time when connecting to Q00UJ/Q00U/Q01U/Q02UCPU.
If you want to avoid the influence on the sequence scan time, do not set [High(Normal)].
(This setting hardly affects QCPUs other than the above.)

*2 Set this range if you want to avoid the influence on the sequence scan time further than the [Middle] setting when connecting to Q00UJ/Q00U/Q01U/Q02UCPU.
However, the monitor speed may be reduced.

*3 When using a global label, to read or write more than 235 two-byte characters, set the [Monitor speed] to [High (Standard)] or [Middle].
If [Monitor speed] is set to [Low], a system error occurs when reading or writing.
For details, refer to the following manual.
📖GT Designer3 (GOT2000) Screen Design Manual

Point

• Switch setting example

For the switch setting example, refer to the following.

☞ Page 682 PLC Side Setting

• Communication interface setting by Utility

The communication interface setting can be changed on the Utility's [Communication Settings] after writing [Controller Setting] of project data.

For details on the Utility, refer to the following manual.

📖GOT2000 Series User's Manual (Utility)

• Precedence in communication settings

When settings are made by GT Designer3 or the Utility, the latest setting is effective.

• Network type

Be sure to set the same network types for the CPU side and the GOT side. If the network types of the CPU side and the GOT side are different, an error is displayed in the system alarm of the GOT side.

H/W test

In a H/W test, mount a CC-Link IE field network communication unit on the GOT, and check if the unit operates properly with the GOT.
The following shows the H/W test procedure.

1. Perform one of the following operations to set the GOT to the H/W test mode.

- Write the project data for which [Mode Setting] in [Detail Setting] is set to [H/W test] to the GOT.
- Set [Mode setting] of [Detail setting] to [H/W Test] in the GOT utility.

2. A H/W test will start at a GOT startup.

3. After the H/W test is complete, check the test result with the ERR LED of the CC-Link IE field network communication unit.

- OFF: Normal
- ON: Error

4. When no error is detected, change [H/W Test] set in [Mode setting] of [Detail setting].

Since the communication with the controller is not performed when [Mode setting] is set to [H/W Test], the communication timeout error occurs when the device of controller is monitored.

5. If any error is detected, replace the CC-Link IE Field Network communication unit.

Self-loopback test

In a self-loopback test, connect port 1 and port 2 of the CC-Link IE Field Network communication unit mounted on the GOT with a network cable, and check if the unit operates properly with the GOT.
The following shows the self-loopback test procedure.

1. Perform one of the following operations to set the GOT to the self-loopback test mode.

- Write the project data for which [Mode Setting] in [Detail Setting] is set to [Self-loopback test] to the GOT.
- Set [Mode setting] in [Detail setting] to [Self-loopback Test] in the GOT utility.

2. A self-loopback test will start at a GOT startup.

3. After the test is complete, check the result with the ERR LED on the CC-Link IE Field Network communication unit.

- OFF: Normal
- ON: Error

4. When no error is detected, change [Self-loopback Test] in [Mode setting] of [Detail setting].

Since the communication with the controller is not performed when [Mode setting] is set to [Self-loopback Test], the communication timeout error occurs when the device of controller is monitored.

5. If any error is detected, replace the CC-Link IE Field Network communication unit.

Start device number of the GD devices for CPU number switching

■Specifying a CPU number with a device

[CPU No.] can be specified with the GOT internal registers (GD devices) by specifying a value (100 to 102) to [CPU No.] in the device setting dialog in GT Designer3.

Set the start device number of the GD devices to be used in [CPU No. switching GD device first No. (3 points)].

Specify [CPU No.] with the three consecutive GD devices, starting the set device number.

When [500] is set to [CPU No. switching GD device first No. (3 points)], GD500 to GD502 are used to specify [CPU No.] as shown in the following table.

CPU No.	GD device	Setting range
100	GD500	1 to 4 Setting an invalid value causes a communication timeout error. Specifying a nonexistent CPU No. or a CPU No. not supporting a multiple CPU system with a device causes a controller error.
101	GD501	
102	GD502	

■Specifying a CPU number with a device on the initially-displayed screen

Set [CPU No. switching GD device first No. (3 points)] so that the values of the GD devices are retained and monitored upon the GOT startup.

■Specifying a CPU number with a device in a multi-channel connection

If the setting range of [CPU No. switching GD device first No. (3 points)] set in each channel overlaps, the monitoring target CPU No. set to each channel is switched simultaneously.

Set [CPU No. switching GD device first No. (3 points)] in each channel so that the setting range does not overlap.

■Specifying a CPU number and a station number with devices in a multi-channel connection

When GD10 to GD25 are used to specify the station No. of an inverter or non-Mitsubishi temperature controller connected, setting [10] to [CPU No. switching GD device first No. (3 points)] in a different channel switches the monitoring target CPU No. and station No. of an inverter or non-Mitsubishi temperature controller set to each channel simultaneously.

Set [CPU No. switching GD device first No. (3 points)] so that the setting range does not overlap the station No. of an inverter or non-Mitsubishi temperature controller.

Start device number of the GD devices for module number switching

■Specifying a module number with a device

In a connection via a simple motion module, [Unit No.] can be specified with the GOT internal registers (GD devices) by specifying a value (100 to 10F) to [Unit No.] in the device setting dialog in GT Designer3.
Set the start device number of the GD devices to be used in [Module No. switching GD device first No. (16 points)].
Specify [Unit No.] with the 16 consecutive GD devices, starting the set device number.
When [550] is set to [Module No. switching GD device first No. (16 points)], GD550 to GD565 are used to specify [Unit No.] as shown in the following table.

Unit No.	GD device	Setting range
100	GD550	The setting range depends on [Unit Type]. • When [MELSEC iQ-R, RnMT/NC/RT, CR800-D], [MELSEC iQ-R, RnMT/RT, CR800-D], [MELSEC-Q/QS, Q17nD/M/NC/DR/DSR, CRnD-700], [MELSEC-Q, Q17nD/M/DR/DSR, CRnD-700], [MELSEC-L] or [MELIPC] is selected for [Unit Type] 00 to FF • When [MELSEC iQ-F] is selected for [Unit Type] 01 to 10 Setting an invalid value causes a device range error.
101	GD551	
102	GD552	
103	GD553	
104	GD554	
105	GD555	
106	GD556	
107	GD557	
108	GD558	
109	GD559	
10A	GD560	
10B	GD561	
10C	GD562	
10D	GD563	
10E	GD564	
10F	GD565	

■Specifying a module number with a device on the initially-displayed screen

Set [Module No. switching GD device first No. (16 points)] so that the values of the GD devices are retained and monitored upon the GOT startup.

■Specifying a module number with a device in a multi-channel connection

If the setting range of [Module No. switching GD device first No. (16 points)] set in each channel overlaps, the module No. of the simple motion module via the servo amplifier device of each channel is switched simultaneously.
Set [Module No. switching GD device first No. (16 points)] for each channel so that the setting range does not overlap.

■Specifying a station number and a module number with devices in a multi-channel connection

When GD10 to GD25 are used to specify the station No. of an inverter or non-Mitsubishi temperature controller connected, setting [10] to [Module No. switching GD device first No. (16 points)] switches the module No. of the simple motion module via the servo amplifier device and the station No. of an inverter or non-Mitsubishi temperature controller set to each channel simultaneously.
Set [Module No. switching GD device first No. (16 points)] so that the setting range does not overlap the station No. of an inverter or non-Mitsubishi temperature controller.

Servo axis switching GD device first No.

■Indirect specification of the servo axis No.

In a connection via a Motion CPU or Simple Motion module, a servo axis No. can be indirectly specified with GOT internal registers (GD devices) by specifying a value (100 to 115) to the axis No. of the servo amplifier device.
Set the start device number of the GD devices to be used in [Servo axis switching GD device first No. (16 points)].
Specify a servo axis number with 16 consecutive GD devices, starting the set device number.
When [10] is set to [Servo axis switching GD device first No. (16 points)], GD10 to GD25 are used to specify a servo axis number as shown in the following table.

Servo axis No.	GD device	Setting range
100	GD10	1 to 64 Setting an invalid value causes a device range error.
101	GD11	
102	GD12	
103	GD13	
104	GD14	
105	GD15	
106	GD16	
107	GD17	
108	GD18	
109	GD19	
110	GD20	
111	GD21	
112	GD22	
113	GD23	
114	GD24	
115	GD25	

■Specifying a servo axis number with a device on the initially-displayed screen

Set [Servo axis switching GD device first No. (16 points)] so that the values of the GD devices are retained and monitored upon the GOT startup.

■Specifying a servo axis number with a device in a multi-channel connection

If the setting rage of [Servo axis switching GD device first No. (16 points)] set in each channel overlaps, the axis No. of the servo amplifier of each channel is switched simultaneously.
Set [Servo axis switching GD device first No. (16 points)] for each channel so that the setting range does not overlap.

■Specifying a station number and a servo axis number with devices in a multi-channel connection

When GD10 to GD25 are used to specify the station No. of an inverter or non-Mitsubishi temperature controller connected, setting [10] to [Servo axis switching GD device first No. (16 points)] switches the axis No. of the servo amplifier and the station No. of an inverter or non-Mitsubishi temperature controller set to each channel simultaneously.
Set [Servo axis switching GD device first No. (16 points)] so that the setting range does not overlap the station No. of an inverter or non-Mitsubishi temperature controller.

Routing parameter setting

Up to 64 [Transfer Network No.]s can be set.
However, the same transfer network number cannot be set twice or more (multiple times).
Therefore, the one that can access to other station from the request source host GOT is 64 kinds of [Transfer Network No.]s.

Point

Routing parameter setting
When communicating within the host network, routing parameter setting is unnecessary.
For details of routing parameters, refer to the following manual.
📖MELSEC iQ-R CPU Module User's Manual (Application)
📖MELSEC-Q CC-Link IE Field Network Master/Local Module User's Manual

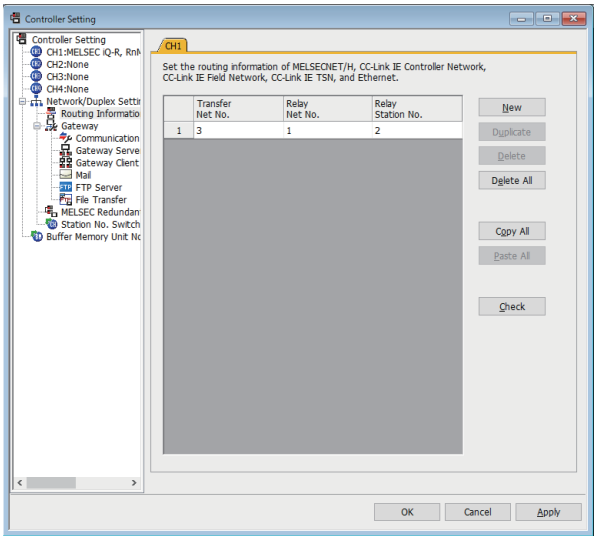

Item	Range
Transfer Network No.	1 to 239
Relay Network No.	1 to 239
Relay Station No.	0 to 120

Point

• Routing parameter setting of relay station
Routing parameter setting is also necessary for the relay station.
For the setting, refer to the following.
☞ Page 682 PLC Side Setting
• Parameter reflection function of MELSOFT Navigator
The color of the cells for the items which are reflected to GT Designer3 from MELSOFT Navigator changes to green. Set items, which are displayed in green cells, from the MELSOFT Navigator.
When the settings of Transfer network No., Relay network No. or Relay station No. are reflected to the parameter from the MELSOFT Navigator, those settings are added. Items set in advance are not deleted.
However, if the target network No. overlaps, the item set in advance is overwritten.
The routing information is used manually by the user when the data is created. Therefore, after changing the network configuration by MELSOFT Navigator, create a routing information again. For details of the creation of the routing information, refer to the MELSOFT Navigator help.

11.4 PLC Side Setting

This section describes the settings of the GOT and CC-Link IE controller network module in the following case of system configuration.

Point

CC-Link IE Field Network Module
For details of the CC-Link IE Field Network module, refer to the following manual.
CC-Link IE Field Network Master/Local Module User's Manual

Connection to MELSEC iQ-R series

System configuration (Network Type: CC IE Field)

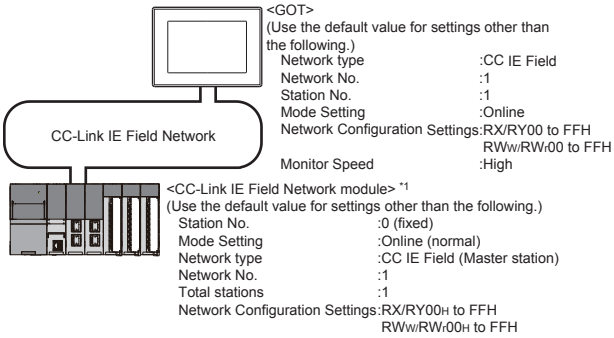

*1 The CC-Link IE Field Network module is mounted on slot 0 of the base unit.
The Start I/O No. of the CC-Link IE Field Network module is set at "0".

Module parameter settings of System configuration (Network Type: CC IE Field)

■[Module parameter] of GX Works3

- Module parameter

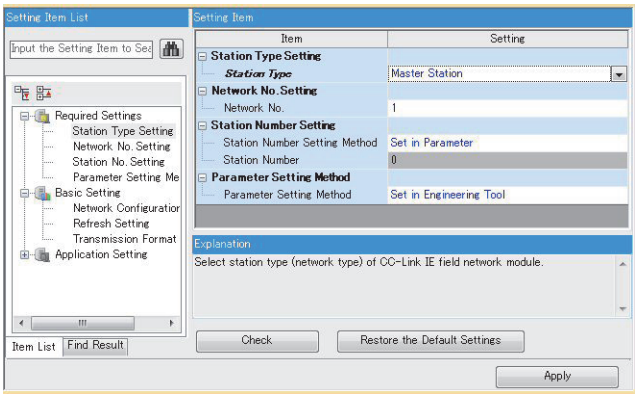

Item	Set value	Setting necessity at GOT connection
Station type	Master station (fixed)	○
Network No.*1	1	○
Station number setting	Parameter	○
Station No.	0 (fixed)	○
Parameter setting	Engineering tool	○
Network Configuration Settings	☞ • Network Configuration Settings	

○: Necessary △: As necessary ×: Not necessary

*1 Specify the same network No. as that of the GOT.

• Network Configuration Settings

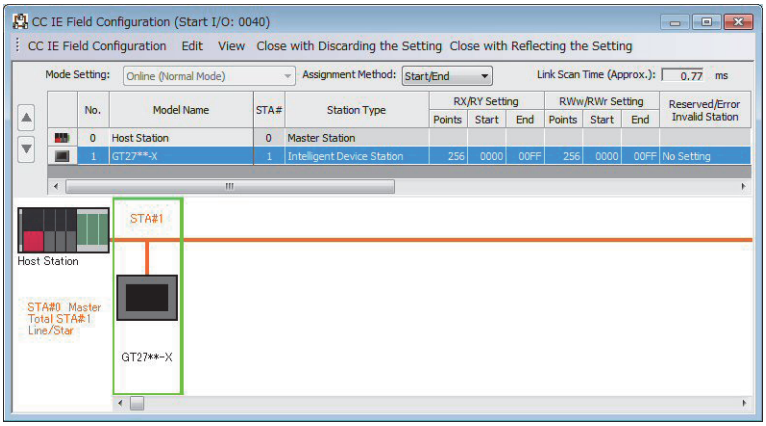

Item				Set value	Setting necessity at GOT connection
Rx/RY, RWw/RWr setting(1)*1	Rx/RY setting	Station No.1	Start	0000H	△
			End	00FFH	△
	RWw/RWr setting	Station No.1	Start	00000H	△
			End	00007H	△
Reserved/Error Invalid Station				No setting	△

○: Necessary △: As necessary ×: Not necessary

*1 Be sure to set it to perform the cyclic transmission.

Point

• When changing the module parameter

After writing module parameters to the PLC CPU, turn the PLC CPU OFF then back ON again, or reset the PLC CPU.

• GOT station type

Set the GOT as an intelligent device station.

• Routing setting

Up to 238 [Target Station Network No.]s can be set.

However, the same target station network number cannot be set twice or more (multiple times).

Therefore, the one that can access to other station from the request source host GOT is 238 kinds of [Target Station Network No.]s.

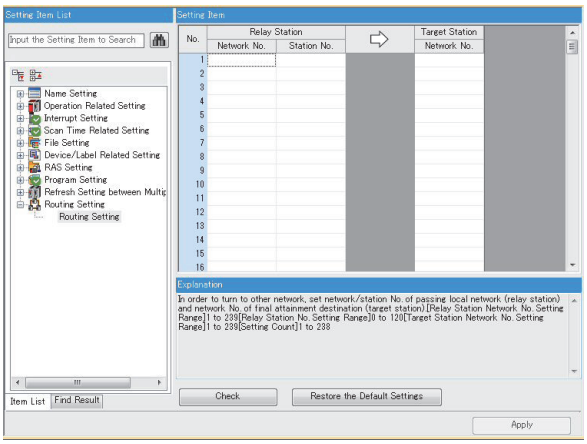

Item	Range
Target Station network No.	1 to 239
Relay Station network No.	1 to 239
Relay Station No.	0 to 120

Point

Routing parameter setting of request source

Routing parameter setting is also necessary for the request source GOT.

For the setting, refer to the following.

☞ Page 681 Routing parameter setting

GT Designer3 [Communication settings] of System configuration (Network Type: CC IE Field)

Item	Set value
Network Type	CC IE Field
Network No.	1: Network No.1
Station No.	1: Station No.1
Group No.	0 (fixed)
Mode Setting	Online
Refresh Interval	25ms (Use default value)
Input for Err. Sta.	Clear (Use default value)
Retry	3times (Use default value)
Timeout Time	3sec (Use default value)
Delay Time	0ms (Use default value)
Monitor Speed	High (Normal) (Use default value)

Point

[Controller Setting] of GT Designer3

For the setting method of [Controller Setting] of GT Designer3, refer to the following.

☞ Page 674 Setting communication interface (Controller Setting)

Connection to C Controller module (MELSEC iQ-R Series)

This section describes the settings of the GOT and C Controller module (MELSEC iQ-R Series) in the following case of system configuration.
Use CW Configurator for the C Controller module (MELSEC iQ-R Series) communication settings.

System configuration (Network Type: CC IE Field)

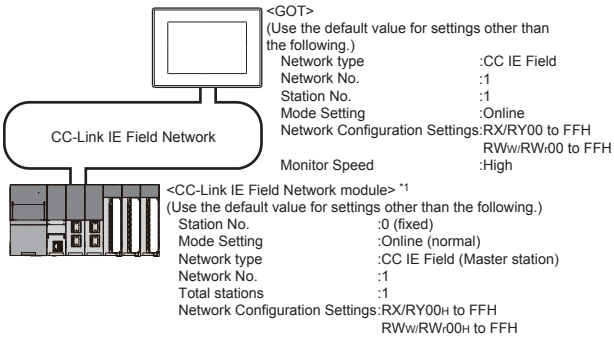

*1 The CC-Link IE Field Network module is mounted on slot 0 of the base unit.
The Start I/O No. of the CC-Link IE Field Network module is set at "0".

Module parameter settings of System configuration (Network Type: CC IE Field)

■[Module parameter] of CW Configurator

- Module parameter

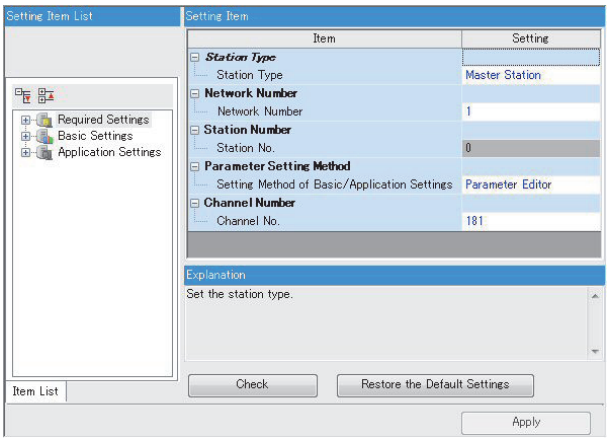

Item	Set value	Setting necessity at GOT connection
Station type	Master station (fixed)	○
Network No.*1	1	○
Station No.	0 (fixed)	○
Parameter setting	Parameter	○
Channel No.	(Use default value)	×
Network Configuration Settings	☞ • Network Configuration Settings	

○: Necessary △: As necessary ×: Not necessary

*1 Specify the same network No. as that of the GOT.

• Network Configuration Settings

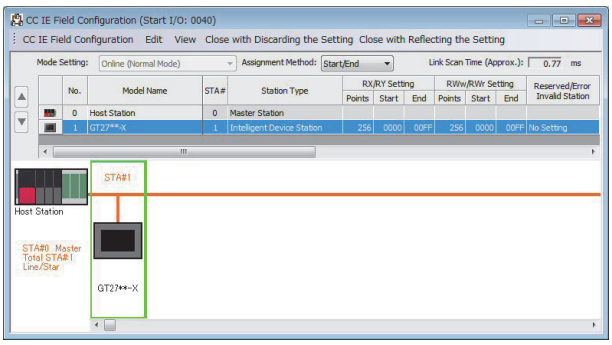

Item				Set value	Setting necessity at GOT connection
Rx/RY, RWw/RWr setting(1)*1	Rx/RY setting	Station No.1	Start	0000H	△
			End	00FFH	△
	RWw/RWr setting	Station No.1	Start	00000H	△
			End	00007H	△
Reserved/Error Invalid Station				No setting	△

○: Necessary △: As necessary ×: Not necessary

*1 Be sure to set it to perform the cyclic transmission.

Point

• When changing the module parameter

After writing module parameters to the PLC CPU, turn the PLC CPU OFF then back ON again, or reset the PLC CPU.

• GOT station type

Set the GOT as an intelligent device station.

• Routing setting

Up to 238 [Target Station Network No.]s can be set.

However, the same target station network number cannot be set twice or more (multiple times).

Therefore, the one that can access to other station from the request source host GOT is 238 kinds of [Target Station Network No.]s.

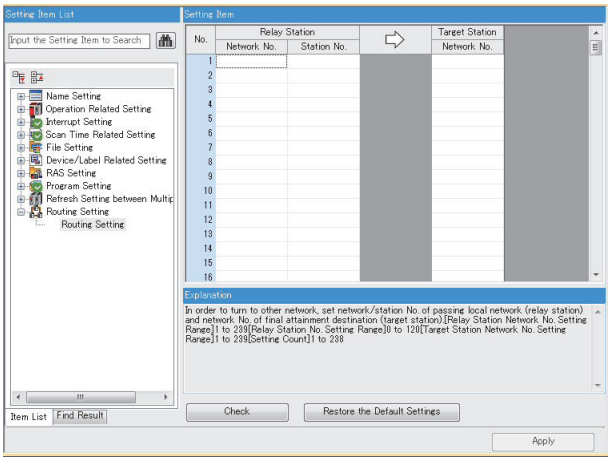

Item	Range
Target Station network No.	1 to 239
Relay Station network No.	1 to 239
Relay Station No.	0 to 120

Point

Routing parameter setting of request source

Routing parameter setting is also necessary for the request source GOT.

For the setting, refer to the following.

☞ Page 681 Routing parameter setting

GT Designer3 [Communication settings] of System configuration (Network Type: CC IE Field)

Item	Set value
Network Type	CC IE Field
Network No.	1: Network No.1
Station No.	1: Station No.1
Group No.	0 (fixed)
Mode Setting	Online
Refresh Interval	25ms (Use default value)
Input for Err. Sta.	Clear (Use default value)
Retry	3times (Use default value)
Timeout Time	3sec (Use default value)
Delay Time	0ms (Use default value)
Monitor Speed	High (Normal) (Use default value)

Point

[Controller Setting] of GT Designer3

For the setting method of [Controller Setting] of GT Designer3, refer to the following.

☞ Page 674 Setting communication interface (Controller Setting)

Connection to MELSEC-Q, L series

System configuration (Network Type: CC IE Field)

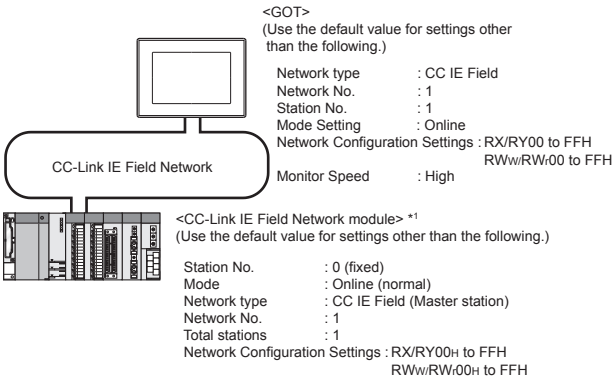

*1 The CC-Link IE Field Network module is mounted on slot 0 of the base unit.
The start I/O No. of the CC-Link IE Field Network module is set at [0].

Point

When connecting to Q170MCPU or Q170MSCPU(-S1)

When connected to Q170MCPU or Q170MSCPU(-S1), the start I/O No. of the CC-Link IE Field Network communication unit is set to "70".

Parameter settings (Connection to MELSEC-Q, QS series) of System configuration (Network Type: CC IE Field)

■Network parameter] of GX Works2

Use GX Works2 of Version 1.31H or later.

- Network parameter

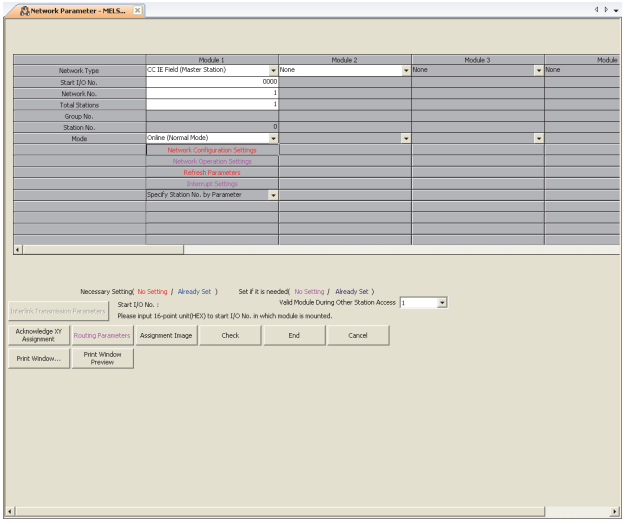

Item	Set value	Setting necessity at GOT connection
Network type	CC IE Field (Master station) (fixed)	○
Starting I/O No.*1	0000H	○
Network No.*2	1	○
Total stations	1	○
Station No.	0 (fixed)	○
Mode*3	Online (Normal mode)	○
Network Configuration Settings	☞ • Network Configuration Settings	△
Refresh parameters	(Use default value)	△
Interrupt settings		△
Interlink transmission parameters		×
Routing parameters	☞ • Routing parameter setting	△

○: Necessary △: As necessary ×: Not necessary

*1 When using Q170MCPU or Q170MSCPU(-S1), set it according to the system configuration.
*2 Specify the same network No. as that of the GOT.
*3 Set the same mode setting as that of the GOT.

• Network Configuration Settings

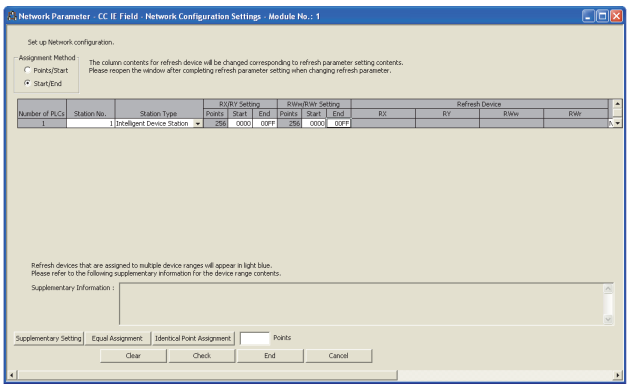

Item				Set value	Setting necessity at GOT connection
Rx/RY, RWw/RWr setting(1)*1	Rx/RY setting	Station No.1	Start	0000H	△
			End	00FFH	△
	RWw/RWr setting	Station No.1	Start	00000H	△
			End	000FFH	△
Reserved/Error Invalid Station				No setting	△

○: Necessary △: As necessary ×: Not necessary

*1 Be sure to set it to perform the cyclic transmission.

Point

• When changing the network parameter

After writing the network parameter to the PLC CPU, operate the PLC CPU ether turning OFF and then ON or resetting.

• GOT station type

Set the GOT as an intelligent device station.

• Routing parameter setting

Up to 64 [Transfer Network No.]s can be set.

However, the same transfer network number cannot be set twice or more (multiple times).

Therefore, the one that can access to other station from the request source host GOT is 64 kinds of [Transfer Network No.]s.

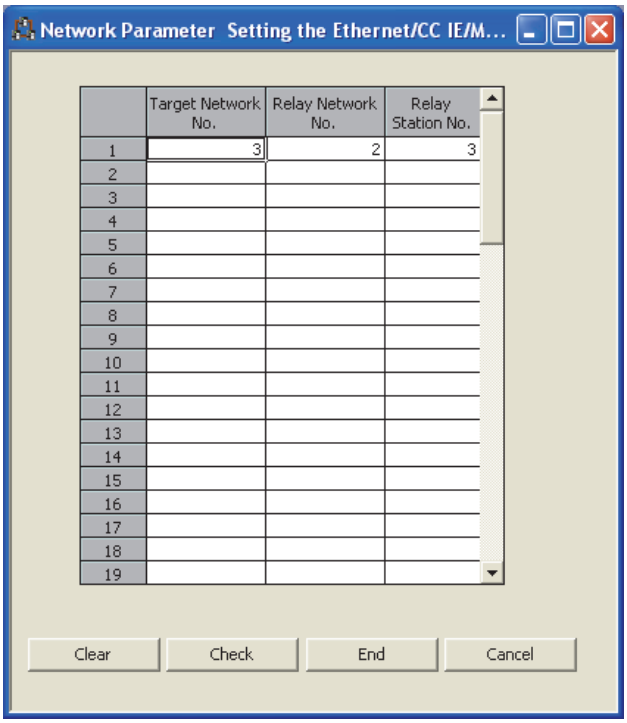

Item	Range
Transfer target network No.	1 to 239
Relay network No.	1 to 239
Relay station No.	0 to 120

Point

Routing parameter setting of request source

Routing parameter setting is also necessary for the request source GOT.

For the setting, refer to the following.

☞ Page 681 Routing parameter setting

GT Designer3 [Communication settings] of System configuration (Network Type: CC IE Field)

Item	Set value
Network Type	CC IE Field
Network No.	1: Network No.1
Station No.	1: Station No.1
Group No.	0 (fixed)
Mode Setting	Online
Refresh Interval	25ms (Use default value)
Input for Err. Sta.	Clear (Use default value)
Retry	3times (Use default value)
Timeout Time	3sec (Use default value)
Delay Time	0ms (Use default value)
Monitor Speed	High(Normal) (Use default value)

Point

[Controller Setting] of GT Designer3

For the setting method of [Controller Setting] of GT Designer3, refer to the following.

☞ Page 674 Setting communication interface (Controller Setting)

11.5 Precautions

GOT startup in CC-Link IE Field Network connection

For the CC-Link IE Field Network connection, the data link is started approximately 15 seconds after the GOT startup.

When a network error occurs in the system alarm

In the CC-Link IE Field Network connection, when a network error occurs in the system alarm, the system alarm display cannot be canceled even though the causes are removed.
To cancel the system alarm display, restart the GOT.

CC-Link IE Field Network module version

For version restrictions of the CC-Link IE Field Network module, refer to the following manual.
📖CC-Link IE Field Network Master/Local Module User's Manual

Connection to Q170MCPU or Q170MSCPU(-S1)

The Motion CPU area (CPU No.2) cannot be monitored.
Set [CPU No.] to 0 or 1.
The device of the PLC CPU area (CPU No. 1) is monitored.
For the setting of [CPU No.], refer to the following.
📖GT Designer3 (GOT2000) Screen Design Manual

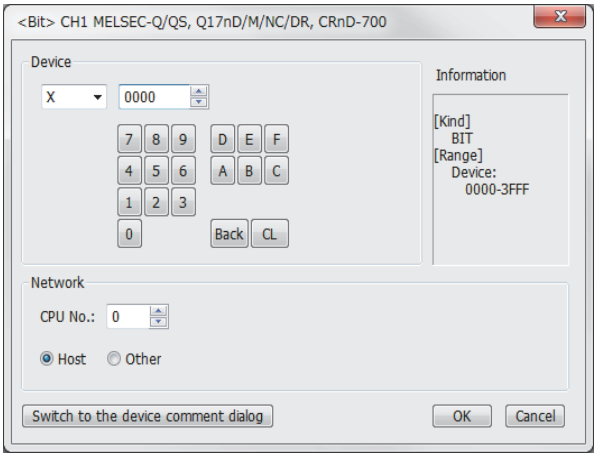

Data link failure in other stations at GOT startup

At GOT startup, the data link failure may occur in other stations.
However, after the failure occurrence, the GOT reconnects automatically and monitors the devices properly.
To avoid such data link failure, start up the GOT 10 seconds earlier than the master station.
However, if the master station does not complete startup when GOT starts monitoring (10 seconds after the GOT startup), the communication timeout occurs in the GOT side.
For details, refer to the following manual.
📖CC-Link IE Field Network Master/Local Module User's Manual

Data link failure in all stations at GOT startup or cable connection/disconnection

At GOT startup, the communication is broken temporarily between PORT1 and PORT2 in the CC-Link IE Field module which is installed on the GOT.
Thus, as the GOT or a station between the GOT and the master station is reconnected, the data link failure may occur on all stations.

Point

GOT startup
GOT startup indicates the startups after the following operations:
- Turning ON the GOT
- Resetting the GOT main unit
- Operating the utility
- Downloading the project including the communication settings
- Downloading the OS

When the output is required to be held at the data link failure

Set the GOT to hold the input from the data link faulty stations in the communication setting. Set "Input for Error Station" to "Hold".
☞ Page 675 Communication detail settings

Connection to RnSFCPU

The RnSFCPU takes 10 seconds or more to run.
If the GOT is started before the RnSFCPU runs, a system alarm occurs.
To prevent a system alarm from occurring, adjust the title display time in the [GOT Setup] dialog.
📖GT Designer3 (GOT2000) Screen Design Manual

Connecting one PLC with multiple GOTs

When multiple GOTs access one PLC simultaneously, writing (transient/cyclic) and reading (transient) data to/from the GOTs may slow down.
The following countermeasures can prevent this slowdown.
<Countermeasures>

■Improving the PLC's response speed

Insert a COM instruction on the PLC to increase the response speed. Note that caution is required as the scan time will increase.

■Designing screens using cyclic devices

Create screens using cyclic devices instead of transient devices.

■Splitting connection destinations of the GOTs into multiple systems

Add a master/local module to the PLC and split the connection destinations of the GOTs into multiple systems.Improve the current system configuration.
(Example of current system configuration)
In the following system configuration, the GOTs access one module.

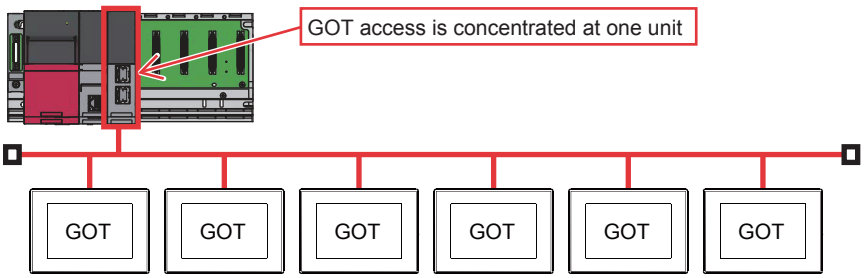

(Improvement measure)

- Adding a module to the PLC

Add a module to the PLC to disperse access destinations for the GOTs.

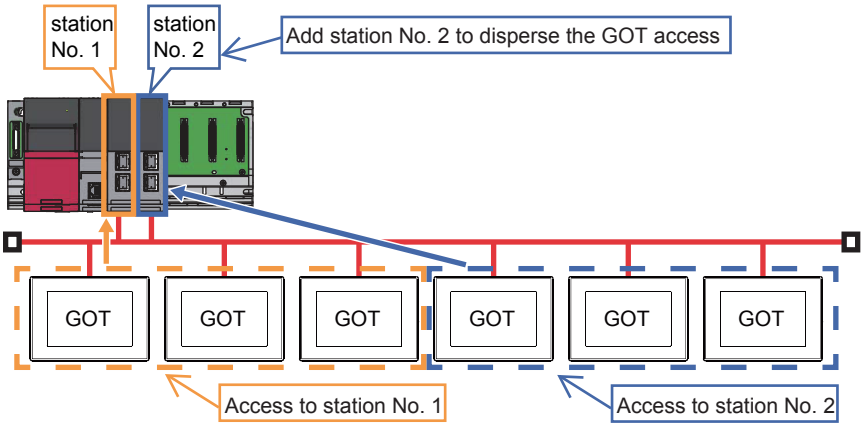

- Splitting the network

Split the network to disperse accesses from the GOTs.

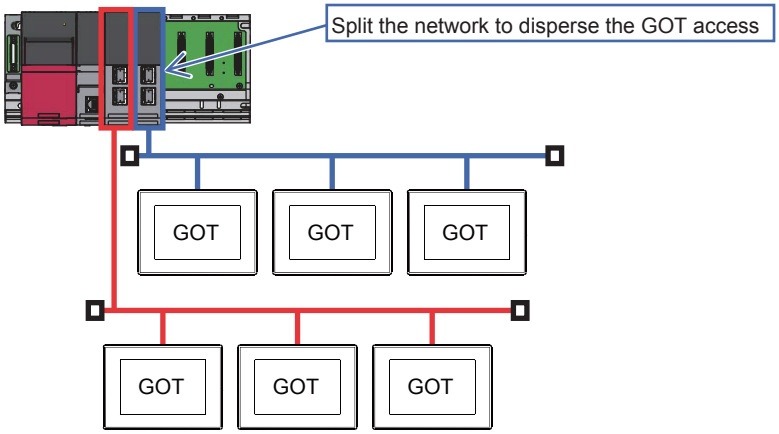

12 CC-Link CONNECTION (INTELLIGENT DEVICE STATION)

- Page 695 Connectable Model List
- Page 702 System Configuration
- Page 706 GOT Side Settings
- Page 712 PLC Side Setting
- Page 778 Precautions

12.1 Connectable Model List

PLC/Motion CPU

The following table shows the connectable models.

Series	Model name	Clock	Communication type	Connectable model	Refer to
MELSEC iQ-R Series	R00CPU	○	CC-Link(ID)	GT27 GT25	☞ Page 702 System Configuration
	R01CPU				
	R02CPU				
	R04CPU				
	R08CPU				
	R16CPU				
	R32CPU				
	R120CPU				
	R08PCPU*1				
	R16PCPU*1				
	R32PCPU*1				
	R120PCPU*1				
	R04ENCPU				
	R08ENCPU				
	R16ENCPU				
	R32ENCPU				
	R120ENCPU				
	R08PSFCPU *2				
	R16PSFCPU *2				
	R32PSFCPU *2				
	R120PSFCPU *2				
	R08SFCPU*3				
	R16SFCPU*3				
	R32SFCPU*3				
	R120SFCPU*3				
Motion CPU (MELSEC iQ-R Series)	R16MTCPU	○	CC-Link(ID)	GT27 GT25	☞ Page 702 System Configuration
	R32MTCPU				
	R64MTCPU				
C Controller module (MELSEC iQ-R Series)	R12CCPU-V	○	CC-Link(ID)	GT27 GT25	☞ Page 702 System Configuration
MELSECWinCPU (MELSEC iQ-R Series)	R102WCPU-W	×	CC-Link(ID)	GT27 GT25	☞ Page 702 System Configuration
CNC C80	R16NCCPU-S1	○	CC-Link(ID)	GT27 GT25	☞ Page 702 System Configuration
Robot controller (MELSEC iQ-R Series)	CR800-R(R16RTCPU)	○	CC-Link(ID)	GT27 GT25	☞ Page 702 System Configuration

Series	Model name	Clock	Communication type	Connectable model	Refer to
CC-Link IE Field Network head module	RJ72GF15-T2	×	CC-Link(ID)	-	-
MELSEC iQ-F Series	FX5U	○	CC-Link(ID)	GT 27 GT 25	☞ Page 702 System Configuration
	FX5UC				
	FX5UJ				
	FX5S	○	-	-	-
MELSEC-Q (Q mode)	Q00JCPU	○	CC-Link(ID)	GT 27 GT 25	☞ Page 702 System Configuration
	Q00CPU*4				
	Q01CPU*4				
	Q02CPU*4				
	Q02HCPU*4 Q06HCPU*4 Q12HCPU*4 Q25HCPU*4 Q02PHCPU Q06PHCPU Q12PHCPU Q25PHCPU				
	Q12PRHCPU (Main base)				
	Q25PRHCPU (Main base)				
	Q12PRHCPU (Extension base)				
	Q25PRHCPU (Extension base)				
	Q00UJCPU Q00UJCPU-S8				
	Q00UCPU Q01UCPU Q02UCPU Q03UDCPU				
	Q04UDHCPU Q06UDHCPU Q10UDHCPU Q13UDHCPU Q20UDHCPU Q26UDHCPU				
	Q03UDECPU Q04UDEHCPU Q06UDEHCPU Q10UDEHCPU Q13UDEHCPU Q20UDEHCPU Q26UDEHCPU Q50UDEHCPU Q100UDEHCPU				
	Q03UDVCPU Q04UDVCPU Q06UDVCPU Q13UDVCPU Q26UDVCPU				
C Controller module (Q Series)	Q12DCCPU-V*5	○	CC-Link(ID)	GT 27 GT 25	☞ Page 702 System Configuration
	Q24DHCCPU-V/VG				
	Q24DHCCPU-LS				
	Q26DHCCPU-LS				
MELSEC-QS	QS001CPU	○	-	-	-

Series	Model name	Clock	Communication type	Connectable model	Refer to
MELSEC-L	L02CPU	○	CC-Link(ID)	GT27 GT25	☞ Page 704 Connection with CC-Link Ver.2 compatible
	L06CPU				
	L26CPU				
	L26CPU-B				
	L02CPU-P				
	L06CPU-P				
	L26CPU-P				
	L26CPU-PBT				
	L02SCPU				
	L02SCPU-P				
MELSEC-Q (A mode)	Q02CPU-A	○	CC-Link(ID)	GT27 GT25	☞ Page 702 Connection with CC-Link Ver.1 compatible
	Q02HCPU-A				
	Q06HCPU-A				
MELSEC-QnA (QnACPU)	Q2ACPU	○	CC-Link(ID)	GT27 GT25	☞ Page 702 Connection with CC-Link Ver.1 compatible
	Q2ACPU-S1				
	Q3ACPU				
	Q4ACPU				
	Q4ARCPU				
MELSEC-QnA (QnASCPU)	Q2ASCPU	○	CC-Link(ID)	GT27 GT25	☞ Page 702 Connection with CC-Link Ver.1 compatible
	Q2ASCPU-S1				
	Q2ASHCPU				
	Q2ASHCPU-S1				
MELSEC-A (AnCPU)	A2UCPU	○	CC-Link(ID)	GT27 GT25	☞ Page 702 Connection with CC-Link Ver.1 compatible
	A2UCPU-S1				
	A3UCPU				
	A4UCPU				
	A2ACPU				
	A2ACPUP21				
	A2ACPUR21				
	A2ACPU-S1				
	A2ACPUP21-S1				
	A2ACPUR21-S1				
	A3ACPU				
	A3ACPUP21				
	A3ACPUR21				
	A1NCPU				
	A1NCPUP21				
	A1NCPUR21				
	A2NCPU				
	A2NCPUP21				
	A2NCPUR21				
	A2NCPU-S1				
	A2NCPUP21-S1				
	A2NCPUR21-S1				
	A3NCPU				
	A3NCPUP21				
	A3NCPUR21				

Series	Model name	Clock	Communication type	Connectable model	Refer to
MELSEC-A (AnSCPU)	A2USCPU	○	CC-Link(ID)	GT 27 GT 25	☞ Page 702 Connection with CC-Link Ver.1 compatible
	A2USCPU-S1				
	A2USHCPU-S1				
	A1SCPU				
	A1SCPUC24-R2				
	A1SHCPU				
	A2SCPU				
	A2SCPU-S1				
	A2SHCPU				
	A2SHCPU-S1				
	A1SJCPU				
	A1SJCPU-S3				
	A1SJHCPU				
MELSEC-A	A0J2HCPU	×	CC-Link(ID)	GT 27 GT 25	☞ Page 702 Connection with CC-Link Ver.1 compatible
	A0J2HCPUP21				
	A0J2HCPUR21				
	A0J2HCPU-DC24				
	A2CCPU	○	-	-	-
	A2CCPUP21				
	A2CCPUR21				
	A2CCPUC24				
	A2CCPUC24-PRF				
	A2CJCPU-S3				
	A1FXCPU				
Motion CPU (Q Series)	Q172CPU*6*7	○	CC-Link(ID)	GT 27 GT 25	☞ Page 702 System Configuration
	Q173CPU*6*7				
	Q172CPUN*6				
	Q173CPUN*6				
	Q172HCPU				
	Q173HCPU				
	Q172DCPU				
	Q173DCPU				
	Q172DCPU-S1				
	Q173DCPU-S1				
	Q172DSCPU				
	Q173DSCPU				
	Q170MCPU*8				
	Q170MSCPU*9				
	Q170MSCPU-S1*9				
	MR-MQ100	○	-	-	-

Series	Model name	Clock	Communication type	Connectable model	Refer to
Motion CPU (A Series)	A273UCPU	○	CC-Link(ID)	GT27 GT25	☞ Page 702 Connection with CC-Link Ver.1 compatible
	A273UHCPU				
	A273UHCPU-S3				
	A373UCPU				
	A373UCPU-S3				
	A171SCPU				
	A171SCPU-S3				
	A171SCPU-S3N				
	A171SHCPU				
	A171SHCPUN				
	A172SHCPU				
	A172SHCPUN				
	A173UHCPU				
	A173UHCPU-S1				
MELSEC-WS	WS0-CPU0	×	×	-	-
	WS0-CPU1				
	WS0-CPU3				
MELSECNET/H Remote I/O station	QJ72LP25-25	×	-	-	-
	QJ72LP25G				
	QJ72BR15				
CC-Link IE Field Network head module	LJ72GF15-T2	×	-	-	-
CC-Link IE Field Network Ethernet adapter module	NZ2GF-ETB	×	-	-	-
CNC C70	Q173NCCPU	○	CC-Link(ID)	GT27 GT25	☞ Page 702 System Configuration
Robot controller (Q Series)	CRnQ-700 (Q172DRCPU) CR750-Q (Q172DRCPU) CR751-Q (Q172DRCPU) CR800-Q (Q172DSRCPU)	○	CC-Link(ID)	GT27 GT25	☞ Page 702 System Configuration
MELSEC-FX	FX0	×	-	-	-
	FX0S				
	FX0N				
	FX1				
	FX2	×			
	FX2C				
	FX1S	○			
	FX1N				
	FX2N				
	FX1NC				
	FX2NC	×			
	FX3S	○			
	FX3G	○	CC-Link (ID)	GT27 GT25	☞ Page 702 System Configuration
	FX3GC				
	FX3GE				
	FX3U				
	FX3UC				

*1 Mount a redundant function module R6RFM next to the RnPCPU on the base unit when building a redundant system.
*2 Mount the SIL2 function module R6PSFM and redundant function module R6RFM next to the RnPSFCPU on the base unit.
*3 Mount a safety function module R6SFM next to the RnSFCPU on the base unit.
The RnSFCPU and the safety function module R6SFM must have the same pair version.
If their pair versions differ, the RnSFCPU does not operate.
*4 When in multiple CPU system configuration, use CPU function version B or later.
*5 Use a module with the upper five digits later than 12042.
*6 When using SV13, SV22, or SV43, use a Motion CPU with the following version of OS installed.
• SW6RN-SV13Q□: 00H or later
• SW6RN-SV22Q□: 00H or later
• SW6RN-SV43Q□: 00B or later
*7 Use main modules with the following product numbers.
• Q172CPU: Product number N******* or later
• Q173CPU: Product number M******* or later
*8 Only the first step can be used on the extension base unit (Q52B/Q55B).
*9 The extension base unit (Q5□B/Q6□B) can be used.

CC-Link module

CPU series	CC-Link module
MELSEC iQ-R Series Motion CPU (MELSEC iQ-R Series) C Controller module (MELSEC iQ-R Series) MELSECWinCPU (MELSEC iQ-R Series) CNC C80 CR800-R(R16RTCPU) CC-Link IE Field Network head module (MELSEC iQ-R Series)	RJ61BT11 *3
MELSEC-Q (Q mode) C Controller module (Q Series) Motion CPU (Q Series) CNC C70 Robot controller (CRnQ-700) CR800-Q (Q172DSRCPU)	QJ61BT11 QJ61BT11N
MELSEC-L	LJ61BT11
MELSEC-QnA (QnACPU) MELSEC-QnA (QnASCPU)	AJ61QBT11 *1 A1SJ61QBT11 *1*5
MELSEC-Q (A mode) MELSEC-A (AnCPU) MELSEC-A (AnSCPU) Motion CPU (A Series)	AJ61BT11 *1 A1SJ61BT11 *1*6
MELSEC iQ-F series *2 MELSEC-FX *4	FX3U-16CCL-M, FX5-CCL-MS

*1 Transient communication can be performed to only CC-Link modules of function version B or later and software version J or later.
*2 When using an FX3U-16CCL-M with the MELSEC iQ-F series, bus conversion module (FX5-CNV-BUS or FX5-CNV-BUSC) is required.
*3 Use firmware version 4 or higher when building a redundant system.
*4 MELSEC-FX do not support FX5-CCL-MS.
*5 Only available for MELSEC-QnA (QnASCPU).
*6 Only available for MELSEC-Q (A mode), MELSEC-A (AnSCPU), and Motion CPU (A series) small type.

12.2 System Configuration

Connection with CC-Link Ver.1 compatible

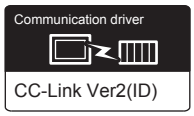

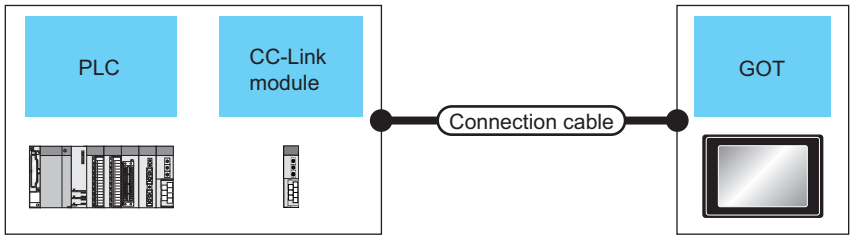

PLC			Connection cable		GOT		Number of connectable equipment
Model name	**CC-Link module*1**	**Communication type**	**Cable model**	**Max. distance**	**Option device*8**	**Model**	
MELSEC iQ-R Series Motion CPU (MELSEC iQ-R Series) C Controller module (MELSEC iQ-R Series) MELSECWinCPU (MELSEC iQ-R Series) CNC C80 CR800-R(R16RTCPU)	RJ61BT11	CC-Link (Ver.1)	CC-Link dedicated cable *2	*3	GT15-J61BT13 *5	GT27 GT25	26 GOTs
MELSEC-Q (Q mode) C Controller module (Q Series) Motion CPU (Q Series) CNC C70 Robot controller (CRnQ-700) CR800-Q (Q172DSRCPU)	QJ61BT11 QJ61BT11N						
MELSEC-L	LJ61BT11						
MELSEC-L (L26CPU-BT)	-						
MELSEC-QnA	AJ61QBT11 A1SJ61QBT11*4						
MELSEC-A	AJ61BT11 A1SJ61BT11*4						
MELSEC iQ-F series	FX5-CCL-MS FX3U-16CCL-M *6*7	CC-Link (Ver.1)	CC-Link dedicated cable *2	*3	GT15-J61BT13 *5	GT27 GT25	8 GOTs
MELSEC-FX	FX3U-16CCL-M *7						

*1 For the system configuration of the CC-Link module, refer to the following manuals.
📖CC-Link System Master/Local Module User's Manual QJ61BT11N
📖Control & Communication Link System Master/Local Module Type AJ61QBT11/A1SJ61QBT11 User's Manual
📖Control & Communication Link System Master/Local Module Type AJ61BT11/A1SJ61BT11 User's Manual
📖MELSEC-L CC-Link System Master/Local Module User's Manual

*2 For the specifications and inquiries of the CC-Link dedicated cable, refer to the following.
📖CC-Link Partner Association's home page: http://www.cc-link.org/

*3 The maximum overall extension cable length and the length between stations vary depending on the cable type to be used and the transmission speed.
For details, refer to the following manual.
📖CC-Link System Master/Local Module User's Manual QJ61BT11N
📖Control & Communication Link System Master/Local Module Type AJ61QBT11/A1SJ61QBT11 User's Manual
📖Control & Communication Link System Master/Local Module Type AJ61BT11/A1SJ61BT11 User's Manual
📖MELSEC-L CC-Link System Master/Local Module User's Manual
📖FX3U-16CCL-M USER'S MANUAL

*4 Transient transmission can be performed to only CC-Link modules of function version B or later and software version J or later.

*5 Specify Ver.1 as the mode setting in the Communication Settings to use it.
For details of the settings, refer to the following the manual.
☞ Page 706 Setting communication interface (Controller Setting)

*6 When using an FX3U-16CCL-M with the MELSEC iQ-F series, bus conversion module (FX5-CNV-BUS or FX5-CNV-BUSC) is required.

*7 FX3U-16CCL-M does not support FX5UJ and FX3S.

*8 GT25-W and GT2505-V do not support option devices.

Connection with CC-Link Ver.2 compatible

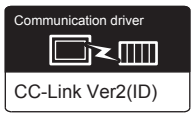

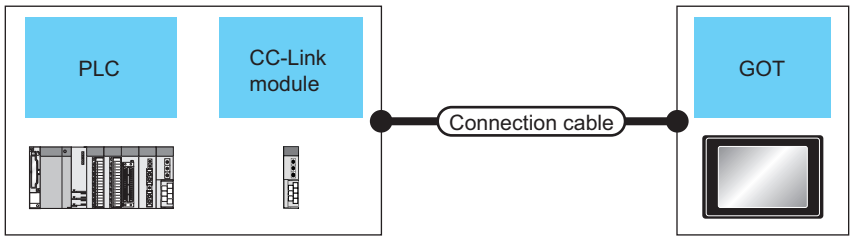

PLC			Connection cable		GOT		Number of connectable equipment
Model name	**CC-Link module*1**	**Communication type**	**Cable model**	**Max. distance**	**Option device*7**	**Model**	
MELSEC iQ-R Series Motion CPU (MELSEC iQ-R Series) C Controller module (MELSEC iQ-R Series) MELSECWinCPU (MELSEC iQ-R Series) CNC C80 CR800-R(R16RTCPU)	RJ61BT11	CC-Link (Ver.2)	CC-Link dedicated cable *2	*3	GT15-J61BT13 *4	GT27 GT25	26 GOTs
MELSEC-Q (Q mode) C Controller module (Q Series) Motion CPU (Q Series) CNC C70 Robot controller (CRnQ-700) CR800-Q (Q172DSRCPU)	QJ61BT11N						
MELSEC-L	LJ61BT11						
MELSEC-L (L26CPU-BT) (L26CPU-PBT)	-						
MELSEC iQ-F series	FX5-CCL-MS FX3U-16CCL-M *5*6	CC-Link (Ver.2)	CC-Link dedicated cable *2	*3	GT15-J61BT13 *4	GT27 GT25	8 GOTs
MELSEC-FX	FX3U-16CCL-M *6						

*1 For the system configuration of the CC-Link module, refer to the following manual.
📖CC-Link System Master/Local Module User's Manual QJ61BT11N
📖MELSEC-L CC-Link System Master/Local Module User's Manual

*2 For the specifications and inquiries of the CC-Link dedicated cable, refer to the following.
📖CC-Link Partner Association's home page: http://www.cc-link.org/

*3 The maximum overall extension cable length and the length between stations vary depending on the cable type to be used and the transmission speed.
For details, refer to the following manual.
📖CC-Link System Master/Local Module User's Manual QJ61BT11N
📖MELSEC-L CC-Link System Master/Local Module User's Manual
📖FX3U-16CCL-M USER'S MANUAL

*4 Specify Ver.2 as the mode setting in the Communication Settings to use it.
For details of the settings, refer to the following the manual.
☞ Page 706 Setting communication interface (Controller Setting)

*5 When using an FX3U-16CCL-M with the MELSEC iQ-F series, bus conversion module (FX5-CNV-BUS or FX5-CNV-BUSC) is required.

*6 FX3U-16CCL-M does not support FX5UJ and FX3S.

*7 GT25-W and GT2505-V do not support option devices.

Connection with CC-Link Ver.1/Ver.2 compatibles mixed

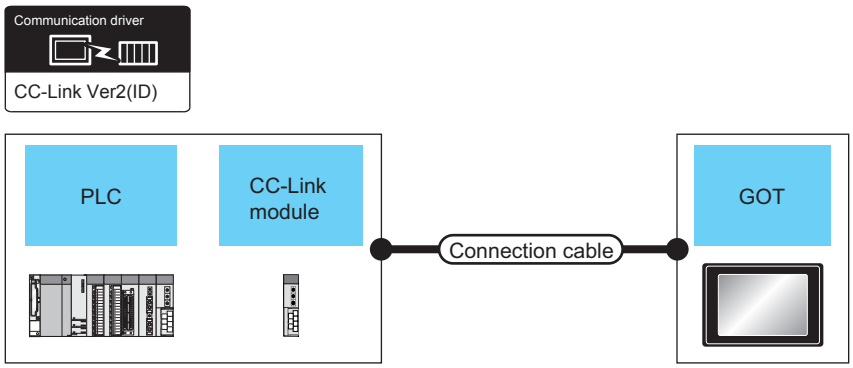

PLC			Connection cable		GOT		Number of connectable equipment
Model name	**CC-Link module*1**	**Communication type**	**Cable model**	**Max. distance**	**Option device*8**	**Model**	
MELSEC iQ-R Series Motion CPU (MELSEC iQ-R Series) C Controller module (MELSEC iQ-R Series) MELSECWinCPU (MELSEC iQ-R Series) CNC C80CR800-R(R16RTCPU)	RJ61BT11	CC-Link (Ver.2)	CC-Link dedicated cable*2	*3	GT15-J61BT13*4	GT27 GT25	26 GOTs
		CC-Link (Ver.1)	CC-Link dedicated cable*2	*3	GT15-J61BT13*5	GT27 GT25	
MELSEC-Q (Q mode) C Controller module (Q Series) Motion CPU (Q Series) CNC C70 Robot controller (CRnQ-700) CR800-Q (Q172DSRCPU)	QJ61BT11N	CC-Link (Ver.2)	CC-Link dedicated cable*2	*3	GT15-J61BT13*4	GT27 GT25	
		CC-Link (Ver.1)	CC-Link dedicated cable*2	*3	GT15-J61BT13*5	GT27 GT25	
MELSEC iQ-F series	FX5-CCL-MS FX3U-16CCL-M *6*7	CC-Link (Ver.2)	CC-Link dedicated cable*2	*3	GT15-J61BT13*4	GT27 GT25	8 GOTs
MELSEC-FX	FX3U-16CCL-M *7	CC-Link (Ver.1)	CC-Link dedicated cable*2	*3		GT27 GT25	

*1 For the system configuration of the CC-Link module, refer to the following manual.
📖CC-Link System Master/Local Module User's Manual QJ61BT11N

*2 For the specifications and inquiries of the CC-Link dedicated cable, refer to the following.
📖CC-Link Partner Association's home page: http://www.cc-link.org/

*3 The maximum overall extension cable length and the length between stations vary depending on the cable type to be used and the transmission speed.
For details, refer to the following manual.
📖CC-Link System Master/Local Module User's Manual QJ61BT11N
📖FX3U-16CCL-M USER'S MANUAL

*4 Specify Ver.2 as the mode setting in the Communication Settings to use it.
For details of the settings, refer to the following the manual.
☞ Page 706 Setting communication interface (Controller Setting)

*5 Specify Ver.1 as the mode setting in the Communication Settings to use it.
For details of the settings, refer to the following the manual.
☞ Page 706 Setting communication interface (Controller Setting)

*6 When using an FX3U-16CCL-M with the MELSEC iQ-F series, bus conversion module (FX5-CNV-BUS or FX5-CNV-BUSC) is required.

*7 FX3U-16CCL-M does not support FX5UJ and FX3S.

*8 GT25-W and GT2505-V do not support option devices.

12.3 GOT Side Settings

Setting communication interface (Controller Setting)

Set the channel of the connected equipment.

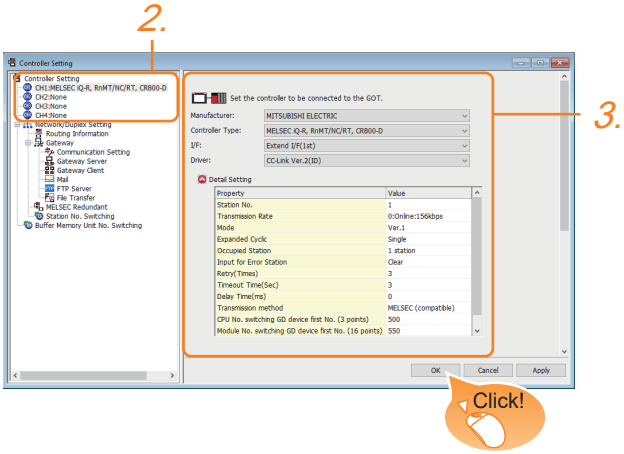

1. Select [Common] → [Controller Setting] from the menu.

2. In the [Controller Setting] window, select the channel No. to be used from the list menu.

3. Set the following items.

- [Manufacturer]: [MITSUBISHI ELECTRIC]
- [Controller Type][*1]: Configure the setting according to the controller to be connected.
- [I/F]: Interface to be used
- [Driver]: [CC-Link Ver.2(ID)]
- [Detail Setting]: Configure the settings according to the usage environment.

☞ Page 707 Communication detail settings

*1 In the case of MELSEC iQ-F series or MELSEC-FX, set to any of the following items.
[MELSEC iQ-R,RnMT]
[MELSEC-Q/QS, Q17nD/M/NC/DR/DSR, CRnD-700]
[MELSEC-QnA,MELDAS C6*]
[MELSEC-L]
[MELSEC-A]

4. When you have completed the settings, click the [OK] button.

Point

The settings of connecting equipment can be confirmed in [I/F Communication Setting].
For details, refer to the following.
☞ Page 54 I/F communication setting

Communication detail settings

Make the settings according to the usage environment.

Property	Value
Station No.	1
Transmission Rate	0:Online:156kbps
Mode	Ver.1
Expanded Cyclic	Single
Occupied Station	1 station
Input for Error Station	Clear
Retry(Times)	3
Timeout Time(Sec)	3
Delay Time(ms)	0
Transmission method	MELSEC (compatible)
CPU No. switching GD device first No. (3 points)	500
Module No. switching GD device first No. (16 points	550
Servo axis switching GD device first No. (16 points)	10

Item	Description	Range
Station No.	Set the station No. of the GOT. (Default: 1)	1 to 64
Transmission Rate*1	Set the transmission speed and the mode of the GOT. (Default: 0)	0 to E
Mode	Set the mode of CC-Link. (Default: Ver.1)	Ver.1/Ver.2/Additional/Offline
Expanded Cyclic	Set the cyclic point expansion. (Default: Single)	Single/Double/Quadruple/Octuple
Occupied Station	Set the number of stations occupied by the GOT. (Default: 1 Station)	1 Station/4 Stations
Input for Error Station	Set Clear/Hold at an error occurrence. (Default: Clear)	Clear/Hold
Retry	Set the number of retries to be performed when a communication timeout occurs. When no response is received after retries, a communication times out. (Default: 3times)	0 to 5times
Timeout Time	Set the time period for a communication to time out. (Default: 3sec)	3 to 90sec
Delay Time	Set the delay time for reducing the load of the network/destination PLC. (Default: 0ms)	0 to 300 (ms)
Transmission method*2	Set the transmission method of CC-Link. (Default: MELSEC (compatible))	MELSEC (compatible), Cyclic
CPU No. switching GD device first No. (3 points)	Set the start device number of the GD devices for CPU No. switching. (Default: 500) For the details, refer to the following. ☞ Page 709 Start device number of the GD devices for CPU number switching	0 to 65520
Module No. switching GD device first No. (16 points)	Set the start device number of the GD devices for module No. switching. (Default: 550) For the details, refer to the following. ☞ Page 710 Start device number of the GD devices for module number switching	0 to 65520
Servo axis switching GD device first No. (16 points)	Set the servo axis switching GD device first No. (Default: 10) For the details, refer to the following. ☞ Page 711 Servo axis switching GD device first No.	0 to 65520

*1 Transmission speed settings
The following lists the transmission speed settings of the CC-Link communication.

Set value	Description
0	Online: 156kbps
1	Online: 625kbps
2	Online: 2.5Mbps
3	Online: 5Mbps
4	Online: 10Mbps
5	Line test: 156kbps
6	Line test: 625kbps
7	Line test: 2.5Mbps
8	Line test: 5Mbps
9	Line test: 10Mbps
A	Hardware test: 156kbps
B	Hardware test: 625kbps
C	Hardware test: 2.5Mbps
D	Hardware test: 5Mbps
E	Hardware test: 10Mbps

For details of the hardware test, refer to the following manual.
📖CC-Link System Master/Local Module User's Manual for CC-Link module to be used

*2 In the case of MELSEC iQ-F series or MELSEC-FX, Transmission method is set to "cyclic".

Point

• Communication interface setting by Utility
The communication interface setting can be changed on the Utility's [Communication Settings] after writing [Controller Setting] of project data.
For details on the Utility, refer to the following manual.
📖GOT2000 Series User's Manual (Utility)
• Precedence in communication settings
When settings are made by GT Designer3 or the Utility, the latest setting is effective.

Start device number of the GD devices for CPU number switching

■Specifying a CPU number with a device

[CPU No.] can be specified with the GOT internal registers (GD devices) by specifying a value (100 to 102) to [CPU No.] in the device setting dialog in GT Designer3.

Set the start device number of the GD devices to be used in [CPU No. switching GD device first No. (3 points)].

Specify [CPU No.] with the three consecutive GD devices, starting the set device number.

When [500] is set to [CPU No. switching GD device first No. (3 points)], GD500 to GD502 are used to specify [CPU No.] as shown in the following table.

CPU No.	GD device	Setting range
100	GD500	1 to 4 Setting an invalid value causes a communication timeout error. Specifying a nonexistent CPU No. or a CPU No. not supporting a multiple CPU system with a device causes a controller error.
101	GD501	
102	GD502	

■Specifying a CPU number with a device on the initially-displayed screen

Set [CPU No. switching GD device first No. (3 points)] so that the values of the GD devices are retained and monitored upon the GOT startup.

■Specifying a CPU number with a device in a multi-channel connection

If the setting range of [CPU No. switching GD device first No. (3 points)] set in each channel overlaps, the monitoring target CPU No. set to each channel is switched simultaneously.

Set [CPU No. switching GD device first No. (3 points)] in each channel so that the setting range does not overlap.

■Specifying a CPU number and a station number with devices in a multi-channel connection

When GD10 to GD25 are used to specify the station No. of an inverter or non-Mitsubishi temperature controller connected, setting [10] to [CPU No. switching GD device first No. (3 points)] in a different channel switches the monitoring target CPU No. and station No. of an inverter or non-Mitsubishi temperature controller set to each channel simultaneously.

Set [CPU No. switching GD device first No. (3 points)] so that the setting range does not overlap the station No. of an inverter or non-Mitsubishi temperature controller.

Start device number of the GD devices for module number switching

■Specifying a module number with a device

In a connection via a simple motion module, [Unit No.] can be specified with the GOT internal registers (GD devices) by specifying a value (100 to 10F) to [Unit No.] in the device setting dialog in GT Designer3.
Set the start device number of the GD devices to be used in [Module No. switching GD device first No. (16 points)].
Specify [Unit No.] with the 16 consecutive GD devices, starting the set device number.
When [550] is set to [Module No. switching GD device first No. (16 points)], GD550 to GD565 are used to specify [Unit No.] as shown in the following table.

Unit No.	GD device	Setting range
100	GD550	The setting range depends on [Unit Type]. • When [MELSEC iQ-R, RnMT/NC/RT, CR800-D], [MELSEC iQ-R, RnMT/RT, CR800-D], [MELSEC-Q/QS, Q17nD/M/NC/DR/DSR, CRnD-700], [MELSEC-Q, Q17nD/M/DR/DSR, CRnD-700], [MELSEC-L] or [MELIPC] is selected for [Unit Type] 00 to FF • When [MELSEC iQ-F] is selected for [Unit Type] 01 to 10 Setting an invalid value causes a device range error.
101	GD551	
102	GD552	
103	GD553	
104	GD554	
105	GD555	
106	GD556	
107	GD557	
108	GD558	
109	GD559	
10A	GD560	
10B	GD561	
10C	GD562	
10D	GD563	
10E	GD564	
10F	GD565	

■Specifying a module number with a device on the initially-displayed screen

Set [Module No. switching GD device first No. (16 points)] so that the values of the GD devices are retained and monitored upon the GOT startup.

■Specifying a module number with a device in a multi-channel connection

If the setting range of [Module No. switching GD device first No. (16 points)] set in each channel overlaps, the module No. of the simple motion module via the servo amplifier device of each channel is switched simultaneously.
Set [Module No. switching GD device first No. (16 points)] for each channel so that the setting range does not overlap.

■Specifying a station number and a module number with devices in a multi-channel connection

When GD10 to GD25 are used to specify the station No. of an inverter or non-Mitsubishi temperature controller connected, setting [10] to [Module No. switching GD device first No. (16 points)] switches the module No. of the simple motion module via the servo amplifier device and the station No. of an inverter or non-Mitsubishi temperature controller set to each channel simultaneously.
Set [Module No. switching GD device first No. (16 points)] so that the setting range does not overlap the station No. of an inverter or non-Mitsubishi temperature controller.

Servo axis switching GD device first No.

■Indirect specification of the servo axis No.

In a connection via a Motion CPU or Simple Motion module, a servo axis No. can be indirectly specified with GOT internal registers (GD devices) by specifying a value (100 to 115) to the axis No. of the servo amplifier device.
Set the start device number of the GD devices to be used in [Servo axis switching GD device first No. (16 points)].
Specify a servo axis number with 16 consecutive GD devices, starting the set device number.
When [10] is set to [Servo axis switching GD device first No. (16 points)], GD10 to GD25 are used to specify a servo axis number as shown in the following table.

Servo axis No.	GD device	Setting range
100	GD10	1 to 64 Setting an invalid value causes a device range error.
101	GD11	
102	GD12	
103	GD13	
104	GD14	
105	GD15	
106	GD16	
107	GD17	
108	GD18	
109	GD19	
110	GD20	
111	GD21	
112	GD22	
113	GD23	
114	GD24	
115	GD25	

■Specifying a servo axis number with a device on the initially-displayed screen

Set [Servo axis switching GD device first No. (16 points)] so that the values of the GD devices are retained and monitored upon the GOT startup.

■Specifying a servo axis number with a device in a multi-channel connection

If the setting rage of [Servo axis switching GD device first No. (16 points)] set in each channel overlaps, the axis No. of the servo amplifier of each channel is switched simultaneously.
Set [Servo axis switching GD device first No. (16 points)] for each channel so that the setting range does not overlap.

■Specifying a station number and a servo axis number with devices in a multi-channel connection

When GD10 to GD25 are used to specify the station No. of an inverter or non-Mitsubishi temperature controller connected, setting [10] to [Servo axis switching GD device first No. (16 points)] switches the axis No. of the servo amplifier and the station No. of an inverter or non-Mitsubishi temperature controller set to each channel simultaneously.
Set [Servo axis switching GD device first No. (16 points)] so that the setting range does not overlap the station No. of an inverter or non-Mitsubishi temperature controller.

12.4 PLC Side Setting

The GOT operates as the stations of which are shown below in the CC-Link system.

Station data	Description
Station type	Intelligent device station, Ver.1 intelligent device station or Ver.2 intelligent device station
Number of stations occupied	Station 1 or Station 4

The switch settings and parameter settings of the PLC side (CC-Link module) are described in 12.4.5 to 12.4.11.

Model name			Refer to
CC-Link module (MELSEC iQ-R Series)	Connecting with Ver.1 compatible	RJ61BT11	☞ Page 714 Connection to MELSEC iQ-R Series with Ver.1 compatible
	Connecting with Ver.2 compatible	RJ61BT11	☞ Page 717 Connection to MELSEC iQ-R Series with Ver.2 compatible
	Connecting with Ver.1/Ver.2 compatibles mixed	RJ61BT11	☞ Page 720 Connection to MELSEC iQ-R Series with Ver.1/Ver.2 compatibles mixed
CC-Link module (Q Series)	Connecting with Ver.1 compatible	QJ61BT11, QJ61BT11N	☞ Page 726 Connection to MELSEC-Q Series with Ver.1 compatible
	Connecting with Ver.2 compatible	QJ61BT11N	☞ Page 732 Connection to MELSEC-Q Series with Ver.2 compatible
	Connecting with Ver.1/Ver.2 compatibles mixed	QJ61BT11N	☞ Page 738 Connection to MELSEC-Q Series with Ver.1/Ver.2 compatibles mixed
CC-Link module (QnA Series)		AJ61QBT11, A1SJ61QBT11	☞ Page 751 Connection to MELSEC-QnA series
CC-Link module (A Series)		AJ61BT11, A1SJ61BT11	☞ Page 759 Connection to MELSEC-A series
CC-Link module (MELSEC iQ-F Series, MELSEC-FX)	Connecting with Ver.1/Ver.2 compatibles mixed	FX3U-16CCL-M	☞ Page 768 Connection to MELSEC iQ-F and MELSEC-FX Series with Ver.1/Ver.2 compatibles mixed
CC-Link module (MELSEC iQ-F Series)	Ver.1/Ver.2 compatibles mixed	FX5-CCL-MS	☞ Page 775 Connection to MELSEC iQ-F Series with Ver.1/Ver.2 compatibles mixed

Point

Number of stations occupied

The number of stations occupied is setting for determining number of link device points (RX/RY/RWw/RWr) used by the GOT.

To use multiple numbers of link device points in the case of cyclic transmission between the GOT and CC-Link module, set the number of stations occupied as the exclusive station 4.

The number of link device points at the exclusive station 1 and 4 is shown below.

• CC-Link Ver.2

Link device	Expanded cyclic setting							
	Single		Double		Quadruple		Octuple	
	Exclusive station 1	Exclusive station 4	Exclusive station 1	Exclusive station 4	Exclusive station 1	Exclusive station 4	Exclusive station 1	Exclusive station 4
Remote input (RX)	32 points	128 points	32 points	224 points	64 points	448 points	128 points	896 points
Remote output (RY)	32 points	128 points	32 points	224 points	64 points	448 points	128 points	896 points
Remote register (RWw)	4 points	16 points	8 points	32 points	16 points	64 points	32 points	128 points
Remote register (RWr)	4 points	16 points	8 points	32 points	16 points	64 points	32 points	128 points

• CC-Link Ver.1

Link device	Number of stations occupied	
	Exclusive station	Exclusive station 4
Remote input (RX)	32 points	128 points
Remote output (RY)	32 points	128 points
Remote register (RWw)	4 points	16 points
Remote register (RWr)	4 points	16 points

Connection to MELSEC iQ-R Series with Ver.1 compatible

This section describes the settings of the GOT and the CC-Link module (MELSEC iQ-R Series) with Ver.1 compatible in the following system configuration.

Point

CC-Link module (MELSEC iQ-R Series)

For details of the CC-Link module (MELSEC iQ-R Series), refer to the following manual.

Manuals of MELSEC iQ-R Series

System configuration

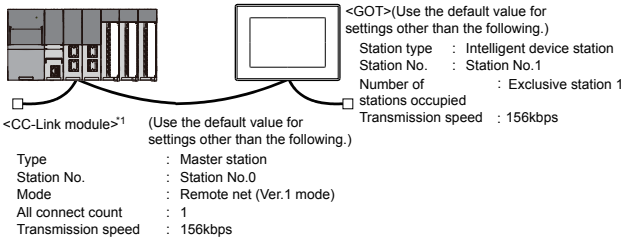

*1 The CC-Link module is mounted on the base unit slot 0.
The Start I/O No. of the CC-Link module is set to "0".

Point

When the switch setting is changed

Turn the PLC CPU OFF then ON again, or reset the PLC CPU.

Module parameter setting of GX Works3

■[Module parameter] of GX Works3

- Module parameter

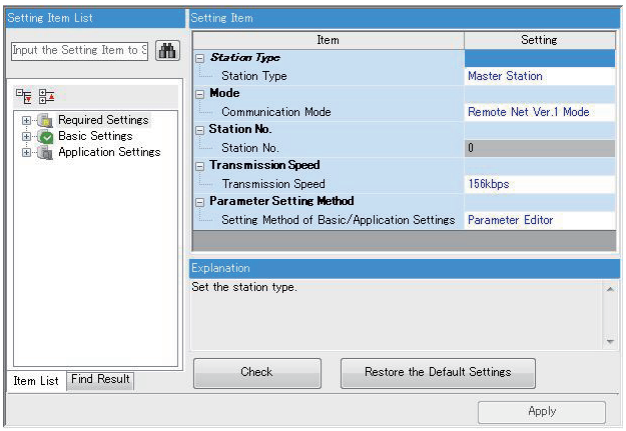

Item	Set value	Setting necessity at GOT connection
Station type	Master station	○
Mode	Remote net (Ver.1 mode)	○
Station No.	0 (fixed)	△
Transmission speed*1	156kbps	○
Parameter setting	Parameter	×

○: Necessary △: As necessary ×: Not necessary

*1 Adjust the settings with GOT settings.

• Link refresh setting

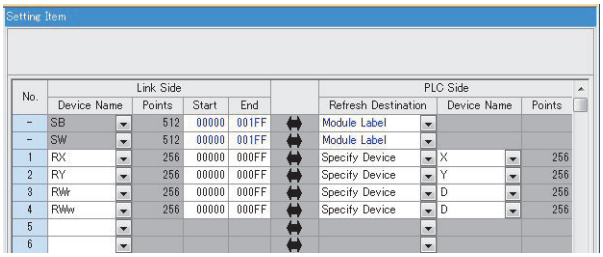

Item	Set value	Setting necessity at GOT connection
Special relay (SB) refresh device	-	△
Special register (SW) refresh device	-	△
Remote input (RX) refresh device	Set as necessary.	△
Remote output (RY) refresh device		△
Remote register (RWr) refresh device		△

○: Necessary △: As necessary ×: Not necessary

• CC-Link configuration setting

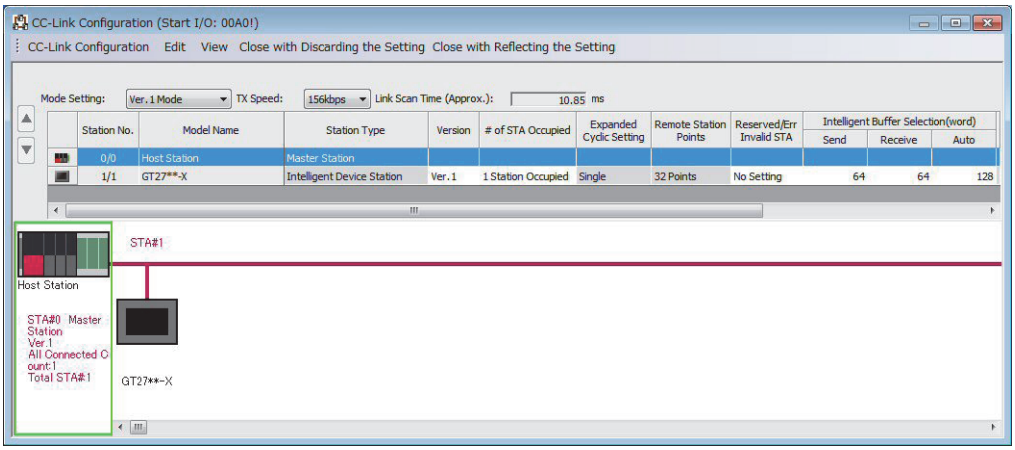

Item*1	Set value	Setting necessity at GOT connection
Station type	Intelligent device station (fixed)	○
Exclusive station count*2	Exclusive station 1	○
Reserve/invalid station select	No setting	○
Intelligent buffer select (word)	(Use default value)	×

○: Necessary △: As necessary ×: Not necessary

*1 When the [Mode] of the CC-Link module is set at [Remote net - (Ver. 1 mode)], [Remote station points] cannot be set.

*2 Set the same setting as that of the GOT.

Point

When changing the module parameter

After writing module parameters to the PLC CPU, turn the PLC CPU OFF then back ON again, or reset the PLC CPU.

[Controller Setting] of GT Designer3

Item	Set value
Station No.	1: Station No.1
Transmission Rate	0: Online 156kbps
Mode	Ver.1: Remote net (Ver.1 mode)
Expanded Cyclic	Single (Use default value)
Number of stations occupied	1 Station
Input for Error Station	0: Clear
Retry	3times (Use default value)
Timeout Time	3sec (Use default value)
Delay Time	0ms (Use default value)
Transmission method	MELSEC (compatible)

Point

[Controller Setting] of GT Designer3

For the setting method of [Controller Setting] of GT Designer3, refer to the following.

☞ Page 706 Setting communication interface (Controller Setting)

Connection to MELSEC iQ-R Series with Ver.2 compatible

This section describes the settings of the GOT and the CC-Link module (MELSEC iQ-R Series) with Ver.2 compatible in the following system configuration.

Point

CC-Link module (MELSEC iQ-R Series)

For details of the CC-Link module (MELSEC iQ-R Series), refer to the following manual.

Manuals of MELSEC iQ-R Series

System configuration

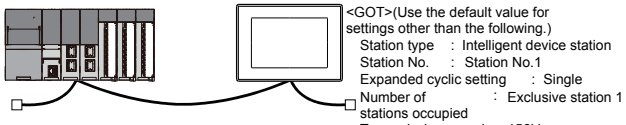

*1 The CC-Link module is mounted on the base unit slot 0.
The Start I/O No. of the CC-Link module is set to "0".

Module parameter setting of GX Works3

■[Module parameter] of GX Works3

- Module parameter

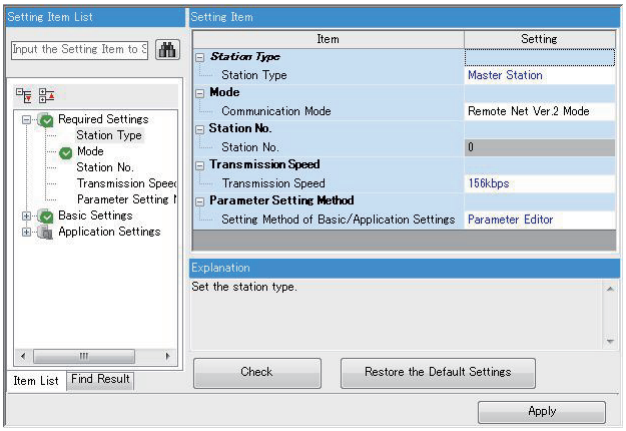

Item	Set value	Setting necessity at GOT connection
Station type	Master station	○
Mode	Remote net (Ver.2 mode)	○
Station No.	0 (fixed)	△
Transmission speed*1	156kbps	○
Parameter setting	Parameter	×

○: Necessary △: As necessary ×: Not necessary

*1 Adjust the settings with GOT settings.

• Link refresh setting

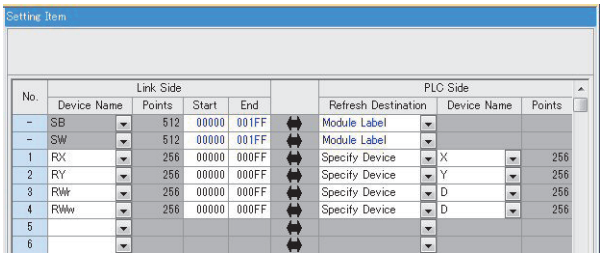

Item	Set value	Setting necessity at GOT connection
Special relay (SB) refresh device	-	△
Special register (SW) refresh device	-	△
Remote input (RX) refresh device	Set as necessary.	△
Remote output (RY) refresh device		△
Remote register (RWr) refresh device		△

○: Necessary △: As necessary ×: Not necessary

• CC-Link configuration setting

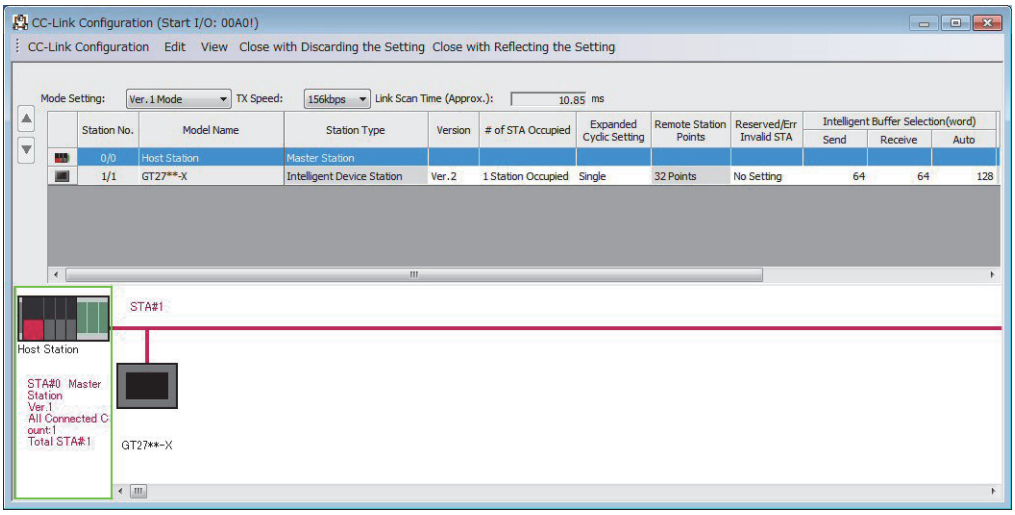

Item*1	Set value	Setting necessity at GOT connection
Station type	Ver.2 intelligent device station (fixed)	○
Expanded cyclic setting*2	Single	○
Exclusive station count*2	Exclusive station 1	○
Remote station points	32 points (fixed)	○
Reserve/invalid station select	No setting	○
Intelligent buffer select (word)	(Use default value)	×

○: Necessary △: As necessary ×: Not necessary

*1 When the [Mode] of the CC-Link module is set at [Remote net - (Ver. 2 mode)], [Remote station points] can be set.
[Remote station points] is a setting for the remote I/O station.
The default value (32 points) must be used on the GOT.

*2 Set the same setting as that of the GOT.

Point

When changing the module parameter

After writing module parameters to the PLC CPU, turn the PLC CPU OFF then back ON again, or reset the PLC CPU.

[Communication settings] of GT Designer3

Item	Set value
Station No.	1: Station No.1
Transmission Rate	0: Online 156kbps
Mode	Ver.2: Remote net (Ver.2 mode)
Expanded Cyclic	Single
Number of stations occupied	1 Station
Input for Error Station	0: Clear
Retry	3times (Use default value)
Timeout Time	3sec (Use default value)
Delay Time	0ms (Use default value)
Transmission method	MELSEC (compatible)

Point

[Controller Setting] of GT Designer3

For the setting method of [Controller Setting] of GT Designer3, refer to the following.

☞ Page 706 Setting communication interface (Controller Setting)

Connection to MELSEC iQ-R Series with Ver.1/Ver.2 compatibles mixed

This section describes the setting of the GOT and CC-Link module (MELSEC iQ-R Series) with Ver.1/Ver.2 compatibles mixed in the following system configuration.

Point

CC-Link module (MELSEC iQ-R Series)

For details of the CC-Link module (MELSEC iQ-R Series), refer to the following manual.

Manuals of MELSEC iQ-R Series

System configuration

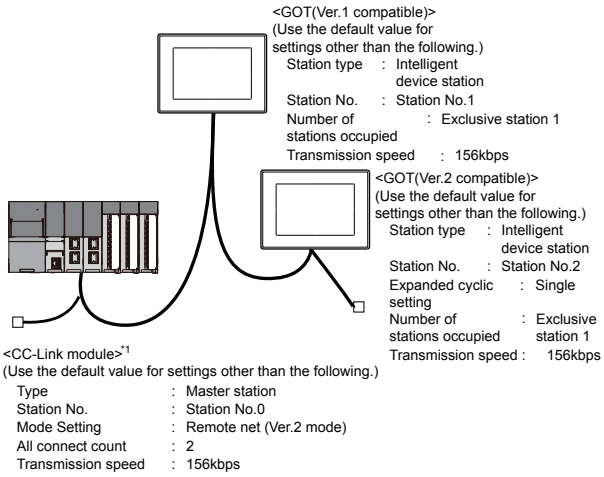

*1 The CC-Link module is mounted on the base unit slot 0.
The Start I/O No. of the CC-Link module is set to "0".

Module parameter setting of GX Works3

■[Module parameter] of GX Works3

- Module parameter

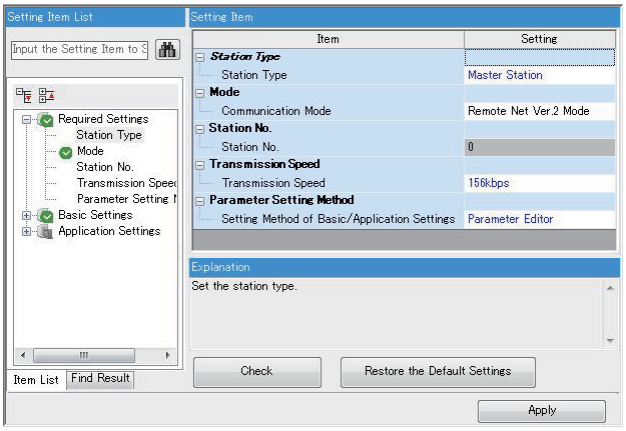

Item	Set value	Setting necessity at GOT connection
Station type	Master station	○
Mode	Remote net (Ver.2 mode)	○
Station No.	0 (fixed)	△
Transmission speed*1	156kbps	○
Parameter setting	Parameter	×

○: Necessary △: As necessary ×: Not necessary

*1 Adjust the settings with GOT settings.

• Link refresh setting

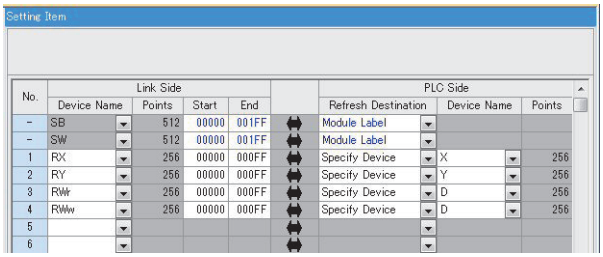

Item	Set value	Setting necessity at GOT connection
Special relay (SB) refresh device	-	△
Special register (SW) refresh device	-	△
Remote input (RX) refresh device	Set as necessary.	△
Remote output (RY) refresh device		△
Remote register (RWr) refresh device		△

○: Necessary △: As necessary ×: Not necessary

• CC-Link configuration setting

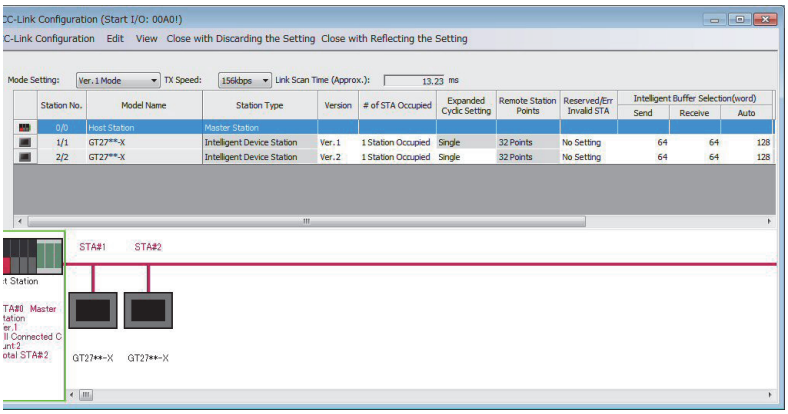

CC-Link configuration setting of station No.1 (GOT)

Item*1	Set value	Setting necessity at GOT connection
Station type	Ver.1 intelligent device station (fixed)	○
Exclusive station count*2	Exclusive station 1	○
Reserve/invalid station select	No setting	○
Intelligent buffer select (word)	(Use default value)	×

○: Necessary △: As necessary ×: Not necessary

CC-Link configuration setting of station No.2 (GOT)

Item*1	Set value	Setting necessity at GOT connection
Station type	Ver.2 intelligent device station (fixed)	○
Expanded cyclic setting*2	Single	○
Exclusive station count*2	Exclusive station 1	○
Reserve/invalid station select	No setting	○
Intelligent buffer select (word)	(Use default value)	×

○: Necessary △: As necessary ×: Not necessary

*1 When the [Mode] of the CC-Link module is set at [Remote net - (Ver. 2 mode)], [Remote station points] can be set.
[Remote station points] is a setting for the remote I/O station.
The default value (32 points) must be used on the GOT.

*2 Set the same setting as that of the GOT.

Point

When changing the module parameter

After writing module parameters to the PLC CPU, turn the PLC CPU OFF then back ON again, or reset the PLC CPU.

[Controller Setting] of GT Designer3

■Communication Settings of station No.1 (GOT)

Item	Set value
Station No.	1: Station No.1
Transmission Rate	0: Online 156kbps
Mode	Ver.1: Remote net (Ver.1 mode)
Expanded Cyclic	Single (Use default value)
Number of stations occupied	1 Station
Input for Error Station	0: Clear
Retry	3times (Use default value)
Timeout Time	3sec (Use default value)
Delay Time	0ms (Use default value)
Transmission method	MELSEC (compatible)

■Communication Settings of station No.2 (GOT)

Item	Set value
Station No.	2: Station No.2
Transmission Rate	0: Online 156kbps
Mode	Ver.2: Remote net (Ver.2 mode)
Expanded Cyclic	Single
Number of stations occupied	1 Station
Input for Error Station	0: Clear
Retry	3times (Use default value)
Timeout Time	3sec (Use default value)
Delay Time	0ms (Use default value)
Transmission method	MELSEC (compatible)

Connection to C Controller / MELSECWinCPU module (MELSEC iQ-R Series)

This section describes the settings of the GOT and C Controller / MELSECWinCPU module (MELSEC iQ-R Series) in the following system configuration.
Use CW Configurator for the C Controller / MELSECWinCPU module (MELSEC iQ-R Series) communication settings.

Point

CC-Link module (MELSEC iQ-R Series)
For details of the CC-Link module (MELSEC iQ-R Series), refer to the following manual.
Manuals of MELSEC iQ-R Series

System configuration

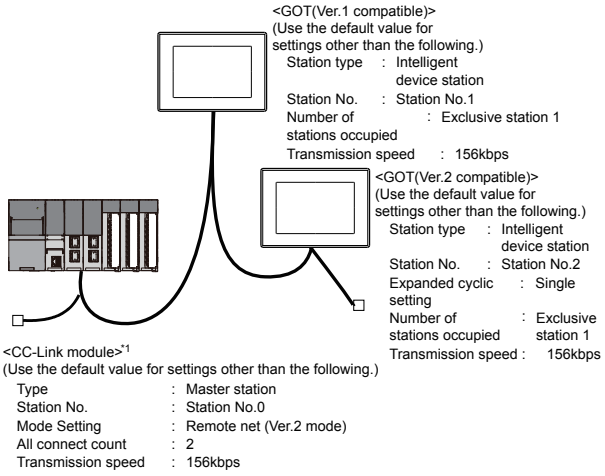

*1 The CC-Link module is mounted on the base unit slot 0.
The Start I/O No. of the CC-Link module is set to "0".

Module parameter setting of CW Configurator

■[Module parameter] of CW Configurator

- Module parameter

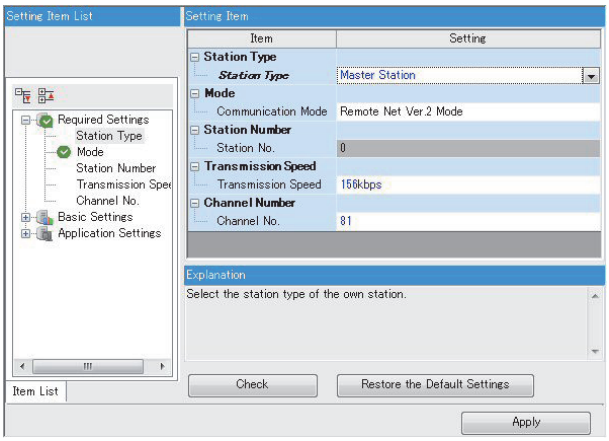

Item	Set value	Setting necessity at GOT connection
Station type	Master station	○
Mode	Remote net (Ver.2 mode)	○
Station No.	0 (fixed)	△
Transmission speed*1	156kbps	○
Channel No.	(Use default value)	×

○: Necessary △: As necessary ×: Not necessary

*1 Adjust the settings with GOT settings.

• Link refresh setting

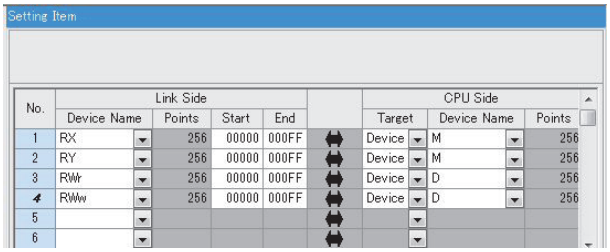

Item	Set value	Setting necessity at GOT connection
Remote input (RX) refresh device	Set as necessary.	△
Remote output (RY) refresh device		△
Remote register (RWr) refresh device		△

○: Necessary △: As necessary ×: Not necessary

• CC-Link configuration setting

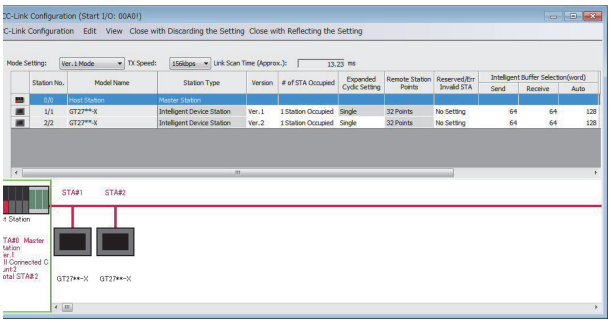

• CC-Link configuration setting of station No.1 (GOT)

Item*1	Set value	Setting necessity at GOT connection
Station type	Ver.1 intelligent device station (fixed)	○
Exclusive station count*2	Exclusive station 1	○
Reserve/invalid station select	No setting	○
Intelligent buffer select (word)	(Use default value)	×

○: Necessary △: As necessary ×: Not necessary

• CC-Link configuration setting of station No.2 (GOT)

Item*1	Set value	Setting necessity at GOT connection
Station type	Ver.2 intelligent device station (fixed)	○
Expanded cyclic setting*2	Single	○
Exclusive station count*2	Exclusive station 1	○
Reserve/invalid station select	No setting	○
Intelligent buffer select (word)	(Use default value)	×

○: Necessary △: As necessary ×: Not necessary

*1 When the [Mode] of the CC-Link module is set at [Remote net - (Ver. 2 mode)], [Remote station points] can be set.
[Remote station points] is a setting for the remote I/O station.
The default value (32 points) must be used on the GOT.

*2 Set the same setting as that of the GOT.

Point

When changing the module parameter

After writing module parameters to the PLC CPU, turn the PLC CPU OFF then back ON again, or reset the PLC CPU.

[Controller Setting] of GT Designer3

■Communication Settings of station No.1 (GOT)

Item	Set value
Station No.	1: Station No.1
Transmission Rate	0: Online 156kbps
Mode	Ver.1: Remote net (Ver.1 mode)
Expanded Cyclic	Single (Use default value)
Number of stations occupied	1 Station
Input for Error Station	0: Clear
Retry	3times (Use default value)
Timeout Time	3sec (Use default value)
Delay Time	0ms (Use default value)
Transmission method	MELSEC (compatible)

■Communication Settings of station No.2 (GOT)

Item	Set value
Station No.	2: Station No.2
Transmission Rate	0: Online 156kbps
Mode	Ver.2: Remote net (Ver.2 mode)
Expanded Cyclic	Single
Number of stations occupied	1 Station
Input for Error Station	0: Clear
Retry	3times (Use default value)
Timeout Time	3sec (Use default value)
Delay Time	0ms (Use default value)
Transmission method	MELSEC (compatible)

Connection to MELSEC-Q Series with Ver.1 compatible

This section describes the settings of the GOT and CC-Link module (MELSEC-Q Series) with Ver.1 compatible in the following system configuration.

Point

CC-Link module (MELSEC-Q Series)

For details on the CC-Link module (MELSEC-Q Series), refer to the following.

CC-Link System Master/Local Module User's Manual QJ61BT11N

System configuration

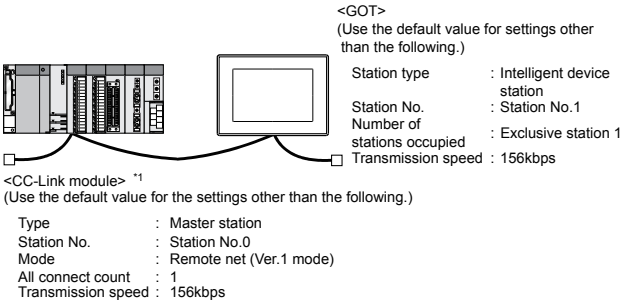

*1 The CC-Link module is mounted on the base unit slot 0.
The Start I/O No. of the CC-Link module is set to "0"

Switch setting of CC-Link module (Q Series)

Set the station number setting switch, transmission speed / mode setting switch.

QJ61BT11, QJ61BT11N

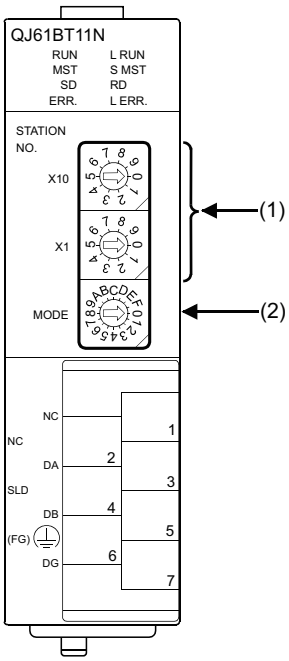

■Station number setting switch

Station number setting switch	Description	Set value	Setting necessity at GOT connection
STATION NO. X10 X1	Station number setting (master station)	0 (fixed)	○

○: Necessary △: As necessary ×: Not necessary

■Transmission rate/mode setting switch

Transmission rate/mode setting switch	Description	Set value	Setting necessity at GOT connection
MODE	Transmission rate/mode setting (Online: 156kbps)*1	0	○

○: Necessary △: As necessary ×: Not necessary

*1 Specify the same transmission speed as that of the GOT.

Point

When the switch setting is changed

Turn the PLC CPU OFF then ON again, or reset the PLC CPU.

Parameter setting (when connecting to MELSEC-Q or QS series)

■[Network parameter] of GX Developer

- Network parameter

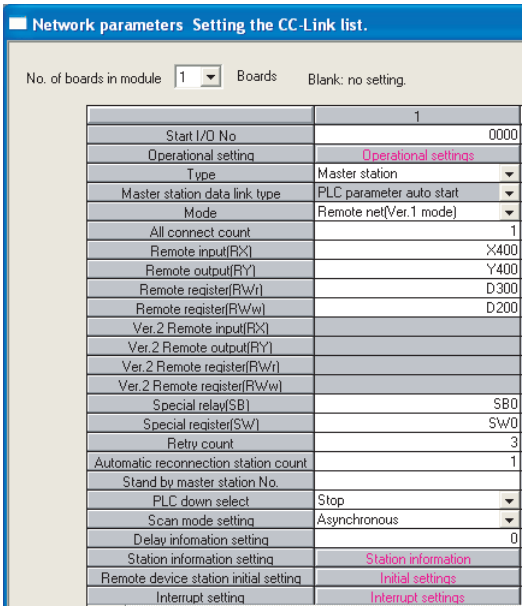

Item	Set value	Setting necessity at GOT connection
No. of boards in module	1	○
Start I/O No.	0000H	○
Operation setting	(Use default value)	△
Type	Master station (fixed)	○
Mode	Remote net (Ver.1 mode)	○
All connect count	1	○
Remote input (RX)	X400	△
Remote output (RY)	Y400	△
Remote register (RWr)	D300	△
Remote register (RWw)	D200	△
Special relay (SB)	SB0	△
Special register (SW)	SW0	△
Retry count	(Use default value)	△
Automatic reconnection station count		△
Stand by master station No.		×
PLC down select		△
Scan mode setting		△
Delay information setting		△
Station information setting	☞ • Station information setting	○
Remote device station initial settings	(Use default value)	×
Interrupt setting		×

○: Necessary △: As necessary ×: Not necessary

• Station information setting

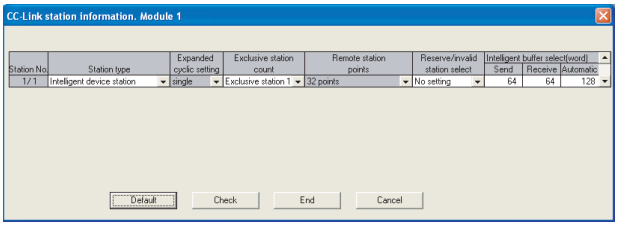

Item*1	Set value	Setting necessity at GOT connection
Station type	Intelligent device station (fixed)	○
Exclusive station count*2	Exclusive station 1	○
Reserve/invalid station select	No setting	○
Intelligent buffer select (word)	(Use default value)	×

○: Necessary △: As necessary ×: Not necessary

*1 When the [Mode] of the CC-Link module is set at [Remote net - (Ver. 1 mode)], [Remote station points] cannot be set.

*2 Set the same number of occupied stations as that on the GOT.

Point

When changing the network parameter

After writing the network parameter to the PLC CPU, operate the PLC CPU ether turning OFF and then ON or resetting.

Parameter setting (when connecting to C Controller module (Q Series))

Use SW3PVC-CCPU-E Ver.3.05F or later for the CC-Link utility.

■Connection settings

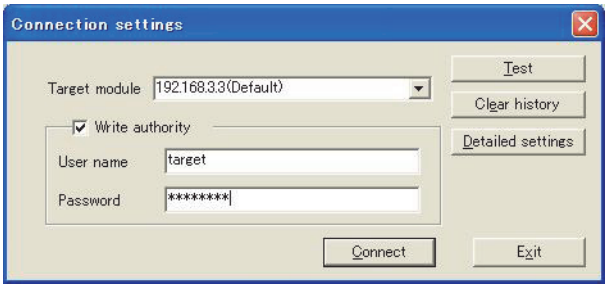

Item	Set value	Setting necessity at GOT connection
Target module*1	192.168.3.3 (Default)	○
Write authority	Mark the checkbox	○
User name*2	target	○
Password*2	password	○
Detailed settings	-	△

○: Necessary △: As necessary ×: Not necessary

*1 If the IP address of the C Controller module (Q Series) has been changed, input the changed IP address or host name.

*2 If the account of the C Controller module (Q Series) has been changed, input the changed user name and password.

■CC-Link Utility's [Parameter Settings]

- Parameter settings

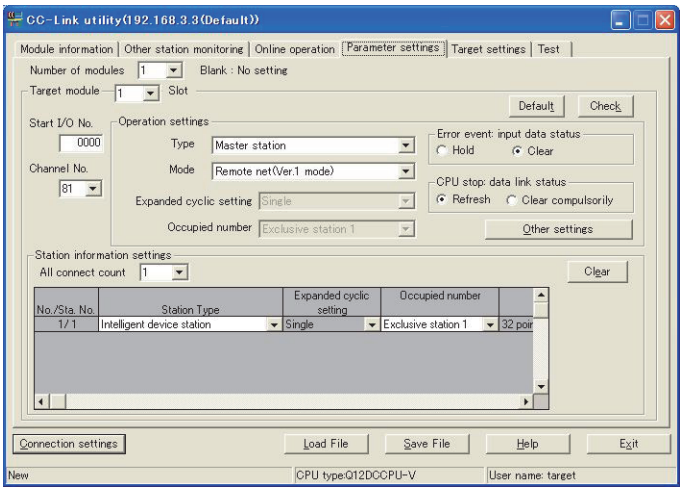

Item*1			Set value	Setting necessity at GOT connection
Number of modules			1	○
Target module			1	○
Start I/O No.			0000H	○
Channel No.			(Use default value)	○
Operation settings	Type		Master station (fixed)	○
	Mode		Remote net (Ver.1 mode)	○
	Expanded cyclic setting		Single	△
	Occupied number		Exclusive station 1	△
	Error event: input data status		Clear	△
	CPU stop: data link status		Refresh	△
	Other settings		(Use default value)	△
Station information settings	All connect count		1	○
	Station Type	Sta.No.1	Intelligent device station	○
	Occupied number*2	Sta.No.1	Exclusive station 1	○
	Reserve/invalid station select	Sta.No.1	No setting	○
	Intelligent buffer select (word)		(Use default value)	×

○: Necessary △: As necessary ×: Not necessary

*1 When the [Mode] of the CC-Link module is set at [Remote net - (Ver. 1 mode)], [Remote station points] cannot be set.

*2 Set the same number of occupied stations as that on the GOT.

Point

When changing the network parameter

After writing the network parameter to the C Controller module (Q Series), either turn the C Controller module (Q Series) OFF and then ON or reset it.

[Controller Setting] of GT Designer3

Item	Set value
Station No.	1: Station No.1
Transmission Rate	0: Online 156kbps
Mode	Ver.1: Remote net (Ver.1 mode)
Expanded Cyclic	Single (Use default value)
Number of stations occupied	1 Station
Input for Error Station	0: Clear
Retry	3times (Use default value)
Timeout Time	3sec (Use default value)
Delay Time	0ms (Use default value)
Transmission method	MELSEC (compatible)

Point

[Controller Setting] of GT Designer3

For the setting method of [Controller Setting] of GT Designer3, refer to the following.

☞ Page 706 Setting communication interface (Controller Setting)

Connection to MELSEC-Q Series with Ver.2 compatible

This section describes the settings of the GOT and CC-Link module (MELSEC-Q Series) with Ver.2 compatible in the following system configuration.

Point

CC-Link module (MELSEC-Q Series)

For details on the CC-Link module (MELSEC-Q Series), refer to the following.

CC-Link System Master/Local Module User's Manual QJ61BT11N

System configuration

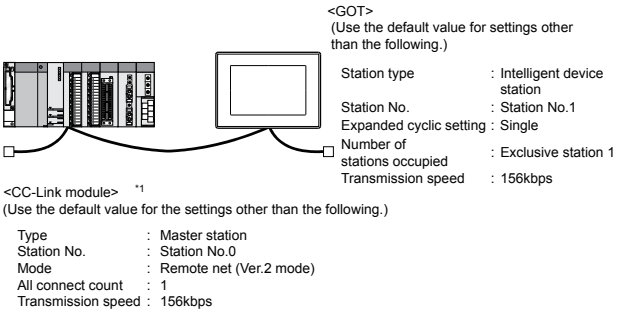

*1 The CC-Link module is mounted on the base unit slot 0.
The Start I/O No. of the CC-Link module is set to "0"

Point

When connecting to Q170MCPU or Q170MSCPU(-S1)

When connected to Q170MCPU or Q170MSCPU(-S1), the start I/O No. of the CC-Link module is set to "70".

Switch setting of CC-Link module (Q Series)

Set the station number setting switch, transmission speed / mode setting switch.

QJ61BT11N

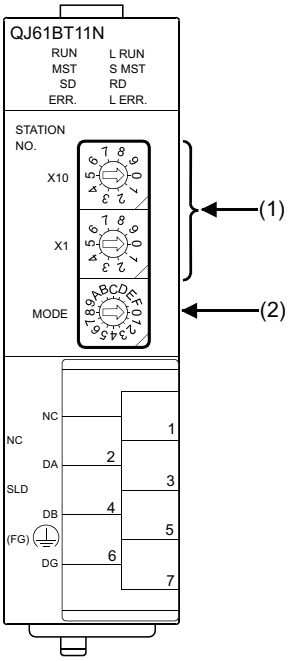

■Station number setting switch

Station number setting switch	Description	Set value	Setting necessity at GOT connection
STATION NO. X10 X1	Station number setting (master station)	0 (fixed)	○

○: Necessary △: As necessary ×: Not necessary

■Transmission rate/mode setting switch

Transmission rate/mode setting switch	Description	Set value	Setting necessity at GOT connection
MODE	Transmission rate/mode setting (Online: 156kbps)*1	0	○

○: Necessary △: As necessary ×: Not necessary

*1 Specify the same transmission speed as that of the GOT.

Point

When the switch setting has been changed

Turn the PLC CPU OFF then ON again, or reset the PLC CPU.

Parameter setting (when connecting to MELSEC-Q or QS series)

■[Network parameter] of GX Developer

- Network parameter

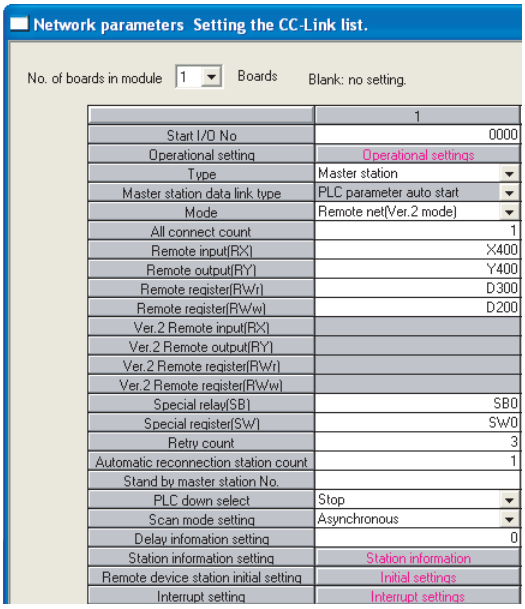

Item	Set value	Setting necessity at GOT connection
No. of boards in module	1	○
Start I/O No.*1	0000H	○
Operation setting	(Use default value)	△
Type	Master station	○
Mode	Remote net (Ver.2 mode)	○
All connect count	1	○
Remote input (RX)	X400	△
Remote output (RY)	Y400	△
Remote register (RWr)	D300	△
Remote register (RWw)	D200	△
Special relay (SB)	SB0	△
Special register (SW)	SW0	△
Retry count	(Use default value)	△
Automatic reconnection station count		△
Stand by master station No.		×
PLC down select		△
Scan mode setting		△
Delay information setting		△
Station information setting	☞ • Station information setting	○
Remote device station initial setting	(Use default value)	×
Interrupt setting		×

○: Necessary △: As necessary ×: Not necessary

*1 When using Q170MCPU, Q170MSCPU(-S1), set it according to the system configuration.

• Station information setting

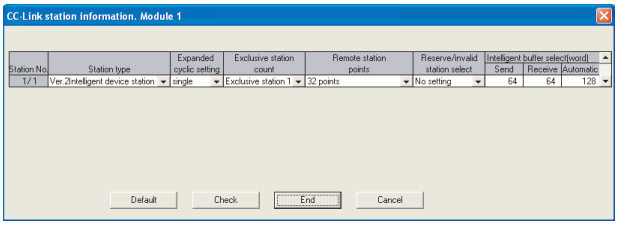

Item*1	Set value	Setting necessity at GOT connection
Station type	Ver.2 intelligent device station (fixed)	○
Expanded cyclic setting*2	Single	○
Exclusive station count*2	Exclusive station 1	○
Remote station points	32 points (fixed)	○
Reserve/invalid station select	No setting	○
Intelligent buffer select (word)	(Use default value)	×

○: Necessary △: As necessary ×: Not necessary

*1 When the [Mode] of the CC-Link module is set at [Remote net - (Ver. 2 mode)], [Remote station points] can be set.
[Remote station points] is a setting for the remote I/O station.
The default value (32 points) must be used on the GOT.

*2 Set the same setting as that of the GOT.

Point

When changing the network parameter

After writing the network parameter to the PLC CPU, operate the PLC CPU ether turning OFF and then ON or resetting.

Parameter setting (when connecting to C Controller module (Q Series))

Use SW3PVC-CCPU-E Ver.3.05F or later for the CC-Link utility.

■Connection settings

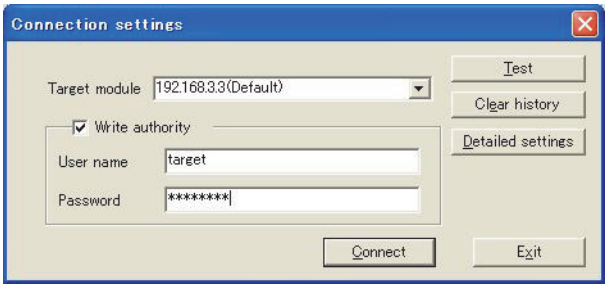

Item	Set value	Setting necessity at GOT connection
Target module*1	192.168.3.3 (Default)	○
Write authority	Mark the checkbox	○
User name*2	target	○
Password*2	password	○
Detailed settings	-	△

○: Necessary △: As necessary ×: Not necessary

*1 If the IP address of the C Controller module (Q Series) has been changed, input the changed IP address or host name.

*2 If the account of the C Controller module (Q Series) has been changed, input the changed user name and password.

■CC-Link Utility's [Parameter Settings]

- Parameter settings

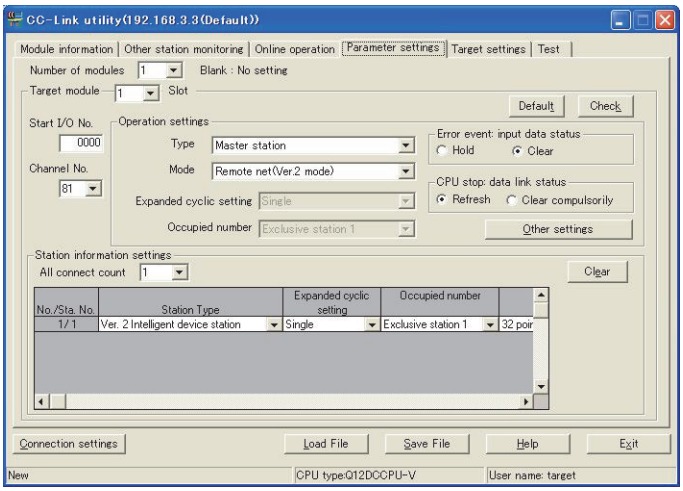

Item*1			Set value	Setting necessity at GOT connection
Number of modules			1	○
Target module			1	○
Start I/O No.			0000H	○
Channel No.			(Use default value)	○
Operation settings	Type		Master station	○
	Mode		Remote net (Ver.2 mode)	○
	Expanded cyclic setting		Single	△
	Occupied number		Exclusive station 1	△
	Error event: input data status		Clear	△
	CPU stop: data link status		Refresh	△
	Other settings		(Use default value)	△
Station information settings	All connect count		1	○
	Station Type	Sta. No.1	Ver.2 intelligent device station	○
	Expanded cyclic setting*2	Sta. No.1	Single	○
	Occupied number*2	Sta. No.1	Exclusive station 1	○
	Remote station points	Sta. No.1	32 points	○
	Reserve/invalid station select	Sta. No.1	No setting	○
	Intelligent buffer select (word)		(Use default value)	×

○: Necessary △: As necessary ×: Not necessary

*1 When the [Mode] of the CC-Link module is set at [Remote net - (Ver. 2 mode)], [Remote station points] can be set.
[Remote station points] is a setting for the remote I/O station.
The default value (32 points) must be used on the GOT.

*2 Set the same setting as that of the GOT.

Point

When changing the network parameter

After writing the network parameter to the C Controller module (Q Series), either turn the C Controller module (Q Series) OFF and then ON or reset it.

[Communication settings] of GT Designer3

Item	Set value
Station No.	1: Station No.1
Transmission Rate	0: Online 156kbps
Mode	Ver.2: Remote net (Ver.2 mode)
Expanded Cyclic	Single
Number of stations occupied	1 Station
Input for Error Station	Clear
Retry	3times (Use default value)
Timeout Time	3sec (Use default value)
Delay Time	0ms (Use default value)
Transmission method	MELSEC (compatible)

Point

[Controller Setting] of GT Designer3

For the setting method of [Controller Setting] of GT Designer3, refer to the following.

☞ Page 706 Setting communication interface (Controller Setting)

Connection to MELSEC-Q Series with Ver.1/Ver.2 compatibles mixed

This section describes the setting of the GOT and CC-Link module (MELSEC-Q Series) with Ver.1/Ver.2 compatibles mixed in the following system configuration.

Point

CC-Link module (MELSEC-Q Series)

For details on the CC-Link module (MELSEC-Q Series), refer to the following.

CC-Link System Master/Local Module User's Manual QJ61BT11N

System configuration

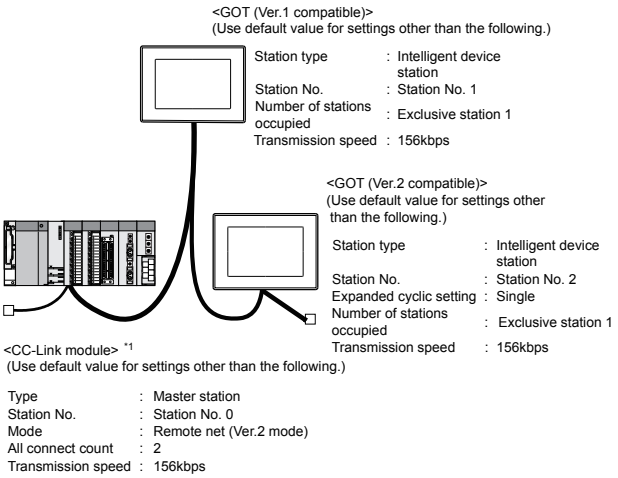

Type	:	Master station
Station No.	:	Station No. 0
Mode	:	Remote net (Ver.2 mode)
All connect count	:	2
Transmission speed	:	156kbps

*1 The CC-Link module is mounted on the base unit slot 0.
The Start I/O No. of the CC-Link module is set to "0"

Point

When connecting to Q170MCPU or Q170MSCPU(-S1)

When connected to Q170MCPU or Q170MSCPU(-S1), the start I/O No. of the CC-Link module is set to "70".

Switch setting of CC-Link module (Q Series)

Set the station number setting switch, transmission speed / mode setting switch.

QJ61BT11N

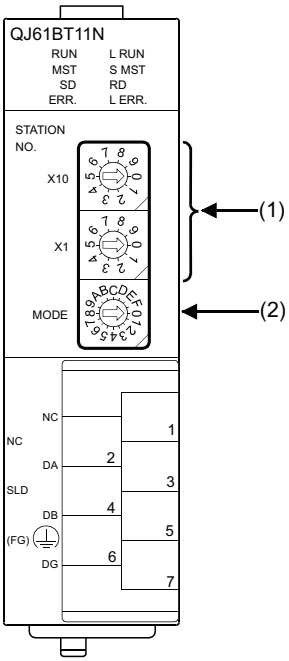

■Station number setting switch

Station number setting switch	Description	Set value	Setting necessity at GOT connection
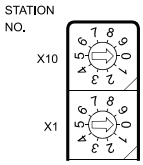	Station number setting (master station)	0 (fixed)	○

○: Necessary △: As necessary ×: Not necessary

■Transmission rate/mode setting switch

Transmission rate/mode setting switch	Description	Set value	Setting necessity at GOT connection
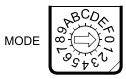	Transmission rate/mode setting (Online: 156kbps)*1	0	○

○: Necessary △: As necessary ×: Not necessary

*1 Specify the same transmission speed as that of the GOT.

Point

When the switch setting has been changed

Turn the PLC CPU OFF then ON again, or reset the PLC CPU.

Parameter setting (when connecting to MELSEC-Q or QS series)

■[Network parameter] of GX Developer

- Network parameter

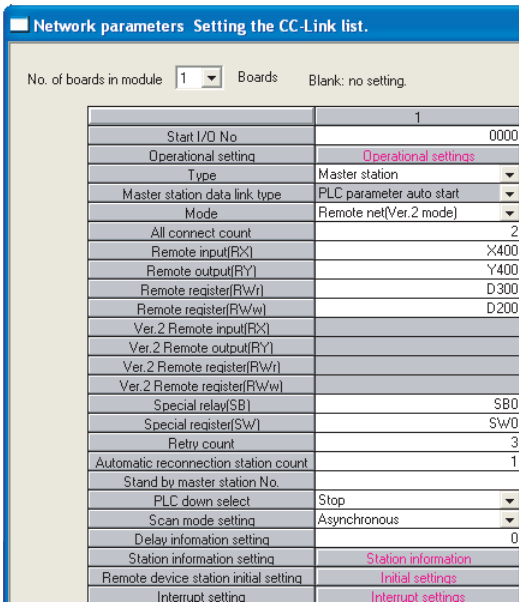

Item	Set value	Setting necessity at GOT connection
No. of boards in module	1	○
Start I/O No.*1	0000H	○
Operation setting	(Use default value)	△
Type	Master station (fixed)	○
Mode	Remote net (Ver.2 mode)	○
All connect count	2	○
Remote input (RX)	X400	△
Remote output (RY)	Y400	△
Remote register (RWr)	D300	△
Remote register (RWw)	D200	△
Special relay (SB)	SB0	△
Special register (SW)	SW0	△
Retry count	(Use default value)	△
Automatic reconnection station count		△
Stand by master station No.		×
PLC down select		△
Scan mode setting		△
Delay information setting		△
Station information setting	☞ • Station information setting	○
Remote device station initial setting	(Use default value)	×
Interrupt setting		×

○: Necessary △: As necessary ×: Not necessary

*1 When using Q170MCPU or Q170MSCPU(-S1), set it according to the system configuration.

• Station information setting

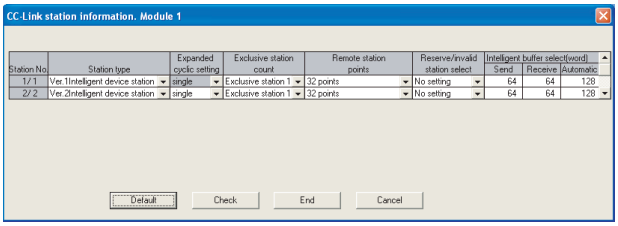

Station information setting of station No.1 (GOT)

Item*1	Set value	Setting necessity at GOT connection
Station type	Ver.1 intelligent device station (fixed)	○
Exclusive station count*2	Exclusive station 1	○
Reserve/invalid station select	No setting	○
Intelligent buffer select (word)	(Use default value)	×

○: Necessary △: As necessary ×: Not necessary

Station information setting of station No.2 (GOT)

Item*1	Set value	Setting necessity at GOT connection
Station type	Ver.2 intelligent device station (fixed)	○
Expanded cyclic setting*2	Single	○
Exclusive station count*2	Exclusive station 1	○
Reserve/invalid station select	No setting	○
Intelligent buffer select (word)	(Use default value)	×

○: Necessary △: As necessary ×: Not necessary

*1 When the [Mode] of the CC-Link module is set at [Remote net - (Ver. 2 mode)], [Remote station points] can be set.
[Remote station points] is a setting for the remote I/O station.
The default value (32 points) must be used on the GOT.

*2 Set the same setting as that of the GOT.

Point

When changing the network parameter

After writing the network parameter to the PLC CPU, operate the PLC CPU ether turning OFF and then ON or resetting.

Parameter setting (when connecting to C Controller module)

Use SW3PVC-CCPU-E Ver.3.05F or later for the CC-Link utility.

■Connection settings

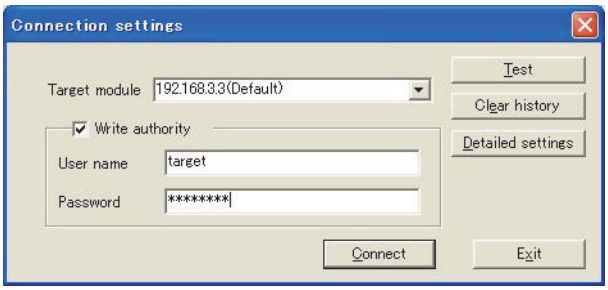

Item	Set value	Setting necessity at GOT connection
Target module*1	192.168.3.3 (Default)	○
Write authority	Mark the checkbox	○
User name*2	target	○
Password*2	password	○
Detailed settings	-	△

○: Necessary △: As necessary ×: Not necessary

*1 If the IP address of the C Controller module (Q Series) has been changed, input the changed IP address or host name.

*2 If the account of the C Controller module (Q Series) has been changed, input the changed user name and password.

■CC-Link Utility's [Parameter Settings]

- Parameter settings

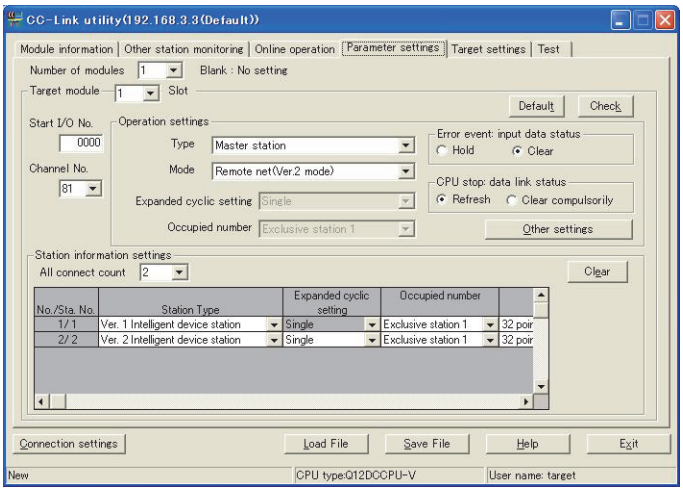

Item*1			Set value	Setting necessity at GOT connection
Number of modules			1	○
Target module			1	○
Start I/O No.			0000H	○
Channel No.			(Use default value)	○
Operation settings	Type		Master station	○
	Mode		Remote net (Ver.2 mode)	○
	Expanded cyclic setting		Single	△
	Occupied number		Exclusive station 1	△
	Error event: input data status		Clear	△
	CPU stop: data link status		Refresh	△
	Other settings		(Use default value)	△
Station information settings	All connect count		2	○
	Station Type	Sta. No.1	Ver.1 intelligent device station	○
		Sta. No.2	Ver.2 intelligent device station	○
	Expanded cyclic setting*2	Sta. No.1	Single	△
		Sta. No.2	Single	○
	Occupied number*2	Sta. No.1	Exclusive station 1	○
		Sta. No.2	Exclusive station 1	○
	Remote station points	Sta. No.1	32 points	○
		Sta. No.2	32 points	○
	Reserve/invalid station select	Sta. No.1	No setting	○
		Sta. No.2	No setting	○
	Intelligent buffer select (word)		(Use default value)	×

○: Necessary △: As necessary ×: Not necessary

*1 When the [Mode] of the CC-Link module is set at [Remote net - (Ver. 2 mode)], [Remote station points] can be set.
[Remote station points] is a setting for the remote I/O station.
The default value (32 points) must be used on the GOT.

*2 Set the same setting as that of the GOT.

Point

When changing the network parameter

After writing the network parameter to the C Controller module (Q Series), either turn the C Controller module (Q Series) OFF and then ON or reset it

[Controller Setting] of GT Designer3

■Communication Settings of station No.1 (GOT)

Item	Set value
Station No.	1: Station No.1
Transmission Rate	0: Online 156kbps
Mode	Ver.1: Remote net (Ver.1 mode)
Expanded Cyclic	Single (Use default value)
Number of stations occupied	1 Station
Input for Error Station	0: Clear
Retry	3times (Use default value)
Timeout Time	3sec (Use default value)
Delay Time	0ms (Use default value)
Transmission method	MELSEC (compatible)

■Communication Settings of station No.2 (GOT)

Item	Set value (Use default value)
Station No.	2: Station No.2
Transmission Rate	0: Online 156kbps
Mode	Ver.2: Remote net (Ver.2 mode)
Expanded Cyclic	Single
Number of stations occupied	1 Station
Input for Error Station	0: Clear
Retry	3times (Use default value)
Timeout Time	3sec (Use default value)
Delay Time	0ms (Use default value)
Transmission method	MELSEC (compatible)

Connection to MELSEC-L series with CC-Link Ver.1 compatible

This section describes the settings of the GOT and MELSEC-L Series with Ver.1 compatible in the following system configuration.

Point

- CC-Link module (MELSEC-L Series)

For details on the CC-Link module (MELSEC-L Series), refer to the following.

MELSEC-L CC-Link System Master/Local Module User's Manual

- CC-Link function built-in CPU

For details on the CC-Link function built-in CPU, refer to the following manual.

MELSEC-L CC-Link System Master/Local Module User's Manual

System configuration

(Example when using CC-Link module (MELSEC-L Series))

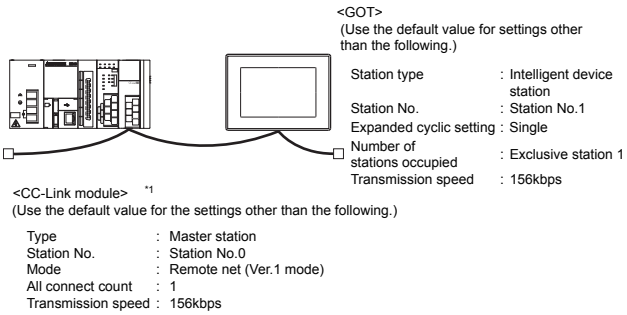

[Network parameter] of GX Developer

■Network parameter

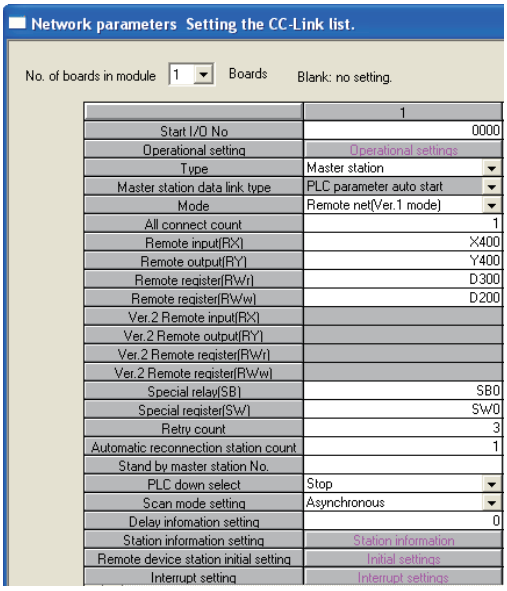

Item	Set value	Setting necessity at GOT connection
No. of boards in module	1	○
Start I/O No.*1	0000H	○
Operation setting	(Use default value)	△
Type	Master station (fixed)	○
Mode	Remote net (Ver.1 mode)	○
All connect count	1	○
Remote input (RX)	X400	△
Remote output (RY)	Y400	△
Remote register (RWr)	D300	△
Remote register (RWw)	D200	△
Special relay (SB)	SB0	△
Special register (SW)	SW0	△
Retry count	(Use default value)	△
Automatic reconnection station count		△
Stand by master station No.		×
PLC down select		△
Scan mode setting		△
Delay information setting		△
Station information setting	☞ Page 747 Station information setting	○
Remote device station initial setting	(Use default value)	×
Interrupt setting		×

○: Necessary △: As necessary ×: Not necessary

*1 Set the Start I/O No. of the CC-Link module according to the system configuration.

■Station information setting

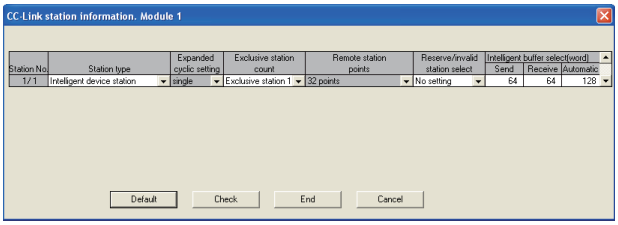

Item*1	Set value	Setting necessity at GOT connection
Station type	Intelligent device station (fixed)	○
Exclusive station count*2	Exclusive station 1	○
Reserve/invalid station select	No setting	○
Intelligent buffer select (word)	(Use default value)	×

○: Necessary △: As necessary ×: Not necessary

*1 When the [Mode] of the CC-Link module is set at [Remote net - (Ver. 1 mode)], [Remote station points] cannot be set.

*2 Set the same setting as that of the GOT.

Point

When changing the network parameter

After writing the network parameter to the PLC CPU, operate the PLC CPU ether turning OFF and then ON or resetting.

[Controller Setting] of GT Designer3

Item	Set value
Station No.	1: Station No.1
Transmission Rate	0: Online 156kbps
Mode	Ver.1: Remote net (Ver.1 mode)
Expanded Cyclic	Single (Use default value)
Number of stations occupied	1 Station
Input for Error Station	0: Clear
Retry	3times (Use default value)
Timeout Time	3sec (Use default value)
Delay Time	0ms (Use default value)
Transmission method	MELSEC (compatible)

Point

[Controller Setting] of GT Designer3

For the setting method of [Controller Setting] of GT Designer3, refer to the following.

☞ Page 706 Setting communication interface (Controller Setting)

Connection to MELSEC-L series with CC-Link Ver.2 compatible

This section describes the settings of the GOT and MELSEC-L Series with Ver.2 compatible in the following system configuration.

Point

- CC-Link module (MELSEC-L Series)

For details on the CC-Link module (MELSEC-L Series), refer to the following.

MELSEC-L CC-Link System Master/Local Module User's Manual

- CC-Link function built-in CPU

For details on the CC-Link function built-in CPU, refer to the following manual.

MELSEC-L CC-Link System Master/Local Module User's Manual

System configuration

(Example when using CC-Link module (MELSEC-L Series))

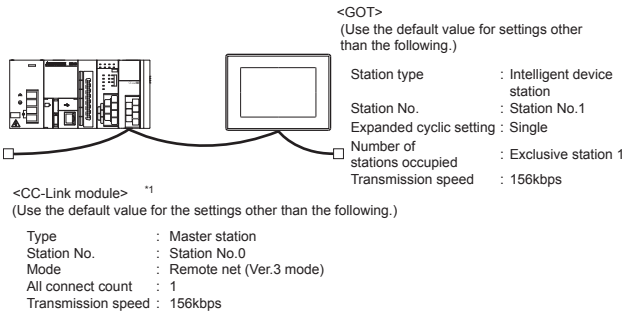

[Network parameter] of GX Developer

■Network parameter

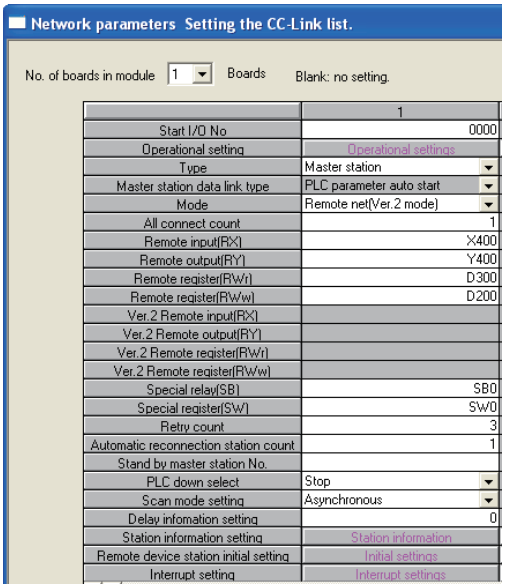

Item	Set value	Setting necessity at GOT connection
No. of boards in module	1	○
Start I/O No.*1	0000H	○
Operation setting	(Use default value)	△
Type	Master station (fixed)	○
Mode	Remote net (Ver.2 mode)	○
All connect count	1	○
Remote input (RX)	X400	△
Remote output (RY)	Y400	△
Remote register (RWr)	D300	△
Remote register (RWw)	D200	△
Special relay (SB)	SB0	△
Special register (SW)	SW0	△
Retry count	(Use default value)	△
Automatic reconnection station count		△
Stand by master station No.		×
PLC down select		△
Scan mode setting		△
Delay information setting		△
Station information setting	☞ Page 750 Station information setting	○
Remote device station initial setting	(Use default value)	×
Interrupt setting		×

○: Necessary △: As necessary ×: Not necessary

*1 Set the Start I/O No. of the CC-Link module according to the system configuration.

■Station information setting

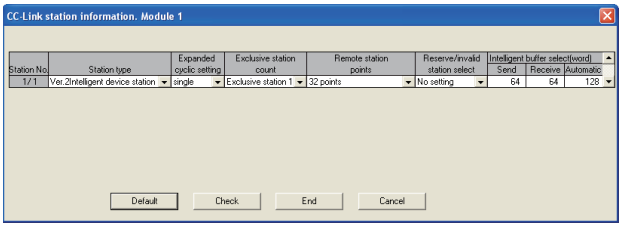

Item[*1]	Set value	Setting necessity at GOT connection
Station type	Ver.2 intelligent device station (fixed)	○
Expanded cyclic setting[*2]	Single	○
Exclusive station count[*2]	Exclusive station 1	○
Remote station points	32 points (fixed)	○
Reserve/invalid station select	No setting	○
Intelligent buffer select (word)	(Use default value)	×

○: Necessary △: As necessary ×: Not necessary

*1 When the [Mode] of the CC-Link module is set at [Remote net - (Ver. 2 mode)], [Remote station points] can be set.
[Remote station points] is a setting for the remote I/O station.
The default value (32 points) must be used on the GOT.

*2 Set the same setting as that of the GOT.

Point

When changing the network parameter
After writing the network parameter to the PLC CPU, operate the PLC CPU either turning OFF and then ON or resetting.

[Controller Setting] of GT Designer3

Item	Set value
Station No.	1: Station No.1
Transmission Rate	0: Online 156kbps
Mode	Ver.2: Remote net (Ver.2 mode)
Expanded Cyclic	Single
Number of stations occupied	1 Station
Input for Error Station	0: Clear
Retry	3times (Use default value)
Timeout Time	3sec (Use default value)
Delay Time	0ms (Use default value)
Transmission method	MELSEC (compatible)

Point

[Controller Setting] of GT Designer3
For the setting method of [Controller Setting] of GT Designer3, refer to the following.
☞ Page 706 Setting communication interface (Controller Setting)

Connection to MELSEC-QnA series

This section describes the settings of the GOT and the CC-Link module (MELSEC-QnA Series) with Ver.2 compatible in the following system configuration.

Point

CC-Link module (MELSEC-QnA Series)

For details on the CC-Link module (MELSEC-QnA Series), refer to the following.

Control & Communication Link System Master/Local Module Type AJ61QBT11/A1SJ61QBT11 User's Manual

System configuration

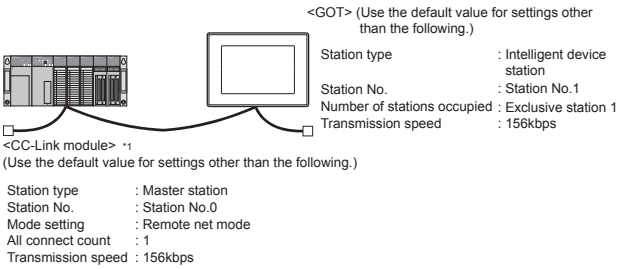

*1 The CC-Link module is mounted on the base unit slot 0.
The Start I/O No. of the CC-Link module is set to "0"

Switch settings of CC-Link module (QnA Series)

Set for each setting switch.

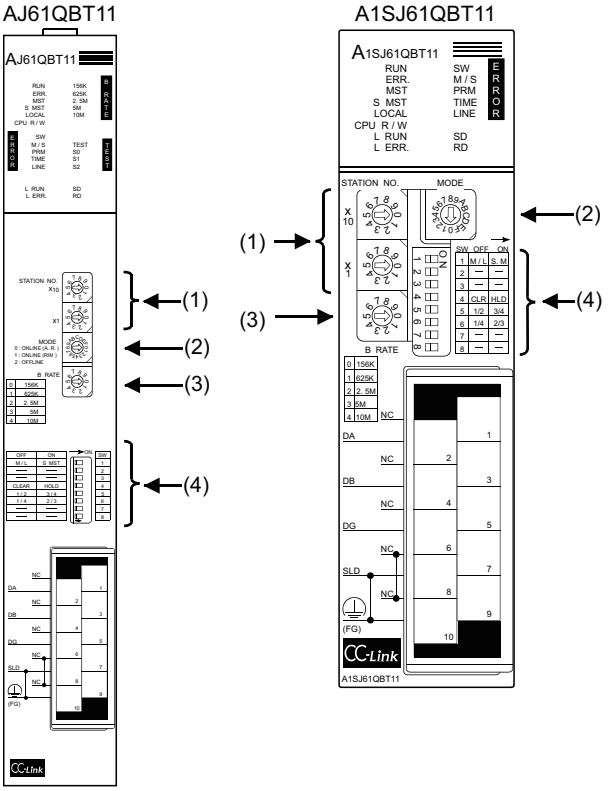

■Station number setting switch

Station number setting switch	Description	Set value	Setting necessity at GOT connection
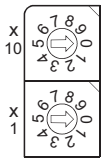	Station number setting (master station)	0 (fixed)	○

○: Necessary △: As necessary ×: Not necessary

■Mode setting switch

Mode setting switch	Description	Set value	Setting necessity at GOT connection
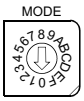	Mode setting (Online: Remote net mode)	0 (fixed)	○

○: Necessary △: As necessary ×: Not necessary

■Transmission speed setting switch

Transmission speed setting switch	Description	Set value	Setting necessity at GOT connection
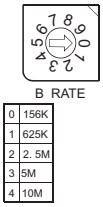	Transmission speed setting (156kbps)*1	0	○

○: Necessary △: As necessary ×: Not necessary

*1 Specify the same transmission speed as that of the GOT.

■Condition setting switches

Condition setting switches	Setting switch	Description	Set value	Setting necessity at GOT connection
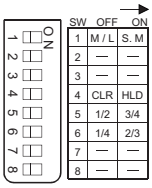	SW1	Station type (Master station/Local station)	OFF (fixed)	○
	SW2	Not used	OFF (fixed)	×
	SW3			
	SW4	Input data status of the data link error station (clear)	OFF	△
	SW5	Number of stations occupied*1	OFF (fixed)	×
	SW6			
	SW7	Not used	OFF (fixed)	×
	SW8			

○: Necessary △: As necessary ×: Not necessary

*1 Will be valid when the CC-Link module is the local station.
In the case of the master station, turn off it.

Point

When the switch setting has been changed
Turn the PLC CPU OFF then ON again, or reset the PLC CPU.

Parameter setting

There are two methods for the parameter setting: perform the setting from [Network parameter] of GX Developer and the sequence program.

Performing it from the [Network parameter] of the GX Developer can be set only when the PLC CPU and the CC-Link module use the function version B or later.

■Setting from [Network parameter] of GX Developer

- Network parameter

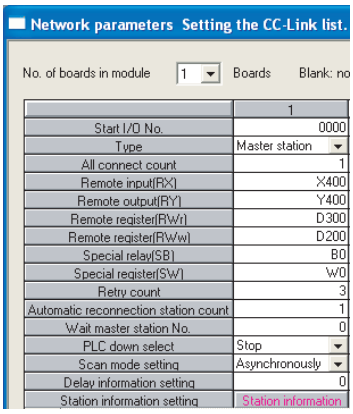

Item	Set value	Setting necessity at GOT connection
No. of boards in module	1	○
Start I/O No.	0000H	○
Type	Master station (fixed)	○
All connect count	1	○
Remote input (RX)	X400	△
Remote output (RY)	Y400	△
Remote register (RWr)	D300	△
Remote register (RWw)	D200	△
Special relay (SB)	B0	△
Special register (SW)	W0	△
Retry count	(Use default value)	△
Automatic reconnection station count		△
Wait master station No.		×
PLC down select		△
Scan mode setting		△
Delay information setting		△
Station information setting	☞ • Station information setting	○

○: Necessary △: As necessary ×: Not necessary

• Station information setting

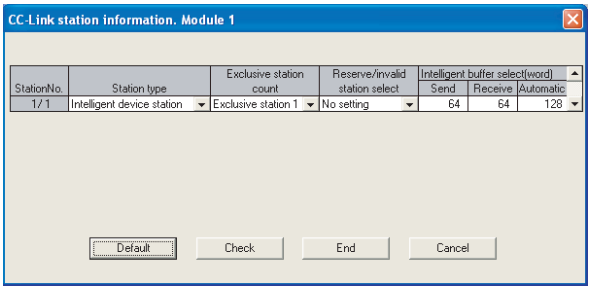

Item	Set value	Setting necessity at GOT connection
Station type	Intelligent device station (fixed)	○
Exclusive station count*1	Exclusive station 1	○
Reserve/invalid station select	No setting	○
Intelligent buffer select (word)	(Use default value)	×

○: Necessary △: As necessary ×: Not necessary

*1 Specify the same number of occupied stations as that of the GOT.

Point

When changing the network parameter

After writing the network parameter to the PLC CPU, operate the PLC CPU ether turning OFF and then ON or resetting.

■Setting from sequence program

The parameter is written to the buffer memory, and the data link is automatically started when PLC CPU status changes from STOP to RUN.

• I/O signal of CC-Link module

📖Control & Communication Link System Master/Local Module Type AJ61QBT11/A1SJ61QBT11 User's Manual

• Device used by user

Device	Application
M100, M101	Flag for parameter setting
M102, M103	Flag for data link startup
D0	Number of connected modules
D1	Number of retry
D2	Automatic reconnection station count
D3	Operation specification in the case of CPU failure
D4	Reserved station specification (Station No. 1 to Station No. 16)
D5	Error invalid station specification (Station No. 1 to Station No. 16)
D6	Station data (first module)
D400	Error code in the case of data link startup failure

• Buffer memory settings used in the present example

Buffer memory address Decimal (Hex)	Item	Set value
1(11 (1H)	Number of connected modules	1 (1 module)
2(22 (2H)	Number of retry	3 (3times)
3(33 (3H)	Automatic reconnection station count	1 (1 station)
6(66 (6H)	Operation specification in the case of CPU failure	0 (stop)
16(1016 (10H)	Reserved station specification (Station No. 1 to Station No. 16)	0 (No specification)
20(1420 (14H)	Error invalid station specification (Station No. 1 to Station No. 16)	0 (No specification)
32(2032 (20H)	Station data (first module)*1	2101H

*1 Details for the station data are shown below.
For 1) and 2), set the same station No. and number of station occupied as those of the GOT.
For 3), the setting is fixed.

b15 to b12	b11 to b8	b7 to b0
3)	2)	1)

1) Station No. (Set the same station No. as that of the GOT)
01H to 40H: Station No. 1 to Station No. 64

2) Number of stations occupied (Set the number of station occupied as that of the GOT)
1H: Exclusive station 1
2H: Exclusive station 2
3H: Exclusive station 3
4H: Exclusive station 4

3) Station type (2H: Set it to intelligent device station)
0H: Remote I/O station
1H: Remote device station
2H: Intelligent device station (Incl. local station)

- Example of sequence program

Parameter setting

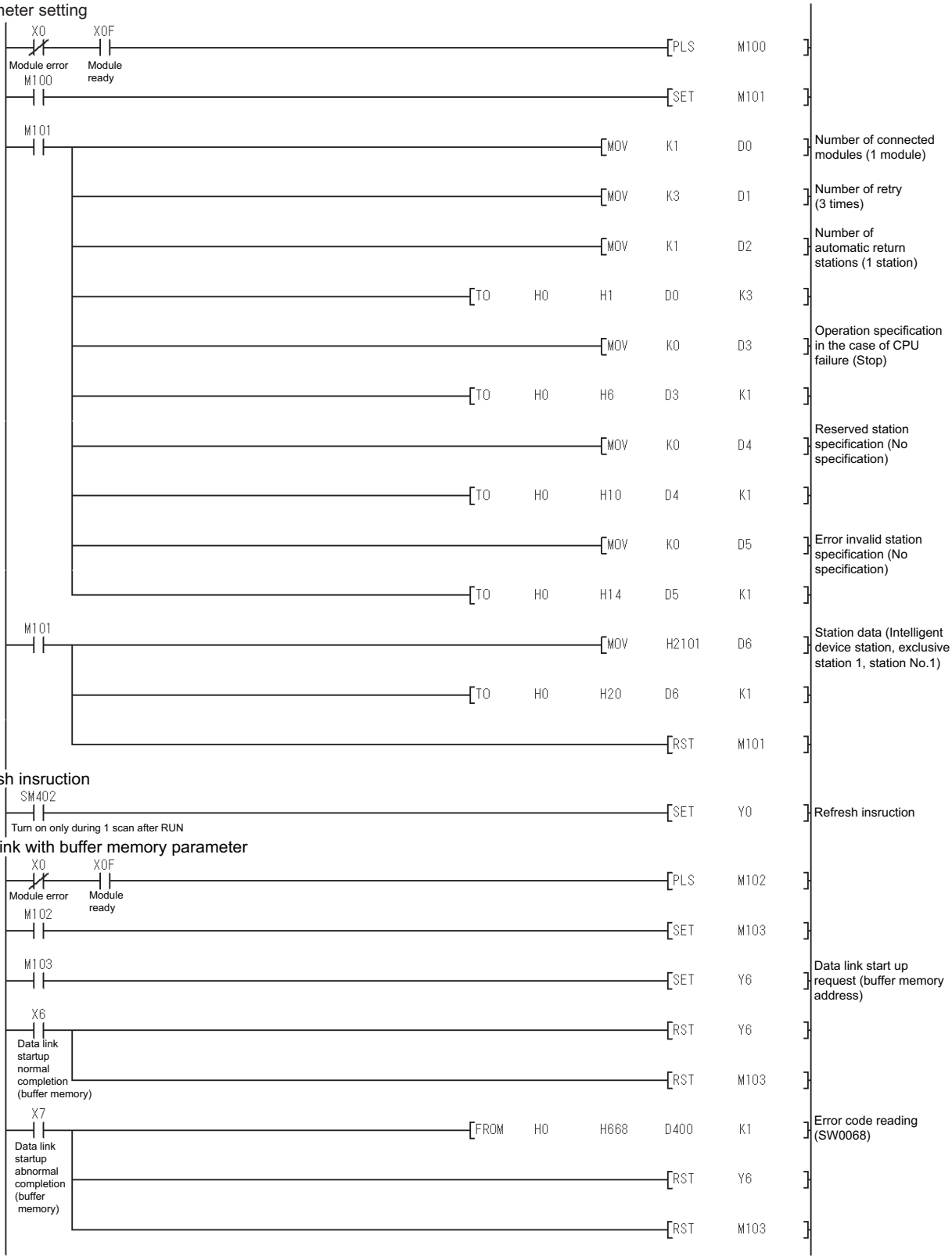

Refresh insruction

Data link with buffer memory parameter

Point

When changing the sequence program

After writing the sequence program to the PLC CPU, operate the PLC CPU ether turning OFF and then ON or resetting.

[Controller Setting] of GT Designer3

Item	Set value
Station No.	1: Station No.1
Transmission Rate	0: Online 156kbps
Mode	Ver.1: Remote net (Ver.1 mode)
Expanded Cyclic	Single (Use default value)
Number of stations occupied	1 Station
Input for Error Station	0: Clear
Retry	3times (Use default value)
Timeout Time	3sec (Use default value)
Delay Time	0ms (Use default value)
Transmission method	MELSEC (compatible)

Point

[Controller Setting] of GT Designer3

For the setting method of [Controller Setting] of GT Designer3, refer to the following.

☞ Page 706 Setting communication interface (Controller Setting)

Connection to MELSEC-A series

This section describes the settings of the GOT and CC-Link module (MELSEC-A Series) in the following system configuration.

Point

CC-Link module (MELSEC-A Series)

For details on the CC-Link module (MELSEC-A Series), refer to the following.

Control & Communication Link System Master/Local Module Type AJ61BT11/A1SJ61BT11 User's Manual

System configuration

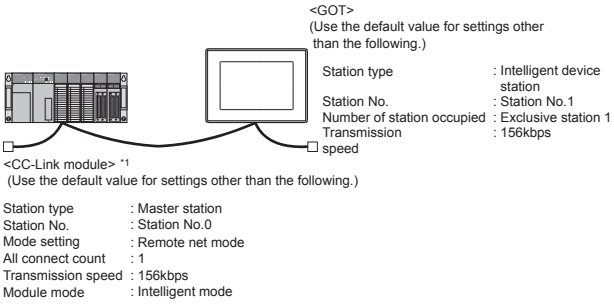

*1 The CC-Link module is mounted on the base unit slot 0.
The Start I/O No. of the CC-Link module is set to "0"

Settings of CC-Link module (A Series)

Set for each setting switch.

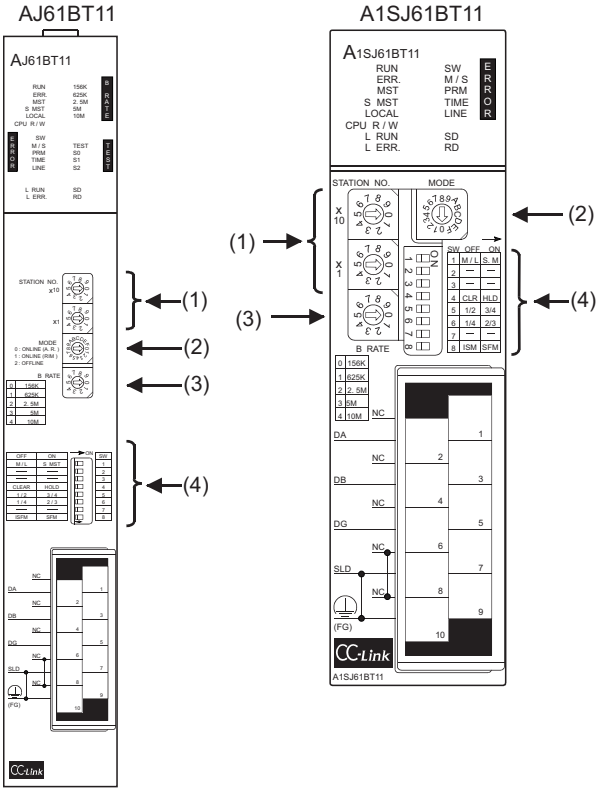

■Station number setting switch

Station number setting switch	Description	Set value	Setting necessity at GOT connection
STATION NO. 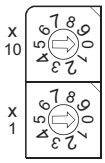	Station number setting (master station)	0 (fixed)	○

○: Necessary △: As necessary ×: Not necessary

■Mode setting switch

Mode setting switch	Description	Set value	Setting necessity at GOT connection
MODE 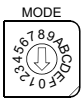	Mode setting (Online: Remote net mode)	0 (fixed)	○

○: Necessary △: As necessary ×: Not necessary

■Transmission speed setting switch

Transmission speed setting switch	Description	Set value	Setting necessity at GOT connection
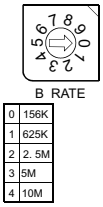	Transmission speed setting (156kbps)*1	0	○

○: Necessary △: As necessary ×: Not necessary

*1 Specify the same transmission speed as that of the GOT.

■Condition setting switches

Condition setting switches	Setting switch	Description	Set value	Setting necessity at GOT connection
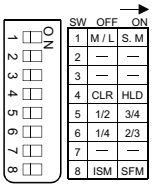	SW1	Station type (Master station/Local station)	OFF (fixed)	○
	SW2	Not used	OFF (fixed)	×
	SW3			
	SW4	Input data status of the data link error station (clear)	OFF	△
	SW5	Number of stations occupied*1	OFF (fixed)	×
	SW6			
	SW7	Not used	OFF (fixed)	×
	SW8	Module mode (Intelligent mode)	OFF (fixed)	○

○: Necessary △: As necessary ×: Not necessary

*1 Will be valid when the CC-Link module is a local station.
In the case of the master station, turn off it.

Point

When the switch setting has been changed
Turn the PLC CPU OFF then ON again, or reset the PLC CPU.

Sequence program

The parameter setting and the sequence program of the data link startup request is required.

■Programming condition (with CC-Link dedicated instructions)

The program sets the network parameter and automatic refresh parameter when PLC CPU status changes from STOP to RUN, and automatically starts the data link with CC-Link dedicated instructions.

- I/O signal of CC-Link module

📖Control & Communication Link System Master/Local Module Type AJ61BT11/A1SJ61BT11 User's Manual

- Device used by user

Device	Application
M0	RLPA instruction normal completion flag
M1	RLPA instruction error completion flag
M100	Network parameter setting flag
M101	Automatic refresh parameter setting flag
D0	Synchronous mode valid/invalid
D1	Number of connected modules
D2	Station data
D3	Send buffer size
D4	Receive buffer size
D5	Automatic update buffer size
D400	Error code in the case of error completion of RLPA instruction
D100 to D103	Automatic refresh setting (RX)
D104 to D107	Automatic refresh setting (RY)
D108 to D111	Automatic refresh setting (RW)
D112 to D115	Automatic refresh setting (SB)
D116 to D119	Automatic refresh setting (SW)

• Example of sequence program (CC-Link dedicated instruction)

* Setting of network parameter with dedicated RLPA instruction

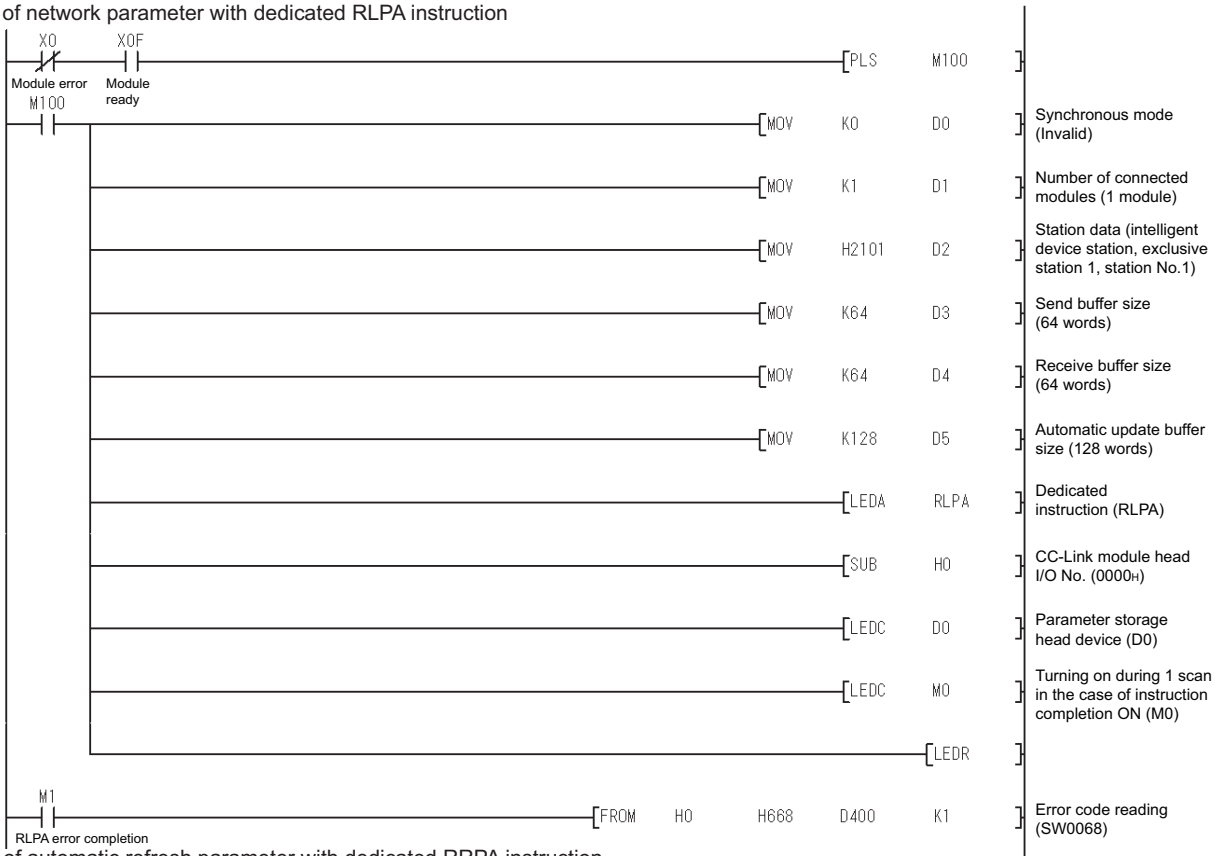

* Setting of automatic refresh parameter with dedicated RRPA instruction

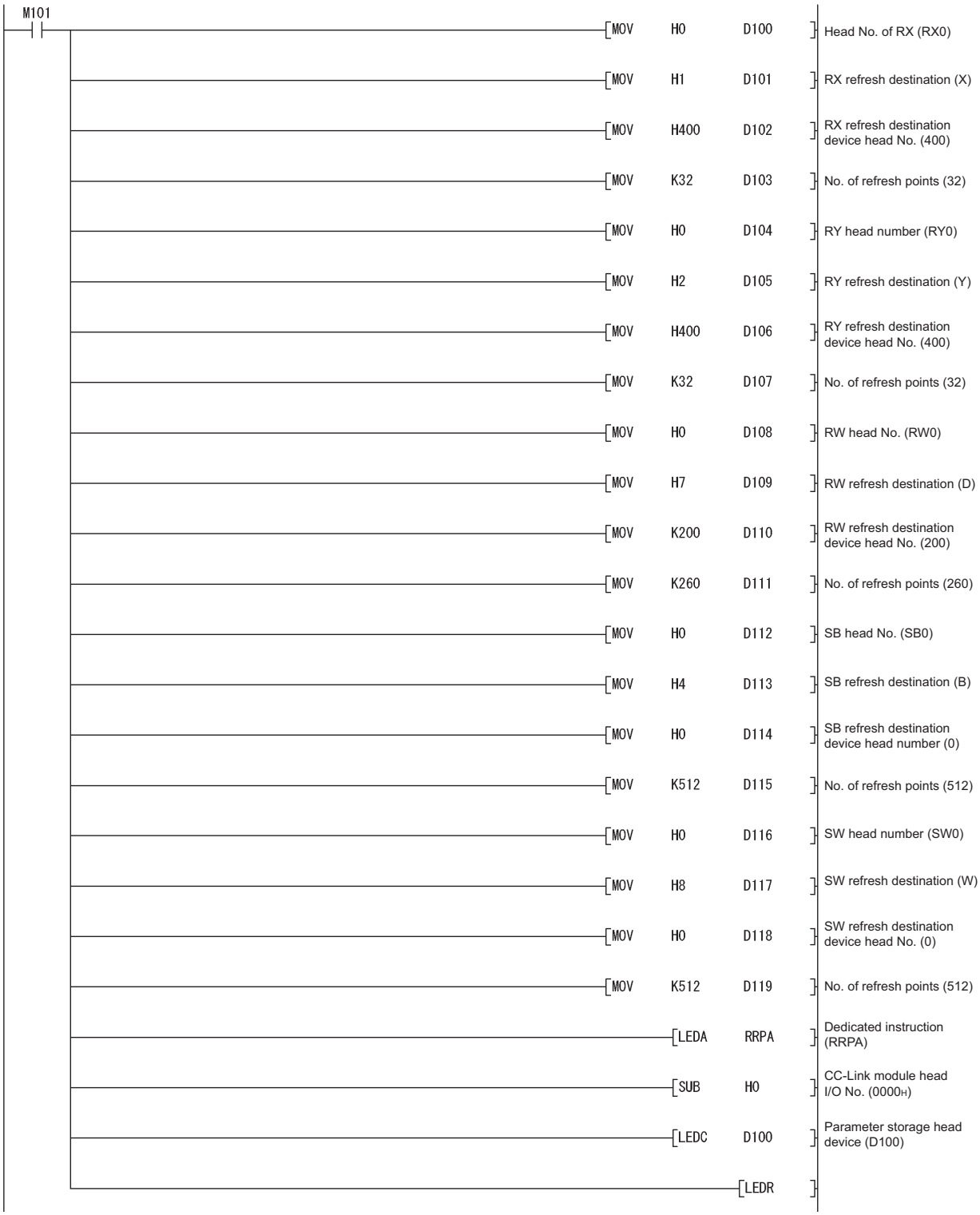

Point

When changing the sequence program

After writing the sequence program to the PLC CPU, operate the PLC CPU ether turning OFF and then ON or resetting.

■Program condition (for FROM/TO instruction)

This program writes parameters to the buffer memory when PLC CPU status changes from STOP to RUN and automatically starts the data link with FROM/TO instruction.

- I/O signal of CC-Link module

📖Control & Communication Link System Master/Local Module Type AJ61BT11/A1SJ61BT11 User's Manual

- Devices used by user

Device	Application
M100, M101	Flag for parameter setting
M102, M103	Flag for data link startup
D0	Number of connected modules
D1	Number of retry
D2	Automatic reconnection station count
D3	Operation specification in the case of CPU failure
D4	Reserved station specification (Station No. 1 to Station No. 16)
D5	Error invalid station specification (Station No. 1 to Station No. 16)
D6	Station data (first module)
D400	Error code in the case of data link startup failure

- Buffer memory settings used in the present example

Buffer memory address Decimal (Hex)	Item	Set value
1 (1H)	Number of connected modules	1 (1 module)
2 (2H)	Number of retry	3 (3times)
3 (3H)	Automatic reconnection station count	1 (1 station)
6 (6H)	Operation specification in the case of CPU failure	0 (stop)
16 (10H)	Reserved station specification (Station No. 1 to Station No. 16)	0 (No specification)
20 (14H)	Error invalid station specification (Station No. 1 to Station No. 16)	0 (No specification)
32 (20H)	Station data (first module)*1	2101H

*1 Details for the station data are shown below.
For 1) and 2), set the same station No. and number of station occupied settings as those of the GOT.
For 3), the setting is fixed.

b15 to b12	b11 to b8	b7 to b0
3)	2)	1)

1) Station No. (Set the same station No. as that of the GOT.)
01H to 40H: Station No. 1 to Station No. 64

2) Number of stations occupied (Set the same setting of the number of station occupied as that of the GOT.)
1H: Exclusive station 1
2H: Exclusive station 2
3H: Exclusive station 3
4H: Exclusive station 4

3) Station type (2H: Set it to intelligent device station.)
0H: Remote I/O station
1H: Remote device station
2H: Intelligent device station (Incl. local station)

• Example of sequence program (FROM/TO instruction)

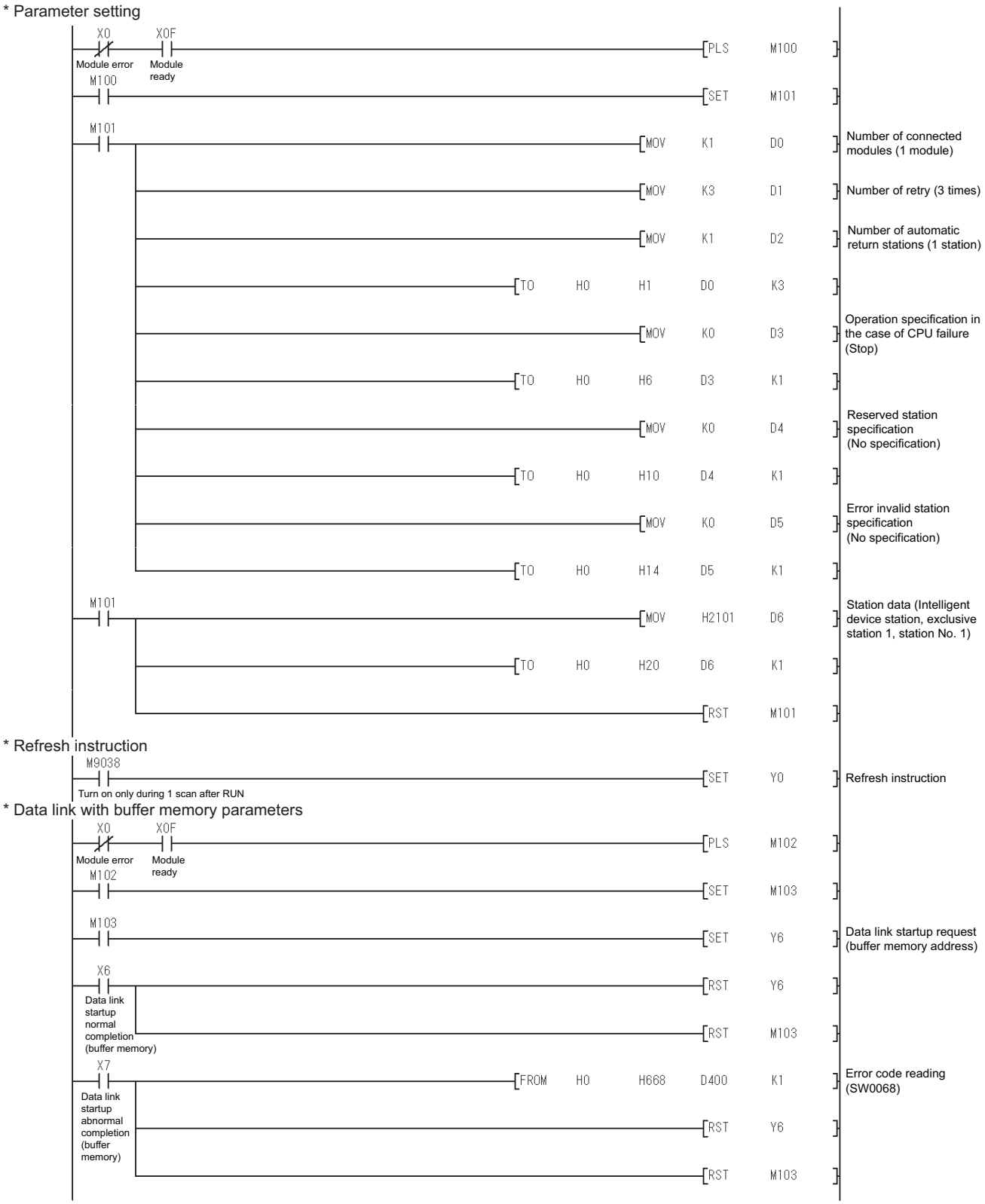

Point

When changing the sequence program

After writing the sequence program to the PLC CPU, operate the PLC CPU ether turning OFF and then ON or resetting.

[Controller Setting] of GT Designer3

Item	Set value
Station No.	1: Station No.1
Transmission Rate	0: Online 156kbps
Mode	Ver.1: Remote net (Ver.1 mode)
Expanded Cyclic	Single (Use default value)
Number of stations occupied	1 Station
Input for Error Station	0: Clear
Retry	3times (Use default value)
Timeout Time	3sec (Use default value)
Delay Time	0ms (Use default value)
Transmission method	MELSEC (compatible)

Point

[Controller Setting] of GT Designer3

For the setting method of [Controller Setting] of GT Designer3, refer to the following.

☞ Page 706 Setting communication interface (Controller Setting)

Connection to MELSEC iQ-F and MELSEC-FX Series with Ver.1/ Ver.2 compatibles mixed

This section describes the setting of the GOT and CC-Link module (FX3U-16CCL-M) with Ver.1/Ver.2 compatibles mixed in the following system configuration.

Point

CC-Link module (FX3U-16CCL-M)

For details on the CC-Link module (FX3U-16CCL-M), refer to the following.

FX3U-16CCL-M USER'S MANUAL

System configuration

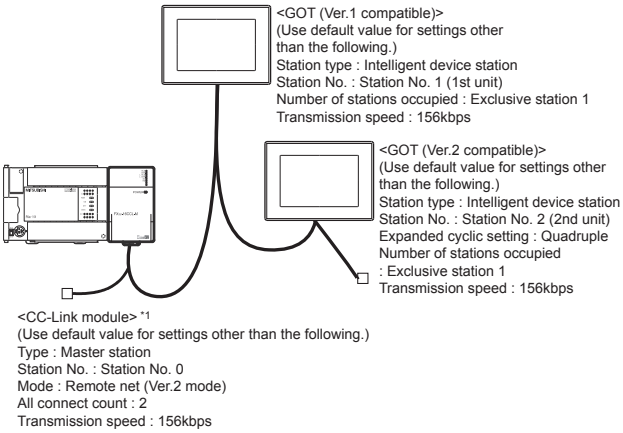

Switch setting of CC-Link module (FX3U-16CCL-M)

Set the station number setting switch, transmission speed/mode setting switch.

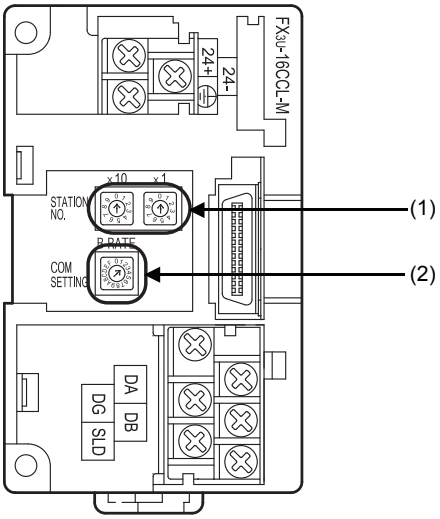

■Station number setting switch

Station number setting switch	Description	Set value	Setting necessity at GOT connection
STATION NO. ×10 ×1	Station number setting (master station)	0 (fixed)	○

○: Necessary △: As necessary ×: Not necessary

■Transmission speed/Mode setting switch

Transmission speed/Mode setting switch	Description	Set value	Setting necessity at GOT connection
B RATE COM SETTING	Transmission speed/Mode setting (Online: 156kbps)*1	0	○

○: Necessary △: As necessary ×: Not necessary

*1 Specify the same transmission speed as that of the GOT.

Point

When the switch setting has been changed

Turn the PLC CPU OFF then ON again, or reset the PLC CPU.

Parameter setting

■[Network parameter] of GX Works2

- Network parameter

	Setting Contents
Special Function Block No.	0
Operation Setting	Operation Setting
Type	Master Station
Master Station Data Link Type	PLC Parameter Auto Start
Mode	Remote Net(Ver.2 Mode)
Total Module Connected	2
Remote input(RX)	
Remote output(RY)	
Remote register(RWr)	
Remote register(RWw)	
Ver.2 Remote input(RX)	
Ver.2 Remote output(RY)	
Ver.2 Remote register(RWr)	
Ver.2 Remote register(RWw)	
Special relay(SB)	
Special register(SW)	
Retry Count	7
Automatic Reconnection Station Count	2
Standby Master Station No.	
PLC Down Select	Stop
Scan Mode Setting	
Delay Time Setting	
Station Information Setting	Station Information
Remote Device Station Initial Setting	Initial Setting
Interrupt Settings	

Item		Set value	Setting necessity at GOT connection
Special Function Block No.*1		0 to 7(Default: 0)	×
Operation Setting*1	Data Link Disorder Station Setting	[Hold input data]: No check	×
	Case of CPU STOP Setting	[Clears compulsorily]: No check	×
Type		master station (fixed)	○
Mode		Remote Net (Ver.2 Mode)	○
Total Module Connected		2	×
Retry Count*1		7	×
Automatic Reconnection Station Count*1		2	×
PLC Down Select*1		Stop	×
Station Information Setting		☞ • Station Information Setting	○
Remote Device Station initial Setting		(Use default value)	×

○: Necessary △: As necessary ×: Not necessary

*1 Set as necessary.

📖FX3U-16CCL-M USER'S MANUAL

• Station Information Setting

Station No.	Station Type	Expanded Cyclic Setting	Number of Occupied Stations	Remote Station Points	Reserve/Invalid Station Select
1/ 1	Ver.1 Intelligent Device Station	Single	Occupied Station 1	32Points	No Setting
2/ 2	Ver.2 Intelligent Device Station	Quadruple	Occupied Station 1	64Points	No Setting

Station information setting of station No.1 (GOT)

Item	Set value	Setting necessity at GOT connection
Station Type	Ver.1 Intelligent Device Station (fixed)	○
Number of Occupied Stations*1	Occupied Station 1	○
Reserve/Invalid Station Select	No Setting	○

○: Necessary △: As necessary ×: Not necessary

Station information setting of station No.2 (GOT)

Item	Set value	Setting necessity at GOT connection
Station Type	Ver.2 Intelligent Device Station (fixed)	○
Expanded Cyclic Setting*1	Quadruple	○
Number of Occupied Stations*1	Occupied Station 1	○
Reserve/Invalid Station Select	No Setting	○

○: Necessary △: As necessary ×: Not necessary

*1 Set the same setting as that of the GOT.

Point

When changing the network parameter

After writing the network parameter to the PLC CPU, operate the PLC CPU either turning OFF and then ON or resetting.

■Setting from sequence program

The parameter is written to the buffer memory, and the data link is automatically started when PLC CPU status changes from STOP to RUN.

Point

Connecting to MELSEC iQ-F Series

When connecting with MELSEC iQ-F series, it isn't possible to establish a network parameter in GX Works3. Set the network parameters in the sequence program.

- I/O signal of CC-Link module

📖FX3U-16CCL-M USER'S MANUAL

- Devices used by user

Device	Application
D0	Mode
D1	Number of connected modules
D2	Retry Count
D3	Automatic Reconnection Station Count
D4	PLC Down Select
D5	Data Link Disorder Station Setting
D6	Case of CPU STOP Setting
D20	Station information (1st unit)
D21	Station information (2nd unit)

- Buffer memory settings used in the present example

Buffer memory address Decimal (Hex)	Item	Set value
0(0H)	Mode	2 (Remote net (Ver.2 mode))
1(1H)	Number of connected modules	2 (2module)
2(2H)	Retry Count	7 (7times)
3(3H)	Automatic Reconnection Station Count	2 (2module)
6(6H)	PLC Down Select	0 (stop)
12(CH)	Data Link Disorder Station Setting	1 (Clear)
6(DH)	Case of CPU STOP Setting	0 (Refresh)
32(20H)	Station information (1st unit)*1	2301H
33(21H)	Station information (2nd unit)*1	C104H

*1 Details for the station data are shown below.
For 1) and 2) and 3), set the same station No. and number of station occupied and expanded cyclic as those of the GOT.

b15 to b12	b11 to b8	b7 to b0
3)	2)	1)

1) Station No. (Set the same station No. as that of the GOT.)
01H to 10H: Station No.1 to Station No.16

2) Number of stations occupied (Set the same setting of the number of station occupied as that of the GOT.)
1H: Exclusive station 1
2H: Exclusive station 2
3H: Exclusive station 3
4H: Exclusive station 4

3) Station type
2H: Ver.1 compatible intelligent device station
6H: Ver.2 compatible single intelligent device station
9H: Ver.2 compatible double intelligent device station
CH: Ver.2 compatible quadruple intelligent device station
FH: Ver.2 compatible octuple intelligent device station

• Example of sequence program

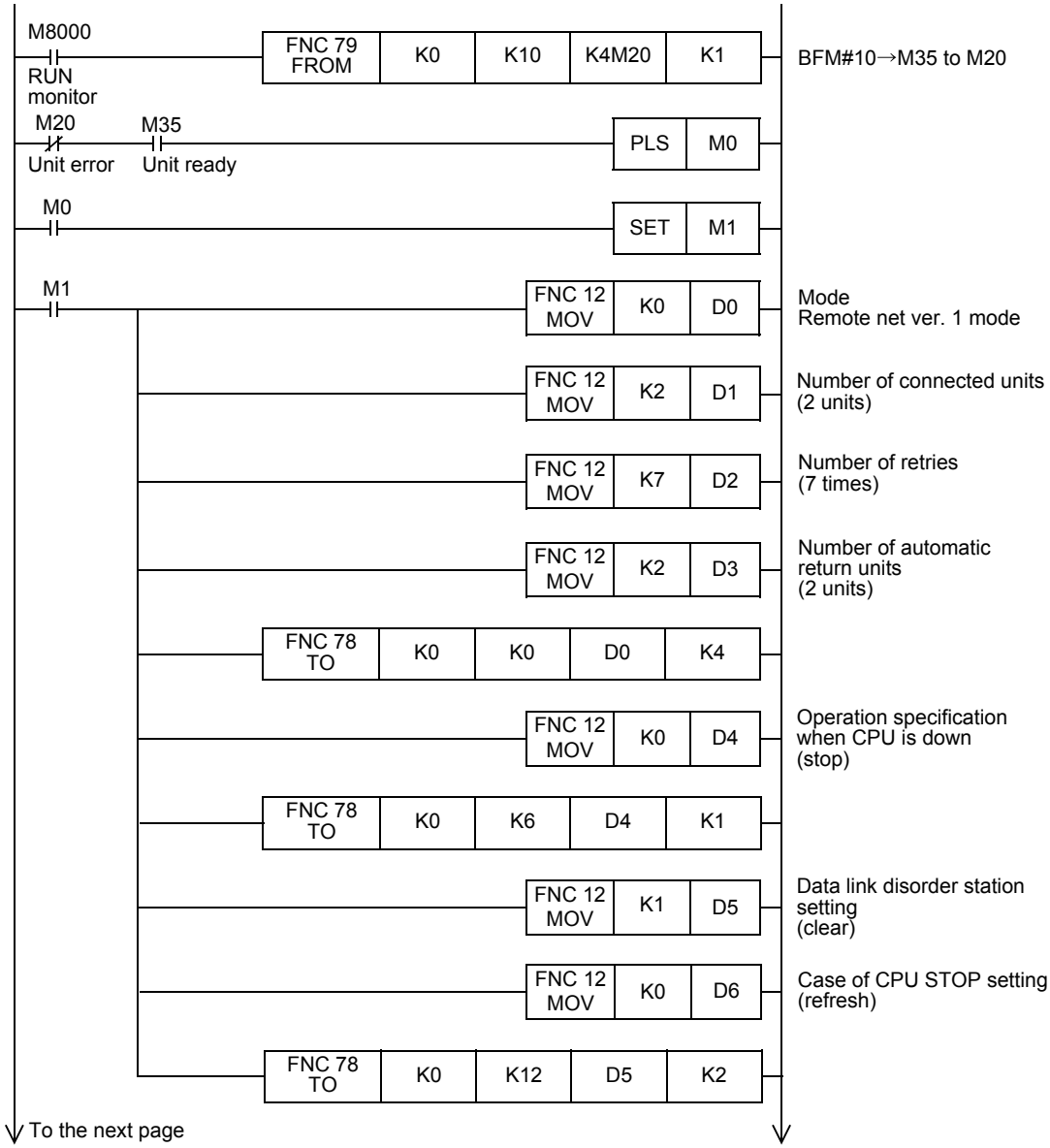

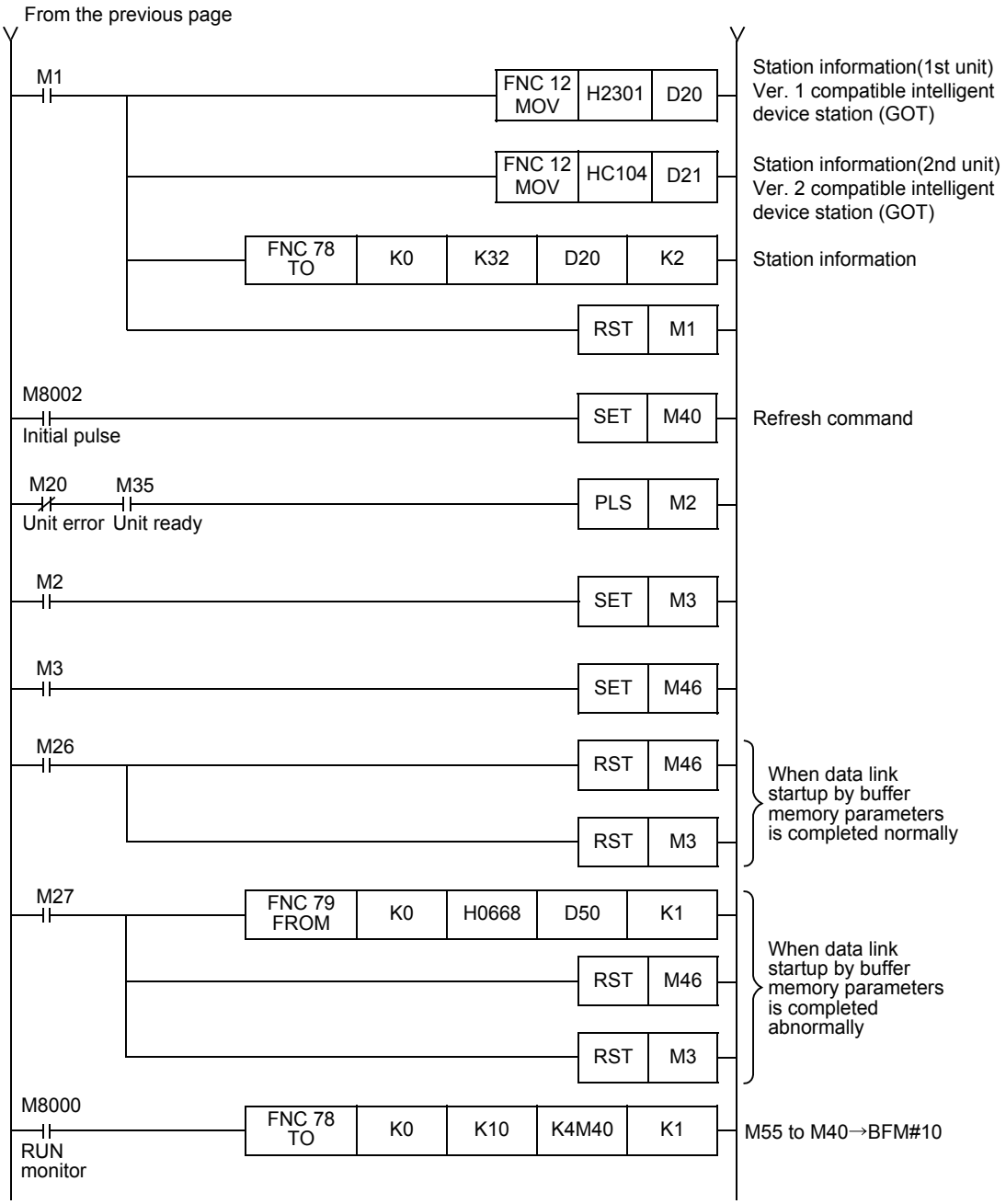

Point

When changing the sequence program

After writing the sequence program to the PLC CPU, operate the PLC CPU ether turning OFF and then ON or resetting.

[Controller Setting] of GT Designer3

■Controller Setting of Station No.1 (GOT)

Item	Set value
Station No.	1: Station No.1
Transmission Rate	0: Online 156kbps
Mode	Ver.1: Remote net (Ver.1 mode)
Expanded Cyclic	-
Number of stations occupied	1 Station
Input for Error Station	0: Clear
Retry	3times (Use default value)
Timeout Time	3sec (Use default value)
Delay Time	0ms (Use default value)
Transmission method	Cyclic

■Controller Setting of Station No.2 (GOT)

Item	Set value
Station No.	2: Station No.2
Transmission Rate	0: Online 156kbps
Mode	Ver.2: Remote net (Ver.2 mode)
Expanded Cyclic	Quadruple
Number of stations occupied	1 Station
Input for Error Station	0: Clear
Retry	3times (Use default value)
Timeout Time	3sec (Use default value)
Delay Time	0ms (Use default value)
Transmission method	Cyclic

Connection to MELSEC iQ-F Series with Ver.1/Ver.2 compatibles mixed

This section describes the setting of the GOT and CC-Link module (FX5-CCL-MS) with Ver.1/Ver.2 compatibles mixed in the following system configuration.

Point

CC-Link module (FX5-CCL-MS)

For details on the CC-Link module (FX5-CCL-MS), refer to the following.

Manuals of MELSEC iQ-F Series

System configuration

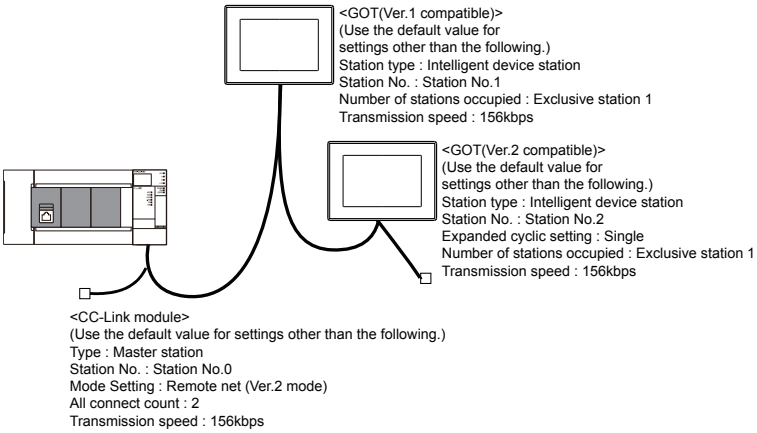

Module parameter setting of GX Works3

■[Module parameter] of GX Works3

- Module parameter

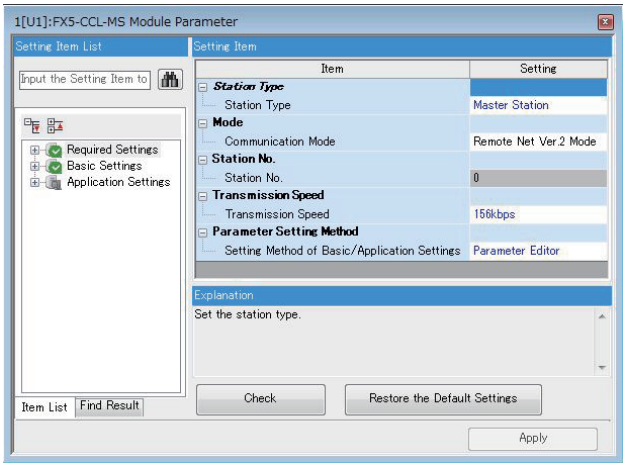

Item	Set value	Setting necessity at GOT connection
Station type	Master station	○
Mode	Remote net (Ver.2 mode)	○
Station No.	0 (fixed)	△
Transmission speed*1	156kbps	○
Parameter setting	Parameter	×

○: Necessary △: As necessary ×: Not necessary

*1 Adjust the settings with GOT settings.

• Link refresh setting

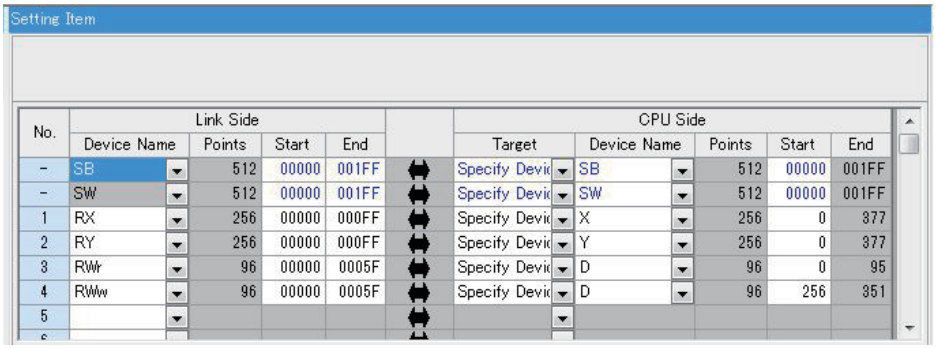

Item	Set value	Setting necessity at GOT connection
Special relay (SB) refresh device	Set as necessary.	△
Special register (SW) refresh device		△
Remote input (RX) refresh device		△
Remote output (RY) refresh device		△
Remote register (RWr) refresh device		△
Remote register (RWw) refresh device		△

○: Necessary △: As necessary ○: Not necessary

• CC-Link configuration setting

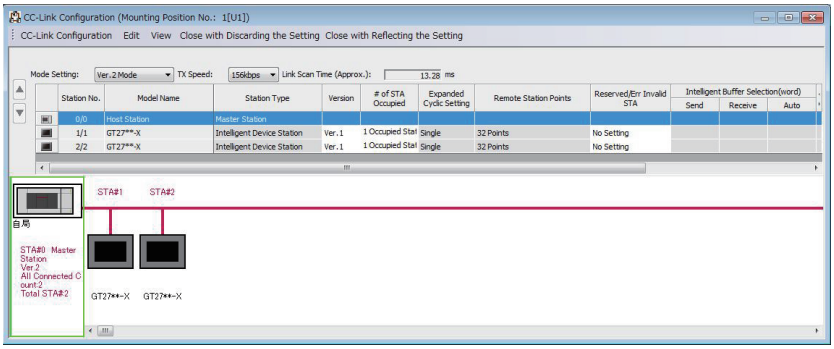

CC-Link configuration setting of station No.1 (GOT)

Item*1	Set value	Setting necessity at GOT connection
Station type	Ver.1 intelligent device station (fixed)	○
Exclusive station count*2	Exclusive station 1	○
Reserve/invalid station select	No setting	○
Intelligent buffer select (word)	(Use default value)	×

○: Necessary △: As necessary ×: Not necessary

CC-Link configuration setting of station No.2 (GOT)

Item*1	Set value	Setting necessity at GOT connection
Station type	Ver.2 intelligent device station (fixed)	○
Expanded cyclic setting*2	Single	○
Exclusive station count*2	Exclusive station 1	○
Reserve/invalid station select	No setting	○
Intelligent buffer select (word)	(Use default value)	×

○: Necessary △: As necessary ×: Not necessary

*1 When the [Mode] of the CC-Link module is set at [Remote net - (Ver. 2 mode)], [Remote station points] can be set.
[Remote station points] is a setting for the remote I/O station.
The default value (32 points) must be used on the GOT.

*2 Set the same setting as that of the GOT.

Point

When changing the module parameter

After writing module parameters to the PLC CPU, turn the PLC CPU OFF then back ON again, or reset the PLC CPU.

[Controller Setting] of GT Designer3

■Communication Settings of station No.1 (GOT)

Item	Set value
Station No.	1: Station No.1
Transmission Rate	0: Online 156kbps
Mode	Ver.1: Remote net (Ver.1 mode)
Expanded Cyclic	Single (Use default value)
Number of stations occupied	1 Station
Input for Error Station	0: Clear
Retry	3times (Use default value)
Timeout Time	3sec (Use default value)
Delay Time	0ms (Use default value)
Transmission method	Cyclic

■Communication Settings of station No.2 (GOT)

Item	Set value
Station No.	2: Station No.2
Transmission Rate	0: Online 156kbps
Mode	Ver.2: Remote net (Ver.2 mode)
Expanded Cyclic	Single (Use default value)
Number of stations occupied	1 Station
Input for Error Station	0: Clear
Retry	3times (Use default value)
Timeout Time	3sec (Use default value)
Delay Time	0ms (Use default value)
Transmission method	Cyclic

12.5 Precautions

Using cyclic transmission

■I/O signal for master station

Do not turn on the reserved output signals in the output signals (remote output: RY) to the GOT from the master station.
When the reserved output signal is turned on, the PLC system may be malfunctioned.
For the assignment of I/O signals in the GOT, refer to the following manual.
📖MODEL GT15-J61BT13 CC-Link communication unit User's Manual
📖GT15 CC-Link communication unit User's Manual

■Access range that can be monitored

The monitoring range of remote I/O (RX and RY) and that of the remote registers (RWr and RWw) vary according to the mode in the master station of the CC-Link system.

Mode of master station	Applicable of monitoring	
	Data for each station compatible with CC-Link ver.1	Data for each station compatible with CC-Link ver.2
Remote net mode	○	-
Remote net ver.1 mode	○	-
Remote net ver.2 mode	○	○*1
Remote net additional mode	○	○*1

○: Applicable ×: N/A(All "0") -: N/A of system configuration
*1 Monitoring is applicable only when MODEL GT15-J61BT13 CC-Link communication unit is used.

■When GOT malfunctions, the cyclic output status remains the same as before becoming faulty.

For transient transmission

■CC-Link module of target station

Mount the CC-Link module of function version B or later and software version J or later to the PLC CPU when performing the following CC-Link modules and transient transmission.
Only cyclic transmission can be communicated with the CC-Link module of function version A or before and software version I or before.

- AJ61BT11
- A1SJ61BT11
- AJ61QBT11
- A1SJ61QBT11

■Access range that can be monitored

The GOT can access to the PLC CPU mounting the master and local station of the CC-Link System.
It cannot access another network via the CC-Link module.

Connecting with CC-Link Ver.1 compatible

When connecting with CC-Link Ver.1 compatible, the device setting must be set within the range of the specifications of the controller. When a device number outside the range is set, the GOT may not monitor the controller correctly.

GOT startup in the CC-Link connection (intelligent device station)

For CC-Link connection (intelligent device station), the data link is started approximately 10 seconds after the GOT startup.

When a network error occurs in the system alarm

In the CC-Link connection (intelligent device station), when a network error occurs in the system alarm, the system alarm display cannot be canceled even though the causes are removed.
To cancel the system alarm display, restart the GOT.

Connection in the multiple CPU system

When the GOT is connected to multiple CPU system, the following time is taken until when the PLC runs.
MELSEC iQ-R series, Motion CPU (MELSEC iQ-R series), QCPU (Q mode), Motion CPU (Q series): 10 seconds or more
MELDAS C70: 18 seconds or more
When the GOT starts before the PLC runs, a system alarm occurs.Adjust the opening screen time in the GOT setup so that no system alarm occurs.
GT Designer3 (GOT2000) Screen Design Manual

Connection to LCPU

LCPU may diagnose (check file system, execute recovering process, etc.) the SD memory card when turning on the power or when resetting. Therefore, it takes time until the SD memory card becomes available. When the GOT starts before the SD card becomes available, a system alarm occurs. Adjust the opening screen time in the GOT setup so that no system alarm occurs.
GT Designer3 (GOT2000) Screen Design Manual

Connection to Q17nDCPU, Q170MCPU, Q170MSCPU(-S1), CNC C70, CRnQ-700, or CR800-Q (Q172DSRCPU)

The Q17nDCPU, Q170MCPU, Q170MSCPU(-S1), CNC C70, CRnQ-700, and CR800-Q (Q172DSRCPU) are applicable to CC-Link Ver.2 only.
For connecting to the CC-Link (ID) network system, set the CC-Link (ID) network system to the CC-Link Ver.2 mode.

Connection to Q170MCPU or Q170MSCPU(-S1)

Set [CPU No.] to 2 in the device setting to monitor the device of the Motion CPU area (CPU No. 2).
When [CPU No.] is set to 0 or 1, the device on the PLC CPU area (CPU No. 1) is monitored.
When [CPU No.] is set to the number other than 0 to 2, a communication error occurs and the monitoring cannot be executed.
For the setting of [CPU No.], refer to the following.
GT Designer3 (GOT2000) Screen Design Manual

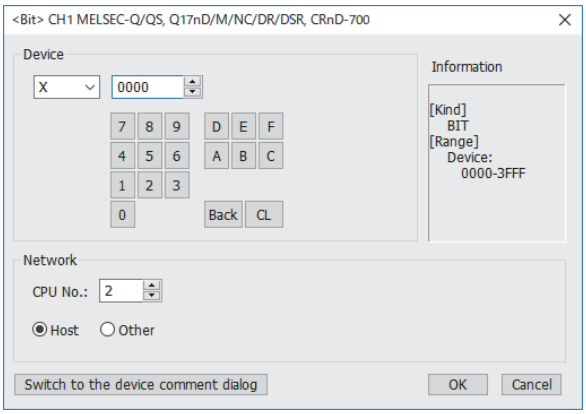

Connection to RnSFCPU

The RnSFCPU takes 10 seconds or more to run.
If the GOT is started before the RnSFCPU runs, a system alarm occurs.
To prevent a system alarm from occurring, adjust the title display time in the [GOT Setup] dialog.
GT Designer3 (GOT2000) Screen Design Manual

Connecting one PLC with multiple GOTs

When multiple GOTs access one PLC simultaneously, writing (transient/cyclic) and reading (transient) data to/from the GOTs may slow down.

The following countermeasures can prevent this slowdown.

<Countermeasures>

■Improving the PLC's response speed

Insert a COM instruction on the PLC to increase the response speed. Note that caution is required as the scan time will increase.

■Designing screens using cyclic devices

Create screens using cyclic devices instead of transient devices.

■Splitting connection destinations of the GOTs into multiple systems

Add a master/local module to the PLC and split the connection destinations of the GOTs into multiple systems.Improve the current system configuration.

(Example of current system configuration)

In the following system configuration, the GOTs access one module.

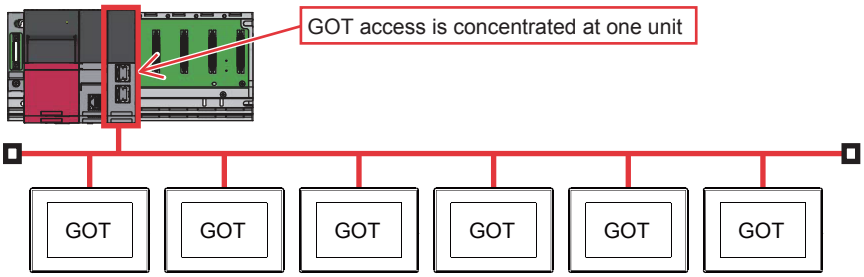

(Improvement measure)

- Adding a module to the PLC

Add a module to the PLC to disperse access destinations for the GOTs.

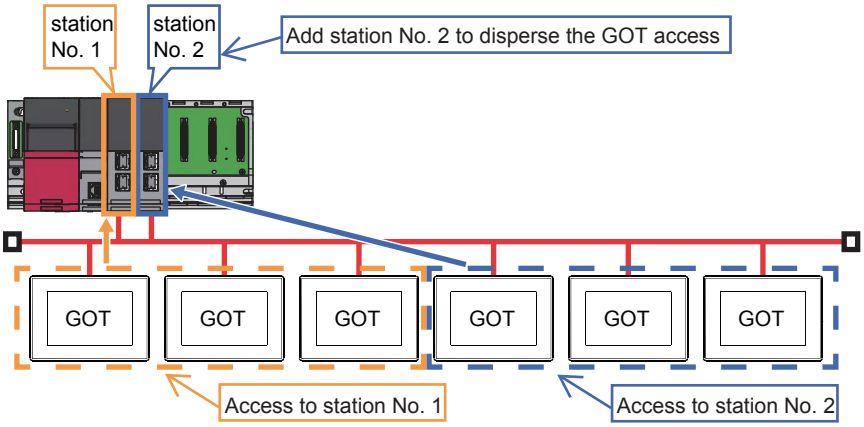

• Splitting the network

Split the network to disperse accesses from the GOTs.

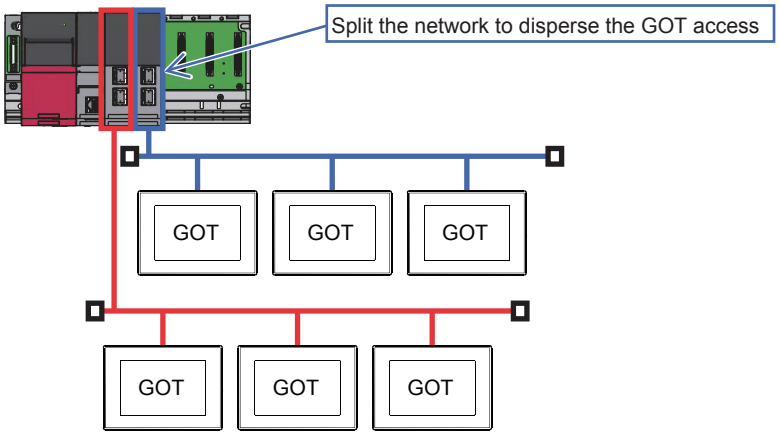

MEMO

13 CC-Link CONNECTION (Via G4)

- Page 783 Connectable Model List
- Page 789 System Configuration
- Page 794 Connection Diagram
- Page 796 GOT Side Settings
- Page 802 PLC Side Settings
- Page 812 Precautions

13.1 Connectable Model List

PLC/Motion CPU

The following table shows the connectable models.

Series	Model name	Clock	Communication type	Connectable model	Refer to
MELSEC iQ-R Series	R00CPU	○	CC-Link (G4)	-	-
	R01CPU				
	R02CPU				
	R04CPU				
	R08CPU				
	R16CPU				
	R32CPU				
	R120CPU				
	R08PCPU				
	R16PCPU				
	R32PCPU				
	R120PCPU				
	R04ENCPU				
	R08ENCPU				
	R16ENCPU				
	R32ENCPU				
	R120ENCPU				
	R08PSFCPU				
	R16PSFCPU				
	R32PSFCPU				
	R120PSFCPU				
	R08SFCPU				
	R16SFCPU				
	R32SFCPU				
	R120SFCPU				
Motion CPU (MELSEC iQ-R Series)	R16MTCPU	○	CC-Link (G4)	-	-
	R32MTCPU				
	R64MTCPU				
C Controller module (MELSEC iQ-R Series)	R12CCPU-V	○	CC-Link (G4)	-	-
MELSECWin CPU (MELSEC iQ-R Series)	R102WCPU-W	×	CC-Link (G4)	-	-
CNC C80	R16NCCPU-S1	○	CC-Link (G4)	-	-

Series	Model name	Clock	Communication type	Connectable model	Refer to
Robot controller (MELSEC iQ-R Series)	CR800-R(R16RTCPU)	○	CC-Link (G4)	-	-
CC-Link IE Field Network head module	RJ72GF15-T2	×	CC-Link (G4)	-	-
MELSEC iQ-F Series	FX5U	○	-	-	-
	FX5UC				
	FX5UJ				
	FX5S				
MELSEC-Q (Q mode)	Q00JCPU	○	CC-Link (G4)	GT27 GT25 GT23 GT21 07W GT21 05Q GT21 04R GT21 03P 04P ET/R4 GT21 03P 04P R4 GT21 03P 04P R2 GS25 GS21	☞ Page 789 Connection to QCPU (Q mode)
	Q00CPU*1				
	Q01CPU*1				
	Q02CPU*1				
	Q02HCPU*1 Q06HCPU*1 Q12HCPU*1 Q25HCPU*1				
	Q02PHCPU Q06PHCPU Q12PHCPU Q25PHCPU	○	CC-Link (G4)	GT27 GT25 GT23 GT21 07W GT21 05Q GT21 04R GT21 03P 04P ET/R4 GT21 03P 04P R4 GT21 03P 04P R2 GS25 GS21	☞ Page 789 Connection to QCPU (Q mode)
	Q12PRHCPU (Main base)				
	Q25PRHCPU (Main base)				
	Q12PRHCPU (Extension base)				
	Q25PRHCPU (Extension base)				
	Q00UJCPU Q00UJCPU-S8	○	CC-Link (G4)	GT27 GT25 GT23 GT21 07W GT21 05Q GT21 04R GT21 03P 04P ET/R4 GT21 03P 04P R4 GT21 03P 04P R2 GS25 GS21	☞ Page 789 Connection to QCPU (Q mode)
	Q00UCPU Q01UCPU Q02UCPU Q03UDCPU				
	Q04UDHCPU Q06UDHCPU Q10UDHCPU Q13UDHCPU Q20UDHCPU Q26UDHCPU				
	Q03UDECPU Q04UDEHCPU Q06UDEHCPU Q10UDEHCPU Q13UDEHCPU Q20UDEHCPU Q26UDEHCPU Q50UDEHCPU Q100UDEHCPU				
	Q03UDVCPU Q04UDVCPU Q06UDVCPU Q13UDVCPU Q26UDVCPU				
C Controller module (Q Series)	Q12DCCPU-V*2 Q24DHCCPU-V/VG Q24DHCCPU-LS Q26DHCCPU-LS	○	CC-Link(G4)	GT27 GT25 GT23 GT21 07W GT21 05Q GT21 04R GT21 03P 04P ET/R4 GT21 03P 04P R4 GT21 03P 04P R2 GS25 GS21	☞ Page 789 Connection to QCPU (Q mode)

Series	Model name	Clock	Communication type	Connectable model	Refer to
MELSEC-QS	QS001CPU	○	-	-	-
MELSEC-L	L02CPU L06CPU L26CPU L26CPU-BT L02CPU-P L06CPU-P L26CPU-P L26CPU-PBT L02SCPU L02SCPU-P	○	CC-Link(G4)	GT 27 GT 25 GT 23 GT 21 07W GT 21 05Q GT 21 04R GT 21 03P 04P ET/R4 GT 21 03P 04P R4 GT 21 03P 04P R2 GS 25 GS 21	☞ Page 791 Connection to LCPU
MELSEC-Q (A mode)	Q02CPU-A Q02HCPU-A Q06HCPU-A	○	-	-	-
MELSEC-QnA (QnACPU)	Q2ACPU Q2ACPU-S1 Q3ACPU Q4ACPU Q4ARCPU	○	-	-	-
MELSEC-QnA (QnASCPU)	Q2ASCPU Q2ASCPU-S1 Q2ASHCPU Q2ASHCPU-S1	○	-	-	-
MELSEC-A (AnCPU)	A2UCPU A2UCPU-S1 A3UCPU A4UCPU A2ACPU A2ACPUP21 A2ACPUR21 A2ACPU-S1 A2ACPUP21-S1 A2ACPUR21-S1 A3ACPU A3ACPUP21 A3ACPUR21 A1NCPU A1NCPUP21 A1NCPUR21 A2NCPU A2NCPUP21 A2NCPUR21 A2NCPU-S1 A2NCPUP21-S1 A2NCPUR21-S1 A3NCPU A3NCPUP21 A3NCPUR21	○	-	-	-
MELSEC-A (AnSCPU)	A2USCPU	○	-	-	-
	A2USCPU-S1				
	A2USHCPU-S1				
	A1SCPU				
	A1SCPUC24-R2				
	A1SHCPU				
	A2SCPU				
	A2SCPU-S1				
	A2SHCPU				
	A2SHCPU-S1				
	A1SJCPU				
	A1SJCPU-S3				
	A1SJHCPU				

Series	Model name	Clock	Communication type	Connectable model	Refer to
MELSEC-A	A0J2HCPU	×	-	-	-
	A0J2HCPUP21				
	A0J2HCPUR21				
	A0J2HCPU-DC24				
	A2CCPU	○	-	-	-
	A2CCPUP21				
	A2CCPUR21				
	A2CCPUC24				
	A2CCPUC24-PRF				
	A2CJCPU-S3				
	A1FXCPU				
Motion CPU (Q Series)	Q172CPU*3*4	○	CC-Link (G4)	GT27 GT25 GT23 GT21 07W GT21 05Q GT21 04R GT21 03P 04P ET/R4 GT21 03P 04P R4 GT21 03P 04P R2 GS25 GS21	☞ Page 789 Connection to QCPU (Q mode)
	Q173CPU*3*4				
	Q172CPUN*3				
	Q173CPUN*3				
	Q172HCPU				
	Q173HCPU				
	Q172DCPU				
	Q173DCPU				
	Q172DCPU-S1				
	Q173DCPU-S1				
	Q172DSCPU				
	Q173DSCPU				
	Q170MCPU*5				
	Q170MSCPU*6				
	Q170MSCPU-S1*6				
	MR-MQ100	○	-	-	-
Motion CPU (A Series)	A273UCPU	○	-	-	-
	A273UHCPU				
	A273UHCPU-S3				
	A373UCPU				
	A373UCPU-S3				
	A171SCPU				
	A171SCPU-S3				
	A171SCPU-S3N				
	A171SHCPU				
	A171SHCPUN				
	A172SHCPU				
	A172SHCPUN				
	A173UHCPU				
	A173UHCPU-S1				
MELSEC-WS	WS0-CPU0	×	-	-	-
	WS0-CPU1				
	WS0-CPU3				
MELSECNET/H Remote I/O station	QJ72LP25-25	×	-	-	-
	QJ72LP25G				
	QJ72BR15				
CC-Link IE Field Network head module	LJ72GF15-T2	×	-	-	-

Series	Model name	Clock	Communication type	Connectable model	Refer to
CC-Link IE Field Network Ethernet adapter module	NZ2GF-ETB	×	-	-	-
CNC C70	Q173NCCPU	○	CC-Link (G4)	GT27 GT25 GT23 GS25	☞ Page 789 Connection to QCPU (Q mode)
Robot controller (Q Series)	CRnQ-700 (Q172DRCPU) CR750-Q (Q172DRCPU) CR751-Q (Q172DRCPU) CR800-Q (Q172DSRCPU)	○	CC-Link (G4)	GT27 GT25 GT23 GT21 07W GT21 05Q GT21 04R GT21 03P 04P ET/R4 GT21 03P 04P R4 GT21 03P 04P R2 GS25 GS21	☞ Page 789 Connection to QCPU (Q mode)
MELSEC-FX	FX0	×	-	-	-
	FX0S				
	FX0N				
	FX1				
	FX2	×			
	FX2C				
	FX1S	○			
	FX1N				
	FX2N				
	FX1NC				
	FX2NC	×			
	FX3S	○			
	FX3G				
	FX3GC				
	FX3GE				
	FX3U				
	FX3UC				

*1 When in multiple CPU system configuration, use CPU function version B or later.
*2 Use only modules with the upper five digits of the serial No. later than 12042.
*3 When using SV13, SV22, or SV43, use a Motion CPU with the following version of OS installed.
- SW6RN-SV13Q□: 00H or later
- SW6RN-SV22Q□: 00H or later
- SW6RN-SV43Q□: 00B or later

*4 Use main modules with the following product numbers.
- Q172CPU: Product number N******* or later
- Q173CPU: Product number M******* or later

*5 Only the first step can be used on the extension base unit (Q52B/Q55B).
*6 The extension base unit (Q5□B/Q6□B) can be used.

CC-Link module/peripheral module

CPU series	Model name	
	CC-Link module	Peripheral module
MELSEC-Q (Q mode) C Controller module (Q Series) Motion CPU (Q Series) CNC C70 Robot controller (Q Series)	QJ61BT11 QJ61BT11N	AJ65BT-G4-S3 AJ65BT-R2N
MELSEC-L	LJ61BT11	

13.2 System Configuration

Connection to QCPU (Q mode)

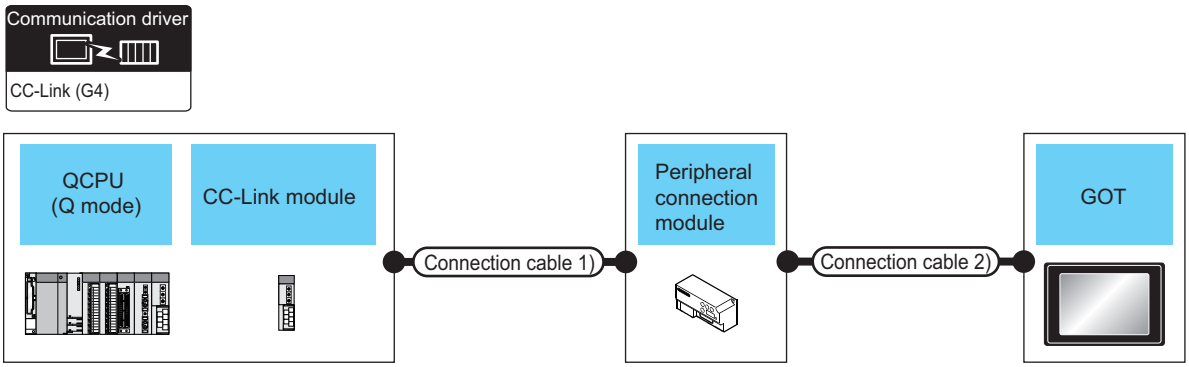

PLC		Connection cable 1)		Peripheral connection module		Connection cable 2)		GOT		Number of connectable equipment
Model name	CC-Link module *1	Cable model	Max. distance	Model name	Communication type	Cable model Connection diagram number	Max. distance	Option device*7	Model	
MELSEC-Q (Q mode) C Controller module (Q Series) Robot controller (Q Series)	QJ61BT11 QJ61BT11N	CC-Link dedicated cable *2	*3	AJ65BT-R2N	RS-232	GT09-C30R2-9P or User preparing Page 794 RS-232 connection diagram 1)	15m	- (Built into GOT)	GT27 GT25 GT23 GT21 07W GT21 05Q GS25 GS21	1 GOT for 1 peripheral connection module
								GT15-RS2-9P	GT27 GT25	
								GT10-C02H-6PT9P*6	GT21 03P 04P R4 GT21 03P 04P R2	
						User preparing Page 794 RS-232 connection diagram 2)	15m	- (Built into GOT)	GT21 04R GT21 03P 04P R2	

PLC		Connection cable 1)		Peripheral connection module		Connection cable 2)		GOT		Number of connectable equipment
Model name	CC-Link module *1	Cable model	Max. distance	Model name	Communication type	Cable model Connection diagram number	Max. distance	Option device*7	Model	
MELSEC-QC Controller module (Q Series)	QJ61BT11 QJ61BT11N	CC-Link dedicated cable*2	*3	AJ65BT-G4-S3	RS-422	GT01-C30R4-25P(3m) GT01-C100R4-25P(10m) GT01-C200R4-25P(20m) GT01-C300R4-25P(30m)	30m	- (Built into GOT)	GT27 GT25 GT23 GT21 07W GT21 05Q GS25 GS21	1 GOT for 1 peripheral connection module
								GT15-RS4-9S	GT27 GT25	
								GT10-C02H-9SC	GT21 04R GT21 03P 04P R4	
						GT21-C30R4-25P5(3m) GT21-C100R4-25P5(10m) GT21-C200R4-25P5(20m) GT21-C300R4-25P5(30m) *5	30m	- (Built into GOT)	GT21 03P 04P ET/R4	
						GT10-C30R4-25P(3m) GT10-C100R4-25P(10m) GT10-C200R4-25P(20m) GT10-C300R4-25P(30m) *4	30m	- (Built into GOT)	GT21 04R GT21 03P 04P R4	

*1 For the system configuration of the CC-Link module, refer to the following manual.
CC-Link System Master/Local Module User's Manual QJ61BT11N

*2 For the specifications and inquiries of the CC-Link dedicated cable, refer to the following.
CC-Link Partner Association's home page: http://www.cc-link.org/

*3 The maximum overall extension cable length and the length between stations vary depending on the cable type to be used and the transmission speed.
For details, refer to the following manual.
CC-Link System Master/Local Module User's Manual QJ61BT11N

*4 For the connection to GOT, refer to the connection diagram.
☞ Page 795 RS-422 connection diagram 1)

*5 For the connection to GOT, refer to the connection diagram.
☞ Page 795 RS-422 connection diagram 2)

*6 When a GT10-C02H-6PT9P unit of the sub version A or B is used, do not ground the case of the D-sub (9-pin) connector.

*7 GT25-W and GT2505-V do not support option devices.

Connection to LCPU

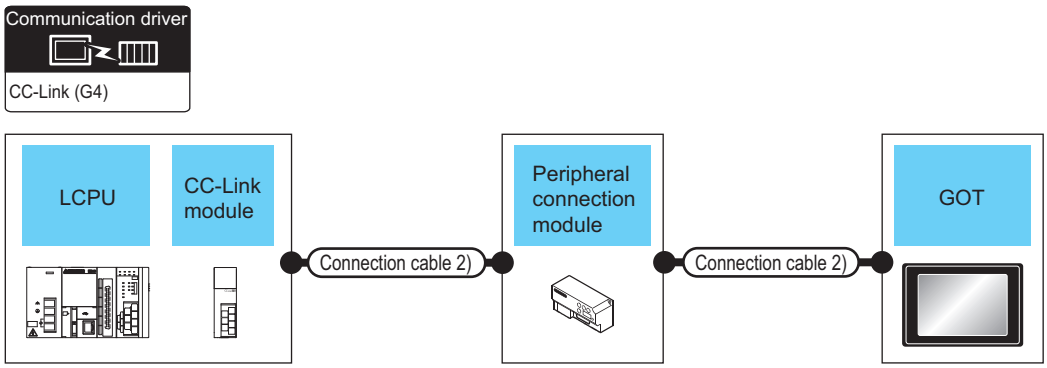

PLC		Connection cable 1)		Peripheral connection module		Connection cable 2)		GOT		Number of connectable equipment
Model name	**CC-Link module** *1	**Cable model**	**Max. distance**	**Model name**	**Communication type**	**Cable model Connection diagram number**	**Max. distance**	**Option device** *7	**Model**	
L02CPU L06CPU L26CPU L26CPU-BT L02CPU-P L06CPU-P L26CPU-P L26CPU-PBT L02SCPU L02SCPU-P	LJ61BT11	CC-Link dedicated cable *2	*3	AJ65BT-R2N	RS-232	GT09-C30R2-9P or User preparing Page 794 RS-232 connection diagram 1)	15m	- (Built into GOT)	GT27 GT25 GT23 GT21 07W GT21 05Q GS25 GS21	1 GOT for 1 peripheral connection module
								GT15-RS2-9P	GT27 GT25	
								GT10-C02H-6PT9P *6	GT21 03P 04P R4 GT21 03P 04P R2	
						User preparing Page 794 RS-232 connection diagram 2)	15m	- (Built into GOT)	GT21 04R GT21 03P 04P R2	

PLC		Connection cable 1)		Peripheral connection module		Connection cable 2)		GOT		Number of connectable equipment
Model name	CC-Link module *1	Cable model	Max. distance	Model name	Communication type	Cable model Connection diagram number	Max. distance	Option device *7	Model	
L02CPU L26CPU-BT L02CPU-P L26CPU-PBT	LJ61BT11	CC-Link dedicated cable *2	*3	AJ65BT-G4-S3	RS-422	GT01-C30R4-25P(3m) GT01-C100R4-25P(10m) GT01-C200R4-25P(20m) GT01-C300R4-25P(30m)	30m	- (Built into GT)	GT27 GT25 GT23 GT21 07W GT21 05Q GS25 GS21	1 GOT for 1 peripheral connection module
								GT15-RS4-9S	GT27 GT25	
								GT10-C02H-9SC	GT21 04R GT21 03P 04P R4	
						GT21-C30R4-25P5(3m) GT21-C100R4-25P5(10m) GT21-C200R4-25P5(20m) GT21-C300R4-25P5(30m) *5	30m	- (Built into GT)	GT21 03P 04P ET/R4	
						GT10-C30R4-25P(3m) GT10-C100R4-25P(10m) GT10-C200R4-25P(20m) GT10-C300R4-25P(30m) *4	30m	- (Built into GT)	GT21 04R GT21 03P 04P R4	
L26CPU-BT L26CPU-PBT	-	CC-Link dedicated cable *2	*3	AJ65BT-R2N	RS-232	GT09-C30R2-9P or User preparing Page 794 RS-232 connection diagram 1)	15m	- (Built into GT)	GT27 GT25 GT23 GT21 07W GT21 05Q GS25 GS21	1 GOT for 1 peripheral connection module
								GT15-RS2-9P	GT27 GT25	
								GT10-C02H-6PT9P *6	GT21 03P 04P R4 GT21 03P 04P R2	
						User preparing Page 794 RS-232 connection diagram 2)	15m	- (Built into GT)	GT21 04R GT21 03P 04P R2	

PLC		Connection cable 1)		Peripheral connection module		Connection cable 2)		GOT		Number of connectable equipment
Model name	CC-Link module *1	Cable model	Max. distance	Model name	Communication type	Cable model Connection diagram number	Max. distance	Option device *7	Model	
L26CPU-BT L26CPU-PBT	-	CC-Link dedicated cable *2	*3	AJ65BT-G4-S3	RS-422	GT01-C30R4-25P(3m) GT01-C100R4-25P(10m) GT01-C200R4-25P(20m) GT01-C300R4-25P(30m)	30m	- (Built into GOT)	GT27 GT25 GT23 GT21 07W GT21 05Q GS25 GS21	1 GOT for 1 peripheral connection module
								GT15-RS4-9S	GT27 GT25	
								GT10-C02H-9SC	GT21 04R GT21 03P 04P R4	
						GT21-C30R4-25P5(3m) GT21-C100R4-25P5(10m) GT21-C200R4-25P5(20m) GT21-C300R4-25P5(30m) *5	30m	- (Built into GOT)	GT21 03P 04P ET/R4	
						GT10-C30R4-25P(3m) GT10-C100R4-25P(10m) GT10-C200R4-25P(20m) GT10-C300R4-25P(30m) *4	30m	- (Built into GOT)	GT21 04R GT21 03P 04P R4	

*1 For the system configuration of the CC-Link module, refer to the following manual.
MELSEC-L CC-Link System Master/Local Module User's Manual

*2 For the specifications and inquiries of the CC-Link dedicated cable, refer to the following.
CC-Link Partner Association's home page: http://www.cc-link.org/

*3 The maximum overall extension cable length and the length between stations vary depending on the cable type to be used and the transmission speed.
For details, refer to the following manual.
MELSEC-L CC-Link System Master/Local Module User's Manual

*4 For the connection to GOT, refer to the connection diagram.
Page 795 RS-422 connection diagram 1)

*5 For the connection to GOT, refer to the connection diagram.
Page 795 RS-422 connection diagram 2)

*6 When a GT10-C02H-6PT9P unit of the sub version A or B is used, do not ground the case of the D-sub (9-pin) connector.

*7 GT25-W and GT2505-V do not support option devices.

13.3 Connection Diagram

The following diagram shows the connection between the GOT and the PLC.

RS-232 cable

Connection diagram

■RS-232 connection diagram 1)

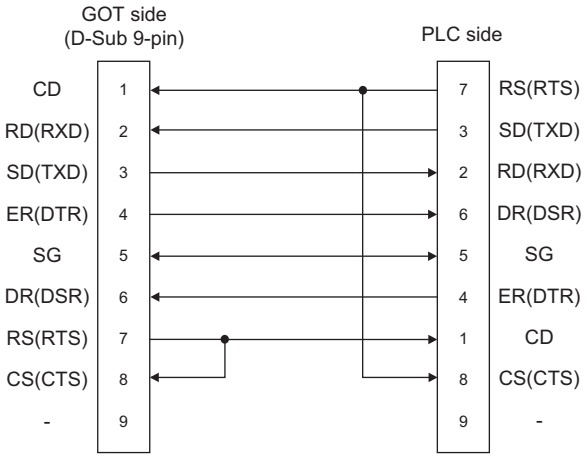

■RS-232 connection diagram 2)

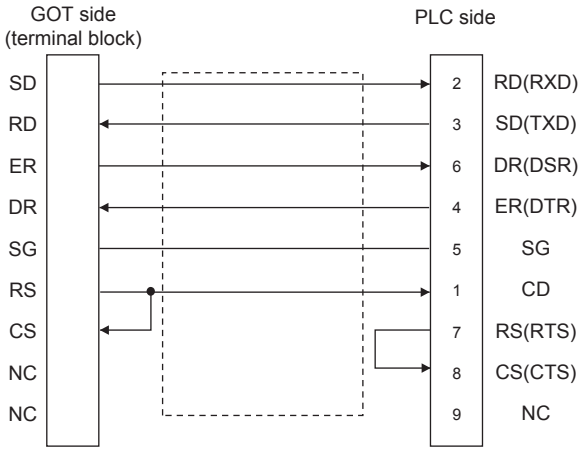

Precautions when preparing a cable

■Cable length

The length of the RS-232 cable must be 15m or less.

■GOT side connector

For the GOT side connector, refer to the following.

☞ Page 64 GOT connector specifications

RS-422 cable

Connection diagram

■RS-422 connection diagram 1)

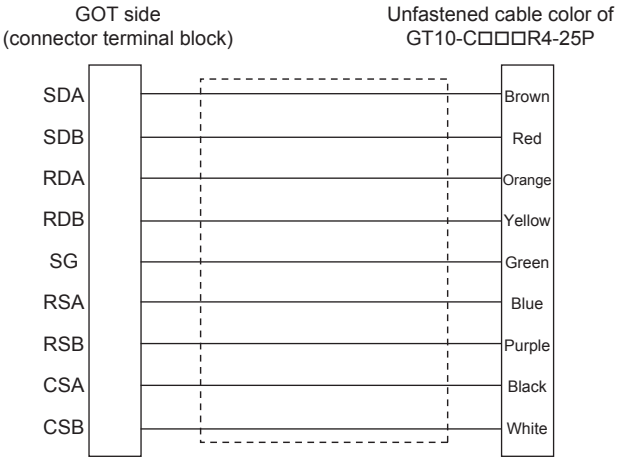

■RS-422 connection diagram 2)

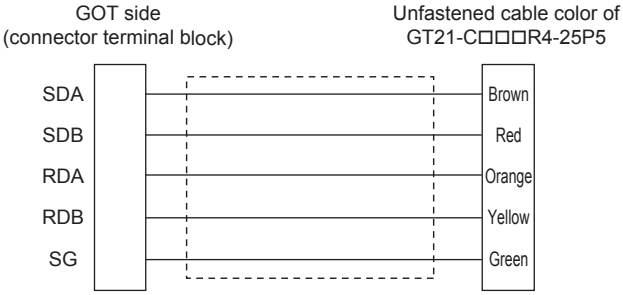

Precautions when preparing a cable

■Cable length

The length of the RS-422 cable must be within the maximum distance specifications.

■GOT side connector

For the GOT side connector, refer to the following.

☞ Page 64 GOT connector specifications

Connecting terminating resistors

■GOT side

When connecting a PLC to the GOT, a terminating resistor must be connected to the GOT.

- For GT27, GT25 (except GT2505-V), GT23, GS25

Set the terminating resistor setting switch of the GOT main unit to "Disable".

- For GT2505-V, GT21

Set the terminating resistor selector of the GOT main unit to "330Ω".

- For GS21

Since the terminating resistor is fixed to 330 Ω, no setting is required for the terminating resistor.

For the procedure to set the terminating resistor, refer to the following.

☞ Page 64 GOT connector specifications

13.4 GOT Side Settings

Setting communication interface (Controller Setting)

Set the channel of the connected equipment.

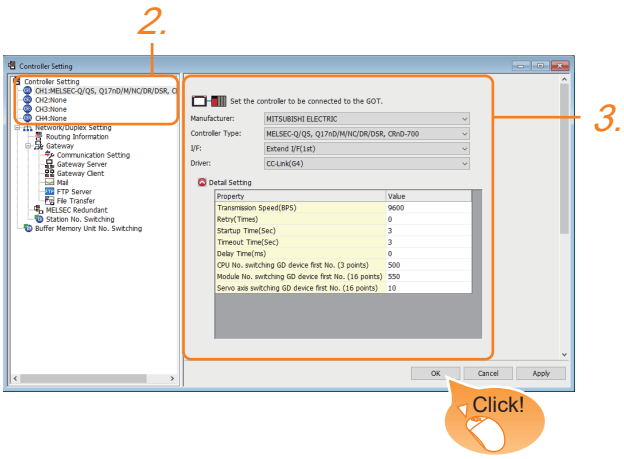

1. Select [Common] → [Controller Setting] from the menu.

2. In the [Controller Setting] window, select the channel No. to be used from the list menu.

3. Set the following items.

- [Manufacturer]: [MITSUBISHI ELECTRIC]
- [Controller Type]: Configure the setting according to the controller to be connected.
- [I/F]: Interface to be used
- [Driver]: [CC-Link(G4)]
- [Detail Setting]: Configure the settings according to the usage environment.

☞ Page 797 Communication detail settings

4. When you have completed the settings, click the [OK] button.

Point

The settings of connecting equipment can be confirmed in [I/F Communication Setting].
For details, refer to the following:
☞ Page 54 I/F communication setting

Communication detail settings

Make the settings according to the usage environment.

Property	Value
Transmission Speed(BPS)	9600
Retry(Times)	0
Startup Time(Sec)	3
Timeout Time(Sec)	3
Delay Time(ms)	0
CPU No. switching GD device first No. (3 points)	500
Module No. switching GD device first No. (16 points)	550
Servo axis switching GD device first No. (16 points)	10

Item	Description	Range
Transmission Speed	Set this item when change the transmission speed used for communication with the connected equipment. (Default: 9600bps)	9600bps, 19200bps, 38400bps, 57600bps, 115200bps
Retry	Set the number of retries to be performed when a communication timeout occurs. (Default: 0time)	0 to 5times
Startup Time	Specify the time period from the GOT startup until GOT starts the communication with the PLC CPU. (3sec(fixed))	3sec(fixed)
Timeout Time	Set the time period for a communication to time out.(Default: 3sec)	1 to 30sec
Delay time	Set this item to adjust the transmission timing of the communication request from the GOT. (Default: 0ms)	0 to 300ms
CPU No. switching GD device first No. (3 points)	Set the start device number of the GD devices for CPU No. switching. (Default: 500) For the details, refer to the following. ☞ Page 798 Start device number of the GD devices for CPU number switching	<For GT27, GT25, GT23, GS25> 0 to 65520 <For GT21, GS21> 0 to 2032
Module No. switching GD device first No. (16 points)	Set the start device number of the GD devices for module No. switching. (Default: 550) For the details, refer to the following. ☞ Page 799 Start device number of the GD devices for module number switching	<For GT27, GT25, GT23, GS25> 0 to 65520 <For GT21, GS21> 0 to 2032
Servo axis switching GD device first No. (16 points)	Set the servo axis switching GD device first No. (Default: 10) For the details, refer to the following. ☞ Page 800 Servo axis switching GD device first No.	<For GT27, GT25, GT23, GS25> 0 to 65520 <For GT21, GS21> 0 to 2032

Point

• Communication interface setting by the Utility

The communication interface setting can be changed on the Utility's [Communication Settings] after writing [Controller Setting] of project data.

For details on the Utility, refer to the following manual.

📖GOT2000 Series User's Manual (Utility)

• Precedence in communication settings

When settings are made by GT Designer3 or the Utility, the latest setting is effective.

Start device number of the GD devices for CPU number switching

■Specifying a CPU number with a device

[CPU No.] can be specified with the GOT internal registers (GD devices) by specifying a value (100 to 102) to [CPU No.] in the device setting dialog in GT Designer3.

Set the start device number of the GD devices to be used in [CPU No. switching GD device first No. (3 points)].

Specify [CPU No.] with the three consecutive GD devices, starting the set device number.

When [500] is set to [CPU No. switching GD device first No. (3 points)], GD500 to GD502 are used to specify [CPU No.] as shown in the following table.

CPU No.	GD device	Setting range
100	GD500	1 to 4 Setting an invalid value causes a communication timeout error. Specifying a nonexistent CPU No. or a CPU No. not supporting a multiple CPU system with a device causes a controller error.
101	GD501	
102	GD502	

■Specifying a CPU number with a device on the initially-displayed screen

Set [CPU No. switching GD device first No. (3 points)] so that the values of the GD devices are retained and monitored upon the GOT startup.

■Specifying a CPU number with a device in a multi-channel connection

If the setting range of [CPU No. switching GD device first No. (3 points)] set in each channel overlaps, the monitoring target CPU No. set to each channel is switched simultaneously.

Set [CPU No. switching GD device first No. (3 points)] in each channel so that the setting range does not overlap.

■Specifying a CPU number and a station number with devices in a multi-channel connection

When GD10 to GD25 are used to specify the station No. of an inverter or non-Mitsubishi temperature controller connected, setting [10] to [CPU No. switching GD device first No. (3 points)] in a different channel switches the monitoring target CPU No. and station No. of an inverter or non-Mitsubishi temperature controller set to each channel simultaneously.

Set [CPU No. switching GD device first No. (3 points)] so that the setting range does not overlap the station No. of an inverter or non-Mitsubishi temperature controller.

Start device number of the GD devices for module number switching

■Specifying a module number with a device

In a connection via a simple motion module, [Unit No.] can be specified with the GOT internal registers (GD devices) by specifying a value (100 to 10F) to [Unit No.] in the device setting dialog in GT Designer3.
Set the start device number of the GD devices to be used in [Module No. switching GD device first No. (16 points)].
Specify [Unit No.] with the 16 consecutive GD devices, starting the set device number.
When [550] is set to [Module No. switching GD device first No. (16 points)], GD550 to GD565 are used to specify [Unit No.] as shown in the following table.

Unit No.	GD device	Setting range
100	GD550	The setting range depends on [Unit Type]. • When [MELSEC iQ-R, RnMT/NC/RT, CR800-D], [MELSEC iQ-R, RnMT/RT, CR800-D], [MELSEC-Q/QS, Q17nD/M/NC/DR/DSR, CRnD-700], [MELSEC-Q, Q17nD/M/DR/DSR, CRnD-700], [MELSEC-L] or [MELIPC] is selected for [Unit Type] 00 to FF • When [MELSEC iQ-F] is selected for [Unit Type] 01 to 10 Setting an invalid value causes a device range error.
101	GD551	
102	GD552	
103	GD553	
104	GD554	
105	GD555	
106	GD556	
107	GD557	
108	GD558	
109	GD559	
10A	GD560	
10B	GD561	
10C	GD562	
10D	GD563	
10E	GD564	
10F	GD565	

■Specifying a module number with a device on the initially-displayed screen

Set [Module No. switching GD device first No. (16 points)] so that the values of the GD devices are retained and monitored upon the GOT startup.

■Specifying a module number with a device in a multi-channel connection

If the setting range of [Module No. switching GD device first No. (16 points)] set in each channel overlaps, the module No. of the simple motion module via the servo amplifier device of each channel is switched simultaneously.
Set [Module No. switching GD device first No. (16 points)] for each channel so that the setting range does not overlap.

■Specifying a station number and a module number with devices in a multi-channel connection

When GD10 to GD25 are used to specify the station No. of an inverter or non-Mitsubishi temperature controller connected, setting [10] to [Module No. switching GD device first No. (16 points)] switches the module No. of the simple motion module via the servo amplifier device and the station No. of an inverter or non-Mitsubishi temperature controller set to each channel simultaneously.
Set [Module No. switching GD device first No. (16 points)] so that the setting range does not overlap the station No. of an inverter or non-Mitsubishi temperature controller.

Servo axis switching GD device first No.

■Indirect specification of the servo axis No.

In a connection via a Motion CPU or Simple Motion module, a servo axis No. can be indirectly specified with GOT internal registers (GD devices) by specifying a value (100 to 115) to the axis No. of the servo amplifier device.
Set the start device number of the GD devices to be used in [Servo axis switching GD device first No. (16 points)].
Specify a servo axis number with 16 consecutive GD devices, starting the set device number.
When [10] is set to [Servo axis switching GD device first No. (16 points)], GD10 to GD25 are used to specify a servo axis number as shown in the following table.

Servo axis No.	GD device	Setting range
100	GD10	1 to 64 Setting an invalid value causes a device range error.
101	GD11	
102	GD12	
103	GD13	
104	GD14	
105	GD15	
106	GD16	
107	GD17	
108	GD18	
109	GD19	
110	GD20	
111	GD21	
112	GD22	
113	GD23	
114	GD24	
115	GD25	

■Specifying a servo axis number with a device on the initially-displayed screen

Set [Servo axis switching GD device first No. (16 points)] so that the values of the GD devices are retained and monitored upon the GOT startup.

■Specifying a servo axis number with a device in a multi-channel connection

If the setting rage of [Servo axis switching GD device first No. (16 points)] set in each channel overlaps, the axis No. of the servo amplifier of each channel is switched simultaneously.
Set [Servo axis switching GD device first No. (16 points)] for each channel so that the setting range does not overlap.

■Specifying a station number and a servo axis number with devices in a multi-channel connection

When GD10 to GD25 are used to specify the station No. of an inverter or non-Mitsubishi temperature controller connected, setting [10] to [Servo axis switching GD device first No. (16 points)] switches the axis No. of the servo amplifier and the station No. of an inverter or non-Mitsubishi temperature controller set to each channel simultaneously.
Set [Servo axis switching GD device first No. (16 points)] so that the setting range does not overlap the station No. of an inverter or non-Mitsubishi temperature controller.

Point

Cutting the portion of multiple connection of the controller

By setting GOT internal device, GOT can cut the portion of multiple connection of the controller. For example, faulty station that has communication timeout can be cut from the system.

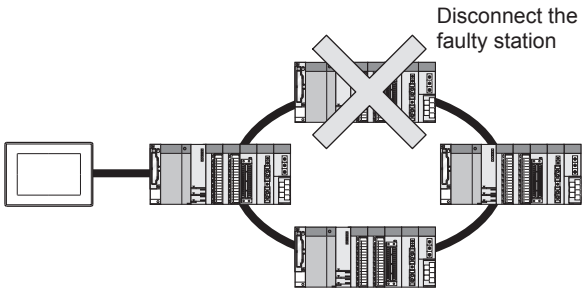

For details of the setting contents of GOT internal device, refer to the following manual.

GT Designer3 (GOT2000) Screen Design Manual

13.5 PLC Side Settings

Model		Reference
Peripheral connection module	AJ65BT-G4-S3	☞ Page 802 Connection AJ65BT-G4-S3
	AJ65BT-R2N	☞ Page 804 Connection AJ65BT-R2N

Connection AJ65BT-G4-S3

This section describes the settings of the GOT and peripheral connection module in the following case of the system configuration.

Point

- Peripheral connection module

For details of the peripheral connection module, refer to the following manual.

📖Peripheral Connection Module Type AJ65BT-G4-S3 User's Manual (detail volume)

- CC-Link module

For details of the CC-Link module, refer to the following manual.

📖CC-Link System Master/Local Module User's Manual QJ61BT11N

📖MELSEC-L CC-Link System Master/Local Module User's Manual

- CC-Link function built-in CPU

For details on the CC-Link function built-in CPU, refer to the following manual.

📖MELSEC-L CC-Link System Master/Local Module User's Manual

System configuration

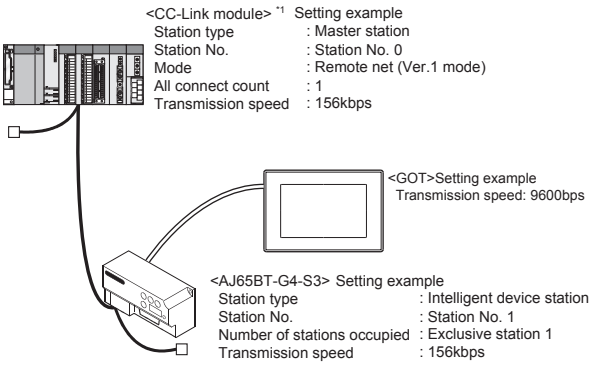

*1 The Start I/O No. of the CC-Link module is set to "0"

Switch setting of peripheral connection module

Set the station number setting switch, data link transmission speed setting switch, and operation setting DIP switch.

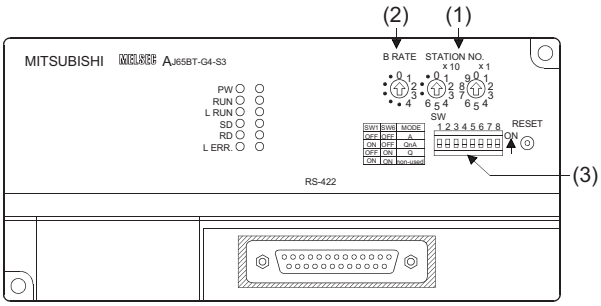

■Station number setting switch

Station number setting switch	Description	Set value	Setting necessity at GOT connection
STATION NO. ×10 ×1 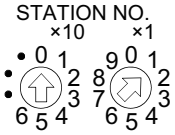	AJ65BT-G4-S3 station number setting	1 to 64	○

○: Necessary △: As necessary ×: Not necessary

■Data link transmission speed setting switch

Data link transmission speed setting switch	Description	Set value	Setting necessity at GOT connection
B RATE 	Data link transmission speed setting	0: 156kbps 1: 625kbps 2: 2.5Mbps 3: 5Mbps 4: 10Mbps	○

○: Necessary △: As necessary ×: Not necessary

■Operation setting DIP switch

Operation setting DIP switch	Setting Switch	Description	Set value	Setting necessity at GOT connection
SW 1 2 3 4 5 6 7 8 	SW1, SW6	Operation mode	SW1 = OFF SW6 = ON (fixed) (Q mode)	○
	SW2	Peripheral transmission speed*1	OFF (fixed)	×
	SW3			
	SW4	Not used	OFF (fixed)	×
	SW5			
	SW7			
	SW8	Test mode	OFF (fixed) (Online mode)	○

○: Necessary △: As necessary ×: Not necessary

*1 The peripheral connection module operates with the baud rate set in the GOT.
☞ Page 811 [Controller Setting] in GT Designer3

Point

Operation mode of peripheral connection module

Be sure to set the "Q mode" as an operation mode of the peripheral connection module.

Connection AJ65BT-R2N

This section describes the settings of the GOT and peripheral connection module in the following case of the system configuration.

Point

- Peripheral connection module

For details of the peripheral connection module, refer to the following manual.

Peripheral Connection Module Type AJ65BT-R2N User's Manual

- CC-Link module

For details of the CC-Link module, refer to the following manual.

CC-Link System Master/Local Module User's Manual QJ61BT11N

- CC-Link built-in CPU

For details on the CC-Link function built-in CPU, refer to the following manual.

MELSEC-L CC-Link System Master/Local Module User's Manual

System configuration

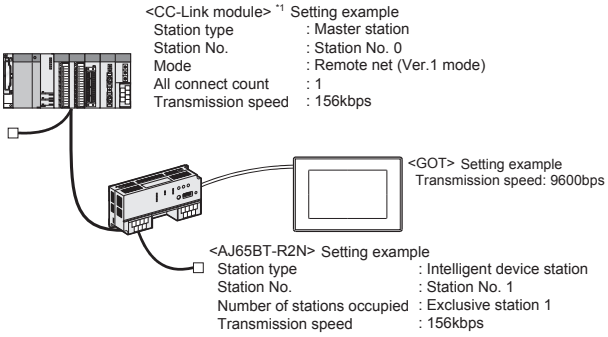

*1 The Start I/O No. of the CC-Link module is set to "0"

Switch setting of peripheral connection module

Set the station number setting switch, data link transmission speed setting switch, and operation setting DIP switch.

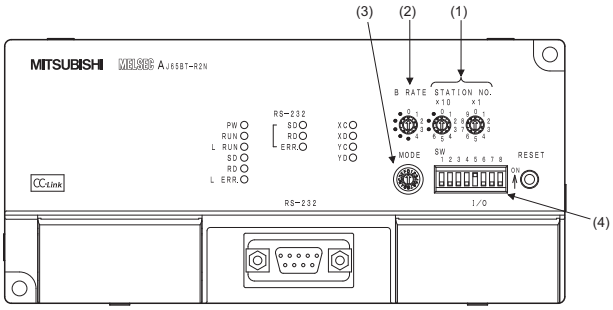

■Station number setting switch

Station number setting switch	Description	Set value	Setting necessity at GOT connection
STATION NO. x10 x1	AJ65BT-R2N station number setting	1 to 64	○

○: Necessary △: As necessary ×: Not necessary

■Data link transmission speed setting switch

Data link transmission speed setting switch	Description	Set value	Setting necessity at GOT connection
B RATE	Data link transmission speed setting	0: 156kbps 1: 625kbps 2: 2.5Mbps 3: 5Mbps 4: 10Mbps	○

○: Necessary △: As necessary ×: Not necessary

■Mode setting switch

Mode setting switch	Description	Set value	Setting necessity at GOT connection
MODE	Mode setting	5 (fixed) (MELSOFT/connection mode)	○

○: Necessary △: As necessary ×: Not necessary

■RS-232 transmission setting switch

RS-232 transmission setting switch	Setting switch	Description	Set value	Setting necessity at GOT connection
SW 1 2 3 4 5 6 7 8	SW1	Peripheral transmission speed*1	OFF (fixed)	○
	SW2			
	SW3			
	SW4			
	SW5	Data bit length	OFF (fixed)	○
	SW6	Parity bit length	OFF (fixed)	○
	SW7			
	SW8	Stop bit length	OFF (fixed)	○

○: Necessary △: As necessary ×: Not necessary

*1 The peripheral connection module operates with the baud rate set in the GOT.
☞ Page 811 [Controller Setting] in GT Designer3

Point

Precautions when setting peripheral connection module

- mode setting switch

Be sure to set the Operation mode setting switch to "5" (MELSOFT/connection mode).

- RS-232 transmission setting switch

Turn OFF SW1 through SW8 of the RS-232 transmission setting switch.
If any switch of SW1 through SW8 is ON, setting error will occur (RUN LED turns off).

Switch setting of CC-Link module (Q series)

Set the station number setting switch, transmission speed / mode setting switch.

QJ61BT11, QJ61BT11N

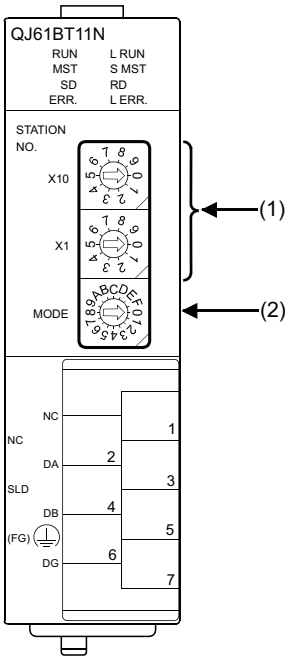

Station number setting switch

Station number setting switch	Description	Set value	Setting necessity at GOT connection
STATION NO. X10 X1	Station number setting (master station)	0 (fixed)	○

○: Necessary △: As necessary ×: Not necessary

Transmission rate/mode setting switch

Transmission rate/mode setting switch	Description	Set value	Setting necessity at GOT connection
MODE	Transmission rate/mode setting	0: 156kbps 1: 625kbps 2: 2.5Mbps 3: 5Mbps 4: 10Mbps	○

○: Necessary △: As necessary ×: Not necessary

Point

When the switch setting has been changed
Turn the PLC CPU OFF then ON again, or reset the PLC CPU.

[Network parameter] of GX Developer

Network parameter

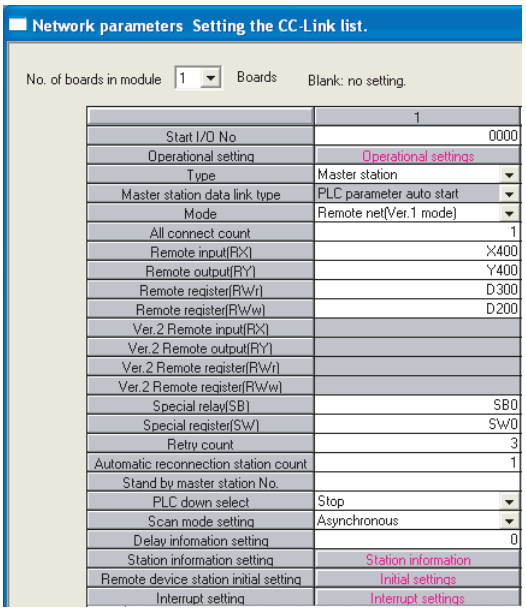

Item	Set value	Setting necessity at GOT connection
No. of boards in module	1	○
Start I/O No.	0000H	○
Operation setting	(Use default value)	△
Type	Master station (fixed)	○
Mode	Remote net (Ver.1 mode)	○
All connect count	1	○
Remote input (RX)	X400	△
Remote output (RY)	Y400	△
Remote register (RWr)	D300	△
Remote register (RWw)	D200	△
Special relay (SB)	SB0	△
Special register (SW)	SW0	△
Retry count	(Use default value)	△
Automatic reconnection station count		△
Stand by master station No.		×
PLC down select		△
Scan mode setting		△
Delay information setting		△
Station information setting	☞ Page 808 Station information setting	○
Remote device station initial setting	(Use default value)	×
Interrupt setting		×

○: Necessary △: As necessary ×: Not necessary

Station information setting

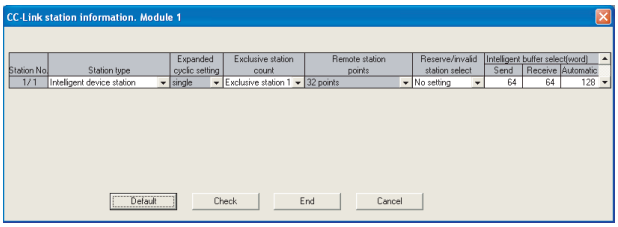

Item*1	Set value	Setting necessity at GOT connection
Station type*2	Intelligent device station (fixed)	○
Number of stations occupied	Exclusive station 1 (fixed)	○
Reserve/invalid station select	No setting	○
Intelligent buffer select (word)	(Use default value)	×

○: Necessary △: As necessary ×: Not necessary

*1 When the [Mode] of the CC-Link module is set at [Remote net - (Ver. 2 mode)], [Remote station points] can be set.
[Remote station points] is a setting for the remote I/O station.
The default value (32 points) must be used on the GOT.

*2 When the [Mode] of the CC-Link module is set at [Remote net - (Ver. 2 mode)] or [Remote net - Additional mode], set to [Ver. 1 Intelligent device station].

Point

When changing the network parameter

After writing the network parameter to the PLC CPU, operate the PLC CPU ether turning OFF and then ON or resetting.

Completion confirmation

After initial communications of CC-Link are completed, the L RUN LED of AJ65BT-G4-S3 turns on.

The GOT starts to monitor after the L-RUN LED of AJ65BT-G4-S3 turns on.

It does not monitor while the L RUN LED turns off.

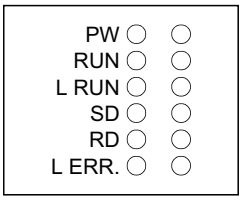

Parameter setting (when connecting to C Controller module (Q Series))

Use SW3PVC-CCPU-E Ver.3.05F or later for the C Controller module setting utility.

Connection settings

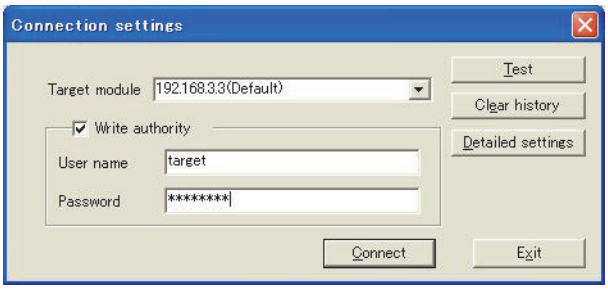

Item	Set value	Setting necessity at GOT connection
Target module*1	192.168.3.3	○
Write authority	Mark the checkbox	○
User name*2	target	○
Password*2	password	○
Detailed settings	-	△

○: Necessary △: As necessary ×: Not necessary

*1 If the IP address of the C Controller module (Q Series) has been changed, input the changed IP address or host name.

*2 If the account of the C Controller module (Q Series) has been changed, input the changed user name and password.

[Parameter Setting] of CC-Link utility

■Network parameter

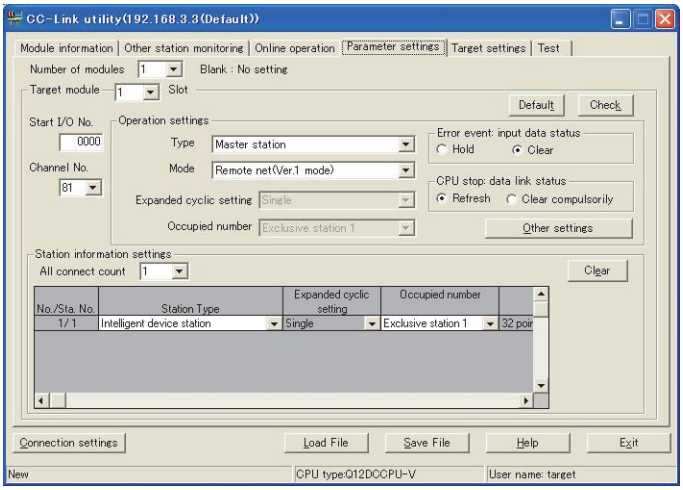

Item		Set value	Setting necessity at GOT connection
Number of modules		1	○
Target module		1	○
Start I/O No.		0000H	○
Channel No.		(Use default value)	○
Operation setting	type	Master station(fixed)	○
	Mode*1	Remote net (Ver.1 mode)	○
	Expanded cyclic station	Single(fixed)	△
	Occupied number	Exclusive station 1 (fixed)	△
	Error event : input data status	Clear	△
	CPU stop: data link status	Refresh	△
	Other settings	(Use default value)	△
Station information settings	All connect count	1	○
	Station type	Ver.1 Intelligent device station(fixed)	○
	Expanded cyclic station	Single	△
	Occupied number*2	Exclusive station 1	×
	Remote station points	32 points	○
	Reserve/invalid station select	No setting	○
	Intelligent buffer select (word)	(Use default value)	×

○: Necessary △: As necessary ×: Not necessary

*1 If the CC-Link module [Mode] is [Remote net -Ver.1 mode], [Remote station points] cannot be set.

*2 Set the same setting as that of the GOT.

Point

When changing the network parameter

After writing the network parameter to the C Controller module (Q Series), either turn the C Controller module (Q Series) OFF and then ON or reset it.

[Controller Setting] in GT Designer3

Item	Set value
Transmission Speed	9600bps 19200bps 38400bps 57600bps 115200bps
Retry Count	0 to 5times
Timeout Time	3 to 30sec
Delay Time	0 to 300ms

Point

[Controller Setting] of GT Designer3

For [Controller Setting], of GT Designer3, refer to the following.

☞ Page 796 Setting communication interface (Controller Setting)

13.6 Precautions

Connection in the multiple CPU system

When the GOT is connected to multiple CPU system, the following time is taken until when the PLC runs.
QCPU (Q mode), Motion CPU (Q series): 10 seconds or more
MELDAS C70: 18 seconds or more
When the GOT starts before the PLC runs, a system alarm occurs. Adjust the opening screen time in the GOT setup so that no system alarm occurs.
📖GT Designer3 (GOT2000) Screen Design Manual

Connection to LCPU

LCPU may diagnose (check file system, execute recovering process, etc.) the SD memory card when turning on the power or when resetting. Therefore, it takes time until the SD memory card becomes available. When the GOT starts before the SD card becomes available, a system alarm occurs. Adjust the opening screen time in the GOT setup so that no system alarm occurs.
📖GT Designer3 (GOT2000) Screen Design Manual

Connection to Q17nDCPU, Q170MCPU, Q170MSCPU(-S1), CNC C70, CRnQ-700, or CR800-Q (Q172DSRCPU)

The Q17nDCPU, Q170MCPU, Q170MSCPU(-S1), CNC C70, CRnQ-700, and CR800-Q (Q172DSRCPU) are applicable to CC-Link Ver.2 only.
For connecting to the CC-Link (Via G4) network system, set the CC-Link (G4) network system to the CC-Link Ver.2 mode.

Connection to Q170MCPU or Q170MSCPU(-S1)

Set [CPU No.] to 2 in the device setting to monitor the device of the Motion CPU area (CPU No. 2).
When [CPU No.] is set to 0 or 1, the device on the PLC CPU area (CPU No. 1) is monitored.
When [CPU No.] is set to the number other than 0 to 2, a communication error occurs and the monitoring cannot be executed.
For the setting of [CPU No.], refer to the following.
📖GT Designer3 (GOT2000) Screen Design Manual

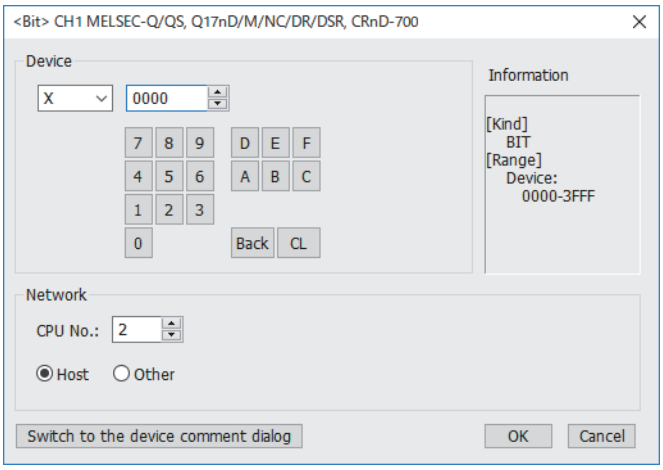

PART 3 MITSUBISHI ELECTRIC FA DEVICE CONNECTIONS

14 MELIPC CONNECTION

15 INVERTER CONNECTION

16 SERVO AMPLIFIER CONNECTION

17 ROBOT CONTROLLER CONNECTION

18 CNC CONNECTION

19 LASER DISPLACEMENT SENSOR MH11 CONNECTION

14 MELIPC CONNECTION

- Page 814 Connectable Model List
- Page 814 Ethernet Connection
- Page 829 CC-Link IE Field Network Connection
- Page 837 Settable Device Range

14.1 Connectable Model List

The following table shows the connectable models.

Series	Model name	Clock	Communication type	Connectable model	Refer to
MELIPC	MI5122-VW	○	Ethernet	GT27 GT25 GT23 GT21 07W GT21 04R GT21 03P 04P ET/R4 GS25 GS21	☞ Page 814 Connection to MELIPC(MI5122-VW)
		○	CC-Link IE Field Network	GT27 GT25	☞ Page 829 Connection to MELIPC(MI5122-VW)

14.2 Ethernet Connection

Connection to MELIPC(MI5122-VW)

Direct connection

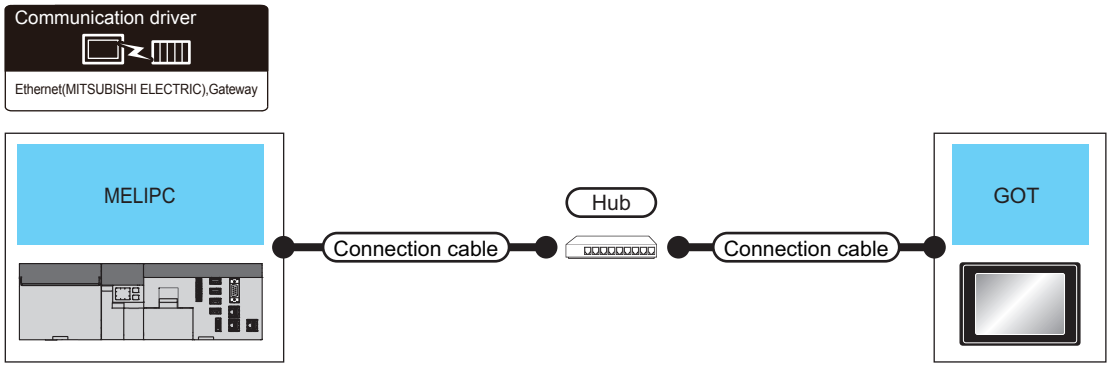

MELIPC		Connection cable*1	Max. distance*2	GOT		Number of connectable equipment
Model name	Communication type			Option device*5	Model	
MI5122-VW*3*4 (Built-in Ethernet port: CH1)	Ethernet	• 100BASE-TX Shielded twisted pair cable (STP) or unshielded twisted pair cable (UTP) of category 5 or higher • 10BASE-T Shielded twisted pair cable (STP) or unshielded twisted pair cable (UTP) of category 3 or higher	100m	- (Built into GOT)	GT27 GT25 GT23 GT21 07W GT21 04R GT21 03P 04P ET/R4 GS25 GS21	16 GOTs
				GT25-J71E71-100	GT27 GT25	

*1 Only available for MELSEC-Q (A mode), MELSEC-A (AnSCPU), and Motion CPU (A series) small type.
Connect the GOT to the Ethernet module, hub, or other system equipment according to the Ethernet network system used.
Use cables, connectors, and hubs that meet the IEEE802.3 10BASE-T/100BASE-TX standard.
When only one GOT is connected, the GOT can be directly connected to the controller without a hub.

*2 Length between a hub and a node
The maximum length depends on the Ethernet equipment used.
The following shows the number of the connectable nodes when a repeater hub is used.
• 10BASE-T: Up to 4 nodes for a cascade connection (500 m)
• 100BASE-TX: UP to 2 nodes for a cascade connection (205 m)
When switching hubs are used, the cascade connection between the switching hubs has no logical limit for the number of cascades.
For the limit, contact the switching hub manufacturer.

*3 For the system configuration of MELIPC, refer to the following manual.
Manuals of MELIPC

*4 Select [MELIPC] for [Unit Type] in [Connected Ethernet Controller Setting] of GT Designer3.
For [Connected Ethernet Controller Setting] of GT Designer3, refer to the following.
☞ Page 821 GOT Ethernet Setting

*5 GT25-W and GT2505-V do not support option devices.

Connection through a servo amplifier

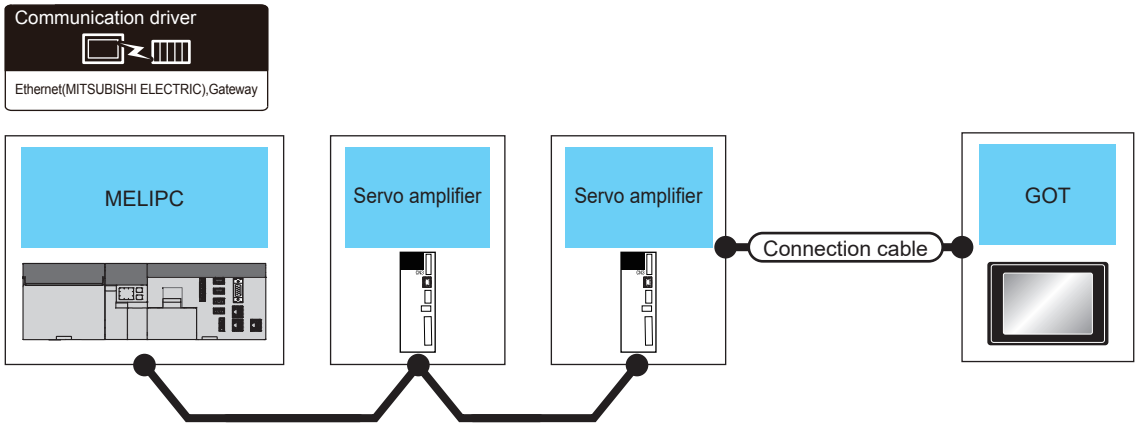

CC-Link IE Field Network Basic

MELIPC*1		Servo amplifier		Connection cable	Maximum segment length*2	GOT*3		Number of connectable equipment
Model name	Communication type	Model name	Communication type			Option device*4	Model	
MI5122-VW	CC-Link IE Field Network Basic	MR-J5-□G MR-J5-□G-RJ MR-J5D1-□G4 MR-JET-G	Ethernet	• 100BASE-TX Shielded twisted pair cable (STP) or unshielded twisted pair cable (UTP) of category 5 or higher	100m	- (Built into GOT)	GT27 GT25 GT23 GT21 GT21 GT21 GS25 GS21	1 GOT for 1 servo amplifier
						GT25-J71E71-100	GT27 GT25	

*1 For the system configuration of MELIPC, refer to the following manual.
Manuals of MELIPC

*2 The length between the hub and node.
The maximum length depends on the Ethernet module used.
The following shows the number of the connectable pieces of equipment when a repeater hub is used.
• 100BASE-TX: Up to 2 pieces using cascade connection (205 m)
For the cascade connection between the switching hubs, there is no theoretical limit to the number of cascades.
For whether there is a limit, contact the switching hub manufacturer.

*3 For the settings in GOT, refer to the following.
☞ Page 816 GOT side settings

*4 GT25-W and GT2505-V do not support option devices.

GOT side settings

Setting communication interface (Controller Setting)

Set the channel of the connected equipment.

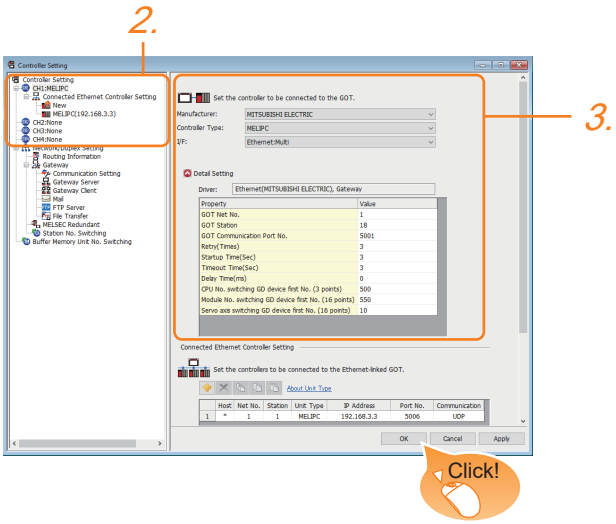

1. Select [Common] → [Controller Setting] from the menu.

2. In the [Controller Setting] window, select the channel No. to be used from the list menu.

3. Set the following items.

- [Manufacturer]: [MITSUBISHI ELECTRIC]
- [Controller Type]: [MELIPC]
- [I/F]: [Ethernet:Multi]
- [Detail Setting]: Configure the settings according to the usage environment.

☞ Page 817 Communication detail settings

4. When you have completed the settings, click the [OK] button.

Point

The settings of connecting equipment can be confirmed in [I/F Communication Setting].
For details, refer to the following.
☞ Page 54 I/F communication setting

Communication detail settings

Make the settings according to the usage environment.

Property	Value
GOT Net No.	1
GOT Station	18
GOT Communication Port No.	5001
Retry(Times)	3
Startup Time(Sec)	3
Timeout Time(Sec)	3
Delay Time(ms)	0
CPU No. switching GD device first No. (3 points)	500
Module No. switching GD device first No. (16 points)	550
Servo axis switching GD device first No. (16 points)	10

Item	Description	Range
GOT Net No.	Set the network No. of the GOT. (Default: 1)	1 to 239
GOT Station*1	Set the station No. of the GOT. (Default: 18)	1 to 120
GOT Communication Port No.	Set the GOT port No. for the connection with the Ethernet module. (Default: 5001*2)	1024 to 5010 and 5014 to 65534 (Except for 5011 to 5013 and 49153 to 49170)
Retry	Set the number of retries to be performed when a communication timeout occurs. When receiving no response after retries, the communication times out. (Default: 3times)	0 to 5 times
Startup Time	Specify the time period from the GOT startup until GOT starts the communication with the MELIPC. (Default: 3sec)	3 to 255 sec
Timeout Time	Set the time period for a communication to time out. (Default: 3sec)	1 to 90 sec
Delay Time	Set the delay time for reducing the load of the network/destination MELIPC. (Default: 0ms)	0 to 10000 (ms)
CPU No. switching GD device first No. (3 points)	Set the start device number of the GD devices for CPU No. switching. (Default: 500) For the details, refer to the following. ☞ Page 818 Start device number of the GD devices for CPU number switching	<For GT27, GT25, GT23, GS25> 0 to 65520 <For GT21, GS21> 0 to 2032
Module No. switching GD device first No. (16 points)	Set the start device number of the GD devices for module No. switching. (Default: 550) For the details, refer to the following. ☞ Page 819 Start device number of the GD devices for module number switching	<For GT27, GT25, GT23, GS25> 0 to 65520 <For GT21, GS21> 0 to 2032
Servo axis switching GD device first No. (16 points)	Set the servo axis switching GD device first No. (Default: 10) For the details, refer to the following. ☞ Page 820 Servo axis switching GD device first No.	<For GT27, GT25, GT23, GS25> 0 to 65520 <For GT21, GS21> 0 to 2032

*1 Set different values for [GOT Station] of [Detail Setting] and [Station] of [Connected Ethernet Controller Setting].
☞ Page 822 Connected Ethernet Controller Setting

*2 When assigning the same driver to the multiple channels, in the communication drivers set as the second and following, the default value of [GOT Communication Port No.] becomes the earliest number in the vacant numbers of No. 6000 and later.

Point

Examples of [Controller Setting]

For examples of [Controller Setting], refer to the following.

☞ Page 823 MELIPC Side Settings

■Start device number of the GD devices for CPU number switching

• Specifying a CPU number with a device

[CPU No.] can be specified with the GOT internal registers (GD devices) by specifying a value (100 to 102) to [CPU No.] in the device setting dialog in GT Designer3.

Set the start device number of the GD devices to be used in [CPU No. switching GD device first No. (3 points)].

Specify [CPU No.] with the three consecutive GD devices, starting the set device number.

When [500] is set to [CPU No. switching GD device first No. (3 points)], GD500 to GD502 are used to specify [CPU No.] as shown in the following table.

CPU No.	GD device	Setting range
100	GD500	1 to 4 Setting an invalid value causes a communication timeout error. Specifying a nonexistent CPU No. or a CPU No. not supporting a multiple CPU system with a device causes a controller error.
101	GD501	
102	GD502	

• Specifying a CPU number with a device on the initially-displayed screen

Set [CPU No. switching GD device first No. (3 points)] so that the values of the GD devices are retained and monitored upon the GOT startup.

• Specifying a CPU number with a device in a multi-channel connection

If the setting range of [CPU No. switching GD device first No. (3 points)] set in each channel overlaps, the monitoring target CPU No. set to each channel is switched simultaneously.

Set [CPU No. switching GD device first No. (3 points)] in each channel so that the setting range does not overlap.

• Specifying a CPU number and a station number with devices in a multi-channel connection

When GD10 to GD25 are used to specify the station No. of an inverter or non-Mitsubishi temperature controller connected, setting [10] to [CPU No. switching GD device first No. (3 points)] in a different channel switches the monitoring target CPU No. and station No. of an inverter or non-Mitsubishi temperature controller set to each channel simultaneously.

Set [CPU No. switching GD device first No. (3 points)] so that the setting range does not overlap the station No. of an inverter or non-Mitsubishi temperature controller.

■Start device number of the GD devices for module number switching

• Specifying a module number with a device

In a connection via a simple motion module, [Unit No.] can be specified with the GOT internal registers (GD devices) by specifying a value (100 to 10F) to [Unit No.] in the device setting dialog in GT Designer3.

Set the start device number of the GD devices to be used in [Module No. switching GD device first No. (16 points)].

Specify [Unit No.] with the 16 consecutive GD devices, starting the set device number.

When [550] is set to [Module No. switching GD device first No. (16 points)], GD550 to GD565 are used to specify [Unit No.] as shown in the following table.

Unit No.	GD device	Setting range
100	GD550	The setting range depends on [Unit Type]. • When [MELSEC iQ-R, RnMT/NC/RT, CR800-D], [MELSEC iQ-R, RnMT/RT, CR800-D], [MELSEC-Q/QS, Q17nD/M/NC/DR/DSR, CRnD-700], [MELSEC-Q, Q17nD/M/DR/DSR, CRnD-700], [MELSEC-L] or [MELIPC] is selected for [Unit Type] 00 to FF • When [MELSEC iQ-F] is selected for [Unit Type] 01 to 10 Setting an invalid value causes a device range error.
101	GD551	
102	GD552	
103	GD553	
104	GD554	
105	GD555	
106	GD556	
107	GD557	
108	GD558	
109	GD559	
10A	GD560	
10B	GD561	
10C	GD562	
10D	GD563	
10E	GD564	
10F	GD565	

• Specifying a module number with a device on the initially-displayed screen

Set [Module No. switching GD device first No. (16 points)] so that the values of the GD devices are retained and monitored upon the GOT startup.

• Specifying a module number with a device in a multi-channel connection

If the setting range of [Module No. switching GD device first No. (16 points)] set in each channel overlaps, the module No. of the simple motion module via the servo amplifier device of each channel is switched simultaneously.

Set [Module No. switching GD device first No. (16 points)] for each channel so that the setting range does not overlap.

• Specifying a station number and a module number with devices in a multi-channel connection

When GD10 to GD25 are used to specify the station No. of an inverter or non-Mitsubishi temperature controller connected, setting [10] to [Module No. switching GD device first No. (16 points)] switches the module No. of the simple motion module via the servo amplifier device and the station No. of an inverter or non-Mitsubishi temperature controller set to each channel simultaneously.

Set [Module No. switching GD device first No. (16 points)] so that the setting range does not overlap the station No. of an inverter or non-Mitsubishi temperature controller.

■Servo axis switching GD device first No.

• Indirect specification of the servo axis No.

In a connection via a Motion CPU or Simple Motion module, a servo axis No. can be indirectly specified with GOT internal registers (GD devices) by specifying a value (100 to 115) to the axis No. of the servo amplifier device.

Set the start device number of the GD devices to be used in [Servo axis switching GD device first No. (16 points)].

Specify a servo axis number with 16 consecutive GD devices, starting the set device number.

When [10] is set to [Servo axis switching GD device first No. (16 points)], GD10 to GD25 are used to specify a servo axis number as shown in the following table.

Servo axis No.	GD device	Setting range
100	GD10	1 to 64 Setting an invalid value causes a device range error.
101	GD11	
102	GD12	
103	GD13	
104	GD14	
105	GD15	
106	GD16	
107	GD17	
108	GD18	
109	GD19	
110	GD20	
111	GD21	
112	GD22	
113	GD23	
114	GD24	
115	GD25	

• Specifying a servo axis number with a device on the initially-displayed screen

Set [Servo axis switching GD device first No. (16 points)] so that the values of the GD devices are retained and monitored upon the GOT startup.

• Specifying a servo axis number with a device in a multi-channel connection

If the setting rage of [Servo axis switching GD device first No. (16 points)] set in each channel overlaps, the axis No. of the servo amplifier of each channel is switched simultaneously.

Set [Servo axis switching GD device first No. (16 points)] for each channel so that the setting range does not overlap.

• Specifying a station number and a servo axis number with devices in a multi-channel connection

When GD10 to GD25 are used to specify the station No. of an inverter or non-Mitsubishi temperature controller connected, setting [10] to [Servo axis switching GD device first No. (16 points)] switches the axis No. of the servo amplifier and the station No. of an inverter or non-Mitsubishi temperature controller set to each channel simultaneously.

Set [Servo axis switching GD device first No. (16 points)] so that the setting range does not overlap the station No. of an inverter or non-Mitsubishi temperature controller.

GOT Ethernet Setting

The GOT can be connected to a different network by configuring the following setting.

■GOT IP address setting

Set the following communication port setting.

- Standard port (When using GT25-W or GS25: Port 1)
- Extended port (When using GT25-W or GS25: Port 2)

■GOT Ethernet common setting

Set the following setting which is common to the standard port and the extension port, or port 1 and port 2.

- [Default Gateway]
- [Peripheral S/W Communication Port No.]
- [Transparent Port No.]

■IP filter setting

By configuring the IP filter setting, the access from the specific IP address can be permitted or shut off.

For the detailed settings, refer to the following manual.

☞ Page 50 GOT Ethernet Setting

Connected Ethernet Controller Setting

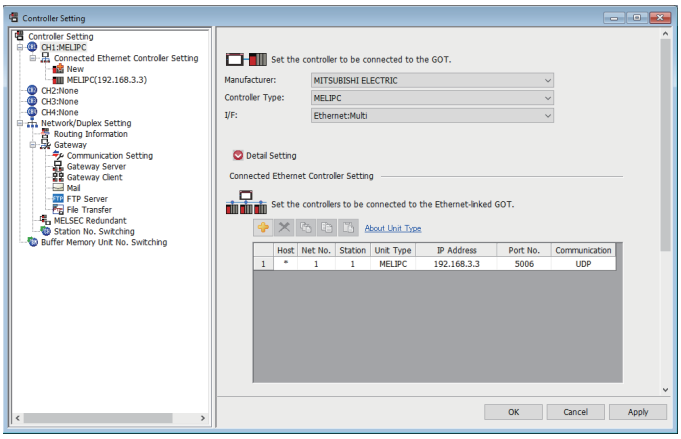

Item	Description	Range
Host	The host is displayed. It refers to a station that can be connected without setting a station number. (The host is indicated with an asterisk (*))	—
Net No.	N/W No. Set the network No. of the connected MELIPC built-in Ethernet port (CH1). (Default: 1)	1 to 239
Station*1	Set the station No. of the connected MELIPC built-in Ethernet port (CH1). (Default: 1)	1 to 120
Unit Type	Set the type of the connected MELIPC built-in Ethernet port (CH1).	MELIPC
IP address	Set the IP address of the connected MELIPC built-in Ethernet port (CH1). (Default: 192.168.3.3)	0.0.0.0 to 255.255.255.255
Port No.	Set the port No. of the connected MELIPC built-in Ethernet port (CH1). (Default: 5006)	5006, 5007
Communication	Connection Method differs depending on the port No. <Port No.: For 5006> UDP (fixed) <Port No.: For 5007> TCP (fixed)	UDP, TCP

*1 Set different values for [GOT Station] of [Detail Setting] and [Station] of [Connected Ethernet Controller Setting].
☞ Page 817 Communication detail settings

Point

• Examples of [Connected Ethernet Controller Setting]

For examples of [Connected Ethernet Controller Setting], refer to the following.

☞ Page 823 MELIPC Side Settings

• Communication interface setting by Utility

The communication interface setting can be changed on the Utility's [Communication Settings] after writing [Controller Setting] of project data.

For details on the Utility, refer to the following manual.

📖GOT2000 Series User's Manual (Utility)

• Precedence in communication settings

When settings are made by GT Designer3 or the Utility, the latest setting is effective.

MELIPC Side Settings

Model name	
MELIPC	MI5122-VW

Connecting to MELIPC(MI5122-VW) (multiple connection)

This section describes the settings of the GOT and MELIPC(MI5122-VW) in the following case of system configuration.
The settings of MELIPC side use the Peripheral Tool for Edge Computer MI Configurator.

Point

Peripheral Tool for Edge Computer MI Configurator
For details of Peripheral Tool for Edge Computer MI Configurator, refer to the following manual.
Manuals of MELIPC

■When the GOT's communication format is UDP

- System configuration

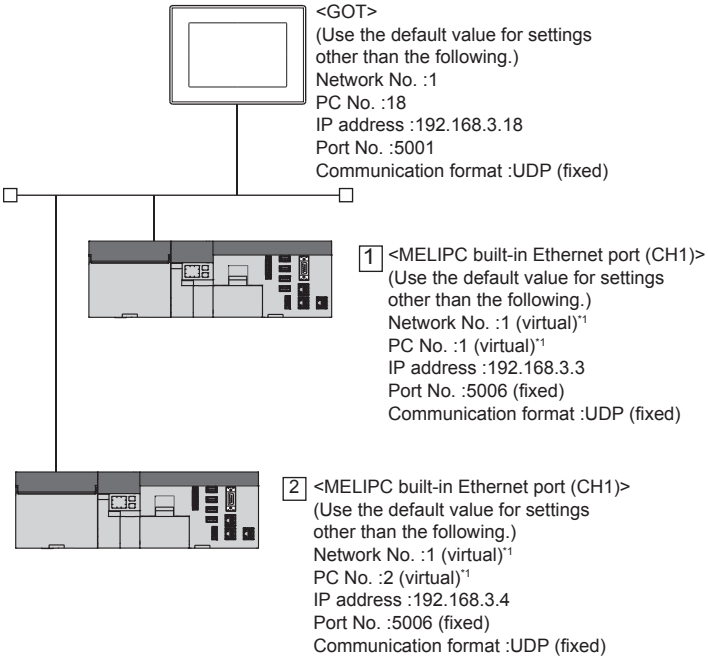

*1 These setting items do not exist at the MELIPC side. However, the virtual values must be set on the GOT side.
☞ • [Controller Setting] and [Connected Ethernet Controller Setting] of GT Designer3

• [Basic Parameter] of MI Configurator

1) External device interaction setting

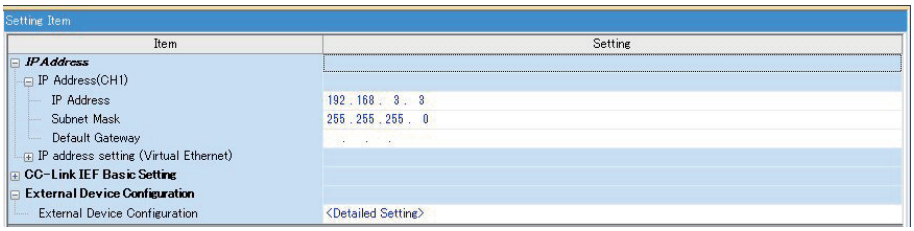

Item	Set value	Setting necessity at GOT connection
IP Address	192.168.3.3	×
Subnet Mask	-	×
Default Gateway	-	×
CC-Link IEF Basic Setting	(Use default value)	×
External Device Configuration	-	×

○: Necessary △: As necessary ×: Not necessary

• [Controller Setting] and [Connected Ethernet Controller Setting] of GT Designer3

For the setting method of [Controller Setting] and [Connected Ethernet Controller Setting] of GT Designer3, refer to the following.

☞ Page 816 Setting communication interface (Controller Setting)

Point

[Connected Ethernet Controller Setting] when connecting MELIPC built-in Ethernet port (CH1) and a GOT

The setting items for the network number and station number do not exist at the MELIPC side.

Set the network No. and station No. on the GOT side.

Set the network No. that does not exist on the network system and any station No.

1) Controller setting

Item	Set value
GOT Net No.	1
GOT Station	18
GOT Ethernet Setting	192.168.3.18
GOT Communication Port No.	5001
Retry	3 times
Startup Time	3 sec
Timeout Time	3 sec
Delay Time	0 ms

2) GOT Ethernet Setting

Item	Set value
GOT IP Address	192.168.3.18
Subnet Mask	255.255.255.0
Default Gateway	0.0.0.0
Peripheral Communication Port No.	5015
Transparent Port No.	5014

3) Connected Ethernet Controller Setting

Item		Set value	
		1	2
Ethernet setting No.1	Host	*	-
	Net No.	1*1	1*1
	Station	1*2	2*2
	Unit Type	MELIPC	MELIPC
	IP Address	192.168.3.3	192.168.3.4
	Port No.	5006	5006
	Communication	UDP	UDP

*1 Set the same value as GOT Net No.
*2 Set a value different from the GOT station number and PLC numbers of other MELIPCs on the same network.

- Checking communication state of MELIPC built-in Ethernet port (CH1)

1) When using the Windows Command Prompt

Execute a Ping command at the Command Prompt of Windows.

- At normal communication

C:\>Ping 192.168.3.3

Reply from 192.168.3.3:bytes=32 time<1ms TTL=32

- At abnormal communication

C:\>Ping 192.168.3.3

Request timed out.

2) At abnormal communication

At abnormal communication, check the following and execute the Ping command again.

- Cable connecting condition
- Confirmation of switch and network parameter setting
- Operation state of MELIPC (faulty or not)
- The IP address of MELIPC built-in Ethernet port (CH1) specified in the ping command

Point

Ethernet diagnostics of MI Configurator

Ethernet diagnostics of MI Configurator is available to a Ping test from the MELIPC.

For details of Ethernet diagnostics of MI Configurator, refer to the following manual.

Manuals of MELIPC

■When the GOT's communication format is TCP

- System configuration

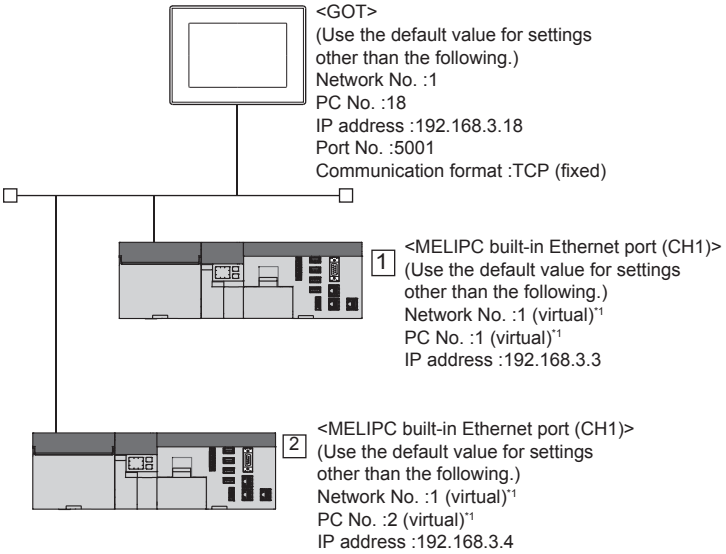

*1 These setting items do not exist at the MELIPC side. However, the virtual values must be set on the GOT side.
☞ •[Controller Setting] and [Connected Ethernet Controller Setting] of GT Designer3

- [Basic Parameter] of MI Configurator

1) External device interaction setting

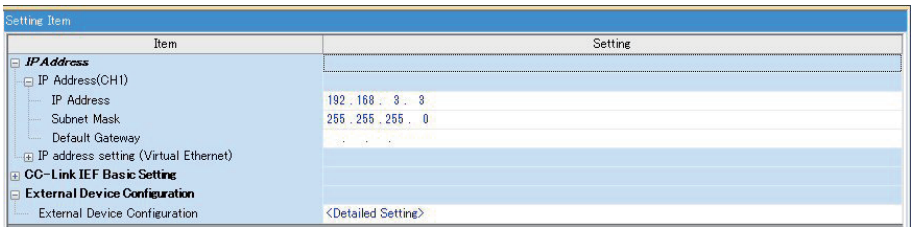

Item	Set value	Setting necessity at GOT connection
IP Address	192.168.3.3	×
Subnet Mask	-	×
Default Gateway	-	×
CC-Link IEF Basic Setting	(Use default value)	×
External Device Configuration	☞ 2) External Device Configuration	○

○: Necessary △: As necessary ×: Not necessary

2) External Device Configuration

The setting is required for all the connected GOTs.

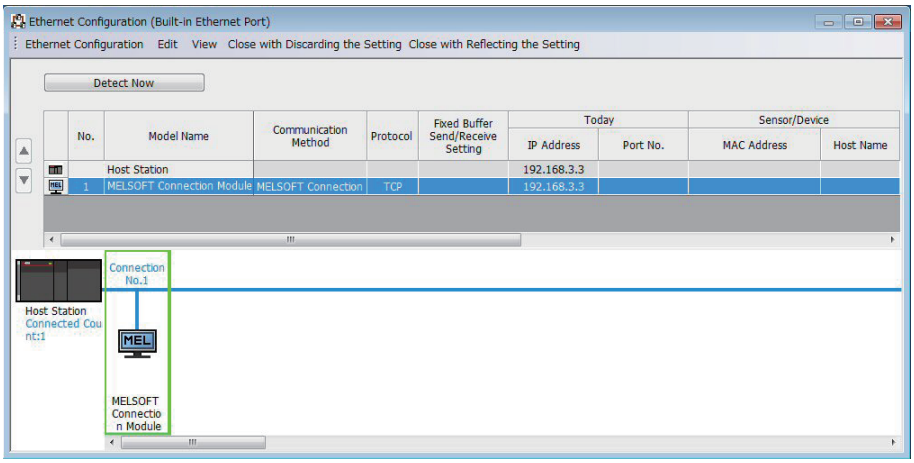

Item	Set value
Protocol	(Use default value)
Open system	MELSOFT connection

- [Controller Setting] and [Connected Ethernet Controller Setting] of GT Designer3

For the setting method of [Controller Setting] and [Connected Ethernet Controller Setting] of GT Designer3, refer to the following.

☞ Page 816 Setting communication interface (Controller Setting)

Point

[Connected Ethernet Controller Setting] when MELIPC built-in Ethernet port (CH1) is connected to a GOT

The setting items for the network No. and station No. do not exist at the MELIPC side.

Set the network No. and station No. on the GOT side.

Set the network No. that does not exist on the network system and any station No.

1) Controller setting

Item	Set value
GOT Net No.	1
GOT Station	18
GOT Ethernet Setting	192.168.3.18
GOT Communication Port No.	5001
Retry	3 times
Startup Time	3 sec
Timeout Time	3 sec
Delay Time	0 ms

2) GOT Ethernet Setting

Item	Set value
GOT IP Address	192.168.3.18
Subnet Mask	255.255.255.0
Default Gateway	0.0.0.0
Peripheral Communication Port No.	5015
Transparent Port No.	5014

3) Connected Ethernet Controller Setting

Item		Set value	
		1	2
Ethernet setting No.1	Host	*	-
	Net No.	1*1	1*1
	Station	1*2	2*2
	Unit Type	MELIPC	MELIPC
	IP Address	192.168.3.3	192.168.3.4
	Port No.	5007	5007
	Communication	TCP(fixed)	TCP(fixed)

*1 Set the same value as GOT Net No.
*2 Set a value different from the GOT station number.

- Checking communication state of MELIPC built-in Ethernet port (CH1)

1) When using the Windows Command Prompt

Execute a Ping command at the Command Prompt of Windows.

- At normal communication

C:\>Ping 192.168.3.3

Reply from 192.168.3.3:bytes=32 time<1ms TTL=32

- At abnormal communication

C:\>Ping 192.168.3.3

Request timed out.

2) At abnormal communication

At abnormal communication, check the following and execute the Ping command again.

- Cable connecting condition
- Confirmation of switch and network parameter setting
- Operation state of MELIPC (faulty or not)
- The IP address of MELIPC built-in Ethernet port (CH1) specified in the ping command

Point

Ethernet diagnostics of MELIPC

Ethernet diagnostics of MELIPC is available to a Ping test from the MELIPC.

For details of Ethernet diagnostics of MELIPC, refer to the following manual.

Manuals of MELIPC

14.3 CC-Link IE Field Network Connection

Connection to MELIPC(MI5122-VW)

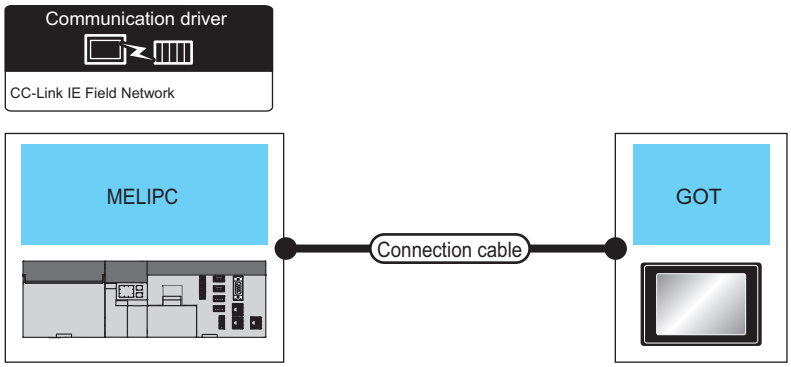

MELIPC		Connection cable		GOT		Number of connectable equipment
Model name	Communication type	Cable model*2	Overall extension cable length*1	Option device*3	Model	
MI5122-VW (CC-Link IE Field Network connector)	CC-Link IE Field Network	Ethernet cable that meets the 1000BASE-T standard: Category 5e or higher, (double-shielded, STP) straight cable.	12100 m	GT15-J71GF13-T2 *4	GT27 GT25	120 GOTs

*1 The overall extension cable length and the length between stations vary depending on the connection method (line, star or ring), the system configuration, etc.
For details, refer to the following manual.
Manuals of MELIPC

*2 Use hubs that satisfy the following conditions.
- Compliance with the IEEE802.3 (1000BASE-T)
- Supporting the auto MDI/MDI-X function
- Supporting the auto-negotiation function
- Switching hub (A repeater hub is not available.)

Recommended switching hub (Mitsubishi Electric products)

Type	Model name
Industrial switching hub	NZ2EHG-T8

For details, refer to the following manual.

Manuals of MELIPC

*3 GT25-W and GT2505-V do not support option devices.

*4 When a submaster station is in the network configuration, use the software version C or later.
The software version is the 10th digit of the serial number described on the rating plate of the unit.

GOT side settings

Setting communication interface (Controller Setting)

Set the channel of connecting equipment.

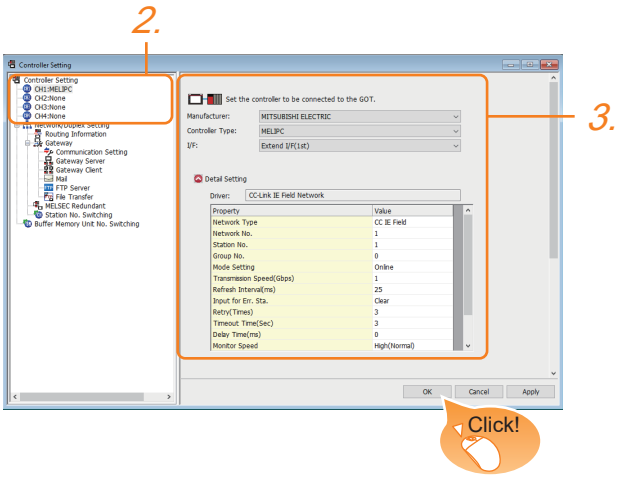

1. Select [Common] → [Controller Setting] from the menu.

2. In the [Controller Setting] window, select the channel No. to be used from the list menu.

3. Set the following items.

- [Manufacturer]: [MITSUBISHI ELECTRIC]
- [Controller Type]: [MELIPC]
- [I/F]: Interface to be used
- [Detail Setting]: Configure the settings according to the usage environment.

☞ Page 675 Communication detail settings

4. When you have completed the settings, click the [OK] button.

Point

The settings of connecting equipment can be confirmed in [I/F Communication Setting].
For details, refer to the following.
☞ Page 54 I/F communication setting

Communication detail settings

Make the settings according to the usage environment.

Property	Value
Network Type	CC IE Field
Network No.	1
Station No.	1
Group No.	0
Mode Setting	Online
Transmission Speed(Gbps)	1
Refresh Interval(ms)	25
Input for Err. Sta.	Clear
Retry(Times)	3
Timeout Time(Sec)	3
Delay Time(ms)	0
Monitor Speed	High(Normal)
CPU No. switching GD device first No. (3 points)	500
Module No. switching GD device first No. (16 points	550
Servo axis switching GD device first No. (16 points)	10

Item	Description	Range
Network Type	Set the network Type.	CC IE Field
Network No.	Set the network No. of the GOT. (Default: 1)	1 to 239
Station No.	Set the station No. of the GOT. (Default: 1)	1 to 120
Group No.	-	0 (fixed)
Mode Setting	Set the operation mode of the GOT. (Default:Online) For the details of the H/W test and self-loopback test, refer to the following. ☞ Page 677 H/W test ☞ Page 677 Self-loopback test	Online Offline H/W test Self-loopback test
Tramsmission Speed	-	1 Gbps (fixed)
Reflesh Interval	Set the number of refreshes to secure the send/receive data in station units during communication. (Default: 25ms)	1 to 1000ms
Input for Error Station	Set the hold/clear of input from the station where the data link is faulty due to some reason such as turning the power OFF. (Default: Clear)	Clear/Hold
Retry	Set the number of retries to be performed when a communication timeout occurs. When receiving no response after retries, the communication times out. (Default: 3times)	0 to 5times
Timeout Time	Set the time period for a communication to time out. (Default: 3sec)	1 to 90sec
Delay Time	Set the delay time for reducing the load of the network/destination PLC. (Default: 0ms)	0 to 300ms
Monitor Speed *1	Set the monitor speed for the CC-Link IE field network. This setting is not valid in all systems. (Default: High(Normal))	High(Normal)/Middle/Low
CPU No. switching GD device first No. (3 points)	Set the start device number of the GD devices for CPU No. switching. (Default: 500) For the details, refer to the following. ☞ Page 832 Start device number of the GD devices for CPU number switching	0 to 65520
Module No. switching GD device first No. (16 points)	Set the start device number of the GD devices for module No. switching. (Default: 550) For the details, refer to the following. ☞ Page 833 Start device number of the GD devices for module number switching	0 to 65520
Servo axis switching GD device first No. (16 points)	Set the servo axis switching GD device first No. (Default: 10) For the details, refer to the following. ☞ Page 834 Servo axis switching GD device first No.	0 to 65520

*1 When using a global label, to read or write more than 235 two-byte characters, set the [Monitor speed] to [High (Standard)] or [Middle].
If [Monitor speed] is set to [Low], a system error occurs when reading or writing.
For details, refer to the following manual.
📖GT Designer3 (GOT2000) Screen Design Manual

Point

• Switch setting example

For the switch setting example, refer to the following.

☞ Page 835 MELIPC Side Setting

• Communication interface setting by Utility

The communication interface setting can be changed on the Utility's [Communication Settings] after writing [Controller Setting] of project data.

For details on the Utility, refer to the following manual.

📖GOT2000 Series User's Manual (Utility)

• Precedence in communication settings

When settings are made by GT Designer3 or the Utility, the latest setting is effective.

• Network type

Be sure to set the same network types for the CPU side and the GOT side. If the network types of the CPU side and the GOT side are different, an error is displayed in the system alarm of the GOT side.

■Start device number of the GD devices for CPU number switching

• Specifying a CPU number with a device

[CPU No.] can be specified with the GOT internal registers (GD devices) by specifying a value (100 to 102) to [CPU No.] in the device setting dialog in GT Designer3.

Set the start device number of the GD devices to be used in [CPU No. switching GD device first No. (3 points)].

Specify [CPU No.] with the three consecutive GD devices, starting the set device number.

When [500] is set to [CPU No. switching GD device first No. (3 points)], GD500 to GD502 are used to specify [CPU No.] as shown in the following table.

CPU No.	GD device	Setting range
100	GD500	1 to 4 Setting an invalid value causes a communication timeout error. Specifying a nonexistent CPU No. or a CPU No. not supporting a multiple CPU system with a device causes a controller error.
101	GD501	
102	GD502	

• Specifying a CPU number with a device on the initially-displayed screen

Set [CPU No. switching GD device first No. (3 points)] so that the values of the GD devices are retained and monitored upon the GOT startup.

• Specifying a CPU number with a device in a multi-channel connection

If the setting range of [CPU No. switching GD device first No. (3 points)] set in each channel overlaps, the monitoring target CPU No. set to each channel is switched simultaneously.

Set [CPU No. switching GD device first No. (3 points)] in each channel so that the setting range does not overlap.

• Specifying a CPU number and a station number with devices in a multi-channel connection

When GD10 to GD25 are used to specify the station No. of an inverter or non-Mitsubishi temperature controller connected, setting [10] to [CPU No. switching GD device first No. (3 points)] in a different channel switches the monitoring target CPU No. and station No. of an inverter or non-Mitsubishi temperature controller set to each channel simultaneously.

Set [CPU No. switching GD device first No. (3 points)] so that the setting range does not overlap the station No. of an inverter or non-Mitsubishi temperature controller.

■Start device number of the GD devices for module number switching

• Specifying a module number with a device

In a connection via a simple motion module, [Unit No.] can be specified with the GOT internal registers (GD devices) by specifying a value (100 to 10F) to [Unit No.] in the device setting dialog in GT Designer3.

Set the start device number of the GD devices to be used in [Module No. switching GD device first No. (16 points)].

Specify [Unit No.] with the 16 consecutive GD devices, starting the set device number.

When [550] is set to [Module No. switching GD device first No. (16 points)], GD550 to GD565 are used to specify [Unit No.] as shown in the following table.

Unit No.	GD device	Setting range
100	GD550	The setting range depends on [Unit Type]. • When [MELSEC iQ-R, RnMT/NC/RT, CR800-D], [MELSEC iQ-R, RnMT/RT, CR800-D], [MELSEC-Q/QS, Q17nD/M/NC/DR/DSR, CRnD-700], [MELSEC-Q, Q17nD/M/DR/DSR, CRnD-700], [MELSEC-L] or [MELIPC] is selected for [Unit Type] 00 to FF • When [MELSEC iQ-F] is selected for [Unit Type] 01 to 10 Setting an invalid value causes a device range error.
101	GD551	
102	GD552	
103	GD553	
104	GD554	
105	GD555	
106	GD556	
107	GD557	
108	GD558	
109	GD559	
10A	GD560	
10B	GD561	
10C	GD562	
10D	GD563	
10E	GD564	
10F	GD565	

• Specifying a module number with a device on the initially-displayed screen

Set [Module No. switching GD device first No. (16 points)] so that the values of the GD devices are retained and monitored upon the GOT startup.

• Specifying a module number with a device in a multi-channel connection

If the setting range of [Module No. switching GD device first No. (16 points)] set in each channel overlaps, the module No. of the simple motion module via the servo amplifier device of each channel is switched simultaneously.

Set [Module No. switching GD device first No. (16 points)] for each channel so that the setting range does not overlap.

• Specifying a station number and a module number with devices in a multi-channel connection

When GD10 to GD25 are used to specify the station No. of an inverter or non-Mitsubishi temperature controller connected, setting [10] to [Module No. switching GD device first No. (16 points)] switches the module No. of the simple motion module via the servo amplifier device and the station No. of an inverter or non-Mitsubishi temperature controller set to each channel simultaneously.

Set [Module No. switching GD device first No. (16 points)] so that the setting range does not overlap the station No. of an inverter or non-Mitsubishi temperature controller.

■Servo axis switching GD device first No.

• Indirect specification of the servo axis No.

In a connection via a Motion CPU or Simple Motion module, a servo axis No. can be indirectly specified with GOT internal registers (GD devices) by specifying a value (100 to 115) to the axis No. of the servo amplifier device.

Set the start device number of the GD devices to be used in [Servo axis switching GD device first No. (16 points)].

Specify a servo axis number with 16 consecutive GD devices, starting the set device number.

When [10] is set to [Servo axis switching GD device first No. (16 points)], GD10 to GD25 are used to specify a servo axis number as shown in the following table.

Servo axis No.	GD device	Setting range
100	GD10	1 to 64 Setting an invalid value causes a device range error.
101	GD11	
102	GD12	
103	GD13	
104	GD14	
105	GD15	
106	GD16	
107	GD17	
108	GD18	
109	GD19	
110	GD20	
111	GD21	
112	GD22	
113	GD23	
114	GD24	
115	GD25	

• Specifying a servo axis number with a device on the initially-displayed screen

Set [Servo axis switching GD device first No. (16 points)] so that the values of the GD devices are retained and monitored upon the GOT startup.

• Specifying a servo axis number with a device in a multi-channel connection

If the setting rage of [Servo axis switching GD device first No. (16 points)] set in each channel overlaps, the axis No. of the servo amplifier of each channel is switched simultaneously.

Set [Servo axis switching GD device first No. (16 points)] for each channel so that the setting range does not overlap.

• Specifying a station number and a servo axis number with devices in a multi-channel connection

When GD10 to GD25 are used to specify the station No. of an inverter or non-Mitsubishi temperature controller connected, setting [10] to [Servo axis switching GD device first No. (16 points)] switches the axis No. of the servo amplifier and the station No. of an inverter or non-Mitsubishi temperature controller set to each channel simultaneously.

Set [Servo axis switching GD device first No. (16 points)] so that the setting range does not overlap the station No. of an inverter or non-Mitsubishi temperature controller.

MELIPC Side Setting

Model name		Refer to
MELIPC	MI5122-VW	☞ Page 835 MELIPC Side Setting

This section describes the settings of the GOT and MELIPC in the following case of system configuration.

Point

CC-Link IE Field Network Module

For details of the CC-Link IE Field Network module, refer to the following manual.

📖Manuals of MELIPC

Connecting to MELIPC

■System configuration

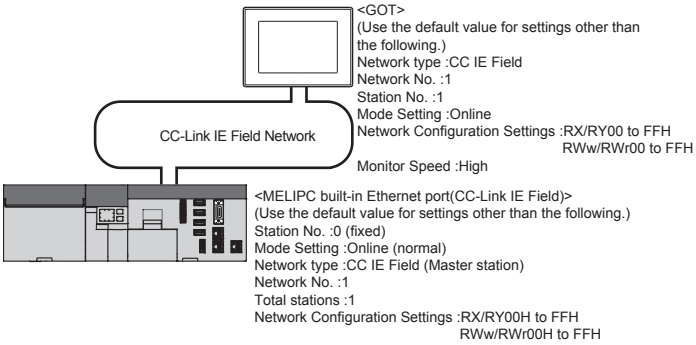

■Module parameter settings of System configuration

- [Application Parameter] of MI Configurator

1) CC-Link IE Field Network Parameter

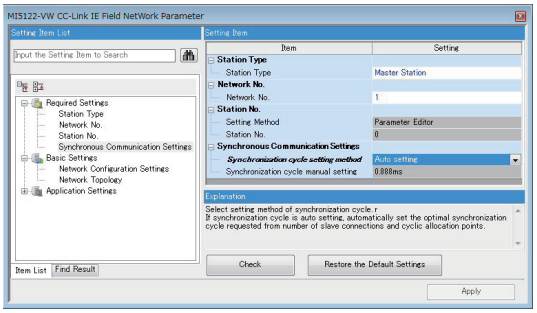

Item		Set value range	Set value	Setting necessity at GOT connection
Station type		Master station/Local station	Master station	○
Network No.		1 to 239	*1	○
Station number setting		Parameter Editor (fixed)	Parameter Editor (fixed)	○
Station No.	Master station	0 (fixed)	0 (fixed)	○
	Local station	1 to 120	-	-
Synchronous communication setting	Setting in 0.05 ms units	Not set/Set	(Use default value)	×
	Synchronous cycle setting (not set in 0.05 ms units)	0.222ms/0.444ms/0.888ms/ 1.777/3.555ms/7.111ms		×
	Synchronous cycle setting (set in 0.05 ms units)	0.10 to 0.50 to 10.00		×
Network Configuration Settings		☞ 2) Network Configuration Settings		×

○: Necessary △: As necessary ×: Not necessary

*1 Specify the same network No. as that of the GOT.

2) Network Configuration Settings

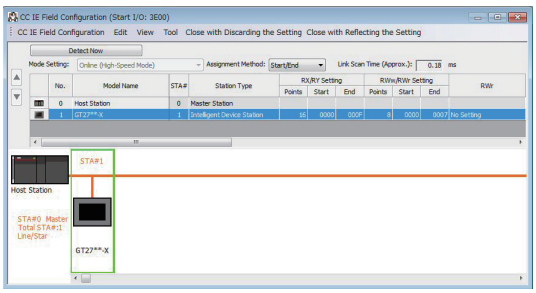

Item				Set value	Setting necessity at GOT connection
Rx/RY, RWw/RWr setting(1)*1	Rx/RY setting	Station No.1	Start	0000H	△
			End	00FFH	△
	RWw/RWr setting	Station No.1	Start	0000H	△
			End	00FFH	△
Reserved/Error Invalid Station				No setting	△

○: Necessary △: As necessary ×: Not necessary

*1 Be sure to set it to perform the cyclic transmission.

Point

- When changing the module parameter

After writing module parameters to the PLC CPU, turn the PLC CPU OFF then back ON again, or reset the PLC CPU.

- GOT station type

Set the GOT as an intelligent device station.

■GT Designer3 [Communication settings] of System configuration (Network Type: CC IE Field)

Item	Set value
Network Type	CC IE Field
Network No.	1: Network No.1
Station No.	1: Station No.1
Group No.	0 (fixed)
Mode Setting	Online
Refresh Interval	25ms (Use default value)
Input for Err. Sta.	Clear (Use default value)
Retry	3times (Use default value)
Timeout Time	3sec (Use default value)
Delay Time	0ms (Use default value)
Monitor Speed	High (Normal) (Use default value)

Point

[Controller Setting] of GT Designer3

For the setting method of [Controller Setting] of GT Designer3, refer to the following.

☞ Page 830 Setting communication interface (Controller Setting)

14.4 Settable Device Range

For the device setting dialog, refer to the following.

☞ Page 1384 Device setting dialog (Mitsubishi Electric equipment)

For details on the device range that can be used on the GOT, refer to the following.

☞ Page 1548 [MELIPC]

MEMO

15 INVERTER CONNECTION

- Page 839 Connectable Model List
- Page 844 Serial Connection
- Page 903 Ethernet Connection
- Page 914 CC-Link IE TSN CONNECTION
- Page 926 Connection through a PLC
- Page 930 Settable Device Range

15.1 Connectable Model List

The following table shows the connectable models.

Type	Series *2	Model name	Clock	Communication type	Connectable model	Refer to
Inverter	FR-A500(L) series	FR-A5□0(L)	×	RS-485	GT27 GT25 GT23 GT21 07W GT21 05Q GT21 04R GT21 03P 04P ET/R4 GT21 03P 04P R4 GS25 GS21 *1	☞ Page 844 Connection to FR-A500(L), FR-F500(L), or FR-V500(L)
	FR-F500(L) series	FR-F5□0(L)				
	FR-V500(L) series	FR-V5□0(L)				
	FR-E500 series	FR-E5□0(C) FR-E5□0S FR-E5□0W	×	RS-485	GT27 GT25 GT23 GT21 07W GT21 05Q GT21 04R GT21 03P 04P ET/R4 GT21 03P 04P R4 GS25 GS21 *1	☞ Page 848 Connection to FR-E500, FR-S500(E), FR-F500J, FR-D700, or FR-F700PJ
	FR-S500(E) series	FR-S5□0(E)(-R)(-C) FR-S5□0S(E)(-R) FR-S5□0W(E)(-R)				
	FR-F500J series	FR-F5□0J(F)				
	FR-D700 series	FR-D7□0 FR-D7□0S FR-D7□0W				
	FR-F700PJ series	FR-F7□0PJ(F)				
	FR-E700 series	FR-E7□0 FR-E7□0S FR-E7□0W	×	RS-485	GT27 GT25 GT23 GT21 07W GT21 05Q GT21 04R GT21 03P 04P ET/R4 GT21 03P 04P R4 GS25 GS21 *1	☞ Page 850 Connection to FR-E700 or sensorless servo (FR-E7□0EX)
		FR-E7□0-NE *5	×	Ethernet	GT27 GT25 GT23 GT21 07W GT21 04R GT21 03P 04P ET/R4 GS25 GS21	☞ Page 903 Connection to FR-E700, FR-A800, FR-A800 Plus, FR-F800, or FR-E800
	FR-A700 series	FR-A7□0	×	RS-485	GT27 GT25 GT23 GT21 07W GT21 05Q GT21 04R GT21 03P 04P ET/R4 GT21 03P 04P R4 GS25 GS21 *1	☞ Page 853 Connection to FR-A700, FR-F700, or FR-F700P
	FR-F700 series	FR-F7□0				
	FR-F700P series	FR-F7□0P				

Type	Series *2	Model name	Clock	Communication type	Connectable model	Refer to
Inverter	FR-A800 series	FR-A8□0 FR-A8□2 FR-A8□6	×	RS-485	GT27 GT25 GT23 GT21 07W GT21 05Q GT21 04R GT21 03P 04P ET/R4 GT21 03P 04P R4 GS25 GS21 *1	☞ Page 857 Connection to FR-A800, FR-A800 Plus, FR-F800, or FR-E800
				Ethernet *6	GT27 GT25 GT23 GT21 07W GT21 04R GT21 03P 04P ET/R4 GS25 GS21	☞ Page 903 Connection to FR-E700, FR-A800, FR-A800 Plus, FR-F800, or FR-E800
				CC-Link IE TSN *6	GT27 GT25	☞ Page 914 Connection to FR-A800, FR-F800, or FR-E800
				*3	GT27 GT25 GT23 GT21 07W GT21 05Q GT21 04R GT21 03P 04P ET/R4 GT21 03P 04P R4 GT21 03P 04P R2 GS25 GS21	☞ Page 926 Connection to FR-E700, FR-A800, FR-A800 Plus, FR-F800, or FR-E800
		FR-A8□0-E FR-A8□2-E FR-A8□6-E	×	RS-485	GT27 GT25 GT23 GT21 07W GT21 05Q GT21 04R GT21 03P 04P ET/R4 GT21 03P 04P R4 GS25 GS21 *1	☞ Page 857 Connection to FR-A800, FR-A800 Plus, FR-F800, or FR-E800
				Ethernet	GT27 GT25 GT23 GT21 07W GT21 04R GT21 03P 04P ET/R4 GS25 GS21	☞ Page 903 Connection to FR-E700, FR-A800, FR-A800 Plus, FR-F800, or FR-E800
				*3	GT27 GT25 GT23 GT21 07W GT21 05Q GT21 04R GT21 03P 04P ET/R4 GT21 03P 04P R4 GT21 03P 04P R2 GS25 GS21	☞ Page 926 Connection to FR-E700, FR-A800, FR-A800 Plus, FR-F800, or FR-E800
		FR-A8□0-GF FR-A8□2-GF	×	RS-485	GT27 GT25 GT23 GT21 07W GT21 05Q GT21 04R GT21 03P 04P ET/R4 GT21 03P 04P R4 GS25 GS21 *1	☞ Page 857 Connection to FR-A800, FR-A800 Plus, FR-F800, or FR-E800
				*3	GT27 GT25 GT23 GT21 07W GT21 05Q GT21 04R GT21 03P 04P ET/R4 GT21 03P 04P R4 GT21 03P 04P R2 GS25 GS21	☞ Page 926 Connection to FR-E700, FR-A800, FR-A800 Plus, FR-F800, or FR-E800

Type	Series *2	Model name	Clock	Communication type	Connectable model	Refer to
Inverter	FR-A800 series	FR-A8□0-GN FR-A8□2-GN	×	RS-485	GT27 GT25 GT23 GT21 07W GT21 05Q GT21 04R GT21 03P 04P ET/R4 GT21 03P 04P R4 GS25 GS21 *1	☞ Page 857 Connection to FR-A800, FR-A800 Plus, FR-F800, or FR-E800
				Ethernet	GT27 GT25 GT23 GT21 07W GT21 04R GT21 03P 04P ET/R4 GS25 GS21	☞ Page 903 Connection to FR-E700, FR-A800, FR-A800 Plus, FR-F800, or FR-E800
				CC-Link IE TSN	GT27 GT25	☞ Page 914 Connection to FR-A800, FR-F800, or FR-E800
				*3	GT27 GT25 GT23 GT21 07W GT21 05Q GT21 04R GT21 03P 04P ET/R4 GT21 03P 04P R4 GT21 03P 04P R2 GS25 GS21	☞ Page 926 Connection to FR-E700, FR-A800, FR-A800 Plus, FR-F800, or FR-E800
	FR-A800 Plus series	FR-A8□0-CRN FR-A8□2-CRN FR-A8□0-R2R FR-A8□2-R2R FR-A8□0-AWH FR-A8□0-LC	×	RS-485	GT27 GT25 GT23 GT21 07W GT21 05Q GT21 04R GT21 03P 04P ET/R4 GT21 03P 04P R4 GS25 GS21 *1	☞ Page 857 Connection to FR-A800, FR-A800 Plus, FR-F800, or FR-E800
				*3	GT27 GT25 GT23 GT21 07W GT21 05Q GT21 04R GT21 03P 04P ET/R4 GT21 03P 04P R4 GT21 03P 04P R2 GS25 GS21	☞ Page 926 Connection to FR-E700, FR-A800, FR-A800 Plus, FR-F800, or FR-E800
		FR-A8□0-E-CRN FR-A8□2-E-CRN FR-A8□0-E-R2R FR-A8□2-E-R2R FR-A8□0-E-AWH FR-A8□0-E-LC	×	RS-485	GT27 GT25 GT23 GT21 07W GT21 05Q GT21 04R GT21 03P 04P ET/R4 GT21 03P 04P R4 GS25 GS21 *1	☞ Page 857 Connection to FR-A800, FR-A800 Plus, FR-F800, or FR-E800
				Ethernet	GT27 GT25 GT23 GT21 07W GT21 04R GT21 03P 04P ET/R4 GS25 GS21	☞ Page 903 Connection to FR-E700, FR-A800, FR-A800 Plus, FR-F800, or FR-E800
				*3	GT27 GT25 GT23 GT21 07W GT21 05Q GT21 04R GT21 03P 04P ET/R4 GT21 03P 04P R4 GT21 03P 04P R2 GS25 GS21	☞ Page 926 Connection to FR-E700, FR-A800, FR-A800 Plus, FR-F800, or FR-E800

15

Type	Series *2	Model name	Clock	Communication type	Connectable model	Refer to
Inverter	FR-F800 series	FR-F8□0 FR-F8□2 FR-F8□6	×	RS-485	GT27 GT25 GT23 GT21 07W GT21 05Q GT21 04R GT21 03P 04P ET/R4 GT21 03P 04P R4 GS25 GS21 *1	☞ Page 857 Connection to FR-A800, FR-A800 Plus, FR-F800, or FR-E800
				Ethernet *6	GT27 GT25 GT23 GT21 07W GT21 04R GT21 03P 04P ET/R4 GS25 GS21	☞ Page 903 Connection to FR-E700, FR-A800, FR-A800 Plus, FR-F800, or FR-E800
				CC-Link IE TSN *6	GT27 GT25	☞ Page 914 Connection to FR-A800, FR-F800, or FR-E800
				*3	GT27 GT25 GT23 GT21 07W GT21 05Q GT21 04R GT21 03P 04P ET/R4 GT21 03P 04P R4 GT21 03P 04P R2 GS25 GS21	☞ Page 926 Connection to FR-E700, FR-A800, FR-A800 Plus, FR-F800, or FR-E800
		FR-F8□0-E *4 FR-F8□2-E *4	×	RS-485	GT27 GT25 GT23 GT21 07W GT21 05Q GT21 04R GT21 03P 04P ET/R4 GT21 03P 04P R4 GS25 GS21 *1	☞ Page 857 Connection to FR-A800, FR-A800 Plus, FR-F800, or FR-E800
				Ethernet	GT27 GT25 GT23 GT21 07W GT21 04R GT21 03P 04P ET/R4 GS25 GS21	☞ Page 903 Connection to FR-E700, FR-A800, FR-A800 Plus, FR-F800, or FR-E800
				*3	GT27 GT25 GT23 GT21 07W GT21 05Q GT21 04R GT21 03P 04P ET/R4 GT21 03P 04P R4 GT21 03P 04P R2 GS25 GS21	☞ Page 926 Connection to FR-E700, FR-A800, FR-A800 Plus, FR-F800, or FR-E800

Type	Series *2	Model name	Clock	Communication type	Connectable model	Refer to
Inverter	FR-E800 series	FR-E8□0	×	RS-485	GT27 GT25 GT23 GT21 07W GT21 05Q GT21 04R GT21 03P 04P ET/R4 GT21 03P 04P R4 GS25 GS21	☞ Page 857 Connection to FR-A800, FR-A800 Plus, FR-F800, or FR-E800
		FR-E8□0-E	×	Ethernet	GT27 GT25 GT23 GT21 07W GT21 04R GT21 03P 04P ET/R4 GS25 GS21	☞ Page 903 Connection to FR-E700, FR-A800, FR-A800 Plus, FR-F800, or FR-E800
				CC-Link IE TSN	GT27 GT25	☞ Page 914 Connection to FR-A800, FR-F800, or FR-E800
				*3	GT27 GT25 GT23 GT21 07W GT21 05Q GT21 04R GT21 03P 04P ET/R4 GT21 03P 04P R4 GT21 03P 04P R2 GS25 GS21	☞ Page 926 Connection to FR-E700, FR-A800, FR-A800 Plus, FR-F800, or FR-E800
Sensorless servo	-	FR-E7□0EX	×	RS-485	GT27 GT25 GT23 GT21 07W GT21 05Q GT21 04R GT21 03P 04P ET/R4 GT21 03P 04P R4 GS25 GS21 *1	☞ Page 850 Connection to FR-E700 or sensorless servo (FR-E7□0EX)
Magnet motor drive	MELIPM series	MD-CX522-□K(-A0)	×	RS-485	GT27 GT25 GT23 GT21 07W GT21 05Q GT21 04R GT21 03P 04P ET/R4 GT21 03P 04P R4 GS25 GS21 *1	☞ Page 863 Connection to MELIPM

*1 For GS21-W, use the RS-422 interface for connection.
*2 The GOT supports the FR-B, B3 series (explosion-proof type of FR-A700 and FR-A800 series).
*3 The communication type depends on the connection type between a PLC CPU and the GOT.
*4 When the communication type is the Ethernet connection and the communication format is TCP, use an inverter with SERIAL (serial No.) "□7Z******" or later.
SERIAL (serial No.) is described on a rating plate of the inverter.
*5 Use an inverter with SERIAL (serial No.) "□88******" or later.
For FR-E700-SC-NNE and FR-E700-SC-ENE, use an inverter with SERIAL (serial No.) "□89******" or later.
SERIAL (serial No.) is described on a rating plate of the inverter.
*6 A built-in option (FR-A8NCG) is required.
Use an inverter with the following SERIAL (serial No.).
SERIAL (serial No.) is described on a rating plate of the inverter.

Country of origin indication	SERIAL (serial No.)
MADE in Japan	□96****** and later
MADE in China	□97****** and later

15.2 Serial Connection

Connection to FR-A500(L), FR-F500(L), or FR-V500(L)

When connecting to one inverter

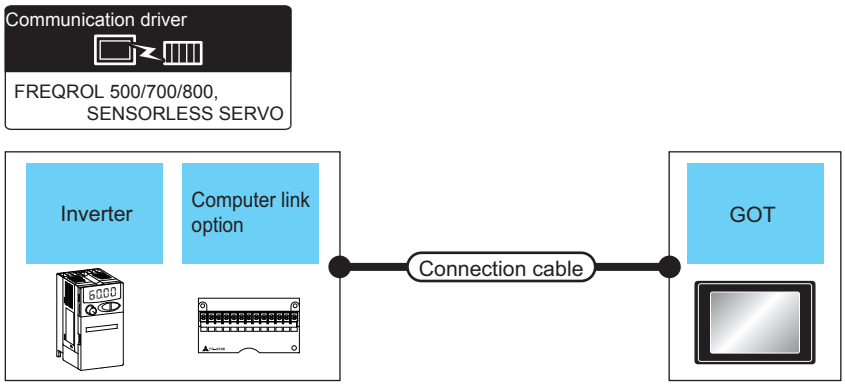

Inverter			Connection cable		GOT		Number of connectable equipment
Model name	Computer link option	Communication type	Connection diagram number	Max. distance	Option device*3	Model	
FR-A5□0(L) FR-F5□0(L) FR-V5□0(L)	-	RS-485	User preparing Page 865 RS-485 connection diagram 1) *1	500m	- (Built into GOT)	GT27 GT25 GT23 GT21 07W GT21 05Q GS25 GS21 *2	1 GOT for 1 inverter
					GT15-RS4-9S	GT27 GT25	
					GT10-C02H-9SC	GT21 04R GT21 03P 04P R4	
			User preparing Page 869 RS-485 connection diagram 10) *1	500m	- (Built into GOT)	GT21 04R GT21 03P 04P ET/R4 GT21 03P 04P R4	
FR-A5□0(L) FR-F5□0(L) FR-V5□0(L)	FR-A5NR		User preparing Page 865 RS-485 connection diagram 2)	500m	- (Built into GOT)	GT27 GT25 GT23 GT21 07W GT21 05Q GS25 GS21 *2	
					GT15-RS4-9S	GT27 GT25	
					GT10-C02H-9SC	GT21 04R GT21 03P 04P R4	
			User preparing Page 869 RS-485 connection diagram 11)	500m	- (Built into GOT)	GT21 04R GT21 03P 04P ET/R4 GT21 03P 04P R4	

*1 Connect to the PU port of the inverter.
*2 For GS21-W, use the RS-422 interface for connection.
*3 GT25-W and GT2505-V do not support option devices.

When connecting to multiple inverters (Max. 31) (Using the distributor)

Communication driver

FREQROL 500/700/800, SENSORLESS SERVO

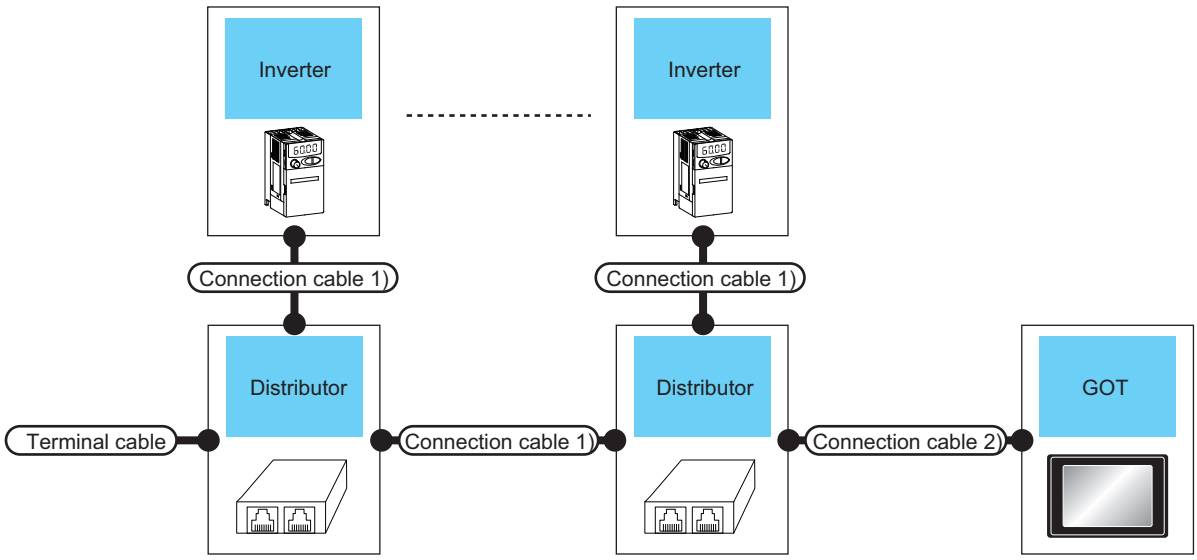

Inverter		Terminal cable	Connection cable 1)	Distributor*2	Connection cable 2)	GOT		Max. distance	Number of connectable equipment
Model name	Communication type		Connection diagram number	Model name	Connection diagram number	Option device*5	Model		
FR-A5□0(L) FR-F5□0(L) FR-V5□0(L)	RS-485	User preparing Page 868 RS-485 connection diagram 9)	User preparing Page 866 RS-485 connection diagram 3) *1	BMJ-8 (Recommended)	User preparing Page 865 RS-485 connection diagram 1)	- (Built into GOT)	GT27 GT25 GT23 GT21 07W GT21 05Q GS25 GS21 *4	500m	31 inverters for one GOT*3
						GT15-RS4-9S	GT27 GT25		
						GT10-C02H-9SC	GT21 04R GT21 03P 04P R4		
				BMJ-8 (Recommended)	User preparing Page 869 RS-485 connection diagram 10)	- (Built into GOT)	GT21 04R GT21 03P 04P ET/R4 GT21 03P 04P R4		

*1 Connect to the PU port of the inverter.
*2 The distributor is a product manufactured by HAKKO ELECTRIC CO., LTD. For details, contact HAKKO ELECTRIC CO., LTD.
*3 Up to 10 inverters can be connected to GS21-W.
*4 For GS21-W, use the RS-422 interface for connection.
*5 GT25-W and GT2505-V do not support option devices.

When connecting to multiple inverters (Max. 31) (Using the computer link option)

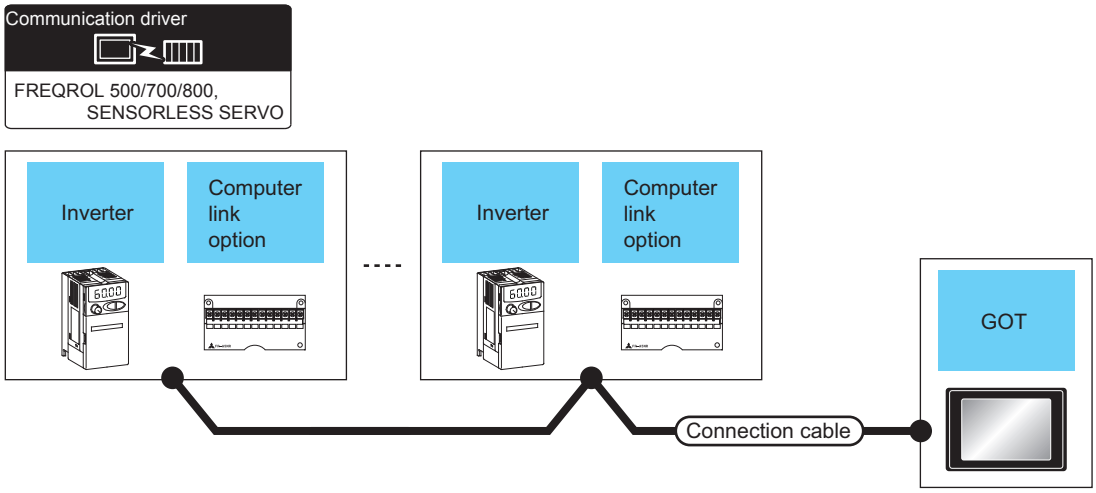

Inverter			Connection cable	GOT		Max. distance	Number of connectable equipment
Model name	Computer link option	Communication type	Connection diagram number	Option device*3	Model		
FR-A5□0(L) FR-F5□0(L) FR-V5□0(L)	FR-A5NR	RS-485	User preparing Page 866 RS-485 connection diagram 4)	- (Built into GOT)	GT27 GT25 GT23 GT21 07W GT21 05Q GS25 GS21 *2	500m	31 inverters for one GOT*1
				GT15-RS4-9S	GT27 GT25		
				GT10-C02H-9SC	GT21 04R GT21 03P 04P R4		
			User preparing Page 870 RS-485 connection diagram 12)	- (Built into GOT)	GT21 04R GT21 03P 04P ET/R4 GT21 03P 04P R4		

*1 Up to 10 inverters can be connected to GS21-W.
*2 For GS21-W, use the RS-422 interface for connection.
*3 GT25-W and GT2505-V do not support option devices.

Connection to FR-E500, FR-S500(E), FR-F500J, FR-D700, or FR-F700PJ

When connecting to one inverter

Communication driver

FREQROL 500/700/800, SENSORLESS SERVO

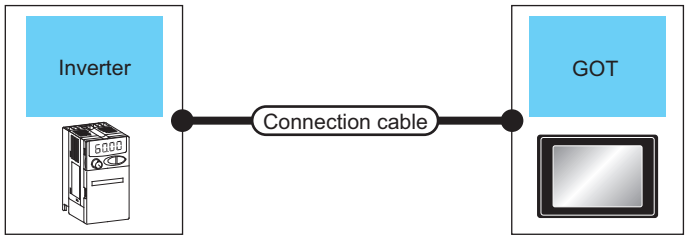

Inverter		Connection cable		GOT		Number of connectable equipment
Model name	**Communication type**	**Connection diagram number**	**Max. distance**	**Option device*3**	**Model**	
FR-E5□0(C) FR-E5□0S FR-E5□0W FR-S5□0(E)(-R)(-C) FR-S5□0S(E)(-R) FR-S5□0W(E)(-R) FR-F5□0J(F) FR-D7□0 FR-D7□0S FR-D7□0W FR-F7□0PJ(F)	RS-485	User preparing Page 865 RS-485 connection diagram 1) *1	500m	- (Built into GOT)	GT27 GT25 GT23 GT21 07W GT21 05Q GS25 GS21 *2	1 GOT for 1 inverter
				GT15-RS4-9S	GT27 GT25	
				GT10-C02H-9SC	GT21 04R GT21 03P 04P R4	
		User preparing Page 869 RS-485 connection diagram 10) *1	500m	- (Built into GOT)	GT21 04R GT21 03P 04P ET/R4 GT21 03P 04P R4	

*1 Connect to the PU port of the inverter.
*2 For GS21-W, use the RS-422 interface for connection.
*3 GT25-W and GT2505-V do not support option devices.

When connecting to multiple inverters (Max. 31) (Using the distributor)

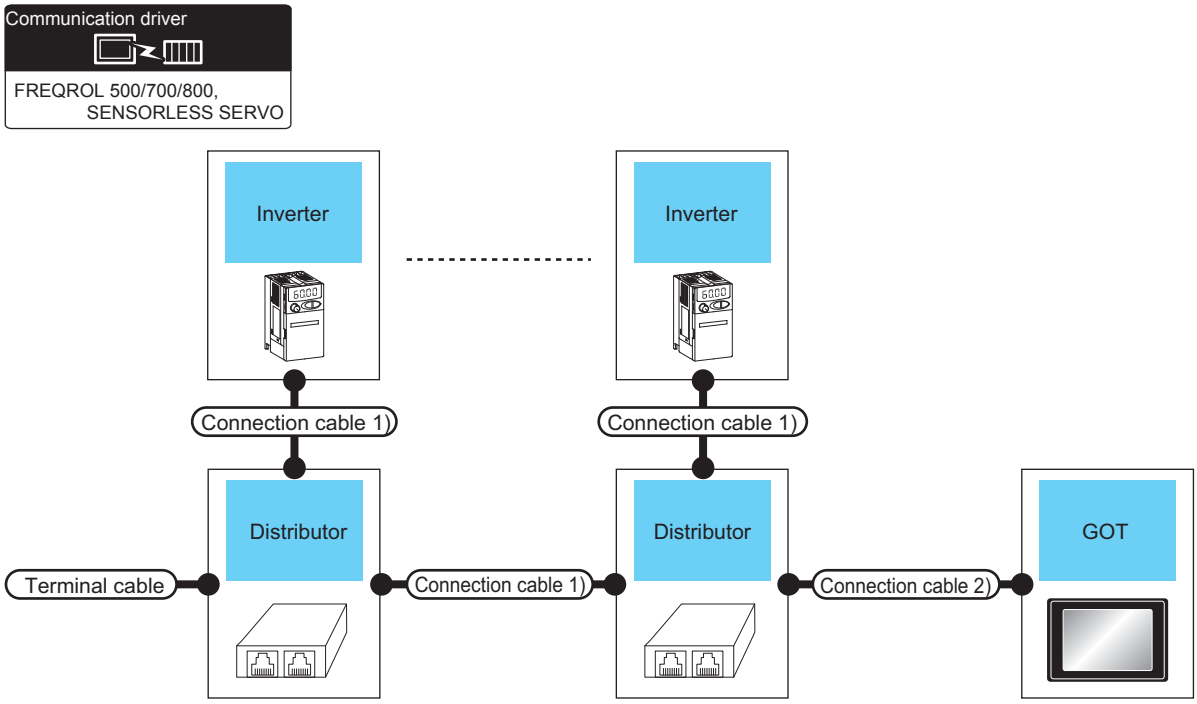

Inverter		Terminal cable	Connection cable 1)	Distributor*2	Connection cable 2)	GOT		Max. distance	Number of connectable equipment
Model name	Communication type		Connection diagram number	Model name	Connection diagram number	Option device*5	Model		
FR-E5□0(C) FR-E5□0S FR-E5□0W FR-S5□0(E)(-R)(-C) FR-S5□0S(E)(-R) FR-S5□0W(E)(-R) FR-F5□0J(F) FR-D7□0 FR-D7□0S FR-D7□0W FR-F7□0PJ(F)	RS-485	User preparing Page 868 RS-485 connection diagram 9)	User preparing Page 866 RS-485 connection diagram 3) *1	BMJ-8 (Recommended)	User preparing Page 865 RS-485 connection diagram 1)	- (Built into GOT)	GT27 GT25 GT23 GT21 07W GT21 05C GS25 GS21 *4	500m	31 inverters for one GOT*3
						GT15-RS4-9S	GT27 GT25		
						GT10-C02H-9SC	GT21 04R GT21 03P 04P R4		
				BMJ-8 (Recommended)	User preparing Page 869 RS-485 connection diagram 10)	- (Built into GOT)	GT21 04R GT21 03P 04P ETR4 GT21 03P 04P R4		

*1 Connect to the PU port of the inverter.
*2 The distributor is a product manufactured by HAKKO ELECTRIC CO., LTD. For details, contact HAKKO ELECTRIC CO., LTD.
*3 Up to 10 inverters can be connected to GS21-W.
*4 For GS21-W, use the RS-422 interface for connection.
*5 GT25-W and GT2505-V do not support option devices.

Connection to FR-E700 or sensorless servo (FR-E7□0EX)

When connecting to one inverter

Communication driver

FREQROL 500/700/800, SENSORLESS SERVO

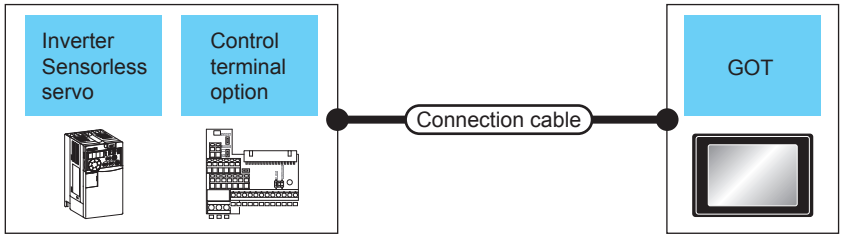

Inverter			Connection cable		GOT		Number of connectable equipment
Model name	**Control terminal option**	**Communication type**	**Connection diagram number**	**Max. distance**	**Option device*4**	**Model**	
FR-E7□0 FR-E7□0S FR-E7□0W FR-E7□0EX	-	RS-485	User preparing Page 865 RS-485 connection diagram 1) *1	500m	- (Built into GOT)	GT27 GT25 GT23 GT21 07W GT21 05Q GS25 GS21 *3	1 GOT for 1 inverter
					GT15-RS4-9S	GT27 GT25	
					GT10-C02H-9SC	GT21 04R GT21 03P 04P R4	
			User preparing Page 869 RS-485 connection diagram 10) *1	500m	- (Built into GOT)	GT21 04R GT21 03P 04P ET/R4 GT21 03P 04P R4	
FR-E7□0 FR-E7□0S FR-E7□0W FR-E7□0EX	FR-E7TR*2	RS-485	User preparing Page 868 RS-485 connection diagram 7)	500m	- (Built into GOT)	GT27 GT25 GT23 GT21 07W GT21 05Q GS25 GS21	
					GT15-RS4-9S	GT27 GT25	
					GT10-C02H-9SC	GT21 04R GT21 03P 04P R4	
			User preparing Page 871 RS-485 connection diagram 15)	500m	- (Built into GOT)	GT21 04R GT21 03P 04P ET/R4 GT21 03P 04P R4	

*1 Connect to the PU port of the inverter.
*2 The control terminal option and the PU port cannot be used at the same time.
*3 For GS21-W, use the RS-422 interface for connection.
*4 GT25-W and GT2505-V do not support option devices.

When connecting to multiple inverters (Max. 31) (Using the distributor)

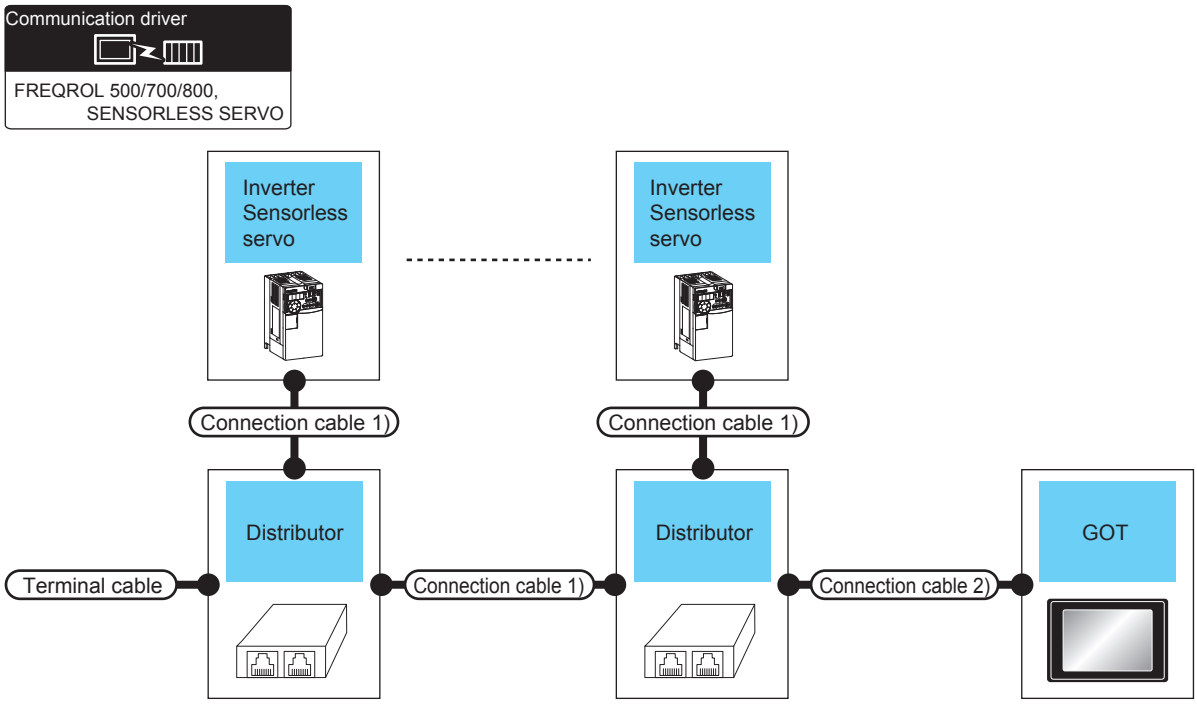

Inverter		Terminating cable	Connection cable 1)	Distributor*2	Connection cable 2)	GOT		Max. distance	Number of connectable equipment
Model name	Communication type		Connection diagram number	Model name	Connection diagram number	Option device*5	Model		
FR-E7□0 FR-E7□0S FR-E7□0W FR-E7□0EX	RS-485	User preparing Page 868 RS-485 connection diagram 9)	User preparing Page 866 RS-485 connection diagram 3) *1	BMJ-8 (Recommended)	User preparing Page 865 RS-485 connection diagram 1)	- (Built into GOT)	GT27 GT25 GT23 GT21 07W GT21 05Q GS25 GS21 *4	500m	31inverters for one GOT*3
						GT15-RS4-9S	GT27 GT25		
						GT10-C02H-9SC	GT21 04R GT21 03P 04P R4		
				BMJ-8 (Recommended)	User preparing Page 869 RS-485 connection diagram 10)	- (Built into GOT)	GT21 04R GT21 03P 04P ET/R4 GT21 03P 04P R4		

*1 Connect to the PU port of the inverter.
*2 The distributor is a product manufactured by HAKKO ELECTRIC CO., LTD. For details, contact HAKKO ELECTRIC CO., LTD.
*3 Up to 10 inverters can be connected to GS21-W.
*4 For GS21-W, use the RS-422 interface for connection.
*5 GT25-W and GT2505-V do not support option devices.

When connecting to multiple inverters (Max. 31) (Using the control terminal option)

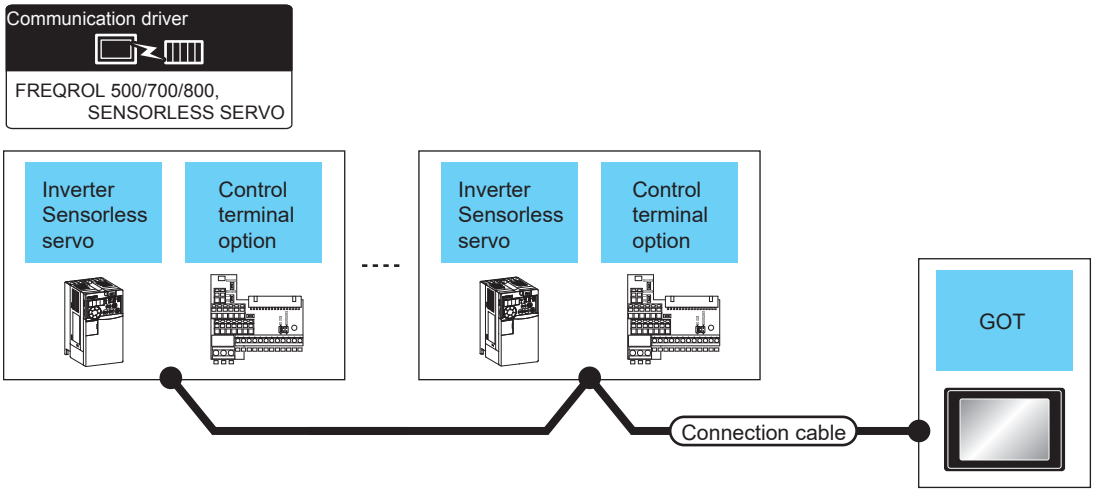

Inverter			Connection cable	GOT		Max. distance	Number of connectable equipment
Model name	**Control terminal option**	**Communication type**	**Connection diagram number**	**Option device*4**	**Model**		
FR-E7□0 FR-E7□0S FR-E7□0W FR-E7□0EX	FR-E7TR*1	RS-485	User preparing Page 868 RS-485 connection diagram 8)	- (Built into GOT)	GT27 GT25 GT23 GT21 07W GT21 05Q GS25 GS21 *3	500m	31 inverters for one GOT*2
				GT15-RS4-9S	GT27 GT25		
				GT10-C02H-9SC	GT21 04R GT21 03P 04P R4		
			User preparing Page 872 RS-485 connection diagram 16)	- (Built into GOT)	GT21 04R GT21 03P 04P ET/R4 GT21 03P 04P R4		

*1 The control terminal option and the PU port cannot be used at the same time.
*2 Up to 10 inverters can be connected to GS21-W.
*3 For GS21-W, use the RS-422 interface for connection.
*4 GT25-W and GT2505-V do not support option devices.

Connection to FR-A700, FR-F700, or FR-F700P

When connecting to one inverter

Communication driver

FREQROL 500/700/800, SENSORLESS SERVO

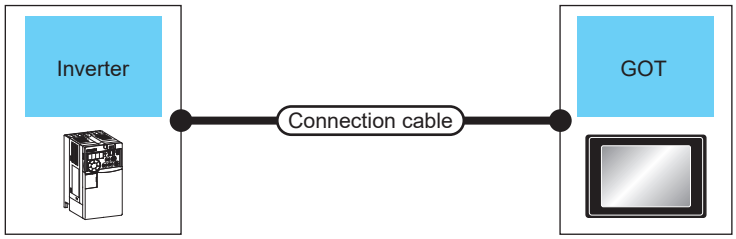

Inverter		Connection cable		GOT		Number of connectable equipment
Model name *2	Communication type	Connection diagram number	Max. distance	Option device *3	Model	
FR-A7□0 FR-F7□0 FR-F7□0P	RS-485	User preparing Page 865 RS-485 connection diagram 1) *4	500m	- (Built into GOT)	GT27 GT25 GT23 GT21(07W) GT21(05Q) GS25 GS21 *1	1 GOT for 1 inverter
				GT15-RS4-9S	GT27 GT25	
				GT10-C02H-9SC	GT21(04R) GT21(03P/04P R4)	
		User preparing Page 869 RS-485 connection diagram 10) *4	500m	- (Built into GOT)	GT21(04R) GT21(03P/04P ET/R4) GT21(03P/04P R4)	
FR-A7□0 FR-F7□0 FR-F7□0P	RS-485	User preparing Page 867 RS-485 connection diagram 5) *5	500m	- (Built into GOT)	GT27 GT25 GT23 GT21(07W) GT21(05Q) GS25 GS21	1 GOT for 1 inverter
				GT15-RS4-9S	GT27 GT25	
				GT10-C02H-9SC	GT21(04R) GT21(03P/04P R4)	
		User preparing Page 870 RS-485 connection diagram 13) *5	500m	- (Built into GOT)	GT21(04R) GT21(03P/04P ET/R4) GT21(03P/04P R4)	

*1 For GS21-W, use the RS-422 interface for connection.
*2 The GOT supports the FR-B, B3 series (explosion-proof type of FR-A700 series).
*3 GT25-W and GT2505-V do not support option devices.
*4 Connect to the PU port of the inverter.
*5 Connect to the RS-485 terminal block of the inverter.

When connecting to multiple inverters (Max. 31) (Using the distributor)

Communication driver

FREQROL 500/700/800, SENSORLESS SERVO

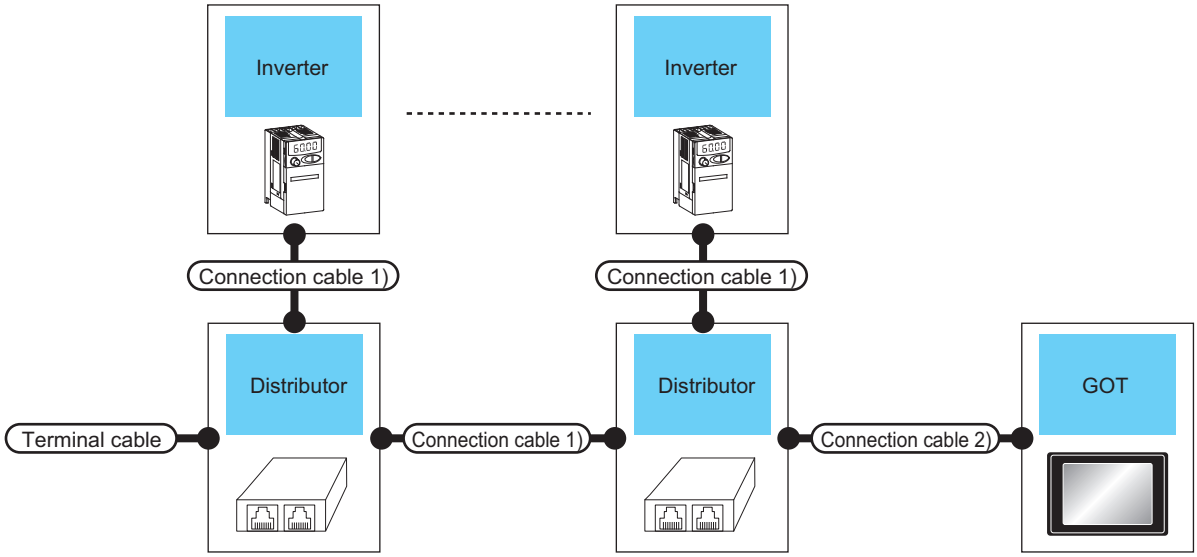

Inverter		Terminal cable	Connection cable 1)	Distributor *1	Connection cable 2)	GOT		Max. distance	Number of connectable equipment
Model name *4	Communication type		Connection diagram number	Model name	Connection diagram number	Option device *5	Model		
FR-A7□0 FR-F7□0 FR-F7□0P	RS-485	User preparing Page 868 RS-485 connection diagram 9)	User preparing Page 866 RS-485 connection diagram 3) *6	BMJ-8 (Recommended)	User preparing Page 865 RS-485 connection diagram 1)	- (Built into GOT)	GT27 GT25 GT23 GT21 GT21 GS25 GS21 *3	500m	31 inverters for one GOT *2
						GT15-RS4-9S	GT27 GT25		
						GT10-C02H-9SC	GT21 GT21		
				BMJ-8 (Recommended)	User preparing Page 869 RS-485 connection diagram 10)	- (Built into GOT)	GT21 GT21 GT21		

*1 The distributor is a product manufactured by HAKKO ELECTRIC CO., LTD. For details, contact HAKKO ELECTRIC CO., LTD.
*2 Up to 10 inverters can be connected to GS21-W.
*3 For GS21-W, use the RS-422 interface for connection.
*4 The GOT supports the FR-B, B3 series (explosion-proof type of FR-A700 series).
*5 GT25-W and GT2505-V do not support option devices.
*6 Connect to the PU port of the inverter.

When connecting to multiple inverters (Max. 31) (Using the built-in RS485 terminal block)

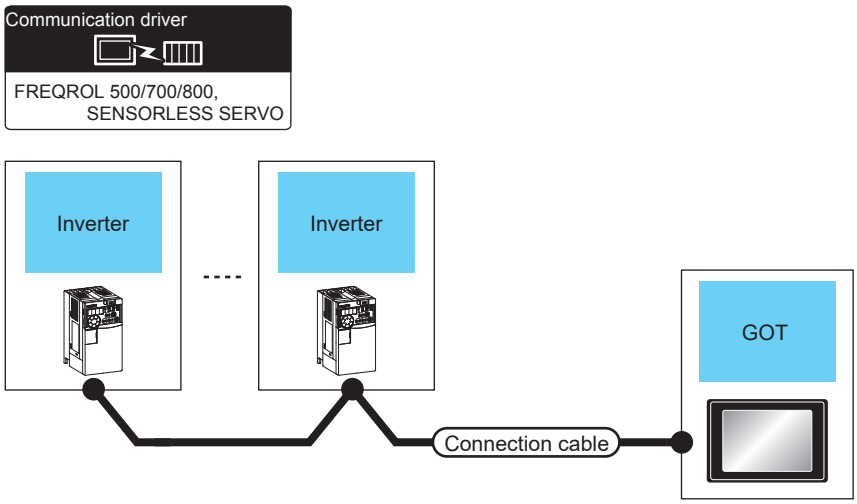

Inverter		Connection cable	GOT		Max. distance	Number of connectable equipment
Model name *3	Communication type	Connection diagram number	Option device *4	Model		
FR-A7□0 FR-F7□0 FR-F7□0P	RS-485	User preparing Page 867 RS-485 connection diagram 6) *5	- (Built into GOT)	GT27 GT25 GT23 GT21 07W GT21 05Q GS25 GS21 *2	500m	31 inverters for one GOT *1
			GT15-RS4-9S	GT27 GT25		
			GT10-C02H-9SC	GT21 04R GT21 03P 04P R4		
		User preparing Page 871 RS-485 connection diagram 14) *5	- (Built into GOT)	GT21 04R GT21 03P 04P ETR4 GT21 03P 04P R4		

*1 Up to 10 inverters can be connected to GS21-W.
*2 For GS21-W, use the RS-422 interface for connection.
*3 The GOT supports the FR-B, B3 series (explosion-proof type of FR-A700 series).
*4 GT25-W and GT2505-V do not support option devices.
*5 Connect to the RS-485 terminal of the inverter.

Connection to FR-A800, FR-A800 Plus, FR-F800, or FR-E800

When connecting to one inverter

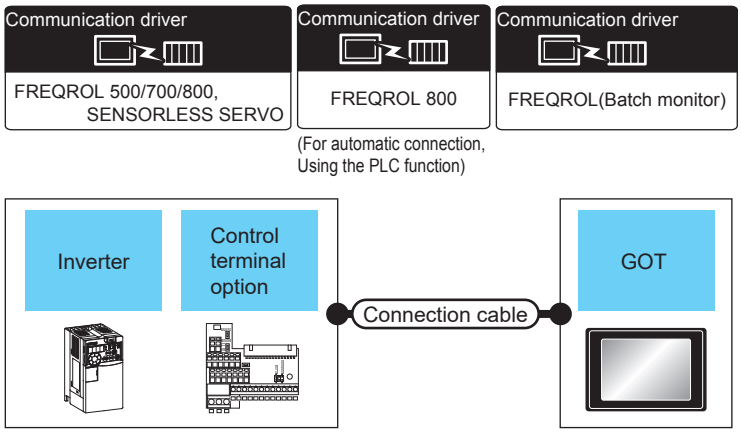

Inverter			Connection cable		GOT		Number of connectable equipment
Model name *3	Control terminal option	Communication type	Connection diagram number	Max. distance	Option device *4	Model	
FR-A8□0 FR-A8□2 FR-A8□6 FR-A8□0-E FR-A8□2-E FR-A8□6-E FR-A8□0-GF FR-A8□2-GF FR-A8□0-GN FR-A8□2-GN FR-A8□0-CRN FR-A8□2-CRN FR-A8□0-E-CRN FR-A8□2-E-CRN FR-A8□0-R2R FR-A8□2-R2R FR-A8□0-E-R2R FR-A8□2-E-R2R FR-A8□0-AWH FR-A8□0-E-AWH FR-A8□0-LC FR-A8□0-E-LC FR-F8□0 FR-F8□2 FR-F8□6 FR-F8□0-E FR-F8□2-E FR-E8□0	-	RS-485	User preparing Page 865 RS-485 connection diagram 1) *5	500m	- (Built into GOT)	GT27 GT25 GT23 GT21 07W GT21 05Q GS25 GS21 *1	1 GOT for 1 inverter
					GT15-RS4-9S	GT27 GT25	
					GT10-C02H-9SC	GT21 04R GT21 03P 04P R4	
			User preparing Page 869 RS-485 connection diagram 10) *5	500m	- (Built into GOT)	GT21 04R GT21 03P 04P BT/R4 GT21 03P 04P R4	

15

Inverter			Connection cable		GOT		Number of connectable equipment
Model name *3	Control terminal option	Communication type	Connection diagram number	Max. distance	Option device *4	Model	
FR-A8□0 FR-A8□2 FR-A8□6 FR-A8□0-GN FR-A8□2-GN FR-A8□0-CRN FR-A8□2-CRN FR-A8□0-R2R FR-A8□2-R2R FR-A8□0-AWH FR-A8□0-LC FR-F8□0 FR-F8□2 FR-F8□6	-	RS-485	User preparing Page 867 RS-485 connection diagram 5) *6	500m	- (Built into GOT)	GT27 GT25 GT23 GT21 07W GT21 05Q GS25 GS21 *1	1 GOT for 1 inverter
					GT15-RS4-9S	GT27 GT25	
					GT10-C02H-9SC	GT21 04R GT21 03P 04P R4	
			User preparing Page 870 RS-485 connection diagram 13) *6	500m	- (Built into GOT)	GT21 04R GT21 03P 04P ET/R4 GT21 03P 04P R4	
FR-A8□0-E FR-A8□2-E FR-A8□6-E	A8ERS *2	RS-485	User preparing Page 867 RS-485 connection diagram 5)	500m	- (Built into GOT)	GT27 GT25 GT23 GT21 07W GT21 05Q GS25 GS21 *1	1 GOT for 1 inverter
					GT15-RS4-9S	GT27 GT25	
					GT10-C02H-9SC	GT21 04R GT21 03P 04P R4	
			User preparing Page 870 RS-485 connection diagram 13)	500m	- (Built into GOT)	GT21 04R GT21 03P 04P ET/R4 GT21 03P 04P R4	

*1 For GS21-W, use the RS-422 interface for connection.
*2 The control terminal option and the PU port cannot be used at the same time.
*3 The GOT supports the FR-B, B3 series (explosion-proof type of FR-A800 series).
*4 GT25-W and GT2505-V do not support option devices.
*5 Connect to the PU port of the inverter.
*6 Connect to the RS-485 terminal block of the inverter.

When connecting to multiple inverters (Max. 31) (Using the distributor)

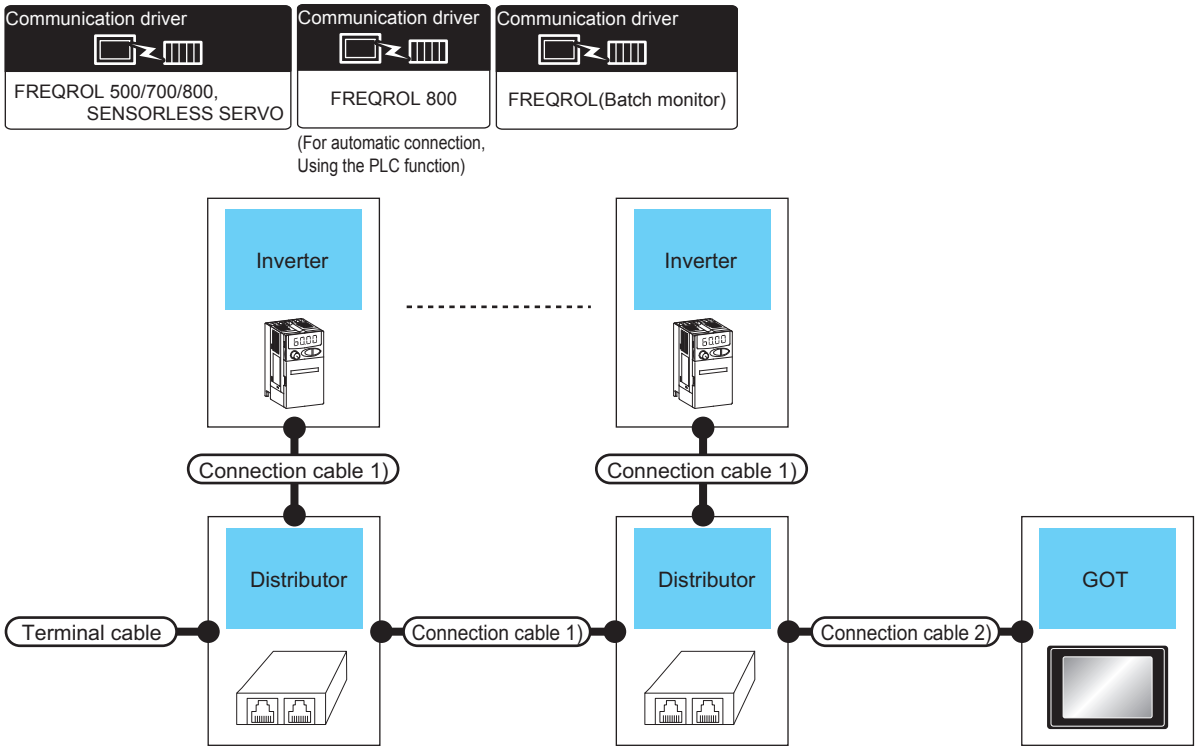

Inverter		Terminal cable	Connection cable 1)	Distributor *1	Connection cable 2)	GOT		Max. distance	Number of connectable equipment
Model name *4	Communication type		Connection diagram number	Model name	Connection diagram number	Option device *5	Model		
FR-A8□0 FR-A8□2 FR-A8□6 FR-A8□0-E FR-A8□2-E FR-A8□6-E FR-A8□0-GF FR-A8□2-GF FR-A8□0-GN FR-A8□2-GN FR-A8□0-CRN FR-A8□2-CRN FR-A8□0-E-CRN FR-A8□2-E-CRN FR-A8□0-R2R FR-A8□2-R2R FR-A8□0-E-R2R FR-A8□2-E-R2R FR-A8□0-AWH FR-A8□0-E-AWH FR-A8□0-LC FR-A8□0-E-LC FR-F8□0 FR-F8□2 FR-F8□6 FR-F8□0-E FR-F8□2-E FR-E8□0	RS-485	User preparing Page 868 RS-485 connection diagram 9)	User preparing Page 866 RS-485 connection diagram 3) *6	BMJ-8 (Recommended)	User preparing Page 865 RS-485 connection diagram 1)	- (Built into GOT)	GT27 GT25 GT23 GT21 07W GT21 05Q GS25 GS21 *3	500m	31 inverters for one GOT *2
						GT15-RS4-9S	GT27 GT25		
						GT10-C02H-9SC	GT21 04R GT21 03P 04P R4		
				BMJ-8 (Recommended)	User preparing Page 869 RS-485 connection diagram 10)	- (Built into GOT)	GT21 04R GT21 03P 04P ET/R4 GT21 03P 04P R4		

*1 The distributor is a product manufactured by HAKKO ELECTRIC CO., LTD. For details, contact HAKKO ELECTRIC CO., LTD.
*2 Up to 10 inverters can be connected to GS21-W.
*3 For GS21-W, use the RS-422 interface for connection.
*4 The GOT supports the FR-B, B3 series (explosion-proof type of FR-A800 series).
*5 GT25-W and GT2505-V do not support option devices.
*6 Connect to the PU port of the inverter.

When connecting to multiple inverters (Max. 31) (Using the built-in RS485 terminal or control terminal option)

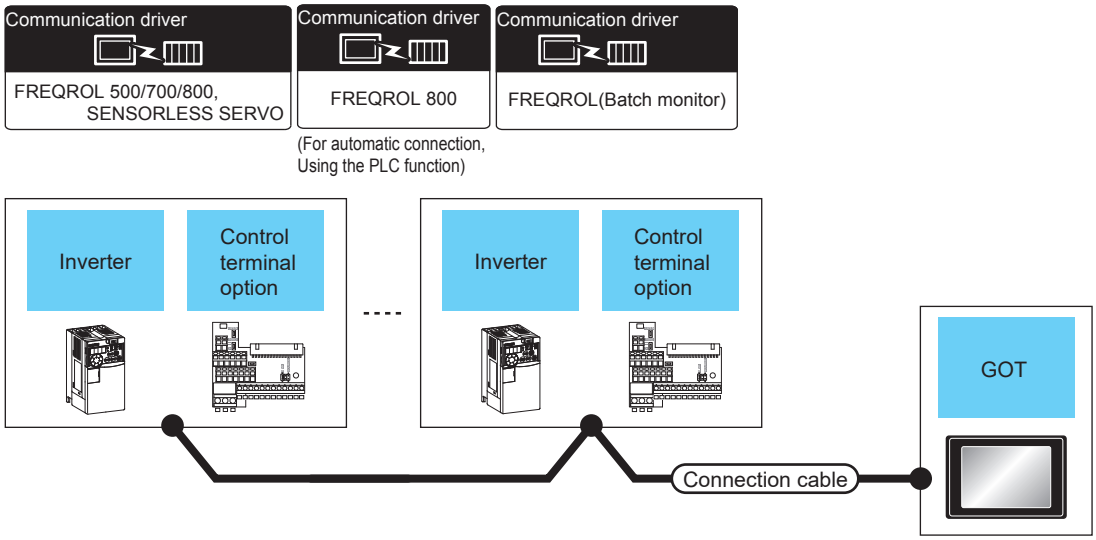

Inverter			Connection cable	GOT		Max. distance	Number of connectable equipment
Model name *3	Control terminal option	Communication type	Connection diagram number	Option device *4	Model		
FR-A8□0 FR-A8□2 FR-A8□6 FR-A8□0-GN FR-A8□2-GN FR-A8□0-CRN FR-A8□2-CRN FR-A8□0-R2R FR-A8□2-R2R FR-A8□0-AWH FR-A8□0-LC FR-F8□0 FR-F8□2 FR-F8□6	-	RS-485	User preparing Page 867 RS-485 connection diagram 6) *5	- (Built into GOT)	GT27 GT25 GT23 GT21 07W GT21 050 GS25 GS21 *2	500m	31 inverters for one GOT *1
				GT15-RS4-9S	GT27 GT25		
				GT10-C02H-9SC	GT21 04R GT21 03P 04P R4		
			User preparing Page 871 RS-485 connection diagram 14) *5	- (Built into GOT)	GT21 04R GT21 03P 04P ET/R4 GT21 03P 04P R4		

15

Inverter			Connection cable	GOT		Max. distance	Number of connectable equipment
Model name *3	**Control terminal option**	**Communication type**	**Connection diagram number**	**Option device** *4	**Model**		
FR-A8□0-E FR-A8□2-E FR-A8□6-E	A8ERS	RS-485	User preparing Page 867 RS-485 connection diagram 6)	- (Built into GOT)	GT27 GT25 GT23 GT21 07W GT21 05Q GS25 GS21 *2	500m	31 inverters for one GOT *1
				GT15-RS4-9S	GT27 GT25		
				GT10-C02H-9SC	GT21 04R GT21 03P 04P R4		
			User preparing Page 871 RS-485 connection diagram 14)	- (Built into GOT)	GT21 04R GT21 03P 04P ET/R4 GT21 03P 04P R4		

*1 Up to 10 inverters can be connected to GS21-W.
*2 For GS21-W, use the RS-422 interface for connection.
*3 The GOT supports the FR-B, B3 series (explosion-proof type of FR-A800 series).
*4 GT25-W and GT2505-V do not support option devices.
*5 Connect to the RS-485 terminal of the inverter.

Connection to MELIPM

When connecting to one inverter

Communication driver

FREQROL 500/700/800,
SENSORLESS SERVO

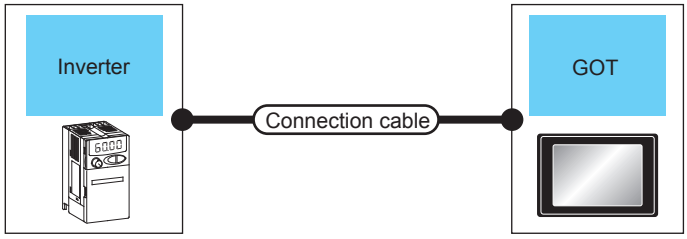

Inverter		Connection cable		GOT		Number of connectable equipment
Model name	**Communication type**	**Connection diagram number**	**Max. distance**	**Option device*3**	**Model**	
MD-CX522-□K(-A0)	RS-485	User preparing Page 865 RS-485 connection diagram 1) *1	20m	- (Built into GOT)	GT27 GT25 GT23 GT21 07W GT21 05Q GS25 GS21 *2	1 GOT for 1 inverter
				GT15-RS4-9S	GT27 GT25	
				GT10-C02H-9SC	GT21 04R GT21 03P 04P R4	
		User preparing Page 869 RS-485 connection diagram 10) *1	20m	- (Built into GOT)	GT21 04R GT21 03P 04P ET/R4 GT21 03P 04P R4	

*1 Connect to the PU port of the inverter.
*2 For GS21-W, use the RS-422 interface for connection.
*3 GT25-W and GT2505-V do not support option devices.

When connecting to multiple inverters (Max. 31) (Using the distributor)

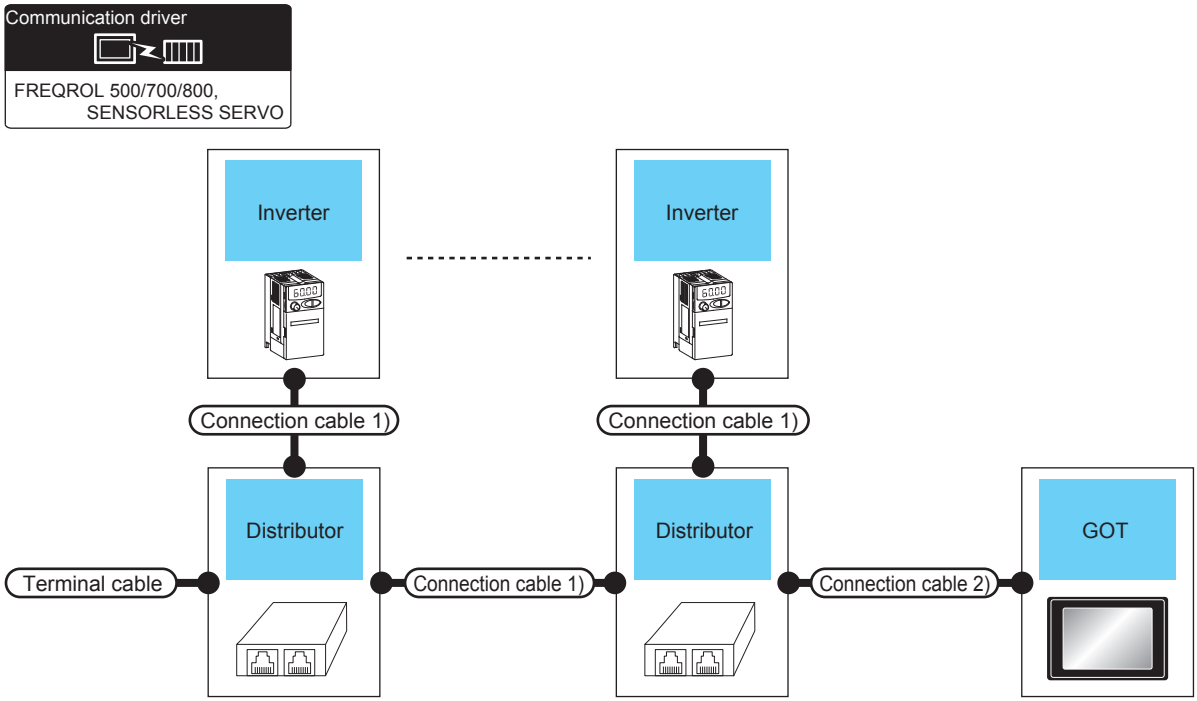

Inverter		Terminating cable	Connection cable 1)	Distributor*2	Connection cable 2)	GOT		Max. distance	Number of connectable equipment
Model name	Communication type		Connection diagram number	Model name	Connection diagram number	Option device*5	Model		
MD-CX522-□K(-A0)	RS-485	User preparing Page 868 RS-485 connection diagram 9)	User preparing Page 866 RS-485 connection diagram 3) *1	BMJ-8 (Recommended)	User preparing Page 865 RS-485 connection diagram 1)	- (Built into GOT)	GT27 GT25 GT23 GT21 07W GT21 05Q GS25 GS21 *4	20m	31 inverters for one GOT*3
						GT15-RS4-9S	GT27 GT25		
						GT10-C02H-9SC	GT21 04R GT21 03P 04P R4		
				BMJ-8 (Recommended)	User preparing Page 865 RS-485 connection diagram 1)	- (Built into GOT)	GT21 04R GT21 03P 04P ET/R4 GT21 03P 04P R4		

*1 Connect to the PU port of the inverter.
*2 The distributor is a product manufactured by HAKKO ELECTRIC CO., LTD. For details, contact HAKKO ELECTRIC CO., LTD.
*3 Up to 10 inverters can be connected to GS21-W.
*4 For GS21-W, use the RS-422 interface for connection.
*5 GT25-W and GT2505-V do not support option devices.

Connection diagram

The following diagram shows the connection between the GOT and the inverter.

RS-485 cable

■RS-485 connection diagram 1)

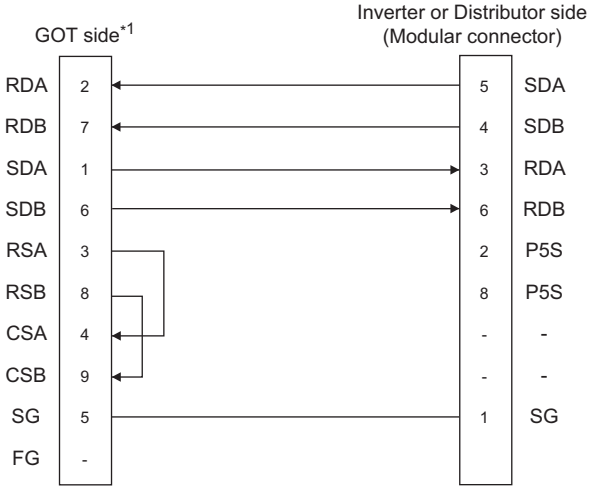

*1 For GT27, GT25 (except GT2505-V), GT23, or GS25, set the terminating resistor to "Disable".
For GT2505-V, GT21, and GS21-W-N, set the terminating resistor to 330 Ω.
For GS21-W, since the terminating resistor is fixed to 330 Ω, no setting is required for the terminating resistor.
☞ Page 68 Terminating resistors of GOT

■RS-485 connection diagram 2)

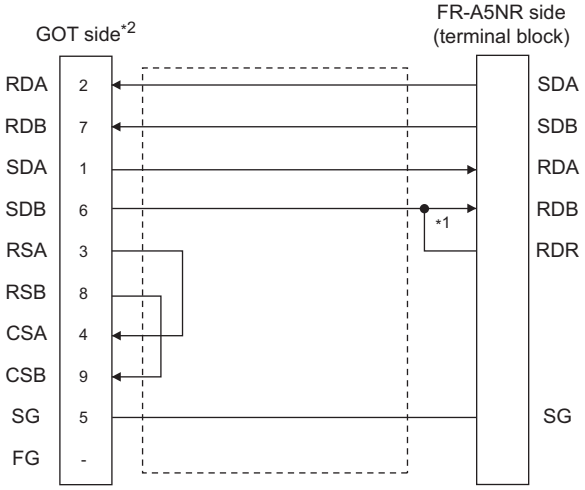

*1 Connect a terminating resistor jumper to RDB and RDR.The terminating resister jumper is packed together with the FR-A5NR.
*2 For GT27, GT25 (except GT2505-V), GT23, or GS25, set the terminating resistor to "Disable".
For GT2505-V, GT21, and GS21-W-N, set the terminating resistor to 330 Ω.
For GS21-W, since the terminating resistor is fixed to 330 Ω, no setting is required for the terminating resistor.
☞ Page 68 Terminating resistors of GOT

■RS-485 connection diagram 3)

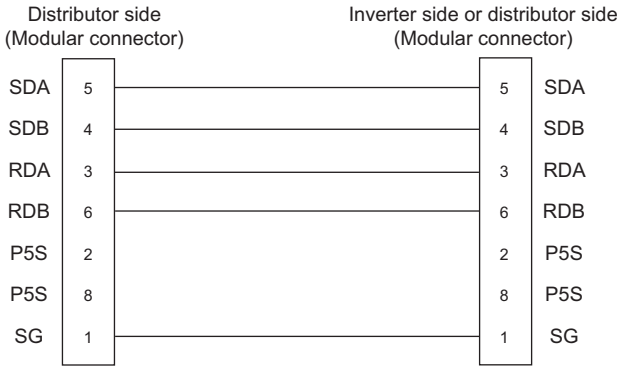

■RS-485 connection diagram 4)

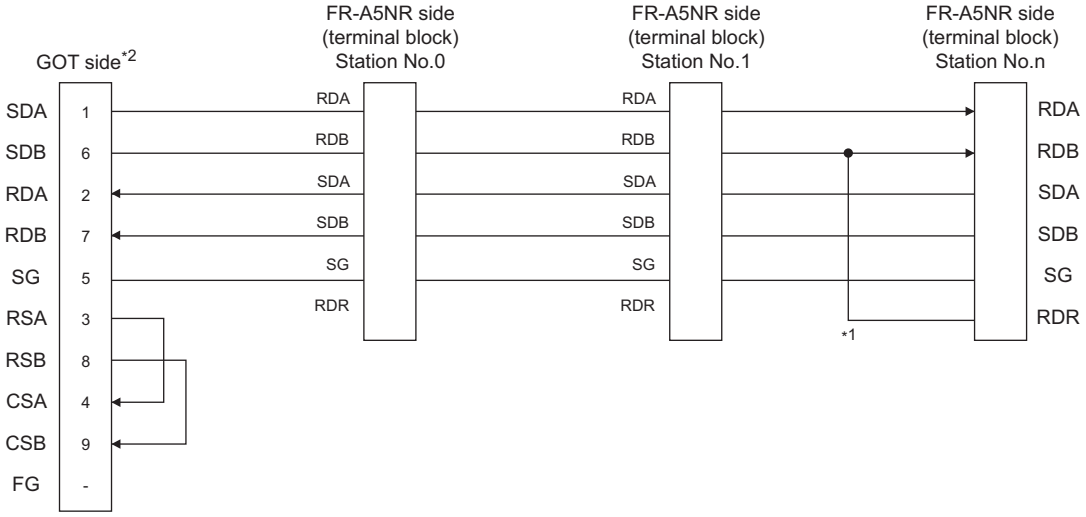

*1 Connect a terminating resistor jumper to RDB and RDR which are assigned in the FR-A5NR of the inverter located farthest from the GOT.
The terminating resister jumper is packed together with the FR-A5NR.

*2 For GT27, GT25 (except GT2505-V), GT23, or GS25 positioned at the end in the system configuration, set the terminating resistor to "Enable".
For GT2505-V, GT21, or GS21-W-N in the end position of the system configuration, set the terminating resistor to 330 Ω.
For GS21-W, since the terminating resistor is fixed to 330 Ω, no setting is required for the terminating resistor.
☞ Page 68 Terminating resistors of GOT

■RS-485 connection diagram 5)

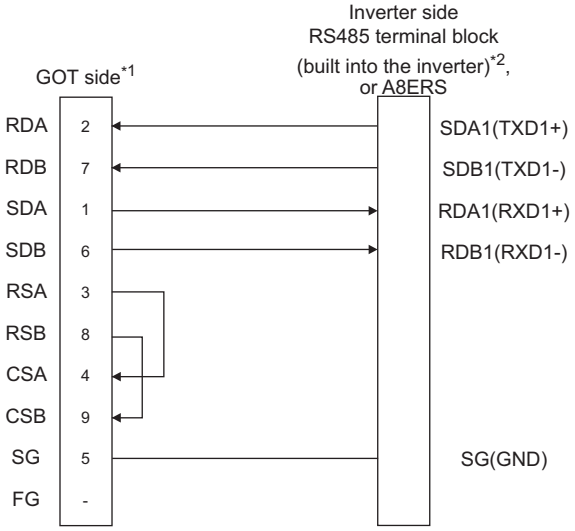

*1 For GT27, GT25 (except GT2505-V), GT23, or GS25 positioned at the end in the system configuration, set the terminating resistor to "Disable".
For GT2505-V, GT21, or GS21-W-N in the end position of the system configuration, set the terminating resistor to 330 Ω.
For GS21-W, since the terminating resistor is fixed to 330 Ω, no setting is required for the terminating resistor.
☞ Page 68 Terminating resistors of GOT

*2 RDA2, RDB2, SDA2 and SDB2 terminals of the RS-485 terminal block (built into the inverter) cannot be used.

■RS-485 connection diagram 6)

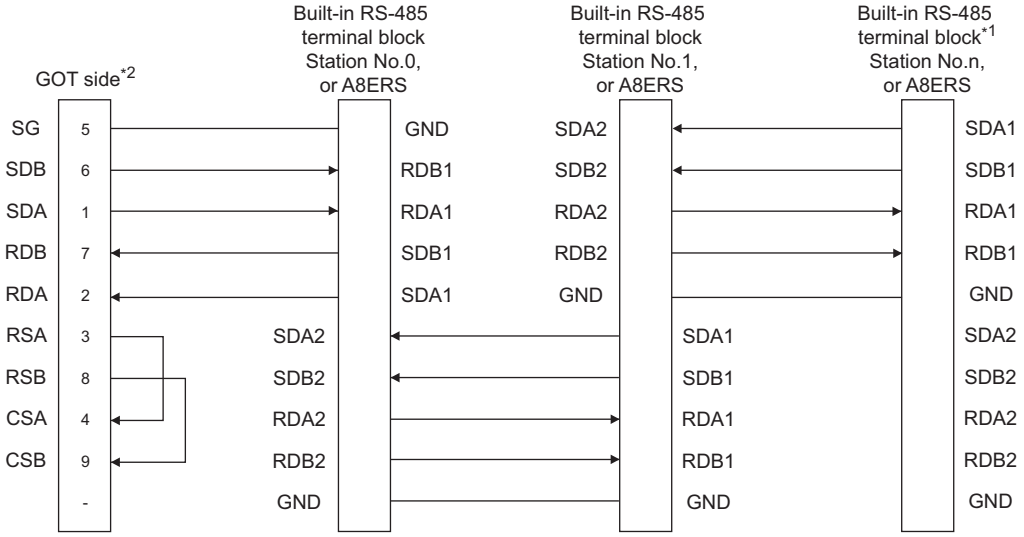

*1 Set the terminator switch built in the farthest inverter from the GOT to ON (100Ω).

*2 For GT27, GT25 (except GT2505-V), GT23, or GS25 positioned at the end in the system configuration, set the terminating resistor to "Enable".
For GT2505-V, GT21, or GS21-W-N in the end position of the system configuration, set the terminating resistor to 330 Ω.
For GS21-W, since the terminating resistor is fixed to 330 Ω, no setting is required for the terminating resistor.
☞ Page 68 Terminating resistors of GOT

■RS-485 connection diagram 7)

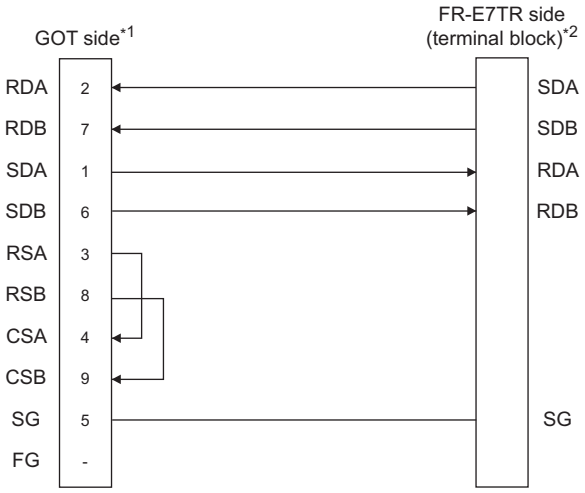

*1 For GT27, GT25 (except GT2505-V), GT23, or GS25 positioned at the end in the system configuration, set the terminating resistor to "Enable".
For GT2505-V, GT21, or GS21-W-N in the end position of the system configuration, set the terminating resistor to 330 Ω.
For GS21-W, since the terminating resistor is fixed to 330 Ω, no setting is required for the terminating resistor.
☞ Page 68 Terminating resistors of GOT

*2 Turn ON (100Ω) the terminator switch for the FR-E7TR.

■RS-485 connection diagram 8)

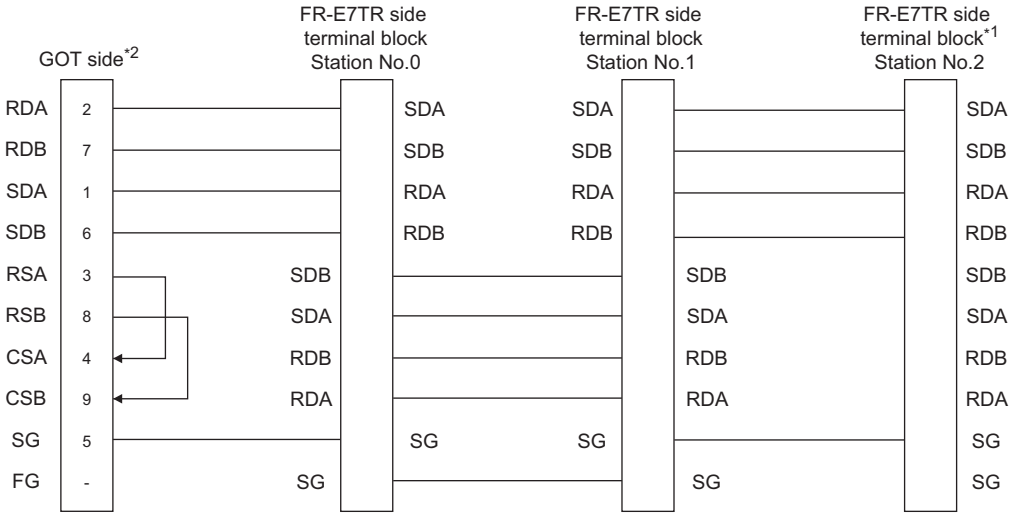

*1 Turn ON (100Ω) the terminator switch for the most distant FR-E7TR from the GOT.

*2 For GT27, GT25 (except GT2505-V), GT23, or GS25 positioned at the end in the system configuration, set the terminating resistor to "Enable".
For GT2505-V, GT21, or GS21-W-N in the end position of the system configuration, set the terminating resistor to 330 Ω.
For GS21-W, since the terminating resistor is fixed to 330 Ω, no setting is required for the terminating resistor.
☞ Page 68 Terminating resistors of GOT

■RS-485 connection diagram 9)

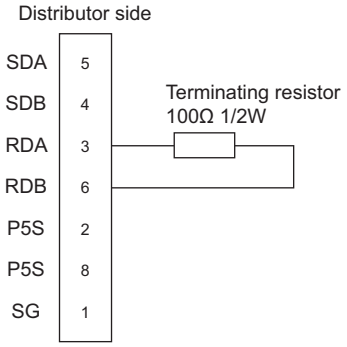

■RS-485 connection diagram 10)

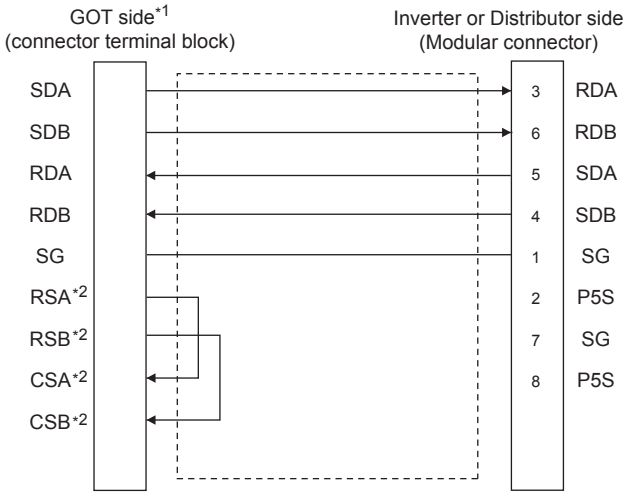

*1 Set the terminating resistor of the GOT side to "330Ω".
☞ Page 68 Terminating resistors of GOT

*2 The signals RSA, RSB, CSA, and CSB are not provided for GT2104-PMBD, GT2103-PMBD. Return connection is not required.

■RS-485 connection diagram 11)

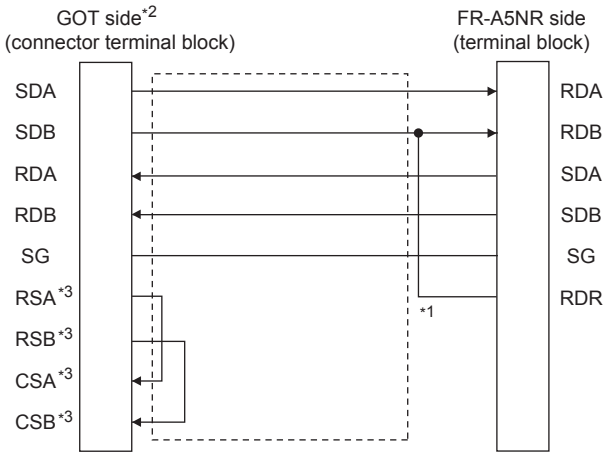

*1 Connect a terminating resistor jumper to RDB and RDR. The terminating resister jumper is packed together with the FR-A5NR.

*2 Set the terminating resistor of the GOT side to "330Ω".
☞ Page 68 Terminating resistors of GOT

*3 The signals RSA, RSB, CSA, and CSB are not provided for GT2104-PMBD, GT2103-PMBD. Return connection is not required.

■RS-485 connection diagram 12)

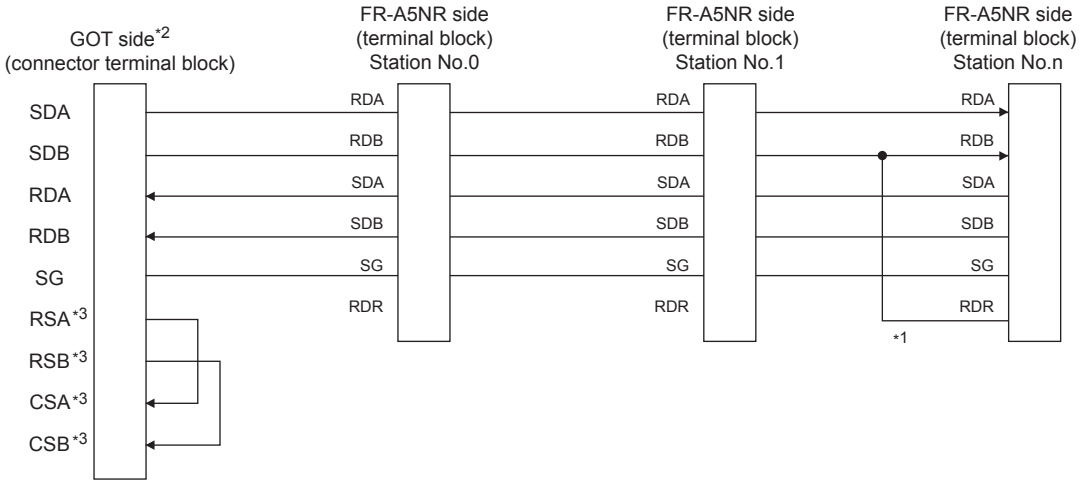

*1 Connect a terminating resistor jumper to RDB and RDR which are assigned in the FR-A5NR of the inverter located farthest from the GOT. The terminating resister jumper is packed together with the FR-A5NR.

*2 Set the terminating resistor of GOT side, which will be a terminal, to "330Ω".

☞ Page 68 Terminating resistors of GOT

*3 The signals RSA, RSB, CSA, and CSB are not provided for GT2104-PMBD, GT2103-PMBD. Return connection is not required.

■RS-485 connection diagram 13)

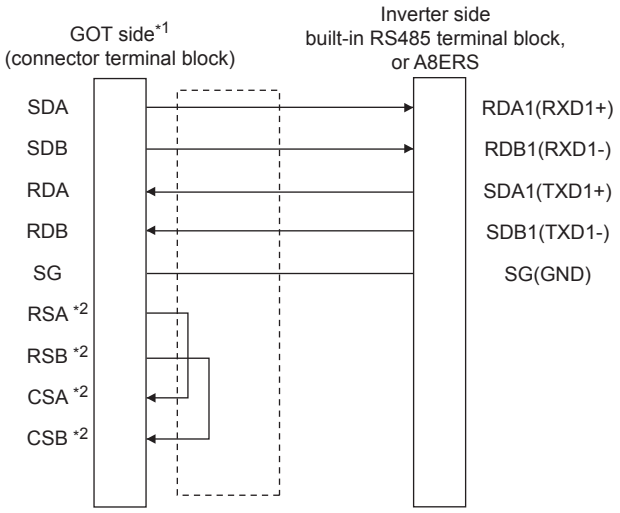

*1 Set the terminating resistor of the GOT side to "330Ω".

☞ Page 68 Terminating resistors of GOT

*2 The signals RSA, RSB, CSA, and CSB are not provided for GT2104-PMBD, GT2103-PMBD. Return connection is not required.

■RS-485 connection diagram 14)

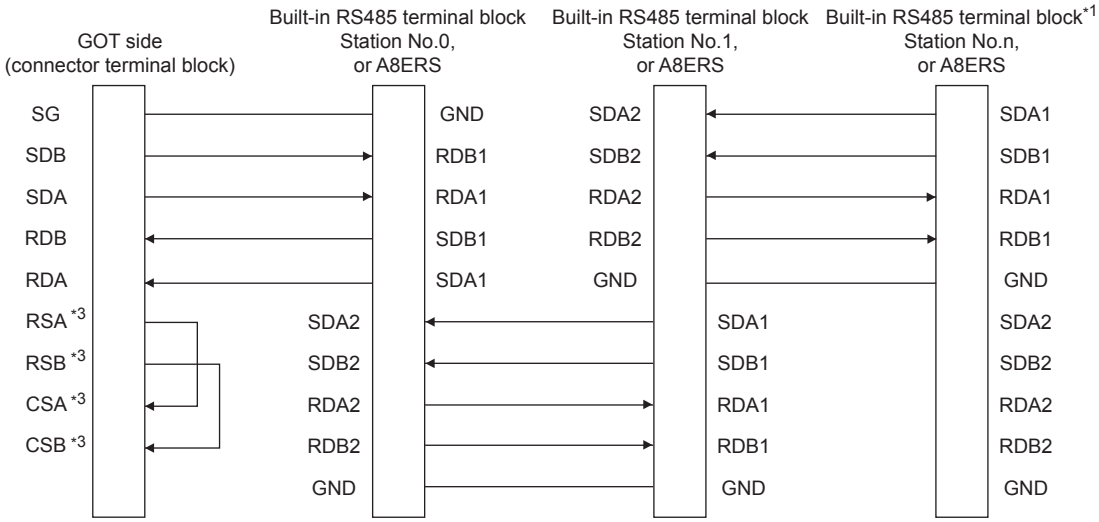

*1 Set the terminator switch built in the farthest inverter from the GOT to ON (100Ω).

*2 Set the terminating resistor of GOT side, which will be a terminal, to "330Ω".

☞ Page 68 Terminating resistors of GOT

*3 The signals RSA, RSB, CSA, and CSB are not provided for GT2104-PMBD, GT2103-PMBD. Return connection is not required.

■RS-485 connection diagram 15)

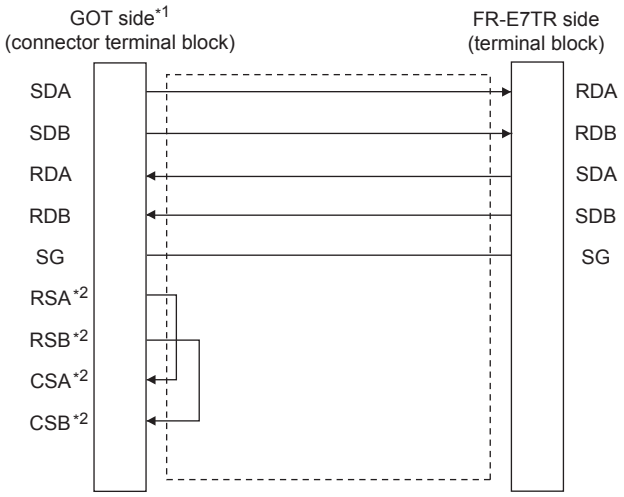

*1 Set the terminating resistor of the GOT side to "330Ω".

☞ Page 68 Terminating resistors of GOT

*2 The signals RSA, RSB, CSA, and CSB are not provided for GT2104-PMBD, GT2103-PMBD. Return connection is not required.

■RS-485 connection diagram 16)

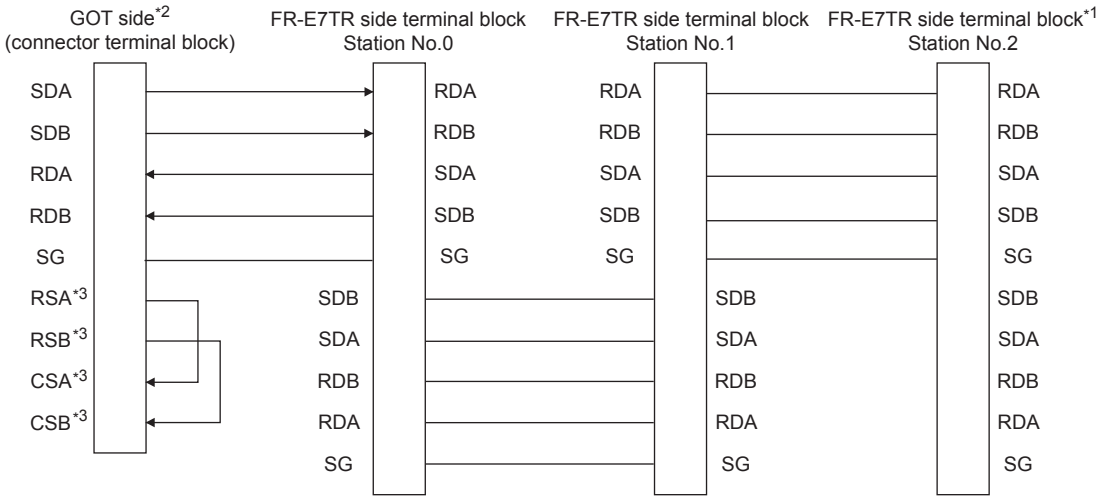

*1 Turn ON (100Ω) the terminator switch for the most distant FR-E7TR from the GOT.

*2 Set the terminating resistor of GOT side, which will be a terminal, to "330Ω".

☞ Page 68 Terminating resistors of GOT

*3 The signals RSA, RSB, CSA, and CSB are not provided for GT2104-PMBD, GT2103-PMBD. Return connection is not required.

Precautions when preparing a cable

■Cable length

The length of the RS-485 cable must be 500 m or less.

■GOT side connector

For the GOT side connector, refer to the following.

☞ Page 64 GOT connector specifications

■Inverter connector specifications

- Pin layout in the PU port

When seen from the front of the inverter
(receptacle side)

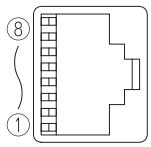

Modular jack

Pin No.	Signal name	Remark
1	GND (SG)	
2	(P5S)	Not used
3	RXD+ (RDA)	
4	TXD- (SDB)	
5	TXD+ (SDA)	
6	RXD- (RDB)	
7	GND (SG)	
8	(P5S)	Not used

The contents in the parentheses indicate symbols described in the inverter manual.

The pins number 2 and 8 (P5S) are connected to the power supply for an operation panel or a parameter unit.

Do not use them in RS-485 communication.

- Connector of cable between FREQROL Series inverters

Use the commercial connectors and cables shown in the table below or the comparable products.(Refer to the manual for the inverter.)

Name	Model name	Specifications	Manufacturer
Connector	5-554720-3	RJ45 connector	Tyco International, Ltd
Modular ceiling rosette (Distributor)	BMJ-8	-	HAKKO ELECTRIC CO.,LTD. TEL(03)-3806-9171
Cable	SGLPEV 0.5mm × 4P	Cable conforming to EIA568 (such as cable 10BASE-T)	MITSUBISHI CABLE INDUSTRIES, LTD.

■Terminal block layout in the FR-A5NR computer link option

Mount this option to the FR-A500(L), FR-F500(L), or FR-V500(L) series.

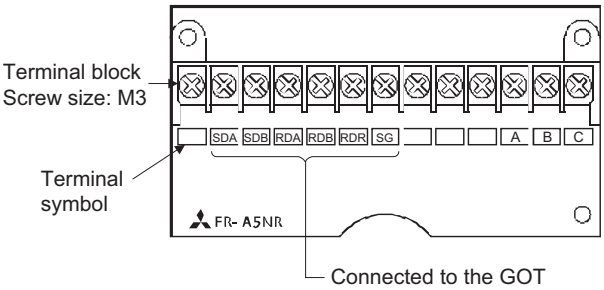

■Terminal block layout in the FR-E7TR control terminal option

Mount this option to the FR-E700 series or the sensorless servo (FR-E7□0EX).

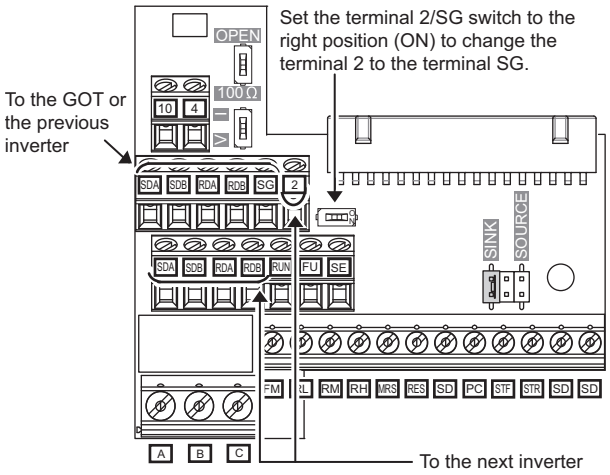

Connecting terminating resistors

■GOT side

When connecting a PLC to the GOT, a terminating resistor must be connected to the GOT.Set the terminating resistor setting switch.

For the procedure to set the terminating resistor, refer to the following.

☞ Page 68 Terminating resistors of GOT

GOT side settings

Setting communication interface (Controller Setting)

Set the channel of the connected equipment.

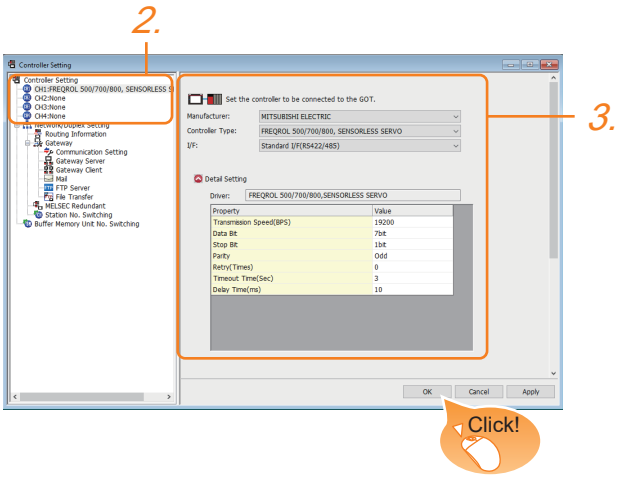

1. Select [Common] → [Controller Setting] from the menu.

2. In the [Controller Setting] window, select the channel No. to be used from the list menu.

3. Set the following items.

- [Manufacturer]: [MITSUBISHI ELECTRIC]
- [Controller Type]: Configure the setting according to the controller to be connected.
- [I/F]: Interface to be used
- [Detail Setting]: Configure the settings according to the usage environment.

☞ Page 876 Communication detail settings

4. When you have completed the settings, click the [OK] button.

Point

- When [Controller Type] is set to [FREQROL 800/E700NE(Batch monitor)]

The [Faults history] and [Batch monitor] functions of FR Configurator2 can be realized on GOT by creating the screens.

- Checking controller setting

The settings of connecting equipment can be confirmed in [I/F Communication Setting].

For details, refer to the following.

☞ Page 54 I/F communication setting

Communication detail settings

Make the settings according to the usage environment.

■FREQROL 500/700/800, SENSORLESS SERVO

Property	Value
Transmission Speed(BPS)	19200
Data Bit	7 bit
Stop Bit	1 bit
Parity	Odd
Retry(Times)	0
Timeout Time(Sec)	3
Delay Time(ms)	10

Item	Description	Range
Transmission Speed	Set this item when change the transmission speed used for communication with the connected equipment. (Default: 19200bps)	9600bps, 19200bps, 38400bps, 57600bps, 115200bps
Data Bit	Set this item when change the data length used for communication with the connected equipment. (Default: 7bits)	7bits/8bits
Stop Bit	Specify the stop bit length for communications. (Default: 1bit)	1bit/2bits
Parity	Specify whether or not to perform a parity check, and how it is performed during communication. (Default: Odd)	None Even Odd
Retry	Set the number of retries to be performed when a communication timeout occurs. (Default: 0time)	0 to 5times
Timeout Time	Set the time period for a communication to time out. (Default: 3sec)	1 to 30sec
Delay Time	Set this item to adjust the transmission timing of the communication request from the GOT. (Default: 10ms)	0 to 300ms

■FREQROL(Batch monitor), FREQROL 800

(For automatic connection)

Property	Value
Transmission Speed(BPS)	115200
Data Bit	8 bit
Stop Bit	1 bit
Parity	Odd
Retry(Times)	0
Timeout Time(Sec)	3
Host Address	0
Delay Time(ms)	10
Negotiation Time(Sec)	5
Initialization Wait Time(Sec)	3
Automatioc Negotiation	Yes

Item	Description	Range
Transmission Speed	Set this item when change the transmission speed used for communication with the connected equipment. (Default: 115200bps)	9600bps, 19200bps, 38400bps, 57600bps, 115200bps
Data Bit	Set this item when change the data length used for communication with the connected equipment. (Default: 8bits)	8bits
Stop Bit	Specify the stop bit length for communications. (Default: 1bit)	1bit
Parity	Specify whether or not to perform a parity check, and how it is performed during communication. (Default: Odd)	Odd
Retry	Set the number of retries to be performed when a communication timeout occurs. (Default: 0time)	0 to 5times
Timeout Time	Set the time period for a communication to time out. (Default: 3sec)	1 to 30sec
Host Address	Specify the station number of the inverter in the system configuration. (Default: 0)	0 to 31
Delay Time	Set this item to adjust the transmission timing of the communication request from the GOT. (Default: 10ms)	0 to 300ms
Negotiation Time	Set the time period that the GOT side communication setting is sent to the inverter. (Default: 5sec)	1 to 10sec
Initialization Wait Time	Set the wait time from when the communication setting is changed until when the communication starts. (Default: 3sec)	1 to 10sec
Automatioc Negotiation	Set whether to use the automatic connection. (Default: Yes)	Yes No

Point

• Communication interface setting by the Utility

The communication interface setting can be changed on the Utility's [Communication Settings] after writing [Controller Setting] of project data.

For details on the Utility, refer to the following manuals.

📖GOT2000 Series User's Manual (Utility)

• Precedence in communication settings

When settings are made by GT Designer3 or the Utility, the latest setting is effective.

• Cutting the portion of multiple connection of the controller

By setting GOT internal device, GOT can cut the portion of multiple connection of the controller.

For example, faulty station that has communication timeout can be cut from the system.

For details of the setting contents of GOT internal device, refer to the following manual.

📖GT Designer3 (GOT2000) Screen Design Manual

FREQROL series inverter side settings

For details on the inverter, refer to the manual of each series.

Point

When operating the inverter from the GOT
When operating the inverter from the GOT, set the parameter of the inverter side so that the GOT connection destination of the inverter side is set to the mode with the command right.
For details, refer to the following manual.
Manual for the inverter to be connected with GOT

Connecting to FR-S500(E) or FR-F500J series

Make the communication settings of the inverter.
Be sure to perform the inverter reset after updating each parameter.

■Communication port and corresponding parameters

GOT connection destination	Parameters corresponding to inverter
RS-485 port	Pr.79, n1 to n7, n10 to n12

■Communication settings of inverter

Set the following parameters using the PU (parameter unit). Set Pr.30 (Extended function selection) to 1 [With display] before making the parameter settings.
Do not change these parameters, even though they can be monitored from the GOT. If they are changed, communication with the GOT is disabled.

Setting item*1	Parameter No.*4	Set value	Contents of setting
Communication station number	n1 (331)	0 to 31	☞ Page 900 Station number setting
Communication speed*2	n2 (332)	192*3	19200bps
Stop bit length*2	n3 (333)	10	Data length: 7bit Stop bit length: 1bit
Parity check presence/absence*2	n4 (334)	1	Odd
Number of communication retries	n5 (335)	- (65535)	The inverter will not come to an alarm stop.
Communication check time interval	n6 (336)	-	Communication check suspension
Wait time setting	n7 (337)	0	0ms
CRLF selection	n11 (341)	1*3	With CR, without LF
Protocol selection*5	-	-	-
Operation mode selection	Pr.79	0*3	External operation mode at power on
Link start mode selection	n10 (340)	1	Computer link operation
E^2PROM write selection	n12 (342)	0*3	Written to RAM and EEPROM

*1 Setting items are the parameter names described in the FR-S500(E) and FR-F500J series manuals.
*2 Settings on the GOT can be changed.
When changing the settings on the GOT, be sure to change the parameters on the inverter to correspond with the GOT settings.
*3 Inverter default values (No need to change)
*4 When being monitored from the GOT, the parameter n1 through n7 correspond with Pr.331 through Pr.337, and the parameter n10 through n12 correspond with Pr.340 through Pr.342.
Numbers in brackets show the parameter number when the parameter unit is in use.
*5 There is no Protocol selection setting on the inverter side.

Connecting to FR-E500 series

Make the communication settings of the inverter.

Be sure to perform the inverter reset after updating each parameter.

■Communication port and corresponding parameters

GOT connection destination	Parameters corresponding to inverter
PU connector	Pr.79, Pr.117 to Pr.124, Pr.146, Pr.342

■Communication settings of inverter

Set the following parameters using the PU (parameter unit).

Do not change these parameters, even though they can be monitored from the GOT.If they are changed, communication with the GOT is disabled.

Setting item*1	Parameter No.	Set value	Contents of setting
Communication station number	Pr.117	0 to 31	☞ Page 900 Station number setting
Communication speed*2	Pr.118	192*3	19200bps
Stop bit length*2	Pr.119	10	Data length: 7bit Stop bit length: 1bit
Parity check presence/absence*2	Pr.120	1	Odd
Number of communication retries	Pr.121	9999 (65535)	The inverter will not come to an alarm stop.
Communication check time interval	Pr.122	9999	Communication check suspension
Wait time setting	Pr.123	0	0ms
CRLF presence/ absence selection	Pr.124	1*3	With CR, without LF
Protocol selection*4	-	-	-
Operation mode selection	Pr.79	1*3	PU operation mode
Communication startup mode selection*4	-	-	-
E2PROM write selection	Pr.342	0*3	Written to RAM and EEPROM
Frequency setting command selection*5	Pr.146	9999	Built-in frequency setting potentiometer invalid

*1 Setting items are the parameter names described in the FR-E500 series manuals.

*2 Settings on the GOT can be changed.
When changing the settings on the GOT, be sure to change the parameters on the inverter to correspond with the GOT settings.

*3 Inverter default values (No need to change)

*4 There is no Protocol selection setting on the inverter side.

*5 The setting is required for Frequency setting command selection.

Connecting to FR-F500(L) series

Make the communication settings of the inverter.

Be sure to perform the inverter reset after updating each parameter.

■Communication port and corresponding parameters

GOT connection destination	Parameters corresponding to inverter
PU connector	Pr.79, Pr.117 to Pr.124
FR-A5NR (Option unit)	Pr.79, Pr.331 to Pr.337, Pr.340 to Pr.342

■Communication settings of inverter

Set the following parameters using the PU (parameter unit). Set Pr.160 (user group read selection) to 0 [All parameters can be accessed for reading and writing.] before making the parameter settings.

Do not change these parameters, even though they can be monitored from the GOT. If they are changed, communication with the GOT is disabled.

Setting item*1	Parameter No.		Set value		Contents of setting
	PU connector	FR-A5NR			
Communication station number	Pr.117	Pr.331	0 to 31		☞ Page 900 Station number setting
Communication speed*2	Pr.118	Pr.332	192*4		19200bps
Stop bit length/data length Stop bit length*2	Pr.119	Pr.333	10		Data length: 7bit Stop bit length: 1bit
Parity check presence/absence*2	Pr.120	Pr.334	1		Odd
Number of communication retries	Pr.121	Pr.335	9999		The inverter will not come to an alarm stop.
Communication check time interval	Pr.122	Pr.336	9999		Communication check suspension
Wait time setting	Pr.123	Pr.337	0		0ms
CRLF presence/ absence selection	Pr.124	Pr.341	1*3		With CR, without LF
Protocol selection*5	-	-	-		-
Operation mode selection	Pr.79		PU connector	1	PU operation mode
			FR-A5NR	0*3	External operation mode at power on
Link start mode selection*6	-	Pr.340	1		Computer link operation
E2PROM write selection*6	-	Pr.342	0*3		Written to RAM and EEPROM

*1 Setting items are the parameter names described in the FR-F500(L) series and FR-A5NR manuals.

*2 Settings on the GOT can be changed.
When changing the settings on the GOT, be sure to change the parameters on the inverter to correspond with the GOT settings.

*3 Inverter default values (No need to change)

*4 Since the value has been set as a default, no setting is required when connecting to the PU connector on the inverter side.

*5 There is no Protocol selection setting on the inverter side.

*6 The setting is required on the inverter side when FR-A5NR is used.

Connecting to FR-A500(L) series

Make the communication settings of the inverter.

Be sure to perform the inverter reset after updating each parameter.

■Communication port and corresponding parameters

GOT connection destination	Parameters corresponding to inverter
PU connector	Pr.79, Pr.117 to Pr.124, Pr.342
FR-A5NR (Option unit)	Pr.79, Pr.331 to Pr.337, Pr.340 to Pr.342

■Communication settings of inverter

Set the following parameters using the PU (parameter unit). Do not change these parameters, even though they can be monitored from the GOT. If they are changed, communication with the GOT is disabled.

Setting item*1	Parameter No.		Set value		Contents of setting
	PU connector	FR-A5NR			
Communication station number	Pr.117	Pr.331	0 to 31		☞ Page 900 Station number setting
Communication speed*2	Pr.118	Pr.332	192*4		19200bps
Stop bit length*2	Pr.119	Pr.333	10		Data length: 7bit Stop bit length: 1bit
Parity check presence/absence*2	Pr.120	Pr.334	1		Odd
Number of communication retries	Pr.121	Pr.335	9999		The inverter will not come to an alarm stop.
Communication check time interval	Pr.122	Pr.336	9999		Communication check suspension
Wait time setting	Pr.123	Pr.337	0		0ms
CRLF presence/ absence selection	Pr.124	Pr.341	1*3		With CR, without LF
Protocol selection*5	-	-	-		-
Operation mode selection	Pr.79		PU connector	1	PU operation mode
			FR-A5NR	0*3	External operation mode at power on
Link start mode selection*6	-	Pr.340	1		Computer link operation
E2PROM write selection	Pr.342		0*3		Written to RAM and EEPROM

*1 Setting items are the parameter names described in the FR-A500(L) series and FR-A5NR manuals.
*2 Settings on the GOT can be changed.
When changing the settings on the GOT, be sure to change the parameters on the inverter to correspond with the GOT settings.
*3 Inverter default values (No need to change)
*4 Since the value has been set as a default, no setting is required when connecting to the PU connector on the inverter side.
*5 There is no Protocol selection setting on the inverter side.
*6 The setting is required on the inverter side when FR-A5NR is used.

Connecting to FR-V500(L) series

Make the communication settings of the inverter.

Be sure to perform the inverter reset after updating each parameter.

■Communication port and corresponding parameters

GOT connection destination	Parameters corresponding to inverter
PU connector	Pr.79, Pr.117 to Pr.124, Pr.342
FR-A5NR (Option unit)	Pr.79, Pr.331 to Pr.337, Pr.340 to Pr.342

■Communication settings of inverter

Set the following parameters using the PU (parameter unit). Set Pr.160 (Extended function display selection) to 1 [All parameters can be accessed for reading and writing.] before making the parameter settings.

Do not change these parameters, even though they can be monitored from the GOT. If they are changed, communication with the GOT is disabled.

Setting item*1	Parameter No.		Set value		Contents of setting
	PU connector	FR-A5NR			
Communication station number	Pr.117	Pr.331	0 to 31		☞ Page 900 Station number setting
Communication speed*2	Pr.118	Pr.332	192*4		19200bps
Stop bit length/data length Stop bit length*2	Pr.119	Pr.333	10		Data length: 7bit Stop bit length: 1bit
Parity check presence/absence*2	Pr.120	Pr.334	1		Odd
Number of communication retries	Pr.121	Pr.335	9999		The inverter will not come to an alarm stop.
Communication check time interval	Pr.122	Pr.336	9999		Communication check suspension
Wait time setting	Pr.123	Pr.337	0		0ms
CRLF presence/ absence selection	Pr.124	Pr.341	1*3		With CR, without LF
Protocol selection*5	-	-	-		-
Operation mode selection	Pr.79		PU connector	1	PU operation mode
			FR-A5NR	0*3	External operation mode at power on
Link start mode selection*6	-	Pr.340	1		Computer link operation
E2PROM write selection	Pr.342		0*3		Written to RAM and EEPROM

*1 Setting items are the parameter names described in the FR-V500(L) series and FR-A5NR manuals.

*2 Settings on the GOT can be changed.
When changing the settings on the GOT, be sure to change the parameters on the inverter to correspond with the GOT settings.

*3 Inverter default values (No need to change)

*4 Since the value has been set as a default, no setting is required when connecting to the PU connector on the inverter side.

*5 There is no Protocol selection setting on the inverter side.

*6 The setting is required on the inverter side when FR-A5NR is used.

Connecting to FR-E700 series

Make the communication settings of the inverter.

Be sure to perform the inverter reset after updating each parameter.

■Communication port and corresponding parameters

GOT connection destination	Parameters corresponding to inverter
PU connector	Pr.79, Pr.117 to Pr.124, Pr.340, Pr.342, Pr.549
FR-E7TR (RS-485 terminal block)	

■Communication settings of inverter

Set the following parameters using the PU (parameter unit).

Do not change these parameters, even though they can be monitored from the GOT. If they are changed, communication with the GOT is disabled.

Setting item*1	Parameter No.	Set value	Contents of setting
PU communication station number	Pr.117	0 to 31	☞ Page 900 Station number setting
PU communication speed*2	Pr.118	192*3	19200bps
PU communication stop bit length*2	Pr.119	10	Data length: 7bit Stop bit length: 1bit
PU communication parity check*2	Pr.120	1	Odd
Number of PU communication retries	Pr.121	9999	The inverter will not come to an alarm stop.
PU communication check time interval	Pr.122	9999	Communication check suspension
PU communication wait time setting	Pr.123	0	0ms
PU communication CR/LF selection	Pr.124	1*3	With CR, without LF
Protocol selection	Pr.549	0*3	Mitsubishi Electric inverter protocol
Operation mode selection	Pr.79	0*3	PU operation mode
Communication startup mode selection	Pr.340	1	Network operation mode.
Communication EEPROM write selection	Pr.342	0*3	Written to RAM and EEPROM

*1 Setting items are the parameter names described in the FR-E700 series manuals.

*2 Settings on the GOT can be changed.
When changing the settings on the GOT, be sure to change the parameters on the inverter to correspond with the GOT settings.

*3 Inverter default values (No need to change)

Connecting to FR-D700 series

Make the communication settings of the inverter.

Be sure to perform the inverter reset after updating each parameter.

■Communication port and corresponding parameters

GOT connection destination	Parameters corresponding to inverter
PU connector	Pr.79, Pr.117 to Pr.124, Pr.340, Pr.342, Pr.549

■Communication settings of inverter

Set the following parameters using the PU (parameter unit). Before setting the parameters, set Pr.160 (User group read selection) to 0 so that simple mode + extended mode parameters are displayed.

Do not change these parameters, even though they can be monitored from the GOT. If they are changed, communication with the GOT is disabled.

Setting item*1	Parameter No.	Set value	Contents of setting
PU communication station number	Pr.117	0 to 31	☞ Page 900 Station number setting
PU communication speed*2	Pr.118	192*3	19200bps
PU communication stop bit length*2	Pr.119	10	Data length: 7bit Stop bit length: 1bit
PU communication parity check*2	Pr.120	1	Odd
Number of PU communication retries	Pr.121	9999	The inverter will not come to an alarm stop.
PU communication check time interval	Pr.122	9999	Communication check suspension
PU communication wait time setting	Pr.123	0	0ms
PU communication CR/LF selection	Pr.124	1*3	With CR, without LF
Protocol selection	Pr.549	0*3	Mitsubishi Electric inverter protocol
Operation mode selection	Pr.79	0*3	PU operation mode
Communication startup mode selection	Pr.340	1	Network operation mode.
Communication EEPROM write selection	Pr.342	0*3	Written to RAM and EEPROM

*1 Setting items are the parameter names described in the FR-D700 series manuals.

*2 Settings on the GOT can be changed.
When changing the settings on the GOT, be sure to change the parameters on the inverter to correspond with the GOT settings.

*3 Inverter default values (No need to change)

Connecting to FR-F700 or FR-F700P series

Make the communication settings of the inverter.

Be sure to perform the inverter reset after updating each parameter.

■Communication port and corresponding parameters

GOT connection destination	Parameters corresponding to inverter
PU connector	Pr.79, Pr.117 to Pr.124, Pr.340, Pr.342
RS-485 terminal	Pr.79, Pr.331 to Pr.337, Pr.340 to Pr.342, Pr.549

■Communication settings of inverter

Set the following parameters using the PU (parameter unit). Before setting the parameters, set Pr.160 (User group read selection) to 0 so that simple mode + extended mode parameters are displayed.

Do not change these parameters, even though they can be monitored from the GOT. If they are changed, communication with the GOT is disabled.

Setting item*1	Parameter No.		Set value		Contents of setting
	PU connector	RS-485			
PU communication station number/RS-485 communication station number	Pr.117	Pr.331	0 to 31		☞ Page 900 Station number setting
PU communication speed/RS-485 communication speed*2	Pr.118	Pr.332	192*4		19200bps
PU communication stop bit length/ RS-485 communication stop bit length*2	Pr.119	Pr.333	10		Data length: 7bit Stop bit length: 1bit
PU communication parity check/ RS-485 communication parity check*2	Pr.120	Pr.334	1		Odd
Number of PU communication retries/ RS-485 communication retry count	Pr.121	Pr.335	9999		The inverter will not come to an alarm stop.
PU communication check time interval/ RS-485 communication check time interval	Pr.122	Pr.336	9999*4		Communication check suspension
PU communication waiting time setting/ RS-485 communication waiting time setting	Pr.123	Pr.337	0		0ms
PU communication CR/LF selection/ RS-485 communication CR/LF selection	Pr.124	Pr.341	1*3		With CR, without LF
Protocol selection	-	Pr.549	0*3		Mitsubishi Electric inverter protocol
Operation mode selection	Pr.79		PU connector	1	PU operation mode
			RS-485	0*3	External operation mode at power on
Communication startup mode selection	Pr.340		PU connector	0*3	Refer to Pr.79 settings.
			RS-485	1	Network operation mode.
Communication EEPROM write selection	Pr.342		0*3		Written to RAM and EEPROM

*1 Setting items are the parameter names described in the FR-F700 and FR-F700P series manuals.

*2 Settings on the GOT can be changed.
When changing the settings on the GOT, be sure to change the parameters on the inverter to correspond with the GOT settings.

*3 Inverter default values (No need to change)

*4 Since the value has been set as a default, no setting is required when connecting to the PU connector on the inverter side.

Point

Automatic setting with Pr.999 (FR-F700P series only)

If Pr.999 is set as the following, the communication settings other than [PU communication station number] and [Communication EEPROM write selection] can be automatically set in a batch to the default communication settings of the GOT side.

Parameter No.	Set value	Description	Operation in parameter setting mode
Pr.999*1	10	GOT Initial settings (PU connector)	[AUTO]→[GOT]→[1]Write
	11	GOTInitial settings (RS-485 terminal)	-

*1 When monitoring the value of Pr.999, 9999 is always monitored.

Connecting to FR-F700PJ series

Make the communication settings of the inverter.

Be sure to perform the inverter reset after updating each parameter.

■Communication port and corresponding parameters

GOT connection destination	Parameters corresponding to inverter
PU connector	Pr.79, Pr.117 to Pr.124, Pr.340, Pr.342, Pr.549

■Communication settings of inverter

Set the following parameters using the PU (parameter unit). Before setting the parameters, set Pr.160 (Extended function display selection) to 0 so that simple mode + extended mode parameters are displayed.

Do not change these parameters, even though they can be monitored from the GOT. If they are changed, communication with the GOT is disabled.

Setting item*1	Parameter No.	Set value	Contents of setting
PU communication station number	Pr.117	0 to 31	☞ Page 900 Station number setting
PU communication speed*2	Pr.118	192*3	19200bps
PU communication stop bit length	Pr.119	10	Data length: 7bit Stop bit length: 1bit
PU communication parity check*2	Pr.120	1	Odd
Number of PU communication retries	Pr.121	9999	The inverter will not come to an alarm stop.
PU communication check time interval	Pr.122	9999	Communication check suspension
PU communication waiting time setting	Pr.123	0	0ms
PU communication CR/LF selection	Pr.124	1*3	With CR, without LF
Protocol selection	Pr.549	0*3	Mitsubishi Electric inverter protocol
Operation mode selection	Pr.79	0*3	External operation mode at power on
Communication startup mode selection	Pr.340	1	Network operation mode.
Communication EEPROM write selection	Pr.342	0*3	Written to RAM and EEPROM

*1 Setting items are the parameter names described in the FR-F700PJ series manuals.
*2 Settings on the GOT can be changed.
When changing the settings on the GOT, be sure to change the parameters on the inverter to correspond with the GOT settings.
*3 Inverter default values (No need to change)

Point

Automatic setting with Pr.999

If Pr.999 is set as the following, the communication settings other than [PU communication station number] and [Communication EEPROM write selection] can be automatically set in a batch to the default communication settings of the GOT side.

Parameter No.	Set value	Description	Operation in parameter setting mode
Pr.999*1	10	GOT Initial settings (PU connector)	[AUTO] → [GOT] → [1]Write

*1 When monitoring the value of Pr.999, 9999 is always monitored.

Connecting to FR-A700 series

Make the communication settings of the inverter.

Be sure to perform the inverter reset after updating each parameter.

■Communication port and corresponding parameters

GOT connection destination	Parameters corresponding to inverter
PU connector	Pr.79, Pr.117 to Pr.124, Pr.340, Pr.342
RS-485 terminal	Pr.79, Pr.331 to Pr.337, Pr.340 to Pr.342, Pr.549

■Communication settings of inverter

Set the following parameters using the PU (parameter unit).

Do not change these parameters, even though they can be monitored from the GOT. If they are changed, communication with the GOT is disabled.

Setting item*1	Parameter No.		Set value		Contents of setting
	PU connector	RS-485			
PU communication station number/ RS-485 communication station number	Pr.117	Pr.331	0 to 31		☞ Page 900 Station number setting
PU communication speed/ RS-485 communication speed*2	Pr.118	Pr.332	192*4		19200bps
PU communication stop bit length/ RS-485 communication stop bit length*2	Pr.119	Pr.333	10		Data length: 7bit Stop bit length: 1bit
PU communication parity check/ RS-485 communication parity check*2	Pr.120	Pr.334	1		Odd
Number of PU communication retries/ RS-485 communication retry count	Pr.121	Pr.335	9999		The inverter will not come to an alarm stop.
PU communication check time interval/ RS-485 communication check time interval	Pr.122	Pr.336	9999*4		Communication check suspension
PU communication waiting time setting/ RS-485 communication waiting time setting	Pr.123	Pr.337	0		0ms
PU communication CR/LF selection/ RS-485 communication CR/LF selection	Pr.124	Pr.341	1*3		With CR, without LF
Protocol selection	-	Pr.549	0*3		Mitsubishi Electric inverter protocol
Operation mode selection	Pr.79		PU connector	1	PU operation mode
			RS-485	0*3	External operation mode at power on
Communication startup mode selection	Pr.340		PU connector	0*3	Refer to Pr.79 settings.
			RS-485	1	Network operation mode.
Communication EEPROM write selection	Pr.342		0*3		Written to RAM and EEPROM

*1 Setting items are the parameter names described in the FR-A700 series manuals.

*2 Settings on the GOT can be changed.
When changing the settings on the GOT, be sure to change the parameters on the inverter to correspond with the GOT settings.

*3 Inverter default values (No need to change)

*4 Since the value has been set as a default, no setting is required when connecting to the PU connector on the inverter side.

Point

• Automatic setting with Pr.999

If Pr.999 is set as the following, the communication settings other than [PU communication station number] and [Communication EEPROM write selection] can be automatically set in a batch to the default communication settings of the GOT side.

Parameter No.	Set value	Description	Operation in parameter setting mode
Pr.999*1	10	GOT Initial settings (PU connector)	[AUTO] → [GOT] → [1]Write
	11	GOT Initial settings (RS-485)	-

*1 When monitoring the value of Pr.999, 9999 is always monitored.

• Inverters available for automatic batch setting

Parameters are not automatically set in a batch depending on the SERIAL (production number) symbol of the inverter to be used. For details, contact your local distributor.

Connecting to FR-A800, FR-A800 Plus, or FR-F800 series

Configure the inverter communication settings by one of the following three methods.

To automatically reconfigure the GOT side communication settings to the inverter side communication settings in batches and to perform the automatic connection, refer to the following.

☞ Page 889 Communication settings of inverter (Automatic connection)

To automatically reconfigure the GOT side default communication settings to the inverter side communication settings in batches, refer to the following.

☞ Page 890 Automatic setting with Pr.999

To manually reconfigure the GOT side communication settings to the inverter communication settings, refer to the following.

☞ Page 891 Communication settings of inverter (Manual setting)

Be sure to perform the inverter reset after updating each parameter.

■Communication port and corresponding parameters

GOT connection destination	Parameters corresponding to inverter
PU connector	Pr.79, Pr.117 to Pr.124, Pr.340, Pr.342, Pr.414
RS-485 terminal	Pr.79, Pr.331 to Pr.337, Pr.340 to Pr.342, Pr.414, Pr.549

■Communication settings of inverter (Automatic connection)

When [Automatic Negotiation] is set to [Yes] in the GOT communication settings, the inverter parameters are reconfigured to the GOT communication settings.

Set the following parameters before the automatic connection.

Setting item	Parameter No.		Setting range	Contents of setting
	PU connector	RS-485		
PU communication station number/RS-485 communication station number	Pr.117	Pr.331	0 to 31	☞ Page 900 Station number setting
PLC function operation selection	Pr.414		0 to 2	0: Disable PLC function 1 or 2: Enable PLC function
Protocol selection	-	Pr.549	0, 1	0: Mitsubishi Electric inverter protocol 1: MODBUS RTU protocol

The following shows the parameters to be reconfigured by the automatic connection.

Setting item	Parameter No.	
	PU connector	RS-485
PU communication speed/RS-485 communication speed	Pr.118	Pr.332
PU communication stop bit length/RS-485 communication stop bit length	Pr.119	Pr.333
PU communication parity check/RS-485 communication parity check	Pr.120	Pr.334
Number of PU communication retries/RS-485 communication retry count	Pr.121	Pr.335
PU communication check time interval/RS-485 communication check time interval	Pr.122	Pr.336
PU communication waiting time setting/RS-485 communication waiting time setting	Pr.123	Pr.337
PU communication CR/LF selection/RS-485 communication CR/LF selection	Pr.124	Pr.341

Before performing the automatic connection, connect all the GOTs and the inverters.

After the automatic connection is performed, if a station is added or changed, or the communication settings are not reconfigured normally, change the settings with the automatic batch parameter setting (Pr.999) separately.

If the inverter power turns off while the automatic connection is executed, execute the automatic connection on the GOT again.

If the automatic connection fails, a communication timeout error occurs.

If the automatic connection succeeds, the GOT normally starts communicating with each station.

■Automatic setting with Pr.999

Setting Pr.999 as shown below automatically configures the communication settings to the default communication settings of the GOT side collectively.

Parameter No.	Set value	Description	Operation in parameter setting mode
Pr.999*1	10	GOT (FREQROL 500/700/800, SENSORLESS SERVO) initial settings (PU connector)	[AUTO] → [GOT] → [1]Write
	11	GOT (FREQROL 500/700/800, SENSORLESS SERVO) initial settings (RS-485)	-
	12	GOT (FREQROL 800) initial settings (PU connector)	[AUTO] → [GOT] → [2]Write
	13	GOT (FREQROL 800) initial settings (RS-485)	-

*1 When monitoring the value of Pr.999, 9999 is always monitored.

The following shows the values to be automatically set in batches when the above values are set for Pr.999.

- Pr.999=10

Pr.No.	Setting item	Set value
79	Operation mode selection	1
118	PU communication speed	192
119	PU communication stop bit length	10
120	PU communication parity check	1
121	Number of PU communication retries	9999
122	PU communication check time interval	9999
123	PU communication waiting time setting	0ms
124	PU communication CR/LF selection	1
340	Communication startup mode selection	0

- Pr.999=11

Pr.No.	Setting item	Set value
79	Operation mode selection	0
332	RS-485 communication speed	192
333	RS-485 communication stop bit length	10
334	RS-485 communication parity check	1
335	RS-485 communication retry count	9999
336	RS-485 communication check time interval	9999
337	RS-485 communication waiting time setting	0ms
340	Communication startup mode selection	1
341	RS-485 communication CR/LF selection	1
549	Protocol selection	0

- Pr.999=12

Pr.No.	Setting item	Set value
79	Operation mode selection	1
118	PU communication speed	1152
119	PU communication stop bit length	0
120	PU communication parity check	1
121	Number of PU communication retries	9999
122	PU communication check time interval	9999
123	PU communication waiting time setting	0ms
124	PU communication CR/LF selection	1
340	Communication startup mode selection	0
414	PLC function operation selection	2*1

*1 Before configuring the automatic batch setting, if Pr.414 is set to 1, the setting is not changed.

• Pr.999=13

Pr.No.	Setting item	Set value
79	Operation mode selection	0
332	RS-485 communication speed	1152
333	RS-485 communication stop bit length	0
334	RS-485 communication parity check	1
335	RS-485 communication retry count	9999
336	RS-485 communication check time interval	9999
337	RS-485 communication waiting time setting	0ms
340	Communication startup mode selection	1
341	RS-485 communication CR/LF selection	1
414	PLC function operation selection	2*1
549	Protocol selection	0

*1 Before configuring the automatic batch setting, if Pr.414 is set to 1, the setting is not changed.

■Communication settings of inverter (Manual setting)

Set the following parameters using the PU (operation panel or parameter unit). Before setting the parameters, set Pr.160 (User group read selection) to 0 so that simple mode + extended parameters are displayed.

Do not change these parameters, even though they can be monitored from the GOT. If they are changed, communication with the GOT is disabled.

Setting item*1	Parameter No.		Set value		Contents of setting
	PU connector	RS-485			
PU communication station number/ RS-485 communication station number	Pr.117	Pr.331	0 to 31		☞ Page 900 Station number setting
PU communication speed/ RS-485 communication speed*2	Pr.118	Pr.332	192*3		19200bps
PU communication stop bit length/data length/ RS-485 communication stop bit length/data length*2	Pr.119	Pr.333	10*4		Data length: 7bit Stop bit length: 1bit
PU communication parity check/ RS-485 communication parity check*2	Pr.120	Pr.334	1		Odd
Number of PU communication retries/ RS-485 communication retry count	Pr.121	Pr.335	9999		The inverter will not come to an alarm stop.
PU communication check time interval/ RS-485 communication check time interval	Pr.122	Pr.336	9999*3		Communication check suspension
PU communication waiting time setting/ RS-485 communication waiting time setting	Pr.123	Pr.337	0		0ms
PU communication CR/LF selection/ RS-485 communication CR/LF selection	Pr.124	Pr.341	1*5		With CR, without LF
Protocol selection	-	Pr.549	0*5		Mitsubishi Electric inverter protocol
Operation mode selection	Pr.79		PU connector	1	PU operation mode
			RS-485	0*5	External operation mode at power on
Communication startup mode selection	Pr.340		PU connector	0*5	Refer to Pr.79 settings.
			RS-485	1	Network operation mode.
Communication EEPROM write selection	Pr.342		0*5		Written to RAM and EEPROM
PLC function operation selection*6	Pr.414		1, 2		Enabled with 1 and 2.

*1 Setting items are the parameter names described in the FR-A800 and FR-F800 series manuals.
*2 Settings on the GOT can be changed.
When changing the settings on the GOT, be sure to change the parameters on the inverter to correspond with the GOT settings.
*3 Since the value has been set as a default, no setting is required when connecting to the PU connector on the inverter side.
*4 To use [FR 800 driver], set 0.
*5 Inverter default values (No need to change).
*6 The inverter side setting defaults to 0 (invalid).
To use the PLC function, set 1 or 2.

■Parameters for monitoring data specific to FR-A800 Plus series

• How to monitor the winding length (upper + lower) (PV29)

Set Pr.645 (Winding diameter storage selection) to [1], and set Pr.1263 (Stored winding length (lower 4 digits)) and Pr.1298 (Stored winding length (upper 4 digits)) on the inverter side.

Communication drivers of FREQROL (Batch monitor) that supports monitoring PV are the setting target.

Setting item *1	Parameter No.	Setting range	Description
Winding diameter storage selection	Pr.645	0, 1	Select whether to store the winding diameter and winding length. 0: Do not store. 1: Stores the current winding diameter.
Stored winding diameter	Pr.646	1 to 6553 mm	The stored winding diameter can be read/written.
Operation time with stored winding diameter	Pr.647	0 to 100 s	Set the time to hold the stored winding diameter after the start signal turns on.
Target winding diameter	Pr.648	1 to 6563 mm	Set the winding diameter to output the Target winding diameter achieved signal (Y233).
Winding length increment	Pr.1262	0	1km
		1	100m
		2	10m
		3	1m
		4	1cm
		5	1mm
Stored winding length (lower 4 digits)	Pr.1263	0 to 9999 m*2	The stored winding length (lower 4 digits) can be read/written.
Winding length detection (lower 4 digits)	Pr.1264	0 to 9999 m*2	Set the winding length (lower 4 digits) to output the Winding/unwinding completion signal (Y234).
Stored winding length (upper 4 digits)	Pr.1298	0 to 9999 m*2	The stored winding length (upper 4 digits) can be read/written.
Stored winding length increment	Pr.1299	0	1m
		1	1cm
		2	1mm
Winding length detection (upper 4 digits)	Pr.1346	0 to 9999 m*2	Set the winding length (lower 4 digits) to output the Winding/unwinding completion signal (Y234).

*1 The parameter names described in the FR-A800 Plus series manuals

*2 The unit differs depending on the setting of Pr.1262.

• How to monitor the actual line speed (PV27)

The actual line speed can be set with the input value of the line speed command by setting Pr.362 (Actual line speed input selection) to [0].

For the line speed command, a value can be set in Pr.360 by setting Pr.361 (Line speed command input selection) to [8].

Communication drivers of FREQROL (Batch monitor) that supports monitoring PV are the setting target.

Setting item *1	Parameter No.	Setting range	Description
Line speed command voltage/current bias	Pr.350	0 to 100%	Set the converted value (%) of the bias voltage (current) for analog input.
Line speed command bias	Pr.351	0 to 6553.4 m/min *2	Set the bias line speed command value for analog input.
Line speed command voltage/current gain	Pr.352	0 to 100%	Set the converted value (%) of the gain voltage (current) for analog input.
Line speed command gain	Pr.353	0 to 6553.4 m/min *2 9999	Set the gain line speed command value for analog input.
Line speed command pulse input bias	Pr.354	0 to 500k pulses/s	Set the number of bias input pulses for pulse train input.
Line speed command pulse input gain	Pr.355	0 to 500k pulses/s	Set the number of gain input pulses for pulse train input.
Line speed command digital input bias	Pr.356	0 to 65535	Set the bias line speed command value for pulse train input.
Line speed command digital input gain	Pr.357	0 to 65535	Set the gain line speed command value for pulse train input.
Line speed unit	Pr.358	0	m/min
		1	m/sec
		2	mm/min
		3	mm/sec
Line speed command value	Pr.360	0 to 6553.4 m/min *2	Set the line speed command value.
Line speed command input selection	Pr.361	0	According to the priority of the speed command rights
		1	Terminal JOG single-phase pulse train input
		2	FR-A8AP/FR-A8AL/FR-A8TP encoder pulse train input
		3	Terminal 2 (0 to 100%)
		4	Terminal 4 (20 to 100%)
		5	Terminal 1 (-100 to 100%)
		6	Terminal 6 (FR-A8AZ) (-100 to 100%)
		7	FR-A8AL single-phase pulse train input
		8	Line speed command according to the setting of Pr.360 (Line speed command value)
		9999	No function
Actual line speed input selection	Pr.362	0 (Default)	V* (line speed command)
		1	Terminal JOG single-phase pulse train input
		2	FR-A8AP/FR-A8AL/FR-A8TP encoder pulse train input (complementary 12 V / differential 5 V (A-, B-phases)) *3
		3	Terminal 2 (analog value: 0 to 100%) (0 to 5 V DC) *4
		4	Terminal 4 (analog value: 20 to 100%) (4 to 20 mA DC) *4
		5	Terminal 1 (analog value: -100 to 100%) (0 to ±10 V DC) *4
		6	Terminal 6 (FR-A8AZ) (analog value: -100 to 100%) (0 to ±10 V DC) *4
		7	FR-A8AL single-phase pulse train input (PP, NP)
		9999	No function *5
Command pulse selection	Pr.428	0	Forward/Reverse pulse train (negative logic)
		1	Pulse train + rotation direction sign (negative logic)
		2	A/B-phase pulse train (negative logic)
		3	Forward/Reverse pulse train (positive logic)
		4	Pulse train + rotation direction sign (positive logic)
		5	A/B-phase pulse train (positive logic)
Start line speed command	Pr.622	0 to 6553.4 m/min *2	Set the line speed command to start operation.
Line multi-speed setting (high-speed)	Pr.1265	0 to 6553.4 m/min *2	Set the line speed command value when the RH signal is ON.

Setting item *1	Parameter No.	Setting range	Description
Line multi-speed setting (middle-speed)	Pr.1266	0 to 6553.4 m/min *2	Set the line speed command value when the RM signal is ON.
Line multi-speed setting (low-speed)	Pr.1267	0 to 6553.4 m/min *2	Set the line speed command value when the RL signal is ON.
Line multi-speed setting (speed 4)	Pr.1268	0 to 6553.4 m/min *2	The line speed from 4th speed to 15th speed can be set according to the combination of the RH, RM, RL and REX signals.
Line multi-speed setting (speed 5)	Pr.1269	0 to 6553.4 m/min *2	
Line multi-speed setting (speed 6)	Pr.1270	0 to 6553.4 m/min *2	
Line multi-speed setting (speed 7)	Pr.1271	0 to 6553.4 m/min *2	
Line multi-speed setting (speed 8)	Pr.1272	0 to 6553.4 m/min *2	
Line multi-speed setting (speed 9)	Pr.1273	0 to 6553.4 m/min *2	
Line multi-speed setting (speed 10)	Pr.1274	0 to 6553.4 m/min *2	
Line multi-speed setting (speed 11)	Pr.1275	0 to 6553.4 m/min *2	
Line multi-speed setting (speed 12)	Pr.1276	0 to 6553.4 m/min *2	
Line multi-speed setting (speed 13)	Pr.1277	0 to 6553.4 m/min *2	
Line multi-speed setting (speed 14)	Pr.1278	0 to 6553.4 m/min *2	
Line multi-speed setting (speed 15)	Pr.1279	0 to 6553.4 m/min *2	

*1 The parameter names described in the FR-A800 Plus series manuals
*2 The unit differs depending on the setting of Pr.358.
*3 When Pr.362 is set to [2], select the option to input the actual line speed with Pr.862.
*4 The input specification in the initial setting is indicated.
*5 When Pr.362 is set to [9999] (No function), the actual line speed is regarded as 0.

Connecting to FR-E800 series

Configure the inverter communication settings by one of the following three methods.

To automatically reconfigure the GOT side communication settings to the inverter side communication settings in batches and to perform the automatic connection, refer to the following.

☞ Page 895 Communication settings of inverter (Automatic connection)

To automatically reconfigure the GOT side default communication settings to the inverter side communication settings in batches, refer to the following.

☞ Page 896 Automatic setting with Pr.999

To manually reconfigure the GOT side communication settings to the inverter communication settings, refer to the following.

☞ Page 897 Communication settings of inverter (Manual setting)

Be sure to perform the inverter reset after updating each parameter.

■Communication port and corresponding parameters

GOT connection destination	Parameters corresponding to inverter
PU connector	Pr.79, Pr.117 to Pr.124, Pr.340, Pr.342, Pr.414, Pr.549

■Communication settings of inverter (Automatic connection)

When [Automatic Negotiation] is set to [Yes] in the GOT communication settings, the inverter parameters are reconfigured to the GOT communication settings.

Set the following parameters before the automatic connection.

Setting item	Parameter No.	Setting range	Contents of setting
PU communication station number	Pr.117	0 to 31	☞ Page 900 Station number setting
PLC function operation selection	Pr.414	0 to 2	0: Disable PLC function 1 or 2: Enable PLC function
Protocol selection	Pr.549	0, 1	0: Mitsubishi Electric inverter (computer link) protocol 1: MODBUS RTU protocol

The following shows the parameters to be reconfigured by the automatic connection.

Setting item	Parameter No.
PU communication speed	Pr.118
PU communication stop bit length/data length	Pr.119
PU communication parity check	Pr.120
Number of PU communication retries	Pr.121
PU communication check time interval	Pr.122
PU communication waiting time setting	Pr.123
PU communication CR/LF selection	Pr.124

Before performing the automatic connection, connect all the GOTs and the inverters.

After the automatic connection is performed, if a station is added or changed, or the communication settings are not reconfigured normally, change the settings with the automatic batch parameter setting (Pr.999) separately.

If the inverter power turns off while the automatic connection is executed, execute the automatic connection on the GOT again.

If the automatic connection fails, a communication timeout error occurs.

If the automatic connection succeeds, the GOT normally starts communicating with each station.

■Automatic setting with Pr.999

Setting Pr.999 as shown below automatically configures the communication settings to the default communication settings of the GOT side collectively.

Parameter No.	Set value	Description	Operation in parameter setting mode
Pr.999 *1	10	GOT ([FREQROL 500/700/800, SENSORLESS SERVO]) initial settings	[AUTO] → [GOT] → [1]Write
	12	GOT ([FREQROL 800], [FREQROL(Batch monitor)]) initial settings	[AUTO] → [GOT] → [2]Write

*1 When monitoring the value of Pr.999, 9999 is always monitored.

The following shows the values to be automatically set in batches when the above values are set for Pr.999.

- Pr.999=10

Pr.No.	Setting item	Set value
79	Operation mode selection	1
118	PU communication speed	192
119	PU communication stop bit length/data length	10
120	PU communication parity check	1
121	Number of PU communication retries	9999
122	PU communication check time interval	9999
123	PU communication waiting time setting	0ms
124	PU communication CR/LF selection	1
340	Communication startup mode selection	0
549	Protocol selection	0

- Pr.999=12

Pr.No.	Setting item	Set value
79	Operation mode selection	1
118	PU communication speed	1152
119	PU communication stop bit length/data length	0
120	PU communication parity check	1
121	Number of PU communication retries	9999
122	PU communication check time interval	9999
123	PU communication waiting time setting	0ms
124	PU communication CR/LF selection	1
340	Communication startup mode selection	0
414	PLC function operation selection	2 *1
549	Protocol selection	0

*1 Before configuring the automatic batch setting, if Pr.414 is set to 1, the setting is not changed.

■Communication settings of inverter (Manual setting)

Set the following parameters using the PU (operation panel or parameter unit).

Do not change these parameters, even though they can be monitored from the GOT. If they are changed, communication with the GOT is disabled.

Setting item *1	Parameter No.	Set value	Contents of setting
PU communication station number	Pr.117	0 to 31	☞ Page 900 Station number setting
PU communication speed *2	Pr.118	192 *4	19200bps
PU communication stop bit length/data length *2	Pr.119	10 *6	Data length: 7bit Stop bit length: 1bit
PU communication parity check *2	Pr.120	1	Odd
Number of PU communication retries	Pr.121	9999	The inverter will not come to an alarm stop.
PU communication check time interval	Pr.122	9999 *4	Communication check suspension
PU communication waiting time setting	Pr.123	0	0ms
PU communication CR/LF selection	Pr.124	1 *3	With CR, without LF
Protocol selection	Pr.549	0	Mitsubishi Electric inverter (computer link) protocol
Operation mode selection	Pr.79	0 *3	External operation mode at power on
Link start mode selection	Pr.340	1	Network operation mode.
E^2PROM write selection	Pr.342	0	Written to RAM and EEPROM
PLC function operation selection *5	Pr.414	1, 2	Enabled with 1 and 2.

*1 Setting items are the parameter names described in the FR-E800 series manuals.

*2 Settings on the GOT can be changed.
When changing the settings on the GOT, be sure to change the parameters on the inverter to correspond with the GOT settings.

*3 Inverter default values (No need to change).

*4 Since the value has been set as a default, no setting is required when connecting to the PU connector on the inverter side.

*5 The inverter side setting defaults to 0 (invalid).
To use the PLC function, set 1 or 2.

*6 To use [FREQROL 800] or [FREQROL(Batch monitor)] drivers, set 0.

Connecting to sensor less servo (FR-E7□0EX)

Configure the communication settings of sensorless servo (FR-E7□0EX).

Be sure to perform the inverter reset after updating each parameter.

■Communication port and corresponding parameters

GOT connection destination	Parameters corresponding to inverter
PU connector	Pr.79, Pr.117 to Pr.124, Pr.340, Pr.342, Pr.549
FR-E7TR (RS-485 terminal block)	

■Communication settings of sensorless servo

Set the following parameters using the PU (operation panel or parameter unit).

Do not change these parameters, even though they can be monitored from the GOT. If they are changed, communication with the GOT is disabled.

Setting item*1	Parameter No.	Set value	Contents of setting
PU communication station number	Pr.117	0 to 31	☞ Page 900 Station number setting
PU communication speed*2	Pr.118	192*3	19200bps
PU communication stop bit length*2	Pr.119	10	Data length: 7bit Stop bit length: 1bit
PU communication parity check*2	Pr.120	1	Odd
Number of PU communication retries	Pr.121	9999	The inverter will not come to an alarm stop.
PU communication check time interval	Pr.122	9999	Communication check suspension
PU communication wait time setting	Pr.123	0	0ms
PU communication CR/LF selection	Pr.124	1*3	With CR, without LF
Protocol selection	Pr.549	0*3	Mitsubishi Electric inverter protocol
Operation mode selection	Pr.79	0*3	PU operation mode
Communication startup mode selection	Pr.340	1	Network operation mode.
Communication EEPROM write selection	Pr.342	0*3	Written to RAM and EEPROM

*1 Setting items are the parameters name described in the sensorless servo (FR-E7□0EfX) manuals.

*2 Settings on the GOT can be changed.
When changing the settings on the GOT, be sure to change the parameters on the inverter to correspond with the GOT settings.

*3 No change is required since this is the default value of sensorless servo (FR-E7□0EX).

Connecting to MELIPM series

Make the communication settings of the inverter.

Be sure to perform the inverter reset after updating each parameter.

■Communication port and corresponding parameters

GOT connection destination	Parameters corresponding to inverter
PU connector	Pr.79, Pr.117 to Pr.124

■Communication settings of inverter

Set the following parameters using the PU (parameter unit).

After setting the parameters for the communication settings, reset the inverter.

Do not change these parameters, even though they can be monitored from the GOT. If they are changed, communication with the GOT is disabled.

Setting item*1	Parameter No.	Set value	Contents of setting
Communication station number	Pr.117	0 to 31	☞ Page 900 Station number setting
Communication speed*2	Pr.118	192*3	19200bps
Stop bit length/data length*2	Pr.119	10	Data length: 7bit Stop bit length: 1bit
Parity check presence/absence*2	Pr.120	1	Odd
Number of communication retries	Pr.121	9999	The inverter will not come to an alarm stop.
Communication check time interval	Pr.122	9999	Communication check suspension
Wait time setting	Pr.123	0	0ms
CRLF presence/absence selection	Pr.124	1*3	With CR, without LF

*1 Setting items are parameter names described in the manual of MELIPM series.

*2 Settings on the GOT can be changed.
When changing the settings on the GOT, be sure to change the parameters on the inverter to correspond with the GOT settings.

*3 Inverter default values (No need to change)

Station number setting

Set each station number so that no station number overlaps.
The station number can be set without regard to the cable connection order. There is no problem even if station numbers are not consecutive.

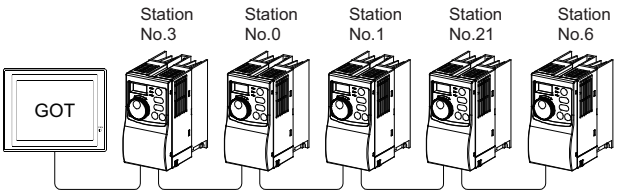

Examples of station number setting

Direct specification

When setting the device, specify the station number of the inverter of which data is to be changed.

Specification range
0 to 31

Indirect specification

When setting the device, indirectly specify the station number of the inverter of which data is to be changed using the 16-bit GOT internal data register (GD10 to GD25).
When specifying the station No. from 100 to 155 on GT Designer3, the value of GD10 to GD25 compatible to the station No. specification will be the station No. of the inverter.

Specification station NO.	Compatible device	Setting range
100	GD10	0 to 31 For the setting other than the above, error (dedicated device is out of range) will occur.
101	GD11	
102	GD12	
103	GD13	
104	GD14	
105	GD15	
106	GD16	
107	GD17	
108	GD18	
109	GD19	
110	GD20	
111	GD21	
112	GD22	
113	GD23	
114	GD24	
115	GD25	

Precautions

Station No. of inverter system

The station No. required for the inverter system will differ according to the selected driver.

- When selecting [FREQROL 500/700/800, SENSORLESS SERVO]

Make sure to establish inverter system with No.0 station.

- When selecting [FREQROL(Batch monitor)] or [FREQROL 800]

Make sure to establish inverter system with the station number set with the host address.

Number of inverter

Up to 31 inverters can be connected.

Parameter setting

■Communication parameter change

Do not make any change for each communication parameter of the inverter side from GOT.
If changed, the communication to the inverter cannot be made.

■When setting "8888" or "9999" to inverter parameter (Pr)

"8888" and "9999" designate special function. When specifying from the GOT, it will be as follows.

Set value of inverter side	Value specified by GOT
8888	65520
9999	65535

Screen switching devices, system information devices

Make sure to use GD for screen switching devices and system information devices when the GOT is connected to only the inverter.

GOT clock setting

The clock function is enabled or disabled depending on the driver selected.

- When selecting [FREQROL 500/700/800, SENSORLESS SERVO]

The clock function is disabled even though [Adjust] or [Broadcast] is set by the GOT clock setting.

- When selecting [FREQROL(Batch monitor)] or [FREQROL 800]

The clock function is enabled by using the PLC function of the FR-A800, FR-A800 Plus, or FR-F800 series.

Settable driver

The following shows the settable drivers according to the models used.

- When connecting the GOT to one or more inverters or sensorless servo drive units

[FREQROL 500/700/800, SENSORLESS SERVO]

- When connecting the GOT to one or more inverters (FR-A800, FR-A800 Plus, or FR-F800 series)

[FREQROL(Batch monitor)]
[FREQROL 800]

- When automatically connecting the GOT to an inverter (FR-A800, FR-A800 Plus, or FR-F800 series) or using the PLC function of an inverter (FR-A800, FR-A800 Plus, or FR-F800 series)

[FREQROL(Batch monitor)]
[FREQROL 800]

Automatic connection of FR-A800, FR-A800 Plus, or FR-F800 series

The automatic connection requires the user-specified negotiation time and the initialization wait time.

By monitoring the Notify Automatic Connection Status (GS277), you can check the completion of the automatic connection.

For details, refer to the following.

📖GT Designer3 (GOT2000) Screen Design Manual

15.3 Ethernet Connection

Connection to FR-E700, FR-A800, FR-A800 Plus, FR-F800, or FR-E800

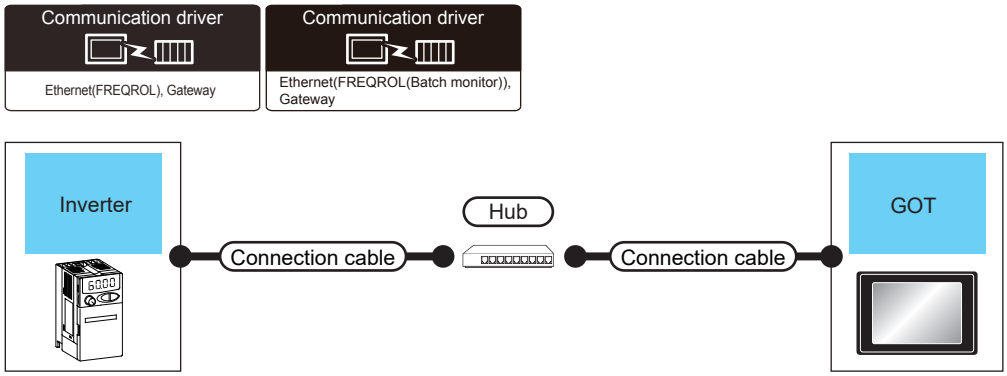

Inverter		Connection cable*1*2	Maximum segment length*3	GOT		Number of connectable equipment
Model name	Communication type			Option device*4	Model	
FR-E7□0-NE *6 *8 FR-A8□0 *7 FR-A8□2 *7 FR-A8□6 *7 FR-A8□0-GN FR-A8□2-GN FR-A8□0-E *5 FR-A8□2-E *5 FR-A8□6-E *5 FR-A8□0-E-CRN FR-A8□2-E-CRN FR-A8□0-E-R2R FR-A8□2-E-R2R FR-A8□0-E-AWH FR-A8□0-E-LC FR-F8□0 *7 FR-F8□2 *7 FR-F8□6 *7 FR-F8□0-E *5 FR-F8□2-E *5 FR-E8□0-E	Ethernet	• 100BASE-TX Shielded twisted pair cable (STP) or unshielded twisted pair cable (UTP) of category 5 or higher • 10BASE-T Shielded twisted pair cable (STP) or unshielded twisted pair cable (UTP) of category 3 or higher	100m	- (Built into GOT)	GT27 GT25 GT23 GT21 07W GT21 04R GT21 03P 04P ET/R4 GS25 GS21	*9
				GT25-J71E71-100	GT27 GT25	

*1 Only available for MELSEC-Q (A mode), MELSEC-A (AnSCPU), and Motion CPU (A series) small type.
Connect the GOT to the Ethernet module, hub, wireless LAN adapter (NZ2WL-JPA, NZ2WL-JPS), or other system equipment according to the Ethernet network system used.
Use cables, connectors, and hubs that meet the IEEE802.3 10BASE-T/100BASE-TX standard.

*2 When only one GOT is connected, the GOT can be directly connected to the controller without a hub.

*3 Length between a hub and a node
The maximum length depends on the Ethernet equipment used.
The following shows the number of the connectable nodes when a repeater hub is used.
• 10BASE-T: Up to 4 nodes for a cascade connection (500 m)
• 100BASE-TX: UP to 2 nodes for a cascade connection (205 m)
When switching hubs are used, the cascade connection between the switching hubs has no logical limit for the number of cascades.
For the limit, contact the switching hub manufacturer.

*4 GT25-W and GT2505-V do not support option devices.

*5 When the communication type is the Ethernet connection and the communication format is TCP, use an inverter whose SERIAL (serial No.) is "□7Z******" or later.
SERIAL (serial No.) is described on a rating plate of the inverter.

*6 Use an inverter whose SERIAL (serial No.) is "□88******" or later.
For FR-E700-SC-NNE and FR-E700-SC-ENE, use an inverter whose SERIAL (serial No.) is "□89******" or later.
SERIAL (serial No.) is described on a rating plate of the inverter.

*7 A built-in option (FR-A8NCG) is required.
Use an inverter whose SERIAL (serial No.) is the following.
SERIAL (serial No.) is described on a rating plate of the inverter.

Country of origin indication	SERIAL (serial No.)
MADE in Japan	□96****** and later
MADE in China	□97****** and later

*8 Select [FREQROL 800/E700NE(Batch monitor)] for [Controller Type] in [Controller Setting] in GT Designer3.

*9 The number of connectable GOTs and those of inverters differ depending on [Controller Type] in [Controller Setting] in GT Designer3.

[Controller Type]	Number of GOTs connectable to one inverter	Number of inverters connectable to one GOT
[FREQROL 800]	UDP: 16 (When monitoring the devices of the PLC) TCP: 1	UDP: 128 (16 or less recommended) TCP: 128 (16 or less recommended)
[FREQROL 800/E700NE(Batch monitor)]	UDP: Unlimited TCP: 1	UDP: 128 (16 or less recommended) TCP: 128 (16 or less recommended)

GOT side settings

Setting communication interface (Controller Setting)

Set the channel of the connected equipment.

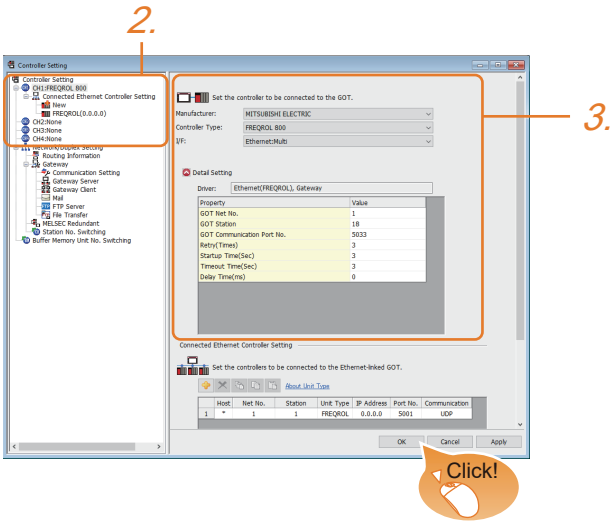

1. Select [Common] → [Controller Setting] from the menu.

2. In the [Controller Setting] window, select the channel No. to be used from the list menu.

3. Set the following items.

- [Manufacturer]: [MITSUBISHI ELECTRIC]
- [Controller Type]: Select one of the following items.

-[FREQROL 800]

-[FREQROL 800/E700NE(Batch monitor)]

- [I/F]: [Ethernet:Multi]
- [Detail Setting]: Configure the settings according to the usage environment.

☞ Page 906 Communication detail settings

4. When you have completed the settings, click the [OK] button.

Point

- When [Controller Type] is set to [FREQROL 800/E700NE(Batch monitor)]

The [Faults history] and [Batch monitor] functions of FR Configurator2 can be realized on GOT by creating the screens.

- Checking controller setting

The settings of connecting equipment can be confirmed in [I/F Communication Setting].

For details, refer to the following.

☞ Page 54 I/F communication setting

Communication detail settings

Make the settings according to the usage environment.

Property	Value
GOT Net No.	1
GOT Station	1
GOT Communication Port No.	5033
Retry(Times)	3
Startup Time(Sec)	3
Timeout Time(Sec)	3
Delay Time(ms)	0

Item	Description	Range
GOT Net No.	Set the network No. of the GOT. (Default: 1)	1 to 239
GOT Station*1	Set the station No. of the GOT. (Default: 18)	1 to 120
GOT Communication Port No.	Set the GOT port No. for the connection with the Ethernet module. The default value varies depending on the [Controller Type]. [FREQROL 800]: 5033 *2 [FREQROL 800/E700NE(Batch monitor)]: 5036 *2	1024 to 5010, 5014 to 65534 (Except for 5011 to 5013, 49153 to 49170)
Retry	Set the number of retries to be performed when a communication timeout occurs. When receiving no response after retries, the communication times out. (Default: 3times)	0 to 5times
Startup Time	Specify the time period from the GOT startup until GOT starts the communication with the PLC CPU. (Default: 3sec)	3 to 255sec
Timeout Time	Set the time period for a communication to time out. (Default: 3sec)	1 to 90sec
Delay Time	Set the delay time for reducing the load of the network/destination PLC. (Default: 0ms)	0 to 10000 (ms)

*1 Set different values for [GOT Station] of [Detail Setting] and [Station] of [Connected Ethernet Controller Setting].
☞ Page 907 Connected Ethernet Controller Setting

*2 When assigning the same driver to the multiple channels, in the communication drivers set as the second and following, the default value of [GOT Communication Port No.] becomes the earliest number in the vacant numbers of No. 6000 and later.

GOT Ethernet Setting

The GOT can be connected to a different network by configuring the following setting.

■GOT IP address setting

Set the following communication port setting.

- Standard port (When using GT25-W or GS25: Port 1)
- Extended port (When using GT25-W or GS25: Port 2)

■GOT Ethernet common setting

Set the following setting which is common to the standard port and the extended port, or port 1 and port 2.

- [Default Gateway]
- [Peripheral S/W Communication Port No.]
- [Transparent Port No.]

■IP filter setting

By configuring the IP filter setting, the access from the specific IP address can be permitted or shut off.

For the detailed settings, refer to the following manual.

☞ Page 50 GOT Ethernet Setting

Connected Ethernet Controller Setting

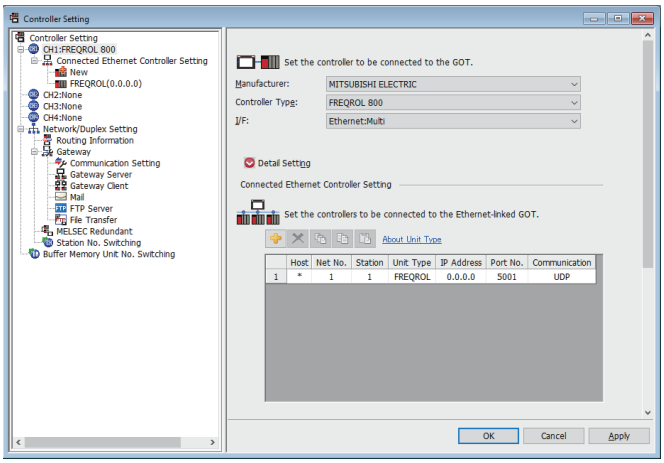

Item	Description	Set value
Host	The host is displayed. It refers to a station that can be connected without setting a station number. (The host is indicated with an asterisk (*).)	-
Net No.	Set the network No. of the connected Ethernet module. (Default: 1)	1 to 239
Station*1	Set the station No. of the connected Ethernet module. (Default: 1)	1 to 120
Unit Type	FREQROL (fixed)	FREQROL (fixed)
IP Address	Set the IP address of the connected Ethernet module. (Default: 0.0.0.0)	Inverter side IP address
Port No.	Set the port No. of the connected Ethernet module. (Default: 5001)	Inverter side port No.
Communication	UDP, TCP*2 (Default: UDP)	Adjust the settings with the Inverter settings.

*1 Set different values for [GOT Station] of [Detail Setting] and [Station] of [Connected Ethernet Controller Setting].
☞ Page 906 Communication detail settings

*2 For the connection to FR-E700-NE, only UDP is supported.

Point

• When connecting to an inverter in communication format [TCP]

When connecting to an inverter via [TCP] communication, use an inverter with SERIAL (serial No.) "□7Z******" or later.

SERIAL (serial No.) is described on a rating plate of the inverter.

• Communication interface setting by the Utility

The communication interface setting can be changed on the Utility's [Communication setting] after writing [Controller Setting] of project data.

For details on the Utility, refer to the following manual.

📖GOT2000 Series User's Manual (Utility)

• Precedence in communication settings

When settings are made by GT Designer3 or the Utility, the latest setting is effective.

Point

[Connected Ethernet Controller Setting] for GT21 and GS21

• Effective range of [Connected Ethernet Controller Setting]

Only [1] to [4] of [Connected Ethernet Controller Setting] can be used for GT21 and GS21.

If [5] onwards are used, the settings are invalid on GT21 or GS21.

• [Host] setting

Set [Host] within the range from [1] to [4] in [Connected Ethernet Controller Setting].

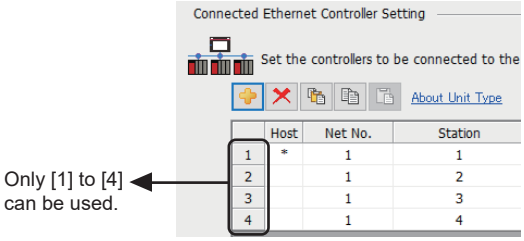

Inverter side settings

For details of the inverter, refer to the manual of each series.

Connecting to FR-A800, FR-F800, or FR-E800 series (FR-A8□0-E, FR-A8□2-E, FR-A8□6-E, FR-F8□0-E, FR-F8□2-E, or FR-E8□0-E)

■Communication settings

For setting up the inverter, refer to the following.

📖Manual of the inverter used

■Communication port and corresponding parameters

GOT connection destination	Parameters corresponding to inverter
Ethernet connector	Pr.79, Pr.340, Pr.342, Pr.414, Pr.502, Pr.549 to 551, Pr.779, Pr.1424 to 1429, Pr.1431 to 1432, Pr.1434 to 1455

■Communication settings of inverter

Set the following parameters using the PU (parameter unit).

Do not change these parameters, even though they can be monitored from the GOT.

If they are changed, communication with the GOT is disabled.

For parameter setting values, refer to the following.

📖Manual of the inverter used

○: Required, △: Set it as necessary

Setting item[*1]	Parameter No.	Setting necessity at GOT connection
Operation mode switching	Pr.79	△
Communication startup mode	Pr.340	△
Communication EEPROM write selection	Pr.342	△
PLC function operation	Pr.414	△
Stop mode selection at communication error	Pr.502	△
Protocol selection	Pr.549	○
NET mode command source selection	Pr.550	△
PU mode command source selection	Pr.551	△
Operation frequency during communication error	Pr.779	△
Ethernet communication network number [*2]	Pr.1424	○
Ethernet communication station number [*2]	Pr.1425	○
Link speed and duplex mode selection	Pr.1426	△
Ethernet function selection 1 [*2]	Pr.1427	○
Ethernet function selection 2	Pr.1428	△
Ethernet function selection 3	Pr.1429	△
Ethernet signal loss detection function selection	Pr.1431	△
Ethernet communication check time interval	Pr.1432	△
Ethernet IP address 1 (Built-in Ethernet) [*2]	Pr.1434	○
Ethernet IP address 2 (Built-in Ethernet) [*2]	Pr.1435	○
Ethernet IP address 3 (Built-in Ethernet) [*2]	Pr.1436	○
Ethernet IP address 4 (Built-in Ethernet) [*2]	Pr.1437	○
Subnet mask 1 [*2]	Pr.1438	△
Subnet mask 2 [*2]	Pr.1439	△
Subnet mask 3 [*2]	Pr.1440	△
Subnet mask 4 [*2]	Pr.1441	△
Ethernet IP filter address 1	Pr.1442	△
Ethernet IP filter address 2	Pr.1443	△
Ethernet IP filter address 3	Pr.1444	△
Ethernet IP filter address 4	Pr.1445	△
Ethernet IP filter address 2 range specification	Pr.1446	△
Ethernet IP filter address 3 range specification	Pr.1447	△

Setting item*1	Parameter No.	Setting necessity at GOT connection
Ethernet IP filter address 4 range specification	Pr.1448	△
Ethernet command source selection IP address 1	Pr.1449	△
Ethernet command source selection IP address 2	Pr.1450	△
Ethernet command source selection IP address 3	Pr.1451	△
Ethernet command source selection IP address 4	Pr.1452	△
Ethernet command source selection IP address 3 range specification	Pr.1453	△
Ethernet command source selection IP address 4 range specification	Pr.1454	△
Keepalive time	Pr.1455	△

*1 Setting items are the parameter names described in the FR-A800, FR-F800, and FR-E800 series manuals.
*2 Settings on the GOT can be changed.
When changing the settings on the GOT, be sure to change the parameters on the inverter to correspond with the GOT settings.

Connecting to FR-A800 Plus series

■Communication setting

For the inverter side settings, refer to the following.

📖Manual of the inverter used

■Communication port and the supported parameters

GOT connection destination	Inverter side parameter (R2R)	Inverter side parameter (CRN, AWH, LC)
Ethernet connector	Pr.79, Pr.340, Pr.342, Pr.442 to 445, Pr.502, Pr.549 to 551, Pr.1073 to 1078, Pr.1431, 1432, Pr.1434 to 1455	Pr.79, Pr.340, Pr.342, Pr.442 to 445, Pr.502, Pr.549 to 551, Pr.1424 to 1429, Pr.1431, 1432, Pr.1434 to 1455

■Inverter communication settings

Set the following parameters using the PU (parameter unit).

Do not change the parameters for communication setting from the GOT.

If they are changed, communication with the GOT may be disabled.

○: Required, △: Set it as necessar

Setting item*1	Parameter No.	Set value	Setting necessity at GOT connection
Operation mode switching	Pr.79	0 (default) *3	△
Communication startup mode	Pr.340	10 *3	△
Communication EEPROM write selection	Pr.342	0 (default) *3	△
Stop mode selection at communication error	Pr.502	0 (default) *3	△
Protocol selection	Pr.549	0 (default)	○
NET mode command source selection	Pr.550	9999 (default) *3	△
PU mode command source selection	Pr.551	2 *3	△
Ethernet communication network number *2	Pr.1073 (R2R) or Pr.1424 (CRN, AWH, LC)	1 to 239	○
Ethernet communication station number *2	Pr.1074 (R2R) or Pr.1425 (CRN, AWH, LC)	1 to 120	○
Link speed and duplex mode selection	Pr.1075 (R2R) or Pr.1426 (CRN, AWH, LC)	0 (default)	△
Ethernet function selection 1 *2	Pr.1076 (R2R) or Pr.1427 (CRN, AWH, LC)	5000 to 5002, 5006 to 5008	○
Ethernet function selection 2	Pr.1077 (R2R) or Pr.1428 (CRN, AWH, LC)	45237 (default) *3	△
Ethernet function selection 3	Pr.1078 (R2R) or Pr.1429 (CRN, AWH, LC)	9999 (default) *3	△
Ethernet signal loss detection function selection	Pr.1431	0 (default) *3	△
Ethernet communication check time interval	Pr.1432	9999 (default) *3	△
Ethernet IP address 1 (Built-in Ethernet) *2	Pr.1434	0 to 255	○
Ethernet IP address 2 (Built-in Ethernet) *2	Pr.1435	0 to 255	○
Ethernet IP address 3 (Built-in Ethernet) *2	Pr.1436	0 to 255	○
Ethernet IP address 4 (Built-in Ethernet) *2	Pr.1437	0 to 255	○
Subnet mask 1 *2	Pr.1438	255 (default) *3	△
Subnet mask 2 *2	Pr.1439	255 (default) *3	△
Subnet mask 3 *2	Pr.1440	255 (default) *3	△
Subnet mask 4 *2	Pr.1441	0 (default) *3	△

Setting item*1	Parameter No.	Set value	Setting necessity at GOT connection
Ethernet IP filter address 1	Pr.1442	0 (default) *3	△
Ethernet IP filter address 2	Pr.1443	0 (default) *3	△
Ethernet IP filter address 3	Pr.1444	0 (default) *3	△
Ethernet IP filter address 4	Pr.1445	0 (default) *3	△
Ethernet IP filter address 2 range specification	Pr.1446	9999 (default) *3	△
Ethernet IP filter address 3 range specification	Pr.1447	9999 (default) *3	△
Ethernet IP filter address 4 range specification	Pr.1448	9999 (default) *3	△
Ethernet command source selection IP address 1	Pr.1449	0 (default) *3	△
Ethernet command source selection IP address 2	Pr.1450	0 (default) *3	△
Ethernet command source selection IP address 3	Pr.1451	0 (default) *3	△
Ethernet command source selection IP address 4	Pr.1452	0 (default) *3	△
Ethernet command source selection IP address 3 range specification	Pr.1453	9999 (default) *3	△
Ethernet command source selection IP address 4 range specification	Pr.1454	9999 (default) *3	△
Keepalive time	Pr.1455	3600s (default) *3*4	△

*1 The parameter names described in the FR-A800 Plus series manuals
*2 Settings on the GOT can be changed.
When changing the settings on the GOT, be sure to change the parameters on the inverter to correspond with the GOT settings.
*3 Change the setting depending on the usage environment.
*4 For the precautions for the TCP/IP connection, refer to the following.
☞ Page 913 When the GOT and inverter are connected using TCP/IP

■Parameters for monitoring data specific to FR-A800 Plus series

For how to monitor the winding length (upper + lower) (PV29) and actual line speed (PV27), refer to the following.

☞ Page 892 Parameters for monitoring data specific to FR-A800 Plus series

Connecting to FR-E700 series (FR-E7□0-NE)

■Communication settings

For setting up the inverter, refer to the following.

📖Manual of the inverter used

• Communication port and corresponding parameters

GOT connection destination	Parameters corresponding to inverter
Ethernet connector	Pr.79, Pr.340,Pr.342, Pr.442 to 445, Pr.502, Pr.549 to 551, Pr.805 to 812, Pr.830 to 835, Pr.837 to 852

• Communication settings of inverter

Set the following parameters using the PU (parameter unit).

Do not change these parameters from the GOT.

If they are changed, communication with the GOT is disabled.

○: Required, △: Set it as necessary

Setting item*1	Parameter No.	Set value	Setting necessity at GOT connection
Operation mode switching	Pr.79	0 (default)*3	△
Communication startup mode	Pr.340	10*3	△
Communication EEPROM write selection	Pr.342	0 (default)*3	△
Stop mode selection at communication error	Pr.502	0 (default)*3	△
Protocol selection	Pr.549	0 (default)	○
NET mode command source selection	Pr.550	0 (default)*3	△
PU mode command source selection	Pr.551	2*3	△
Ethernet communication network number*2	Pr.830	1 to 239	○
Ethernet communication station number*2	Pr.831	1 to 120	○
Link speed and duplex mode selection	Pr.832	0 (default)	△
Ethernet function selection 1*2	Pr.833	30, 31, 36, 38	○
Ethernet function selection 2	Pr.834	20 (default)*3	△
Ethernet function selection 3	Pr.835	9999 (default)*3	△
Ethernet signal loss detection function selection	Pr.851	3 (default)*3	△
Ethernet communication check time interval	Pr.852	1.5 seconds (default)*3	△
Ethernet IP address 1 (Built-in Ethernet)*2	Pr.805	0 to 255	○
Ethernet IP address 2 (Built-in Ethernet)*2	Pr.806	0 to 255	○
Ethernet IP address 3 (Built-in Ethernet)*2	Pr.807	0 to 255	○
Ethernet IP address 4 (Built-in Ethernet)*2	Pr.808	0 to 255	○
Subnet mask 1*2	Pr.809	255 (default)*3	△
Subnet mask 2*2	Pr.810	255 (default)*3	△
Subnet mask 3*2	Pr.811	255 (default)*3	△
Subnet mask 4*2	Pr.812	0 (default)*3	△
Gateway address 1*2	Pr.442	0 (default)*3	△
Gateway address 2*2	Pr.443	0 (default)*3	△
Gateway address 3*2	Pr.444	0 (default)*3	△
Gateway address 4*2	Pr.445	0 (default)*3	△
Ethernet IP filter address 1	Pr.837	0 (default)*3	△
Ethernet IP filter address 2	Pr.838	0 (default)*3	△
Ethernet IP filter address 3	Pr.839	0 (default)*3	△
Ethernet IP filter address 4	Pr.840	0 (default)*3	△
Ethernet IP filter address 2 range specification	Pr.841	9999 (default)*3	△
Ethernet IP filter address 3 range specification	Pr.842	9999 (default)*3	△
Ethernet IP filter address 4 range specification	Pr.843	9999 (default)*3	△
Ethernet command source specification IP address 1	Pr.844	0 (default)*3	△
Ethernet command source specification IP address 2	Pr.845	0 (default)*3	△
Ethernet command source specification IP address 3	Pr.846	0 (default)*3	△

Setting item*1	Parameter No.	Set value	Setting necessity at GOT connection
Ethernet command source specification IP address 4	Pr.847	0 (default)*3	△
Ethernet command source selection IP address 3 range specification	Pr.848	9999 (default)*3	△
Ethernet command source selection IP address 4 range specification	Pr.849	9999 (default)*3	△
Ethernet TCP disconnection time coefficient	Pr.850	3600*3	△

*1 Setting items are the parameter names described in the FR-E700 series manuals.
*2 Settings on the GOT can be changed.
When changing the settings on the GOT, change the parameters on the inverter to correspond with the GOT settings.
*3 Change the setting depending on the usage environment.

Precautions

Connection port of inverter

Make sure to connect an Ethernet cable to an Ethernet port of an inverter.
When connecting an Ethernet cable by mistake to a PU port, there is a fear that equipment is damaged.

Monitoring virtual devices (RS, WS, A, Pr, PG, SP)

From multiple GOTs, it cannot monitor the virtual devices (RS, WS, A, Pr, PG, SP) of a single inverter at the same time.

When the GOT and inverter are connected using TCP/IP

When the GOT and inverter are connected using TCP/IP, they may not be connected again after they are disconnected.
In such a case, reset the inverter, or shorten the keepalive time and Ethernet TCP disconnection time coefficient.
For setting the keepalive time and Ethernet TCP disconnection time coefficient, refer to the following.
📖Manual of the inverter used

15.4 CC-Link IE TSN CONNECTION

Connection to FR-A800, FR-F800, or FR-E800

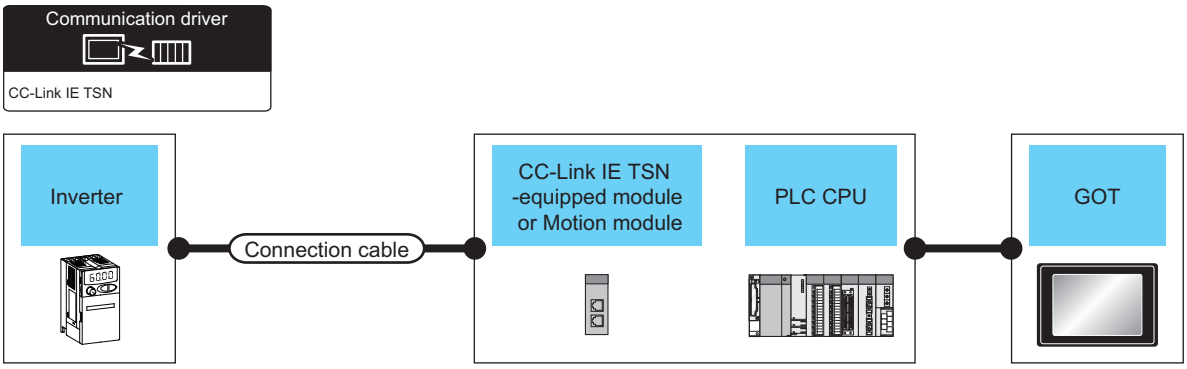

Inverter			Connection cable		PLC*4		GOT		Number of connectable equipment
Model name	CC-Link IE TSN Class	Communication type	Cable model *1*2	Max distance *3	CC-Link IE TSN-equipped module or Motion module	CPU type	Option device *5	Model	
FR-A8□0 *7 FR-A8□2 *7 FR-A8□6 *7 FR-A8□0-GN FR-A8□2-GN FR-F8□0 *7 FR-F8□2 *7 FR-F8□6 *7	CC-Link IE TSN Class B (Synchronized Realtime Communication)	CC-Link IE TSN	• 1000BASE-T Double-shielded twisted pair cable (STP) or twisted pair cable of category 5e or higher • 100BASE-TX Double-shielded twisted pair cable (STP) or twisted pair cable of category 5 or higher	12100m	RJ71GN11-T2	RnCPU RnENCPU RnSFCPU	GT25-J71GN13-T2	GT27 GT25	Up to 119 GOTs *6
					RJ71GN11-EIP	RnCPU RnENCPU			
					RD78G4 RD78G8 RD78G16 RD78G32 RD78G64 RD78GHV RD78GHW	RnCPU RnENCPU RnSFCPU			
FR-E8□0-E	CC-Link IE TSN Class A (Realtime Communication)	CC-Link IE TSN	• 1000BASE-T Double-shielded twisted pair cable (STP) or twisted pair cable of category 5e or higher • 100BASE-TX Double-shielded twisted pair cable (STP) or twisted pair cable of category 5 or higher	12100m	RJ71GN11-T2	RnCPU RnENCPU RnSFCPU	GT25-J71GN13-T2	GT27 GT25	Up to 119 GOTs *6
					RJ71GN11-EIP	RnCPU RnENCPU			
					RD78G4 RD78G8 RD78G16 RD78G32 RD78G64 RD78GHV RD78GHW	RnCPU RnENCPU RnSFCPU			

*1 When using a hub, use a TSN Switch or General-purpose Switch according to the system configuration.
For usable TSN Switches and General-purpose Switches, refer to the following.
MELSEC iQ-R CC-Link IE TSN User's Manual (Startup)

*2 Use the straight cable.

*3 The overall distance and station-to-station distance vary according to the connection method (line or star) and system configuration.
For details, refer to the following manual.
MELSEC iQ-R CC-Link IE TSN User's Manual (Startup)

*4 For the system configuration between the GOT and the PLC, refer to the following.
Page 595 CC-Link IE TSN CONNECTION

*5 GT25-W and GT2505-V do not support option devices.
*6 The number of connectable local devices is 120 (1 inverter and 119 GOTs).
*7 A built-in option (FR-A8NCG) is required.
Use an inverter whose SERIAL (serial No.) is the following.
SERIAL (serial No.) is described on a rating plate of the inverter.

Country of origin indication	SERIAL (serial No.)
MADE in Japan	□96****** and later
MADE in China	□97****** and later

Point

System configuration of the CC-Link IE TSN-equipped module or Motion module
For the system configuration of the CC-Link IE TSN-equipped module, refer to the following.
MELSEC iQ-R CC-Link IE TSN User's Manual (Startup)
MELSEC iQ-R CC-Link IE TSN Plus Master/Local Module User's Manual
For the system configuration of the Motion module, refer to the following.
MELSEC iQ-R Motion Module User's Manual (Startup)

GOT Side Settings

Setting communication interface (Controller Setting)

Set the channel of connecting equipment.

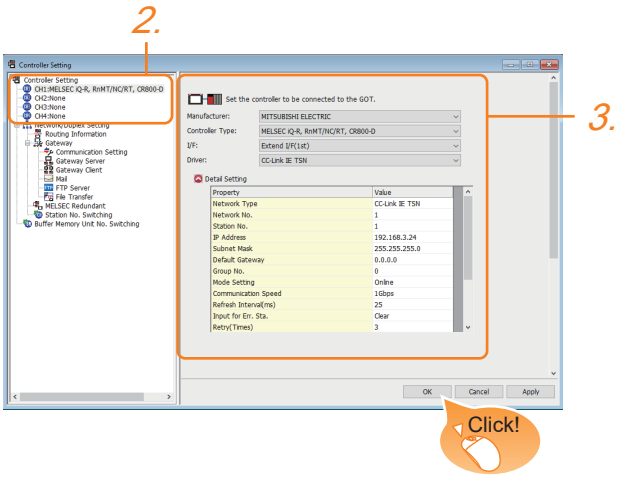

1. Select [Common] → [Controller Setting] from the menu.

2. In the [Controller Setting] window, select the channel No. to be used from the list menu.

3. Set the following items.

- [Manufacturer]: [MITSUBISHI ELECTRIC]
- [Controller Type]: [MELSEC iQ-R, RnMT/NC/RT, CR800-D]
- [I/F]: Extend I/F
- [Driver]: [CC-Link IE TSN]
- [Detail Setting]: Configure the settings according to the usage environment.

☞ Page 917 Communication detail settings

4. When you have completed the settings, click the [OK] button.

Point

The settings of connecting equipment can be confirmed in [I/F Communication Setting].
For details, refer to the following.
☞ Page 54 I/F communication setting

Communication detail settings

Make the settings according to the usage environment.

Property	Value
Network Type	CC-Link IE TSN
Network No.	1
Station No.	1
IP Address	192.168.3.24
Subnet Mask	255.255.255.0
Default Gateway	0.0.0.0
Group No.	0
Mode Setting	Online
Communication Speed	1Gbps
Refresh Interval(ms)	25
Input for Err. Sta.	Clear
Retry(Times)	3
Timeout Time(Sec)	3
Delay Time(ms)	0
Monitor Speed	High(Normal)
CPU No. switching GD device first No. (3 points)	500
Module No. switching GD device first No. (16 points	550
Servo axis switching GD device first No. (16 points)	10

Item	Description	Range
Network Type	Set the network Type.	CC-Link IE TSN
Network No.	Set the network No. of the GOT. (Default: 1)	1 to 239
Station No.	Set the station No. of the GOT. (Default: 1)	1 to 120
IP Address *1	Set the IP address of the GOT. (Default: 192.168.3.24)	0.0.0.1 to 223.255.255.254
Subnet Mask	Set the subnet mask for the sub network. (Only for connection via router) If the sub network is not used, the default value is set. (Default: 255.255.255.0)	0.0.0.0 to 255.255.255.255 *2
Default Gateway	Set the router address of the default gateway where the GOT is connected. (Only for connection via router) (Default: 0.0.0.0)	0.0.0.0 to 223.255.255.254
Group No.	-	0 (fixed)
Mode Setting	Set the operation mode of the GOT. (Default: Online) For details on the unit communication test mode, refer to the following. ☞ Page 607 Unit Communication test	Online, Offline, Module Communication Test
Communication Speed	Set the communication speed of the GOT. (Default: 1Gbps)	1Gbps, 100Mbps *3
Refresh Interval	Set the number of refreshes to secure the send/receive data in station units during communication. (Default: 25ms)	1 to 1000ms
Input for Error Station	Set the hold/clear of input from the station where the data link is faulty due to some reason such as turning the power OFF. (Default: Clear)	Clear, Hold
Retry	Set the number of retries to be performed when a communication timeout occurs. When receiving no response after retries, the communication times out. (Default: 3times)	0 to 5times
Timeout Time	Set the time period for a communication to time out. (Default: 3sec)	1 to 90sec
Delay Time	Set the delay time for reducing the load of the network/destination PLC. (Default: 0ms)	0 to 300ms
Monitor Speed	Set the monitor speed of the CC-Link IE TSN network. This setting is not valid in all systems. (Default: High(Normal))	High(Normal), Middle, Low
CPU No. switching GD device first No. (3 points)	Set the start device number of the GD devices for CPU No. switching. (Default: 500) For the details, refer to the following. ☞ Page 608 Start device number of the GD devices for CPU number switching	0 to 65520

Item	Description	Range
Module No. switching GD device first No. (16 points)	Set the start device number of the GD devices for module No. switching. (Default: 550) For the details, refer to the following. ☞ Page 609 Start device number of the GD devices for module number switching	0 to 65520
Servo axis switching GD device first No. (16 points)	Set the servo axis switching GD device first No. (Default: 10) For the details, refer to the following. ☞ Page 610 Servo axis switching GD device first No.	0 to 65520

*1 If any of the following settings is configured in the IP address, a communication timeout error occurs.
- The third octet and fourth octet are all 1 (*.*.255.255) or all 0 (*.*.0.0).
- The host part is all 1 (*.*.*.255) or all 0 (*.*.*.0).
- Some reserved addresses determined for special applications

For the details, refer to the following manual.
📖MELSEC iQ-R CC-Link IE TSN User's Manual (Application)

*2 When the subnet mask field is filled with 0, the operation is the same as when the field is left blank.

*3 When setting to 100Mbps, the following conditions must be satisfied.
- CC-Link IE TSN communication unit (GT25J71GN13-T2): Firmware version 02 or later
- CC-Link IE TSN master/local module (RJ71GN11-T2): Firmware version 04 or later

Point

- Communication interface setting by the Utility

The communication interface setting can be changed on the Utility's [Communication setting] after writing [Controller Setting] of project data.
For details on the Utility, refer to the following manual.
📖GOT2000 Series User's Manual (Utility)

- Precedence in communication settings

When settings are made by GT Designer3 or the Utility, the latest setting is effective.

- Setting the refresh interval

For [Refresh Interval(ms)] in [Controller Setting] in GT Designer3, set 5 ms or more per 1K words for the total size of the device set in [Network Configuration Settings] in GX Works3.
Setting less than 5 ms may affect the processing of the GOT such as a decrease of the monitoring speed.
The following shows setting examples of the total device size and refresh interval.

Total device size	Refresh Interval
1K words	5 ms or more
2K words	10 ms or more
3K words	15 ms or more
5K words	25 ms or more
36K words	180 ms or more

Routing parameter setting

Up to 64 [Transfer Network No.]s can be set.

However, the same transfer network number cannot be set twice or more (multiple times).

Therefore, the one that can access to other station from the request source host GOT is 64 kinds of [Transfer Network No.]s.

Point

Routing parameter setting

When communicating within the host network, routing parameter setting is unnecessary.

For details of routing parameters, refer to the following manual.

MELSEC iQ-R CPU Module User's Manual (Application)

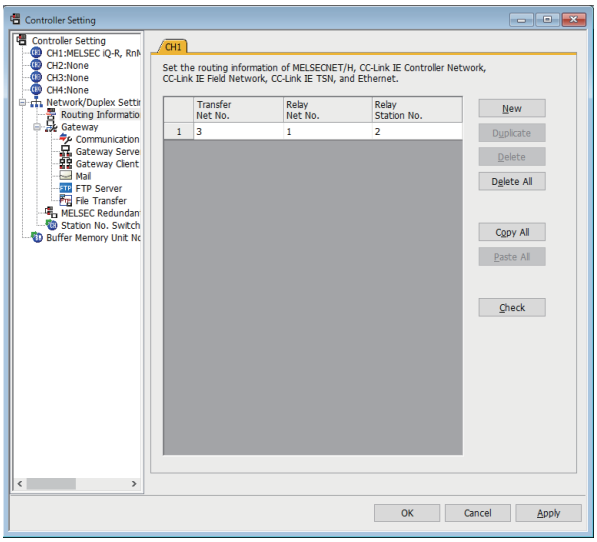

Item	Range
Transfer Network No.	1 to 239
Relay Network No.	1 to 239
Relay Station No.	0 to 120

Point

• Routing parameter setting of relay station

Routing parameter setting is also necessary for the relay station.

For the setting, refer to the following.

Page 920 PLC side settings

• Parameter reflection function of MELSOFT Navigator

The color of the cells for the items which are reflected to GT Designer3 from MELSOFT Navigator changes to green. Set items, which are displayed in green cells, from the MELSOFT Navigator.

When the settings of Transfer network No., Relay network No. or Relay station No. are reflected to the parameter from the MELSOFT Navigator, those settings are added. Items set in advance are not deleted.

However, if the target network No. overlaps, the item set in advance is overwritten.

The routing information is used manually by the user when the data is created. Therefore, after changing the network configuration by MELSOFT Navigator, create a routing information again. For details of the creation of the routing information, refer to the MELSOFT Navigator help.

PLC side settings

This section describes the settings of the GOT, CC-Link IE TSN-equipped module, and Motion module in the following system configuration.

Point

For details on the CC-Link IE TSN-equipped module, refer to the following.
MELSEC iQ-R CC-Link IE TSN User's Manual (Startup)
MELSEC iQ-R CC-Link IE TSN Plus Master/Local Module User's Manual
For details on the Motion module, refer to the following.
MELSEC iQ-R Motion Module User's Manual (Startup)

System configuration

The following shows a system configuration example of connection with a CC-Link IE TSN Class B (Synchronized Realtime Communication) inverter and the CC-Link IE TSN master/local module (RJ71GN11-T2) in a star topology.
For the setting details, refer to the following.
Page 612 PLC Side Settings

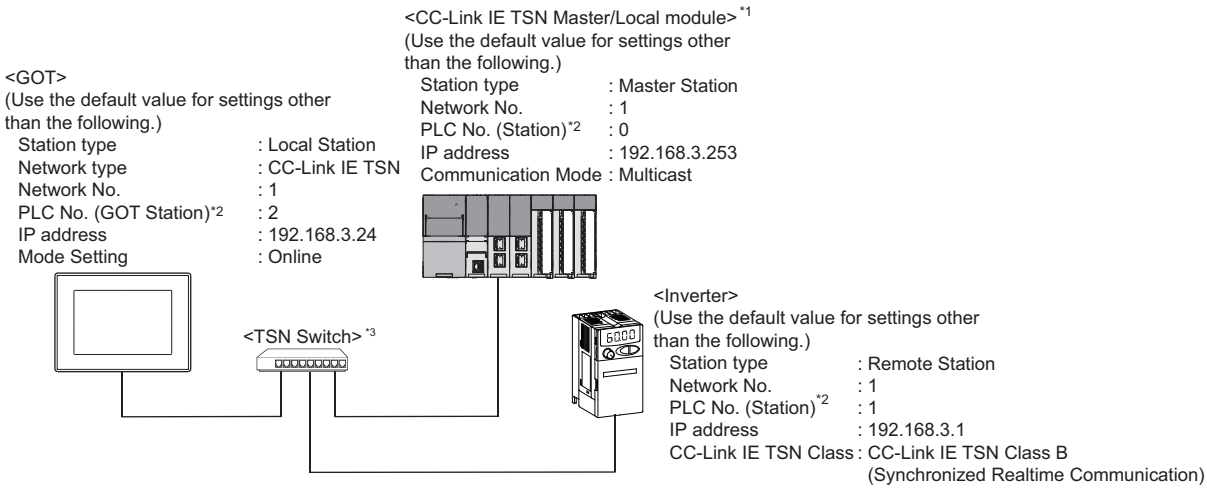

*1 The CC-Link IE TSN master/local module is mounted on slot 0 of the base unit.
The start I/O No. of the CC-Link IE TSN master/local module is set to "0".

*2 For the following setting contents, the setting names are different on the PLC side and the GOT side.

Contents of setting	Setting names		
	PLC side	GOT side	
		Controller Setting	Connected Ethernet Controller Setting
Network No.	Network No.	GOT Net No.	Net No.
PC No.	Station	GOT Station	Station

*3 For the connection via a hub, use a TSN Switch.
For details on the TSN Switch, refer to the following.
MELSEC iQ-R CC-Link IE TSN User's Manual (Startup)

Point

To directly control an inverter from a GOT, set [Communication Mode] of the master station to [Multicast].

[Parameter] in GX Works3

The following shows a parameter setting example for connecting to the CC-Link IE TSN master/local module (RJ71GN11-T2).

■Module parameter

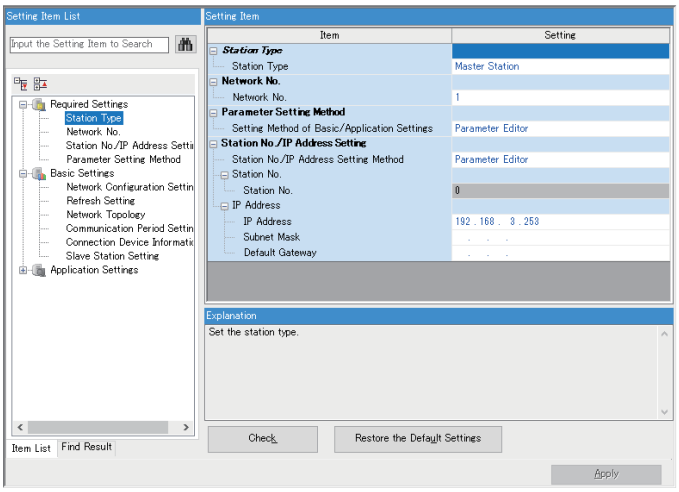

○: Necessary △: As necessary ×: Not necessary

Item	Set value	Setting necessity at GOT connection
Station type	Master Station	○
Network No. *1	1	○
Setting Method of Basic/Application Settings	Parameter Editor	○
Station No./IP Address Setting Method	Parameter Editor	○
Station No.	0 (fixed)	○
IP Address	192.168.3.253 (Use default value)	△
Subnet Mask	-	×
Default Gateway	-	×

*1 Specify the same network No. as that of the GOT.

Point

• When changing the module parameter

After writing module parameters to the PLC CPU, turn the PLC CPU OFF then back ON again, or reset the PLC CPU.

■Network Configuration Settings

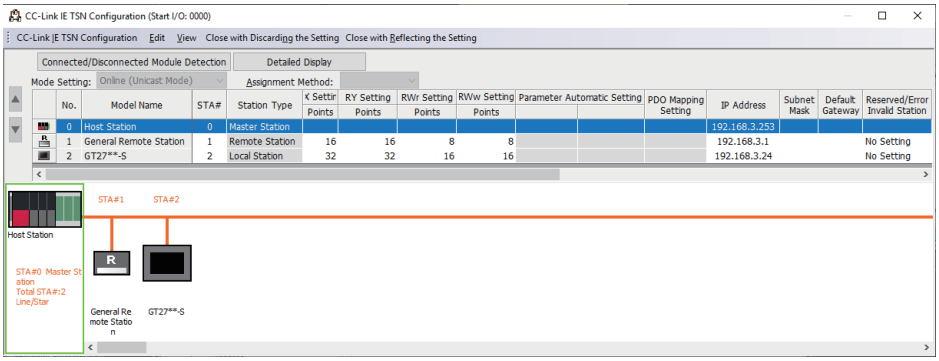

○: Necessary △: As necessary ×: Not necessary

Item	Set value	Setting necessity at GOT connection
Station No.	1	○
Station type	Remote Station	○
IP Address	192.168.3.1	○

Point

GOT network configuration settings

For the GOT network configuration settings, refer to the following.

☞ Page 615 Network Configuration Settings

[Controller Setting] in GT Designer3

Item	Set value
Network Type	CC-Link IE TSN
Network No.	1
Station No.	2
IP Address	192.168.3.24
Subnet Mask	255.255.255.0
Default Gateway	0.0.0.0
Group No.	0 (fixed)
Mode Setting	Online
Communication Speed	1Gbps (Use default value)
Refresh Interval	25ms (Use default value)
Input for Err. Sta.	Clear (Use default value)
Retry	3times (Use default value)
Timeout Time	3sec (Use default value)
Delay Time	0ms (Use default value)
Monitor Speed	High (Normal) (Use default value)

Point

[Controller Setting] in GT Designer3

For the setting method of [Controller Setting] in GT Designer3, refer to the following.

☞ Page 916 Setting communication interface (Controller Setting)

Inverter side settings

For details on the inverter, refer to the manual of each series.

Connecting to FR-A800 or FR-F800 series (FR-A8□0, FR-A8□2, FR-A8□6, FR-A8□0-GN, FR-A8□2-GN, FR-F8□0, FR-F8□2, or FR-F8□6)

Make the communication settings of the inverter.

Be sure to perform the inverter reset after updating each parameter.

■Communication port and corresponding parameters

GOT connection destination	Parameters corresponding to inverter
CC-Link IE TSN port	Pr.434 to 441, Pr.1442 to 1459

■Communication settings of inverter

Set the following parameters using the PU (parameter unit).

Do not change these parameters, even though they can be monitored from the GOT. If they are changed, communication with the GOT is disabled.

○: Required △: Set it as necessary

Setting item*1	Parameter No.	Set value	Setting necessity at GOT connection
Ethernet IP address 1 *2*4	Pr.434	0 to 255	○
Ethernet IP address 2 *2*4	Pr.435	0 to 255	○
Ethernet IP address 3 *2*4	Pr.436	0 to 255	○
Ethernet IP address 4 *2*4	Pr.437	0 to 255	○
Subnet mask 1 *2	Pr.438	255 (default) *3	△
Subnet mask 2 *2	Pr.439	255 (default) *3	△
Subnet mask 3 *2	Pr.440	255 (default) *3	△
Subnet mask 4 *2	Pr.441	0 (default) *3	△
Ethernet IP filter address 1	Pr.1442	0 (default) *3	△
Ethernet IP filter address 2	Pr.1443	0 (default) *3	△
Ethernet IP filter address 3	Pr.1444	0 (default) *3	△
Ethernet IP filter address 4	Pr.1445	0 (default) *3	△
Ethernet IP filter address 2 range specification	Pr.1446	9999 (default) *3	△
Ethernet IP filter address 3 range specification	Pr.1447	9999 (default) *3	△
Ethernet IP filter address 4 range specification	Pr.1448	9999 (default) *3	△
Clock source selection	Pr.1459	0 (default) *3*5	△

*1 Setting items are the parameter names described in the FR-A800 and FR-F800 series manuals.

*2 Settings on the GOT can be changed.
When changing the settings on the GOT, be sure to change the parameters on the inverter to correspond with the GOT settings.

*3 Change the setting depending on the usage environment.

*4 Specifying a value from [1] to [254] with the rotary switch of the inverter enables the settings of the switch.
When the setting is changed, the new setting is applied after the inverter reset or at the next power-on.

*5 The time synchronization operation differs depending on whether the FR-LU08 is installed.
For details on the time synchronization operations, refer to the following.
📖Manual of the inverter used

Connecting to FR-E800 series (FR-E8□0-E)

Make the communication settings of the inverter.

Be sure to perform the inverter reset after updating each parameter.

■Communication port and corresponding parameters

GOT connection destination	Parameters corresponding to inverter
CC-Link IE TSN port	Pr.1427 to 1429, Pr.1434 to 1448

■Communication settings of inverter

Set the following parameters using the PU (parameter unit).

Do not change these parameters, even though they can be monitored from the GOT. If they are changed, communication with the GOT is disabled.

○: Required △: Set it as necessary

Setting item*1	Parameter No.	Set value	Setting necessity at GOT connection
Ethernet function selection 1	Pr.1427	5001	△
Ethernet function selection 2	Pr.1428	45237	△
Ethernet function selection 3	Pr.1429	45238	○
Ethernet function selection 4	Pr.1430	9999	△
Ethernet IP address 1 *2	Pr.1434	0 to 255	○
Ethernet IP address 2 *2	Pr.1435	0 to 255	○
Ethernet IP address 3 *2	Pr.1436	0 to 255	○
Ethernet IP address 4 *2	Pr.1437	0 to 255	○
Subnet mask 1 *2	Pr.1438	255 (default) *3	△
Subnet mask 2 *2	Pr.1439	255 (default) *3	△
Subnet mask 3 *2	Pr.1440	255 (default) *3	△
Subnet mask 4 *2	Pr.1441	0 (default) *3	△
Ethernet IP filter address 1	Pr.1442	0 (default) *3	△
Ethernet IP filter address 2	Pr.1443	0 (default) *3	△
Ethernet IP filter address 3	Pr.1444	0 (default) *3	△
Ethernet IP filter address 4	Pr.1445	0 (default) *3	△
Ethernet IP filter address 2 range specification	Pr.1446	9999 (default) *3	△
Ethernet IP filter address 3 range specification	Pr.1447	9999 (default) *3	△
Ethernet IP filter address 4 range specification	Pr.1448	9999 (default) *3	△

*1 Setting items are the parameter names described in the FR-E800 series manuals.

*2 Settings on the GOT can be changed.
When changing the settings on the GOT, be sure to change the parameters on the inverter to correspond with the GOT settings.

*3 Change the setting depending on the usage environment.

Precautions

GOT startup time

Connecting to the PLC or inverter takes longer time in the CC-Link IE TSN connection.
If you start the GOT while the connection is being established, a system alarm occurs.
Adjust the opening screen time in the GOT setup so that no system alarm occurs.
📖GT Designer3 (GOT2000) Screen Design Manual

Connection status check after the GOT startup

The connection with the network cannot be established until the connection check with the master station is completed after the GOT startup.
To check the status of connection with the master station, use the CC-Link IE TSN Connection Status (GS1297) of the GOT internal device.
For details on the CC-Link IE TSN Connection Status (GS1297), refer to the following.
📖GT Designer3 (GOT2000) Screen Design Manual

15.5 Connection through a PLC

Connection to FR-E700, FR-A800, FR-A800 Plus, FR-F800, or FR-E800

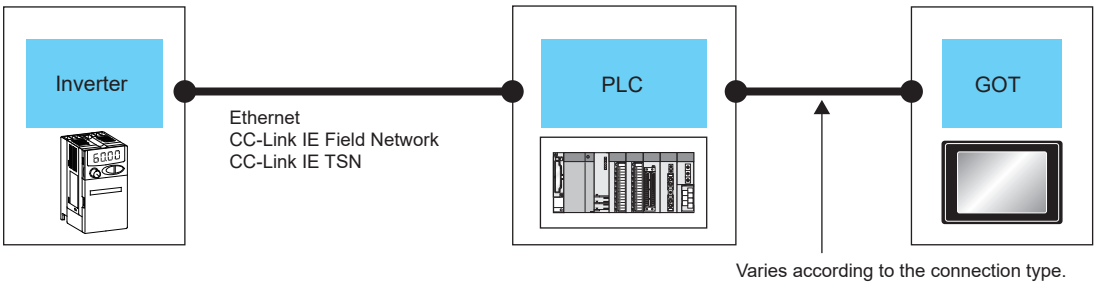

Inverter		PLC	Communication type *1	GOT		Number of connectable equipment
Model name	Communication type	CPU type		Option device *5	Model	
FR-E7□0-NE *8 FR-A8□0-E *7 FR-A8□2-E *7 FR-A8□6-E *7 FR-A8□0-E-CRN FR-A8□2-E-CRN FR-A8□0-E-R2R FR-A8□2-E-R2R FR-A8□0-E-AWH FR-A8□0-E-LC FR-F8□0-E *7 FR-F8□2-E *7 FR-E8□0-E	Ethernet	RCPU QCPU LCPU	For the system configuration between the GOT and the PLC, refer to the following. ☞ Page 217 ETHERNET CONNECTION*12 ☞ Page 375 DIRECT CPU CONNECTION (SERIAL) ☞ Page 439 SERIAL COMMUNICATION CONNECTION ☞ Page 493 BUS CONNECTION ☞ Page 541 MELSECNET/H, MELSECNET/10 CONNECTION (PLC TO PLC NETWORK)*12 ☞ Page 595 CC-Link IE TSN CONNECTION*12 ☞ Page 625 CC-Link IE CONTROLLER NETWORK CONNECTION*12 ☞ Page 665 CC-Link IE FIELD NETWORK CONNECTION*4*12	*2	*2	*3
FR-A8□0 *6 FR-A8□2 *6 FR-A8□6 *6 FR-A8□0-GF FR-A8□2-GF FR-A8□0-CRN *6 FR-A8□2-CRN *6 FR-A8□0-R2R *6 FR-A8□2-R2R *6 FR-A8□0-LC*6 FR-F8□0 *6 FR-F8□2 *6 FR-F8□6 *6	CC-Link IE Field Network *4*11	RCPU QCPU LCPU				
FR-A8□0 *9 FR-A8□2 *9 FR-A8□6 *9 FR-A8□0-GN FR-A8□2-GN FR-F8□0 *9 FR-F8□2 *9 FR-F8□6 *9 FR-E8□0-E	CC-Link IE TSN *10	RCPU				

*1 The connection type depends on the CPU model.
☞ [System Configuration] section in each chapter
*2 The option devices and GOT models depend on the connection type.
☞ [System Configuration] section in each chapter
*3 The numbers of connectable devices below depend on the connection type.
☞ [System Configuration] section in each chapter
• Number of GOTs connectable to one PLC
• Number of PLCs connectable to one GOT
*4 When connecting the GOT and PLC using the CC-Link IE Field Network connection and then connecting an inverter, connect the inverter via a CC-Link IE Field Network master/local module (master station).
In this case, a different network will be accessed, so the routing must be set.
*5 GT25-W, GT2505-V, and GS25 do not support options.
*6 CC-Link IE Field Network Communication Option (FR-A8NCE) is required.
Use a CC-Link IE Field Network communication option (FR-A8NCE) whose SERIAL (serial No.) is "□83***" or later.
SERIAL (serial No.) is described on the CC-Link IE Field Network communication option (FR-A8NCE).
*7 When the communication type is the Ethernet connection and the communication format is TCP, use an inverter whose SERIAL (serial No.) is "□7Z******" or later.
SERIAL (serial No.) is described on a rating plate of the inverter.
*8 Use an inverter whose SERIAL (serial No.) is "□88******" or later.
For FR-E700-SC-NNE and FR-E700-SC-ENE, use an inverter whose SERIAL (serial No.) is "□89******" or later.
SERIAL (serial No.) is described on a rating plate of the inverter.
*9 A built-in option (FR-A8NCG) is required.
Use an inverter whose SERIAL (serial No.) is the following.
SERIAL (serial No.) is described on a rating plate of the inverter.

Country of origin indication	SERIAL (serial No.)
MADE in Japan	□96****** and later
MADE in China	□97****** and later

*10 When connecting a GOT and inverter via the PLC, set the third octet of the inverter IP address to the network No., and the fourth octet to the station No.
The following shows a setting example of the IP address when the network No. is "1" and the station No. is "2".

192.168.1.2

Station No.

Network No.

For the setting details, refer to the following.
📖FR-A800-GN CC-LINK IE TSN FUNCTION MANUAL
📖FR-A8NCG INSTRUCTION MANUAL
*11 Use an inverter with SERIAL (serial No.) "□83******" or later.
SERIAL (serial No.) is described on a rating plate of the inverter.
*12 To monitor other networks, routing parameter setting is necessary.
For the routing parameter setting, refer to the following.
☞ Routing parameter setting described in each chapter

GOT side settings

The GOT settings depend on the connection type between the GOT and PLC.

For details on the GOT settings, refer to the following.

☞ Page 217 ETHERNET CONNECTION
☞ Page 375 DIRECT CPU CONNECTION (SERIAL)
☞ Page 439 SERIAL COMMUNICATION CONNECTION
☞ Page 493 BUS CONNECTION
☞ Page 541 MELSECNET/H, MELSECNET/10 CONNECTION (PLC TO PLC NETWORK)
☞ Page 595 CC-Link IE TSN CONNECTION
☞ Page 625 CC-Link IE CONTROLLER NETWORK CONNECTION
☞ Page 665 CC-Link IE FIELD NETWORK CONNECTION

Inverter side settings

For details of the inverter, refer to the manual of each series.

Connection by Ethernet

■Communication settings

For setting up the inverter, refer to the following.

📖Manual of the inverter used

For details on the communication port, parameters corresponding to the inverter, and communication settings of the inverter, refer to the following.

☞ Page 909 Connecting to FR-A800, FR-F800, or FR-E800 series (FR-A8□0-E, FR-A8□2-E, FR-A8□6-E, FR-F8□0-E, FR-F8□2-E, or FR-E8□0-E)

CC-Link IE Field Network connection

■Communication settings

For setting up the inverter, refer to the following.

📖Manual of the inverter used

- Communication port and corresponding parameters

GOT connection destination	Parameters corresponding to inverter
Ethernet connector	Pr.79, Pr.313 to 315, Pr.338 to 340, Pr.342, Pr.349, Pr.434 to 435, Pr.500 to 502, Pr.541, Pr.550, Pr.779, Pr.804, Pr.810

- Communication settings of inverter

Set the following parameters using the PU (parameter unit).

Do not change these parameters, even though they can be monitored from the GOT.

If they are changed, communication with the GOT is disabled.

○: Required, △: Set it as necessary

Setting item *1	Parameter No.	Set value	Setting necessity at GOT connection
Operation mode selection	Pr.79	0 (default) *3	△
Communication startup mode selection	Pr.340	10 *3	△
DO0 output selection	Pr.313	9999 (default) *3	△
DO1 output selection	Pr.314	9999 (default) *3	△
DO2 output selection	Pr.315	9999 (default) *3	△
Communication operation command source	Pr.338	0 (default) *3	△
Communication speed command source	Pr.339	0 (default) *3	△
Communication EEPROM write selection	Pr.342	0 (default) *3	△
Communication reset selection	Pr.349	0 (default) *3	△
Network number (CC-Link IE) *2	Pr.434	1 to 239	○
Station number (CC-Link IE) *2	Pr.435	1 to 120	○
Communication error execution waiting time	Pr.500	0s (default) *3	△
Communication error occurrence count display	Pr.501	0 (default) *3	△
Stop mode selection at communication error	Pr.502	0 (default) *3	△
Frequency command sign selection	Pr.541	0 (default) *3	△
NET mode operation command source selection	Pr.550	0 *3	△
Operation frequency during communication error	Pr.779 *4	9999 (default) *3	△
Torque command source selection	Pr.804	0 (default) *3	△
Torque limit input method selection	Pr.810	0 (default) *3	△

*1 The setting items are the parameter names described in the manuals of the FR-A800 and FR-F800 series.

*2 Settings on the GOT can be changed.
When changing the settings on the GOT, be sure to change the parameters on the inverter to correspond with the GOT settings.

*3 Change the setting depending on the usage environment.

*4 For FR-A8□0-R2R and FR-A8□2-R2R, this setting is unavailable.

■Parameters for monitoring data specific to FR-A800 Plus series

For how to monitor the winding length (upper + lower) (PV29) and actual line speed (PV27), refer to the following.

☞ Page 892 Parameters for monitoring data specific to FR-A800 Plus series

CC-Link IE TSN connection

■Communication settings

For setting up the inverter, refer to the following.

📖Manual of the inverter used

For details on the communication port, parameters corresponding to the inverter, and communication settings of the inverter, refer to the following.

☞ Page 923 Connecting to FR-A800 or FR-F800 series (FR-A8□0, FR-A8□2, FR-A8□6, FR-A8□0-GN, FR-A8□2-GN, FR-F8□0, FR-F8□2, or FR-F8□6)

☞ Page 924 Connecting to FR-E800 series (FR-E8□0-E)

Precautions

When the device of the PLC and virtual device of the inverter are monitored simultaneously

In the following cases, the device monitor speed of the PLC that passes through the GOT and inverter decreases.

- Monitoring the device of the PLC and virtual device of the inverter on the same screen or background
- Resetting the inverter

By connecting a different channel for each controller with the multi-channel function, the decreasing device monitor speed of the PLC can be improved.

Link devices of CC-Link IE Field Network, CC-Link IE TSN, or CC-Link IE Field Network Basic connection

When functions (signals) are assigned to link devices (RX, RY, RWr, RWw) on the inverter, the GOT cannot write data to these virtual devices.

Example) CMD1 (Forward rotation command)

Since the forward rotation command is assigned to RY0 on the inverter, the GOT cannot write data to the virtual device, or CMD1 (forward rotation command).

For the functions (signals) assigned to the link devices (RX, RY, RWw, and RWr), refer to the following.

📖Manual of the inverter used

Control the functions (signals) assigned to the link devices (RX, RY, RWw, and RWr) on the master station.

For CC-Link IE Field Network Basic connection, refer to the following.

📖GOT2000 Series Connection Manual (Microcomputers, MODBUS/Fieldbus Products, Peripherals) For GT Works3 Version1

15.6 Settable Device Range

Direct connection to inverter

For the device setting dialog, refer to the following.

☞ Page 1384 Device setting dialog (Mitsubishi Electric equipment)

For details on the device range that can be used on the GOT, refer to the following.

☞ Page 1708 [FREQROL 500/700/800, SENSORLESS SERVO]
☞ Page 1717 [FREQROL 800]
☞ Page 1725 [FREQROL 800/E700NE(Batch monitor)]

Connection to inverter through PLC

For details of the device setting, refer to the following.

☞ Page 1383 Settable Device Range

16 SERVO AMPLIFIER CONNECTION

- Page 931 Connectable Model List
- Page 933 Serial Connection
- Page 953 Ethernet Connection
- Page 972 Connection through a PLC
- Page 980 Settable Device Range
- Page 981 Precautions

16.1 Connectable Model List

The following table shows the connectable models.

Series	Model name	Clock	Communication type	Connectable model	Refer to
MELSERVO-J2-Super	MR-J2S-□A MR-J2S-□CP MR-J2S-□CL	×	RS-232 RS-422	GT27 GT25 GT23 GT21 07W GT21 05Q GT21 04R GT21 03P 04P ET/R4 GT21 03P 04P R4 GT21 03P 04P R2 GS25 GS21	☞ Page 933 Connection to the MELSERVO-J2-Super Series
MELSERVO-J2M	MR-J2M-P8A MR-J2M-□DU	×	RS-232 RS-422	GT27 GT25 GT23 GT21 07W GT21 05Q GT21 04R GT21 03P 04P ET/R4 GT21 03P 04P R4 GT21 03P 04P R2 GS25 GS21	☞ Page 935 Connection to the MELSERVO-J2M Series
MELSERVO-J3	MR-J3-□A MR-J3-□T	×	RS-232 RS-422	GT27 GT25 GT23 GT21 07W GT21 05Q GT21 04R GT21 03P 04P ET/R4 GT21 03P 04P R4 GT21 03P 04P R2 GS25 GS21	☞ Page 937 Connection to the MELSERVO-J4, J3 Series
MELSERVO-J4	MR-J4-□A*1 MR-J4-□A-RJ*1	×	RS-232 RS-422	GT27 GT25 GT23 GT21 07W GT21 05Q GT21 04R GT21 03P 04P ET/R4 GT21 03P 04P R4 GT21 03P 04P R2 GS25 GS21	☞ Page 937 Connection to the MELSERVO-J4, J3 Series
	MR-J4-□B*2*6 MR-J4-□B-RJ*2*6 MR-J4W2-□B*2*6 MR-J4W3-□B*2*6	×	*3	GT27 GT25 GT23 GT21 07W GT21 05Q GT21 04R GT21 03P 04P ET/R4 GT21 03P 04P R4 GT21 03P 04P R2 GS25 GS21	☞ Page 972 Connection to MELSERVO-J4 series
	MR-J4-□GF*4 MR-J4-□GF-RJ*4	×	*5		
MELSERVO-J5	MR-J5-□B MR-J5-□B-RJ MR-J5W2-□B MR-J5W3-□B	×	*5	GT27 GT25 GT23 GT21 07W GT21 05Q GT21 04R GT21 03P 04P ET/R4 GT21 03P 04P R4 GT21 03P 04P R2 GS25 GS21	☞ Page 974 Connection to MELSERVO-J5 or JET series
	MR-J5-□G *7 MR-J5-□G-RJ *7 MR-J5W2-□G *7 MR-J5W3-□G *7 MR-J5D1-□G4*7 MR-J5D2-□G4*7 MR-J5D3-□G4*7	×	*5	GT27 GT25 GT23 GT21 07W GT21 04R GT21 03P 04P ET/R4 GS25 GS21	☞ Page 974 Connection to MELSERVO-J5 or JET series
	MR-J5-□G MR-J5-□G-RJ MR-J5W2-□G *8 MR-J5W3-□G *8 MR-J5D1-□G4 MR-J5D2-□G4*8 MR-J5D3-□G4*8	×	Ethernet	GT27 GT25 GT23 GT21 07W GT21 04R GT21 03P 04P ET/R4 GS25 GS21	☞ Page 953 Connection to the MELSERVO-J5 or JET series

Series	Model name	Clock	Communication type	Connectable model	Refer to
MELSERVO-JET	MR-JET-□G *7	×	*5	GT27 GT25 GT23 GT21 07W GT21 04R GT21 03P 04P ET/R4 GS25 GS21	☞ Page 974 Connection to MELSERVO-J5 or JET series
	MR-JET-□G	×	Ethernet	GT27 GT25 GT23 GT21 07W GT21 04R GT21 03P 04P ET/R4 GS25 GS21	☞ Page 953 Connection to the MELSERVO-J5 or JET series
MELSERVO-JE	MR-JE-□A	×	RS-422	GT27 GT25 GT23 GT21 07W GT21 05Q GT21 04R GT21 03P 04P ET/R4 GT21 03P 04P R4 GT21 03P 04P R2 GS25 GS21	☞ Page 941 Connection to the MELSERVO-JE-□A Series
	MR-JE-□B*2 MR-JE-□BF*2	×	*3	GT27 GT25 GT23 GT21 07W GT21 05Q GT21 04R GT21 03P 04P ET/R4 GT21 03P 04P R4 GT21 03P 04P R2 GS25 GS21	☞ Page 978 Connection to MELSERVO-JE-□B series
	MR-JE-□C	×	Ethernet	GT27 GT25 GT23 GT21 07W GT21 04R GT21 03P 04P ET/R4 GS25 GS21	☞ Page 956 Connection to the MELSERVO-JE-C Series

*1 For the RS-422 communication, use MELSERVO-J4 of software version A3 or a later version.
*2 The models are connected to the GOT through a Motion controller or Simple Motion module.
*3 The communication type depends on the connection type between a motion CPU or PLC CPU and the GOT.
*4 The models are connected to the GOT through a Simple Motion module or CC-Link IE Field Network master/local module.
*5 The communication type depends on the connection type between a PLC CPU and the GOT.
*6 If the models are J3-compatible, the GOT cannot monitor the servo amplifiers.
*7 The models are connected to the GOT through a Motion module or CC-Link IE TSN master/local module.
*8 The connection with the PLC through a CC-Link IE Field Network Basic is not supported.

16.2 Serial Connection

Connection to the MELSERVO-J2-Super Series

When connecting via RS-232 communication

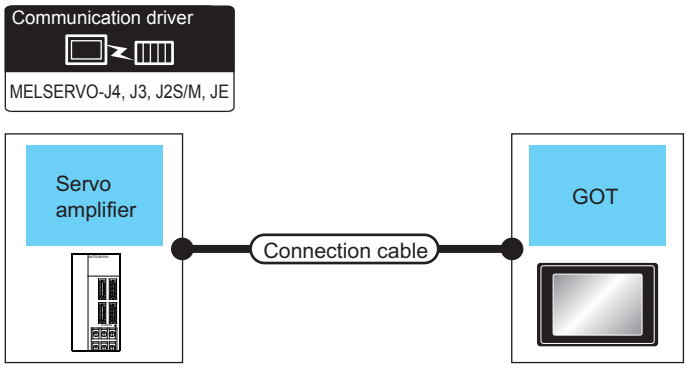

Servo amplifier*1		Connection cable		GOT		Number of connectable equipment
Model name	Communication type	Cable model Connection diagram number	Max. distance	Option device*3	Model	
MR-J2S-□A*1 MR-J2S-□CP*1 MR-J2S-□CL*1	RS-232	MR-CPCATCBL3M(3m) or User preparing RS-232 connection diagram 1)	15m	- (Built into GOT)	GT27 GT25 GT23 GT21 07W GT21 05Q GS25 GS21	1 GOT for 1 servo amplifier
				GT15-RS2-9P	GT27 GT25	
				GT10-C02H-6PT9P*2	GT21 03P 04P R4 GT21 03P 04P R2	
		MR-CPCATCBL3M(3m) or User preparing RS-232 connection diagram 1) + User preparing RS-232 connection diagram 2)	15m	- (Built into GOT)	GT21 04R GT21 03P 04P R2	
		User preparing RS-232 connection diagram 3)	15m	- (Built into GOT)	GT21 04R GT21 03P 04P R2	

*1 Connect the connector of the servo amplifier to CN3.
*2 When a GT10-C02H-6PT9P unit of the sub version A or B is used, do not ground the case of the D-sub (9-pin) connector.
*3 GT25-W and GT2505-V do not support option devices.

When connecting via RS-422 communication

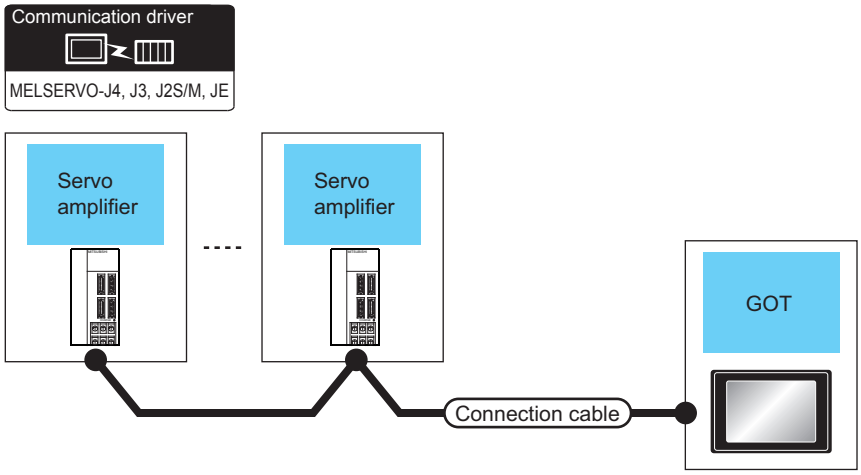

Servo amplifier*1		Connection cable	GOT		Max. distance	Number of connectable equipment
Model name	**Communication type**	**Connection diagram number**	**Option device*3**	**Model**		
MR-J2S-□A*1 MR-J2S-□CP*1 MR-J2S-□CL*1	RS-422	User preparing RS-422 connection diagram 1)	- (Built into GOT)	GT27 GT25 GT23 GT21(07W) GT21(05C) GS25 GS21	30m	Up to 32 servo amplifiers for 1 GOT*2 (multi-drop communication)
			GT15-RS4-9S	GT27 GT25		
			GT10-C02H-9SC	GT21(04R) GT21(03P 04P R4)		
		User preparing RS-422 connection diagram 6)	- (Built into GOT)	GT21(04P) GT21(03P 04P ET/R4) GT21(03P 04P R4)		

*1 Connect the connector of the servo amplifier to CN3.
*2 Up to 10 servo amplifiers can be connected to GS21-W.
*3 GT25-W and GT2505-V do not support option devices.

Connection to the MELSERVO-J2M Series

When connecting via RS-232 communication

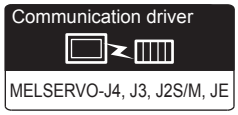

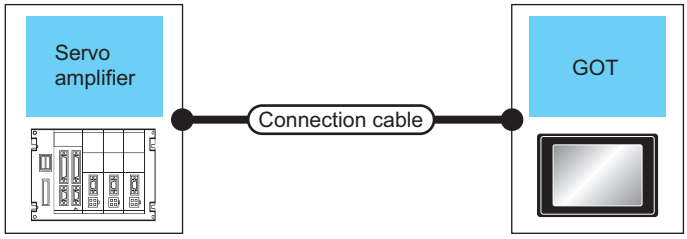

Servo amplifier*1		Connection cable		GOT		Number of connectable equipment
Model name	Communication type	Cable model Connection diagram number	Max. distance	Option device*3	Model	
MR-J2M-P8A*1 MR-J2M-□DU*1	RS-232	MR-CPCATCBL3M(3m) or User preparing RS-232 connection diagram 1)	15m	- (Built into GOT)	GT27 GT25 GT23 GT21 07W GT21 05Q GS25 GS21	1 GOT for 1 servo amplifier
				GT15-RS2-9P	GT27 GT25	
				GT10-C02H-6PT9P*2	GT21 03P 04P R4 GT21 03P 04P R2	
		MR-CPCATCBL3M(3m) or User preparing RS-232 connection diagram 1) + User preparing RS-232 connection diagram 2)	15m	- (Built into GOT)	GT21 04R GT21 03P 04P R2	
		User preparing RS-232 connection diagram 3)	15m	- (Built into GOT)	GT21 04R GT21 03P 04P R2	

*1 Connect the connector of the servo amplifier to CN3.
*2 When a GT10-C02H-6PT9P unit of the sub version A or B is used, do not ground the case of the D-sub (9-pin) connector.
*3 GT25-W and GT2505-V do not support option devices.

When connecting via RS-422 communication

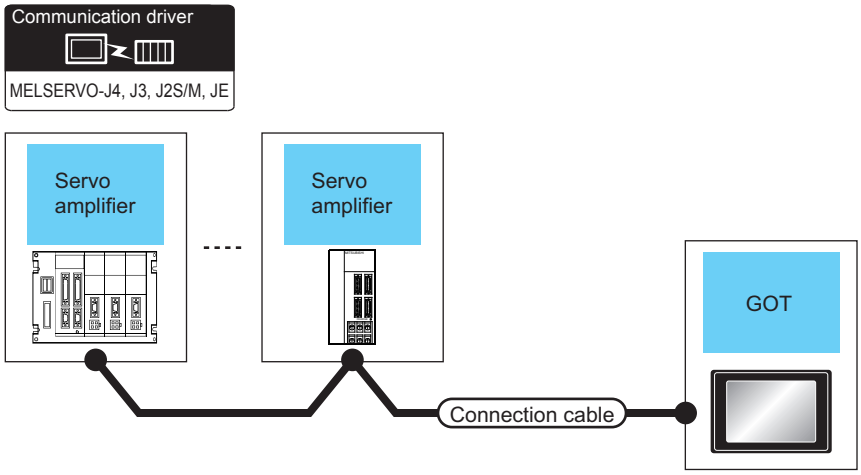

Servo amplifier*1		Connection cable		GOT		Number of connectable equipment
Model name	**Communication type**	**Connection diagram number**	**Max. distance**	**Option device*3**	**Model**	
MR-J2M-P8A*1 MR-J2M-□DU*1	RS-422	User preparing RS-422 connection diagram 1)	30m	- (Built into GOT)	GT27 GT25 GT23 GT21 07W GT21 05Q GS25 GS21	0 to 31 servo amplifiers for 1 GOT*2
				GT15-RS4-9S	GT27 GT25	
				GT10-C02H-9SC	GT21 04R GT21 03P 04P R4	
		User preparing RS-422 connection diagram 6)		- (Built into GOT)	GT21 04R GT21 03P 04P ET/R4 GT21 03P 04P R4	

*1 Connect the connector of the servo amplifier to CN3.
*2 Up to 10 servo amplifiers can be connected to GS21-W.
*3 GT25-W and GT2505-V do not support option devices.

Connection to the MELSERVO-J4, J3 Series

When connecting to one servo amplifier

Communication driver

MELSERVO-J4, J3, J2S/M, JE

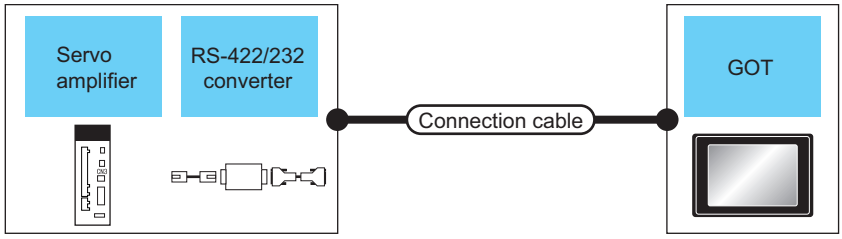

Servo amplifier*1			Connection cable		GOT		Number of connectable equipment
Model name	RS-422/232 interface converter RS-422/232 conversion cable	Communication type	Cable model Connection diagram number	Max. distance	Option device*5	Model	
MR-J4-□A*1 MR-J4-□A-RJ*1 MR-J3-□A*1 MR-J3-□T*1	DSV-CABV(1.5m)*2 or FA-T-RS40VS*3	RS-232	-	2.5m	- (Built into GOT)	GT27 GT25 GT23 GT21 07W GT21 05C GS25 GS21	1 GOT for 1 servo amplifier
					GT15-RS2-9P	GT27 GT25	
					GT10-C02H-6PT9P*4	GT21 03P 04P R4 GT21 03P 04P R2	
			User preparing RS-232 connection diagram 2)	15m	- (Built into GOT)	GT21 04R GT21 03P 04P R2	
	-	RS-422	User preparing RS-422 connection diagram 2)	30m	- (Built into GOT)	GT27 GT25 GT23 GT21 07W GT21 05C GS25 GS21	
					GT15-RS4-9S	GT27 GT25	
					GT10-C02H-9SC	GT21 04R GT21 03P 04P R4	
			User preparing RS-422 connection diagram 7)		- (Built into GOT)	GT21 04R GT21 03P 04P ET/R4 GT21 03P 04P R4	

16

*1 Connect the connector of the servo amplifier to CN3.
*2 DSV-CABV is a product manufactured by Diatrend Corporation. For details, contact Diatrend Corporation.
*3 FA-T-RS40VS is a product manufactured by MITSUBISHI ELECTRIC ENGINEERING COMPANY LIMITED. For details, contact MITSUBISHI ELECTRIC ENGINEERING COMPANY LIMITED.
The cables (RS-PCATCBL-0.5M(0.5m), RS-422SCBL-2M(2m)) are packed together.
Use the provided cables to connect devices.
* FA-T-RS40VS stopped being produced at the end of March, 2013. The replacement product is not produced.
*4 When a GT10-C02H-6PT9P unit of the sub version A or B is used, do not ground the case of the D-sub (9-pin) connector.
*5 GT25-W and GT2505-V do not support option devices.

When connecting to multiple servo amplifiers

■RS-232 connection

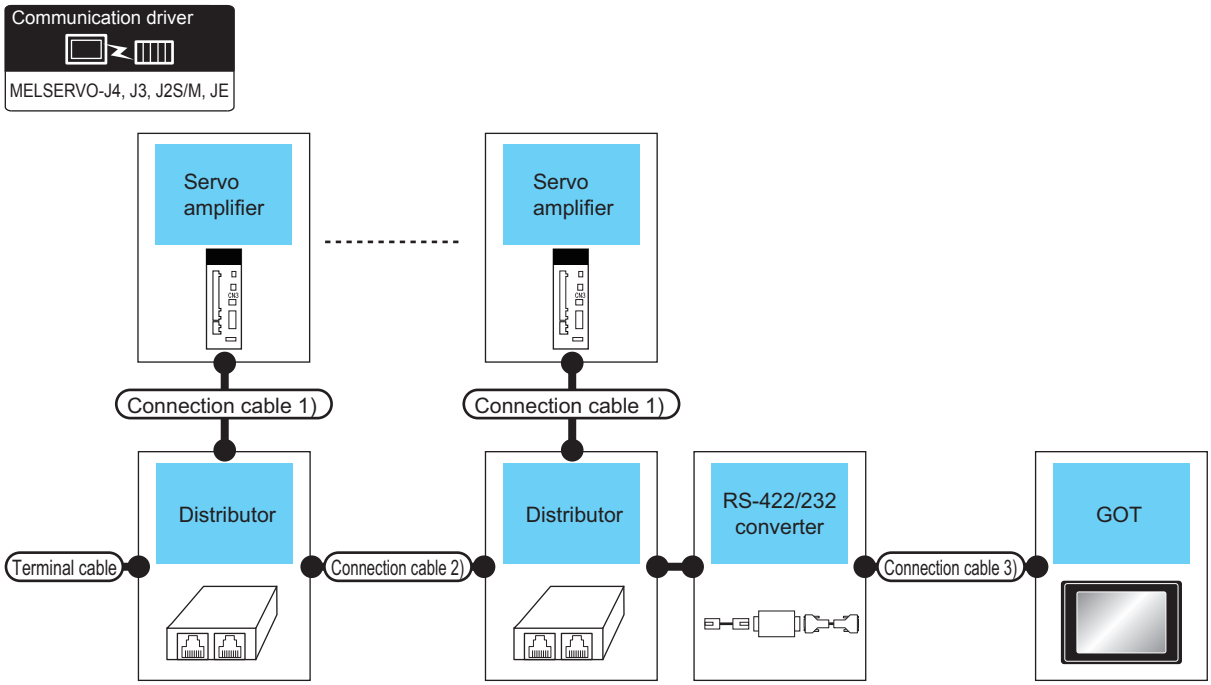

Servo amplifier*1	Terminating cable	Connection cable 1)	Distributor *3	Connection cable 2)	Distributor *3	RS-422/232 interface converter*2		Connection cable 3)	GOT		Max. distance	Number of connectable equipment
Model name	Connection diagram number	Connection diagram number	Model name	Connection diagram number	Model name	Model name	Communication type	Connection diagram number	Option device *6	Model		
MR-J4-□A*1 MR-J4-□A-RJ*1 MR-J3-□A*1 MR-J3-□T*1	User preparing RS-422 connection diagram 5)	User preparing RS-422 connection diagram 4)	BMJ-8 (Recommended)	User preparing RS-422 connection diagram 3)	BMJ-8 (Recommended)	FA-T-RS40VS	RS-232	-	- (Built into GOT)	GT27 GT25 GT23 GT21 07W GT21 05Q GS25 GS21	30m	Up to 32 servo amplifiers for 1 GOT*5
									GT15-RS2-9P	GT27 GT25		
									GT10-C02H-6PT9P*4	GT21 03P 04P R4 GT21 03P 04P R2		
								User preparing RS-232 connection diagram 2)	- (Built into GOT)	GT21 04R GT21 03P 04P R2		

*1 Connect the connector of the servo amplifier to CN3.
*2 FA-T-RS40VS is a product manufactured by MITSUBISHI ELECTRIC ENGINEERING COMPANY LIMITED. For detail of this product, contact MITSUBISHI ELECTRIC ENGINEERING COMPANY LIMITED.
The cables (RS-PCATCBL-0.5M(0.5m), RS-422SCBL-2M(2m)) are packed together.
Use the cables packed together to connect.
*3 The distributor is a product manufactured by HAKKO ELECTRIC CO., LTD. For details, contact HAKKO ELECTRIC CO., LTD.
*4 When a GT10-C02H-6PT9P unit of the sub version A or B is used, do not ground the case of the D-sub (9-pin) connector.
* FA-T-RS40VS stopped being produced at the end of March, 2013. The replacement product is not produced.
*5 Up to 10 servo amplifiers can be connected to GS21-W.
*6 GT25-W and GT2505-V do not support option devices.

■RS-422 connection

Communication driver

MELSERVO-J4, J3, J2S/M, JE

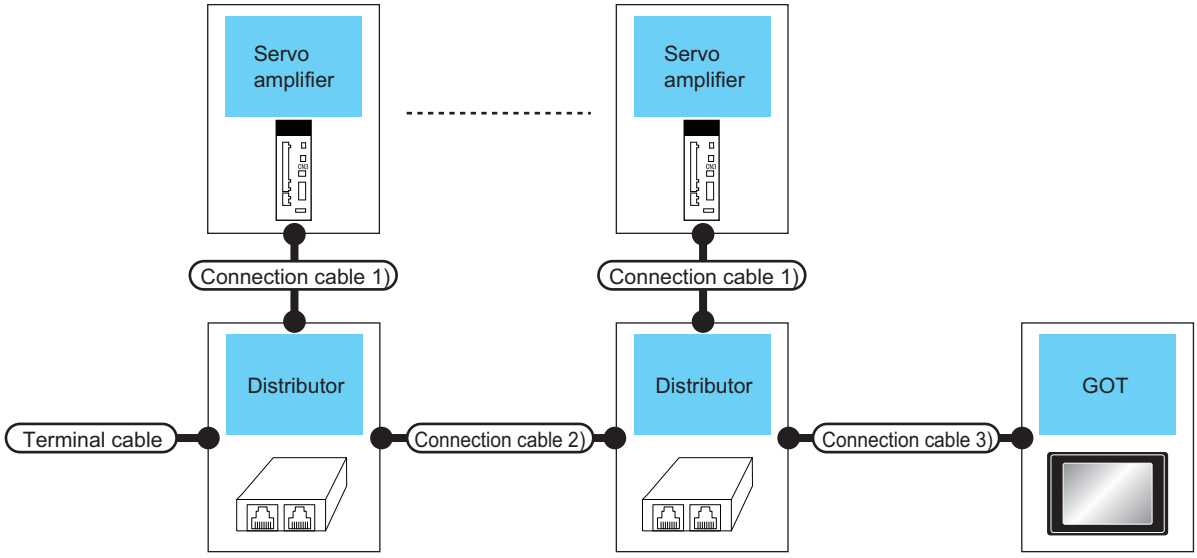

Servo amplifier*1		Terminating cable	Connection cable 1)	Distributor *2	Connection cable 2)	Distributor *2	Connection cable 3)	GOT		Max. distance	Number of connectable equipment
Model name	Communication type	Connection diagram number	Connection diagram number	Model name	Connection diagram number	Model name	Connection diagram number	Option device *4	Model		
MR-J4-□A*1 MR-J4-□A-RJ*1 MR-J3-□A*1 MR-J3-□T*1	RS-422	User preparing RS-422 connection diagram 5)	User preparing RS-422 connection diagram 4)	BMJ-8 (Recommended)	User preparing RS-422 connection diagram 3)	BMJ-8 (Recommended)	User preparing RS-422 connection diagram 2)	- (Built into GOT)	GT27 GT25 GT23 GT21 07W GT21 05Q GS25 GS21	30m	Up to 32 servo amplifiers for 1 GOT*3
								GT15-RS4-9S	GT27 GT25		
								GT10-C02H-9SC	GT21 04R GT21 03P 04P R4		
							User preparing RS-422 connection diagram 7)	- (Built into GOT)	GT21 04R GT21 03P 04P ET/R4 GT21 03P 04P R4		

*1 Connect the connector of the servo amplifier to CN3.
*2 The distributor is a product manufactured by HAKKO ELECTRIC CO., LTD. For details, contact HAKKO ELECTRIC CO., LTD.
*3 Up to 10 servo amplifiers can be connected to GS21-W.
*4 GT25-W and GT2505-V do not support option devices.

Connection to the MELSERVO-JE-□A Series

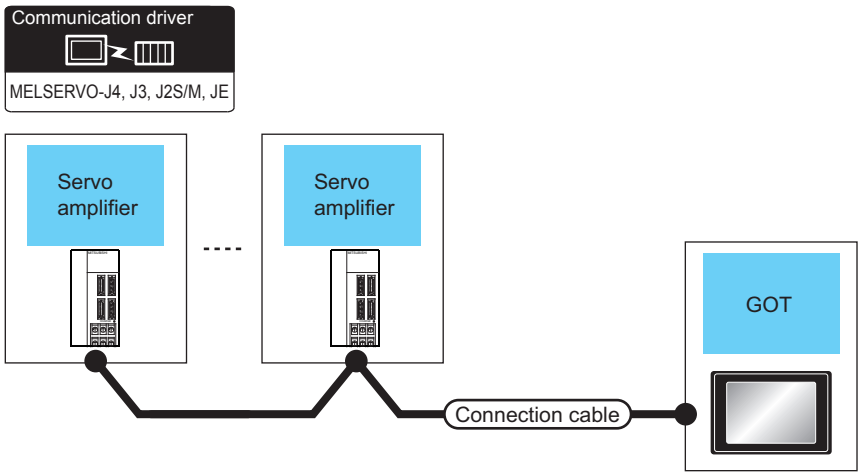

Servo amplifier*1		Connection cable	GOT		Max. distance	Number of connectable equipment
Model name	Communication type	Connection diagram number	Option device *2	Model		
MR-JE-□A*1	RS-422	User preparing RS-422 connection diagram 1)	- (Built into GOT)	GT27 GT25 GT23 GT21 07W GT21 05Q GS25 GS21	30m	Up to 32 servo amplifiers for 1 GOT (multi-drop communication) *3
			GT15-RS4-9S	GT27 GT25		
			GT10-C02H-9SC	GT21 04R GT21 03P 04P R4		
		User preparing RS-422 connection diagram 6)	- (Built into GOT)	GT21 04R GT21 03P 04P ET/R4 GT21 03P 04P R4		

*1 Connect the connector of the servo amplifier to CN1.
*2 GT25-W and GT2505-V do not support option devices.
*3 Up to 10 servo amplifiers can be connected to GS21-W.

Connection diagram

The following diagram shows the connection between the GOT and the servo amplifier.

RS-232 cable

■RS-232 connection diagram 1)

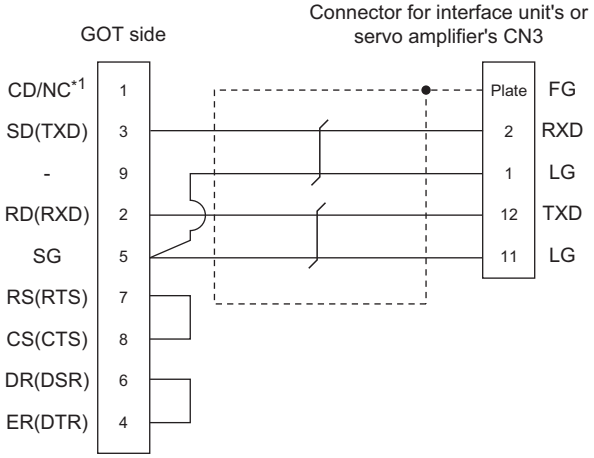

■RS-232 connection diagram 2)

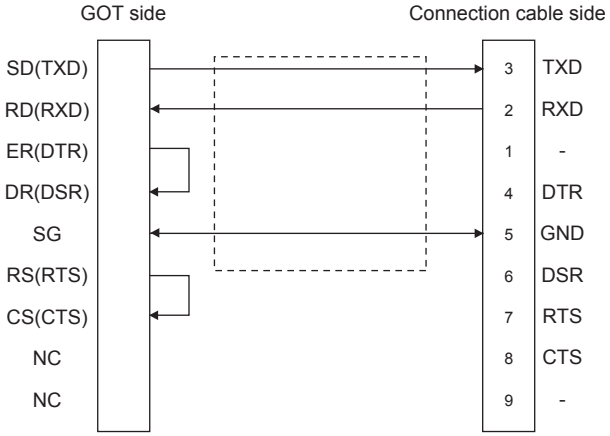

■RS-232 connection diagram 3)

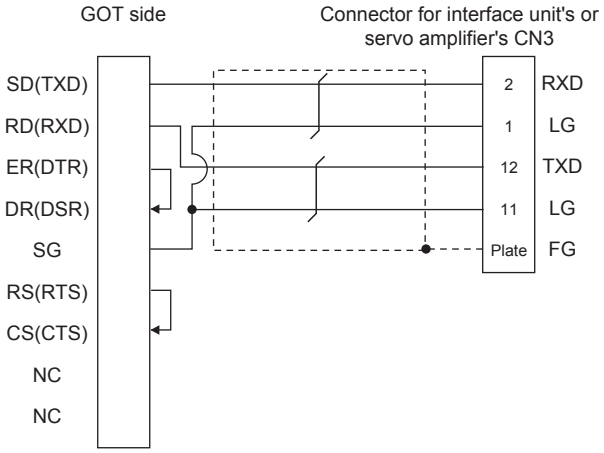

■Precautions when preparing cable

• Cable length

The length of the cable RS-232 must be 15m or less.

• GOT side connector

For the GOT side connector, refer to the following.

☞ Page 64 GOT connector specifications

RS-422 cable

■RS-422 connection diagram 1)

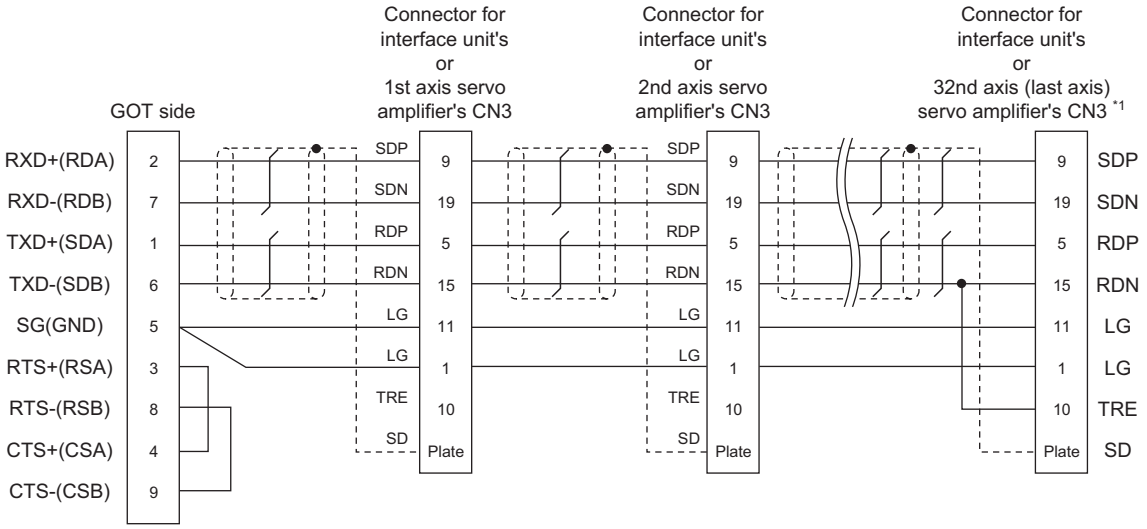

*1 At the last axis, connect TRE to RDN.

■RS-422 connection diagram 2)

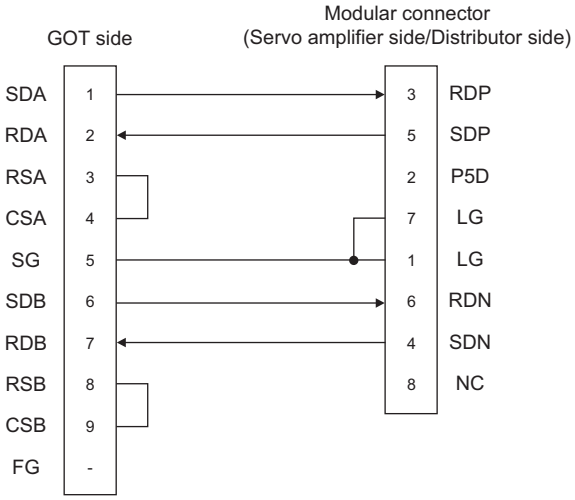

■RS-422 connection diagram 3)

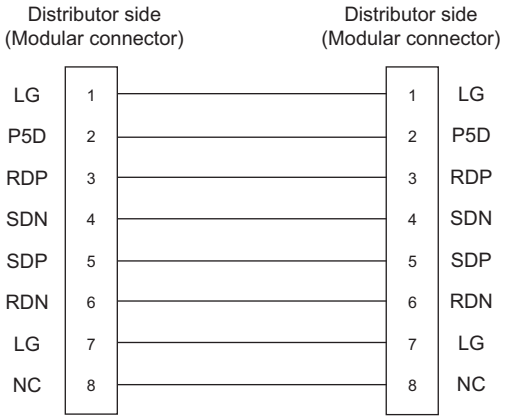

■RS-422 connection diagram 4)

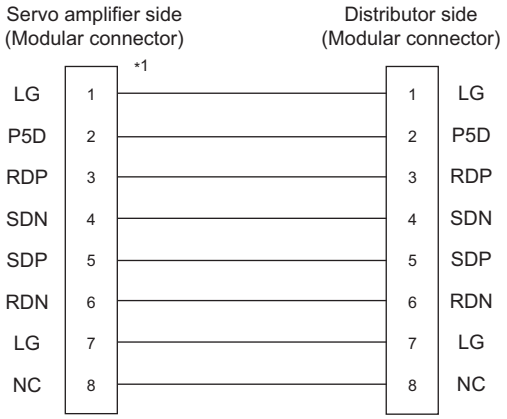

*1 Make the wiring between the distributor and servo amplifier as short as possible.

■RS-422 connection diagram 5)

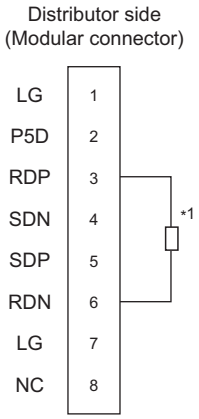

*1 Perform terminal processing on the part between RDP (3-pin) and RDN (6-pin) with a 150Ω resistor.

■RS-422 connection diagram 6)

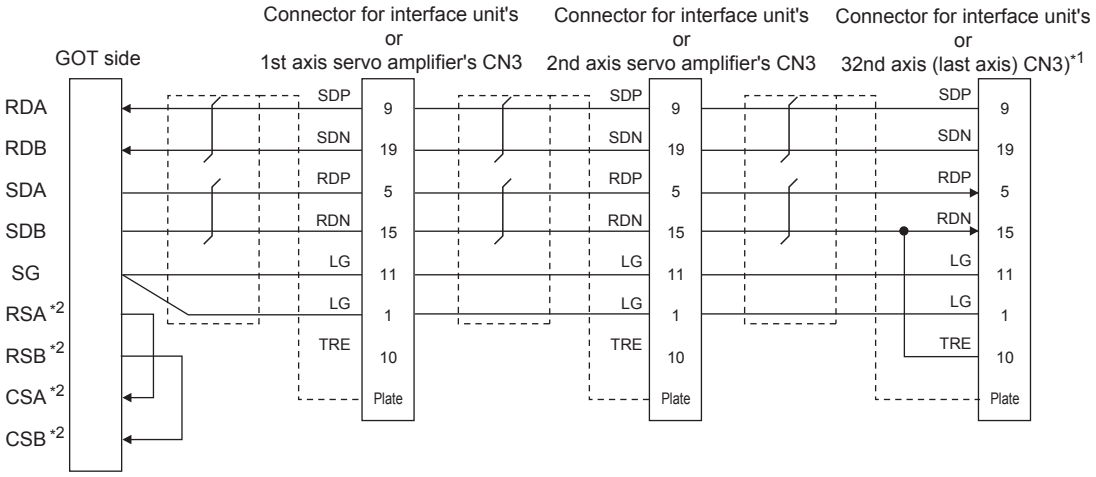

*1 At the last axis, connect TRE to RDN.

*2 The signals RSA, RSB, CSA, and CSB are not provided for GT2104-PMBD, GT2103-PMBD. Return connection is not required.

■RS-422 connection diagram 7)

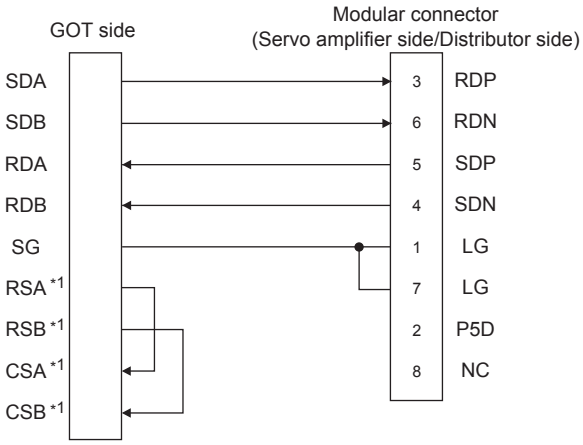

*1 The signals RSA, RSB, CSA, and CSB are not provided for GT2104-PMBD, GT2103-PMBD. Return connection is not required.

■Precautions when preparing cable

• Cable length

The length of the RS-422 cable must be 30m or less.

• GOT side connector

For the GOT side connector, refer to the following.

☞ Page 64 GOT connector specifications

• Servo amplifier connector

Use the connector compatible with the servo amplifier.

For details, refer to the following.

📖See the technical data of the servo amplifier to be used.

• Servo amplifier connector specifications

Pin layout in the Modular connector

When seen from the front of the servo amplifier
(receptacle side)

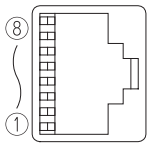

Modular jack

Pin No.	Signal name
1	LG
2	P5D
3	RDP
4	SDN
5	SDP
6	RDN
7	LG
8	NC

• Connector of cable between MELSERVO Series servo amplifiers

Name	Model name	Specifications	Manufacturer
Connector	TM10P-88P (Plug)	RJ45 connector	HIROSE ELECTRIC CO.,LTD.
Modular ceiling rosette (Distributor)	BMJ-8	-	HAKKO ELECTRIC CO.,LTD. TEL(03)-3806-9171
Cable	-	Cable conforming to EIA568 (such as cable 10BASE-T)	-

Use the commercial connectors and cables shown in the table below or the comparable products.

(Refer to the manual for the servo amplifier.)

■Connecting terminating resistors

When connecting a Servo Amplifier to the GOT, a terminating resistor must be connected to the GOT.

• For GT27, GT25 (except GT2505-V), GT23, GS25

Set the terminating resistor setting switch of the GOT main unit to disable.

• For GT2505-V, GT21, and GS21-W-N

Set the terminating resistor selector to 330 Ω.

• For GS21-W

Since the terminating resistor is fixed to 330 Ω, no setting is required for the terminating resistor.

For the procedure to set the terminating resistor, refer to the following.

☞ Page 68 Terminating resistors of GOT

GOT side settings

Setting communication interface (Controller Setting)

Set the channel of the connected equipment.

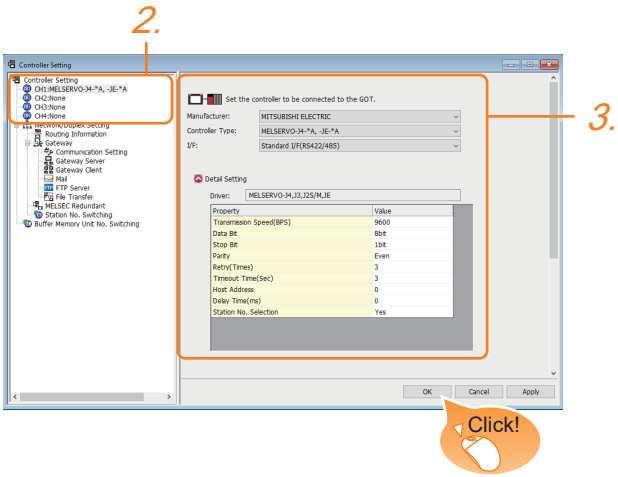

1. Select [Common] → [Controller Setting] from the menu.

2. In the [Controller Setting] window, select the channel No. to be used from the list menu.

3. Set the following items.

- [Manufacturer]: [MITSUBISHI ELECTRIC]
- [Controller Type]: Configure the setting according to the controller to be connected.
- [I/F]: Interface to be used
- [Detail Setting]: Configure the settings according to the usage environment.

☞ Page 948 Communication detail settings

4. When you have completed the settings, click the [OK] button.

Point

The settings of connecting equipment can be confirmed in [I/F Communication Setting].
For details, refer to the following.
☞ Page 54 I/F communication setting

Communication detail settings

Make the settings according to the usage environment.

Property	Value
Transmission Speed(BPS)	9600
Data Bit	8 bit
Stop Bit	1 bit
Parity	Even
Retry(Times)	3
Timeout Time(Sec)	3
Host Address	0
Delay Time(ms)	0
Station No. Selection	Yes

Item	Description	Range
Transmission Speed	Set this item when change the transmission speed used for communication with the connected equipment. (Default: 9600bps)	9600bps, 19200bps, 38400bps, 57600bps, 115200bps
Data Bit	Set this item when change the data length used for communication with the connected equipment. (Default: 8bit)	8bit (fixed)
Stop Bit	Specify the stop bit length for communications. (Default: 1bit)	1bit (fixed)
Parity	Specify whether or not to perform a parity check, and how it is performed during communication. (Default: Even)	Even (fixed)
Retry	Set the number of retries to be performed when a communication timeout occurs. (Default: 3times)	0 to 5times
Timeout Time	Set the time period for a communication to time out. (Default: 3sec)	1 to 30sec
Host Address	Specify the station number of the servo amplifier in the system configuration. (Default: 0)	0 to 31
Delay Time	Set this item to adjust the transmission timing of the communication request from the GOT. (Default: 0ms)	0 to 300 (ms)
Station No. Selection	Specify whether to use the station No. during communication. If [Yes] is selected, the station No. is fixed to "0." (Default: Yes)	Yes/No

Point

• Communication interface setting by Utility

The communication interface setting can be changed on the Utility's [Communication Settings] after writing [Controller Setting] of project data.

For details on the Utility, refer to the following manual.

📖GOT2000 Series User's Manual (Utility)

• Precedence in communication settings

When settings are made by GT Designer3 or the Utility, the latest setting is effective.

• Cutting the portion of multiple connection of the controller

By setting GOT internal device, GOT can cut the portion of multiple connection of the controller.

For example, faulty station that has communication timeout can be cut from the system.

For details of the setting contents of GOT internal device, refer to the following manual.

📖GT Designer3 (GOT2000) Screen Design Manual

Servo amplifier side settings

Model name	Refer to
MELSERVO-J2-Super Series	☞ Page 949 Connecting to the MELSERVO-J2-Super Series
MELSERVO-J2M Series	☞ Page 950 Connecting to the MELSERVO-J2M Series
MELSERVO-J4, J3, JE-□A, JE Series	☞ Page 951 Connecting to the MELSERVO-J4,J3, JE-□A Series

Connecting to the MELSERVO-J2-Super Series

Point

MELSERVO-J2-Super Series

For details of the MELSERVO-J2-Super Series, refer to the following manual.

☞ MELSERVO-J2-Super Series Servo Amplifier Instruction Manual

■Parameters of MELSERVO-J2-Super Series

Enter the parameters of the MELSERVO-J2-Super Series.

Item	Set value
Basic parameter No. 15	Station number setting: 0 to 31 (Default: 0)*1
Basic parameter No. 16	Serial communication function selection (Default: 0000) Basic parameter No. 16 (3) (2) 0 (1) (1)Serial communication baud rate selection*2 0: 9600bps 1: 19200bps 2: 38400bps 3: 57600bps (2)Serial communication I/F selection 0: RS-232 1: RS-422 (3)Communication response delay time selection 0: Invalid 1: Valid (Response after 800μs or longer delay)
In case of MR-J2S-□: Expansion parameter 2 No. 53 In case of MR-J2S-□CP: Expansion parameter 2 No. 57 In case of MR-J2S-□CL: Expansion parameter 2 No. 57	Function selection 8 (Default: 0000)*3 Expansion parameter 2 No. 53 or No. 57 0 (1) 0 0 (1)Station No. selection for protocol 0: With station No. 1: Without station No.

*1 Avoid duplication of the station No. with any of the other axes.

*2 Specify the same transmission speed as that of the GOT.
For the transmission speed setting on the GOT side, refer to the following.
☞ Page 947 GOT side settings

*3 To change the set value, enter "000E" to basic parameter No. 19.

Point

• Parameter setting

Set the parameter at the pushbutton switch provided on the operation section of the servo amplifier or setup software.

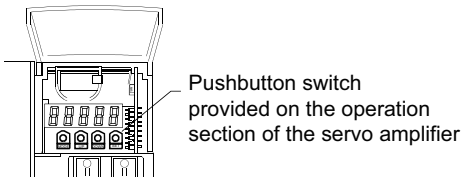

• When changing the parameter

Turn off then on the servo amplifier to be effective the new parameter.

Connecting to the MELSERVO-J2M Series

Point

MELSERVO-J2M Series

For details of the MELSERVO-J2M Series, refer to the following manual.

MELSERVO-J2M Series Servo Amplifier Instruction Manual

■Parameter of MELSERVO-J2M Series

Enter the parameters of the MELSERVO-J2M Series.

Item	Set value
Basic IFU parameter No. 0	Serial communication function selection (Default: 0000) Basic IFU parameter No. 0 (3) (2) 0 (1) (1)Serial communication baud rate selection*1 0: 9600bps 1: 19200bps 2: 38400bps 3: 57600bps (2)Serial communication I/F selection 0: RS-232 1: RS-422 (3)Communication response delay time selection 0: Invalid 1: Valid (Response after 800μs or longer delay)
Basic IFU parameter No. 10	Interface unit serial communication station No. selection: 0 to 31 (Default: 0) *2
Basic IFU parameter No. 11	Slot 1 serial communication station No. selection: 0 to 31 (Default: 1) *2
Basic IFU parameter No. 12	Slot 2 serial communication station No. selection: 0 to 31 (Default: 2) *2
Basic IFU parameter No. 13	Slot 3 serial communication station No. selection: 0 to 31 (Default: 3) *2
Basic IFU parameter No. 14	Slot 4 serial communication station No. selection: 0 to 31 (Default: 4) *2
Basic IFU parameter No. 15	Slot 5 serial communication station No. selection: 0 to 31 (Default: 5) *2
Basic IFU parameter No. 16	Slot 6 serial communication station No. selection: 0 to 31 (Default: 6) *2
Basic IFU parameter No. 17	Slot 7 serial communication station No. selection: 0 to 31 (Default: 7) *2
Basic IFU parameter No. 18	Slot 8 serial communication station No. selection: 0 to 31 (Default: 8) *2

*1 Specify the same transmission speed as that of the GOT.
For the transmission speed setting on the GOT side, refer to the following.
☞ Page 947 GOT side settings

*2 Avoid duplication of the station No. with any of the other units.

Point

• Parameter setting

Set the parameter at the pushbutton switch provided on the operation section of the servo amplifier or setup software.

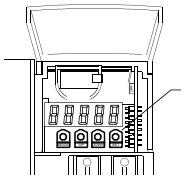

• When changing the parameter

Turn off then on the servo amplifier to be effective the new parameter.

Connecting to the MELSERVO-J4,J3, JE-□A Series

Point

MELSERVO-J4, J3, JE-□A Series

For details of the MELSERVO-J4, J3, JE Series, refer to the following manual.

📖MELSERVO-J4, J3, JE Series Servo Amplifier Instruction Manual

■Parameters of MELSERVO-J4, J3, JE-□A Series

Enter the parameters of the MELSERVO-J4, J3, JE Series.

Item	Set value
Basic parameter No. PC20	Station number setting: 0 to 31 (Default: 0)*1
Basic parameter No. PC21	Serial communication function selection (Default: 0000) Basic parameter No. PC21 [ ][(2)][(1)][ ] (1)Serial communication baud rate selection*2 0: 9600bps 1: 19200bps 2: 38400bps 3: 57600bps 4: 115200bps (2)Communication response delay time selection 0: Invalid 1: Valid (Response after 800μs or longer delay)

*1 Avoid duplication of the station No. with any of the other axes.

*2 Specify the same transmission speed as that of the GOT.
For the transmission speed setting on the GOT side, refer to the following.
☞ Page 947 GOT side settings

Point

• Parameter setting

Set the parameter at the pushbutton switch provided on the operation section of the servo amplifier or setup software.

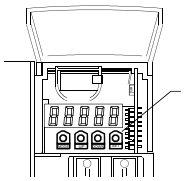

• When changing the parameter

Turn off then on the servo amplifier to be effective the new parameter.

Station number setting

Set each station number so that no station number overlaps.
The station number can be set without regard to the cable connection order. There is no problem even if station numbers are not consecutive.

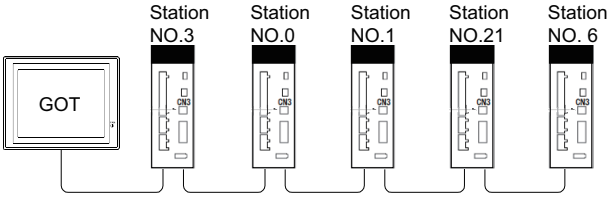

Examples of station number setting

Direct specification

When setting the device, specify the station number of the servo amplifier of which data is to be changed.

Specification range
0 to 31

Indirect specification

When setting the device, indirectly specify the station number of the inverter of which data is to be changed using the 16-bit GOT internal data register (GD10 to GD25).
When specifying the station No. from 100 to 115 on GT Designer3,the value of GD10 to GD25 compatible to the station No.specification will be the station No.of the servo amplifier.

Specification station NO.	Compatible device	Setting range
100	GD10	0 to 31 For the setting other than the above, a communication timeout error will occur.
101	GD11	
102	GD12	
103	GD13	
104	GD14	
105	GD15	
106	GD16	
107	GD17	
108	GD18	
109	GD19	
110	GD20	
111	GD21	
112	GD22	
113	GD23	
114	GD24	
115	GD25	

All station specification

Target station differs depending on write-in operation or read-out operation.

- For write-in operation, all station will be a target.
- For read-out operation, only one station will be a target.

16.3 Ethernet Connection

Connection to the MELSERVO-J5 or JET series

When connecting a servo amplifier and PLC or Motion module by the CC-Link IE TSN connection

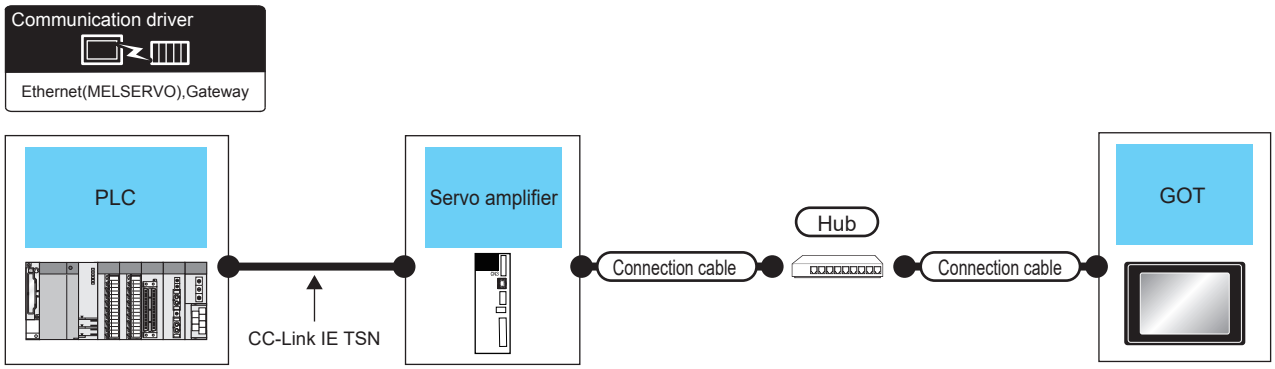

Controller	Communication type	Connection cable		External device	Connection cable		GOT		Number of connectable equipment
		Cable model	Maximum segment length*2		Cable model	Maximum segment length*2	Option device*3	GOT Model	
MR-J5-□G MR-J5-□G-RJ MR-J5W2-□G MR-J5W3-□G MR-J5D1-□G4 MR-J5D2-□G4 MR-J5D3-□G4 MR-JET-□G	Ethernet	• 1000BASE-T Double-shielded twisted pair cable (STP) or twisted pair cable: Category 5e or higher	100 m	Hub*1	• 100BASE-TX Shielded twisted pair cable (STP) or unshielded twisted pair cable (UTP) of category 5 or higher	100 m	- (Built into GOT)	GT27 GT25 GT23 GT21 07W GT21 04R GT21 03P 04P ET/R4 GS25 GS21	1 GOT for 1 servo amplifier
							GT25-J71E71-100	GT27 GT25	

*1 Use a hub to connect the servo amplifier.
Use cables, connectors, and hubs that meet the IEEE802.3 1000BASE-T standard.

*2 Length between a hub and a node
The maximum length depends on the Ethernet equipment used.
When switching hubs are used, the cascade connection between the switching hubs has no logical limit for the number of cascades.
For the limit, contact the switching hub manufacturer.

*3 GT25-W and GT2505-V do not support option devices.

When connecting servo amplifiers and PLC by the CC-Link IE Field Network Basic connection

■Direct connection to a servo amplifier

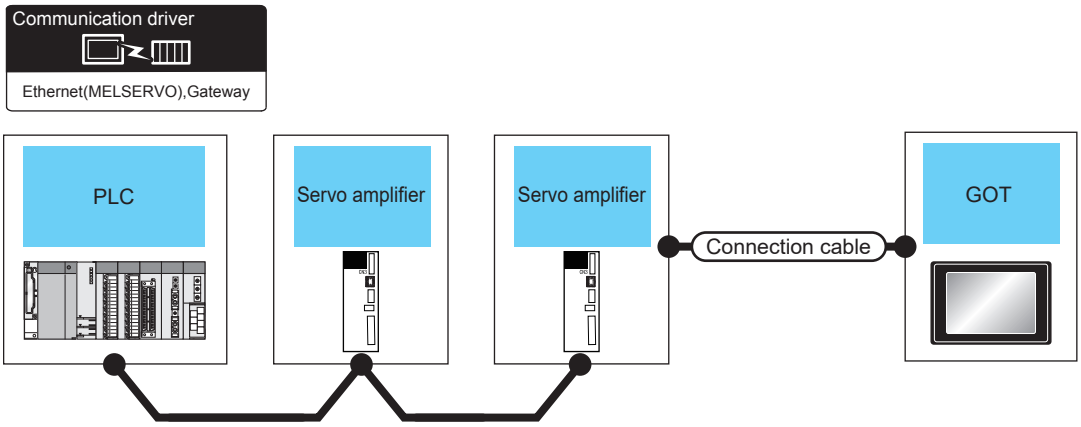

PLC		Connection cable	Maximum segment length*1	GOT		Number of connectable equipment
Model name	Communication type			Option device*2	Model	
MR-J5-□G MR-J5-□G-RJ MR-J5D1-□G4 MR-JET-□G	Ethernet	• 100BASE-TX Shielded twisted pair cable (STP) or unshielded twisted pair cable (UTP) of category 5 or higher	100 m	- (Built into GOT)	GT27 GT25 GT23 GT21 07W GT21 04R GT21 03P 04P ET/R4 GS25 GS21	1 GOT for 1 servo amplifier
				GT25-J71E71-100	GT27 GT25	

*1 Length between a hub and a node
The maximum length depends on the Ethernet equipment used.
The following shows the number of the connectable nodes when a repeater hub is used.
• 100BASE-TX: UP to 2 nodes for a cascade connection (205 m)
When switching hubs are used, the cascade connection between the switching hubs has no logical limit for the number of cascades.
For the limit, contact the switching hub manufacturer.

*2 GT25-W and GT2505-V do not support option devices.

■Connection via a hub

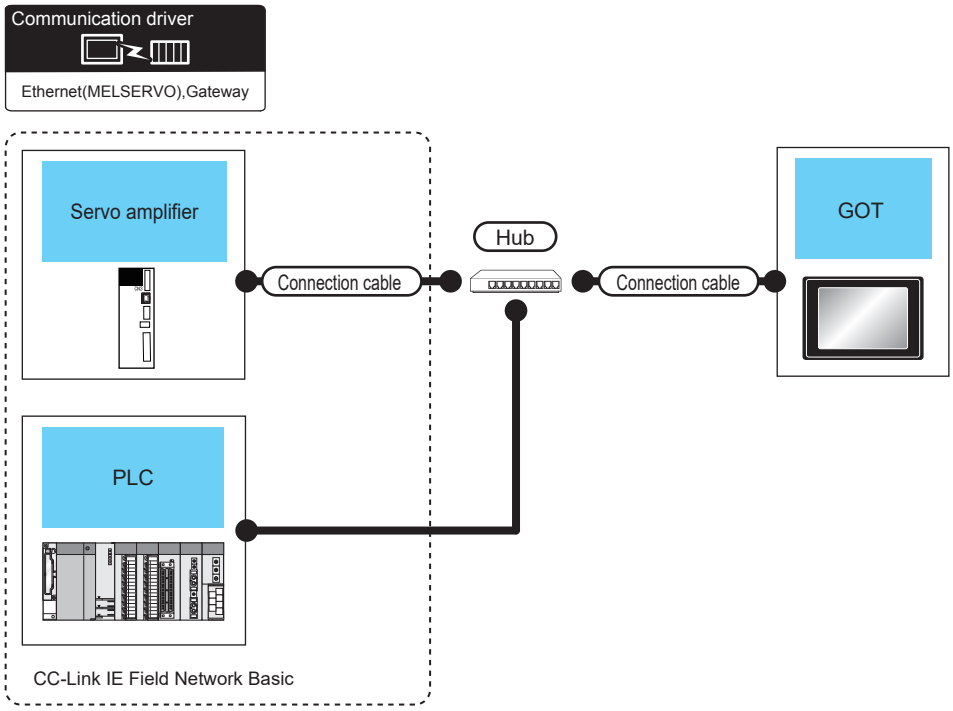

Controller	Communication type	Connection cable		External device	Connection cable		GOT		Number of connectable equipment
		Cable model	Maximum segment length*2		Cable model	Maximum segment length*2	Option device*3	GOT Model	
MR-J5-□G MR-J5-□G-RJ MR-J5D1-□G4 MR-JET-□G	Ethernet	• 100BASE-TX Shielded twisted pair cable (STP) or unshielded twisted pair cable (UTP) of category 5 or higher	100 m	Hub*1	• 100BASE-TX Shielded twisted pair cable (STP) or unshielded twisted pair cable (UTP) of category 5 or higher	100 m	- (Built into GOT)	GT27 GT25 GT23 GT21 07W GT21 04R GT21 03P 04P ET/R4 GS25 GS21	1 GOT for 1 servo amplifier
							GT25-J71E71-100	GT27 GT25	

*1 Use a hub to connect the servo amplifier.
Use cables, connectors, and hubs that meet the IEEE802.3 100BASE-TX standard.

*2 Length between a hub and a node
The maximum length depends on the Ethernet equipment used.
The following shows the number of the connectable nodes when a repeater hub is used.
• 100BASE-TX: UP to 2 nodes for a cascade connection (205 m)
When switching hubs are used, the cascade connection between the switching hubs has no logical limit for the number of cascades.
For the limit, contact the switching hub manufacturer.

*3 GT25-W and GT2505-V do not support option devices.

Connection to the MELSERVO-JE-C Series

When connecting to one servo amplifier

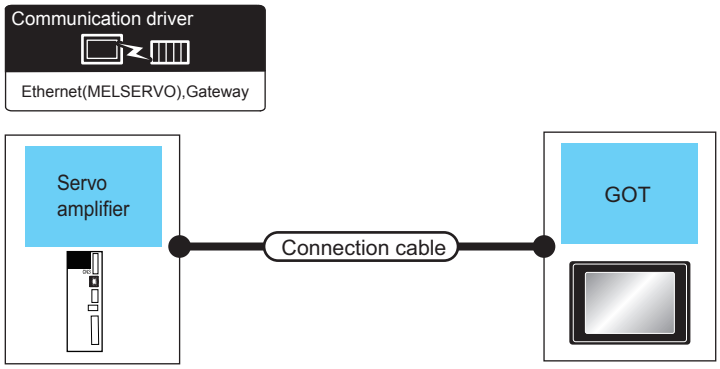

PLC		Connection cable*1*2	Maximum segment length*3	GOT		Number of connectable equipment
Model name	Communication type			Option device*4	Model	
MR-JE-C	Ethernet	• 100BASE-TX Shielded twisted pair cable (STP) or unshielded twisted pair cable (UTP) of category 5 or higher	100 m	- (Built into GOT)	GT27 GT25 GT23 GT21.07W GT21.04R GT21.03P 10.4P ET/R4 GS25 GS21	1 GOT
				GT25-J71E71-100	GT27 GT25	

*1 The connection destination of the twisted pair cable differs depending on the configuration of the Ethernet network system to be used. Connect to the Ethernet module, hub, transceiver, the wireless LAN adapter (NZ2WL-JPA, NZ2WL-JPS) or other system equipment corresponding to the applicable Ethernet network system.
Use cables, connectors, and hubs that meet the IEEE802.3 100BASE-TX standard.
For the controller to which the wireless LAN adapter can be connected and the setting method of the wireless LAN adapter, refer to the manual of the wireless LAN adapter.

*2 When connecting Servo amplifier and GOT directly with Ethernet cable, remember that the by cross cable is available.
GOT2000 Series User's Manual (Hardware)

*3 Length between a hub and a node
The maximum length depends on the Ethernet equipment used.
The following shows the number of the connectable nodes when a repeater hub is used.
• 100BASE-TX: UP to 2 nodes for a cascade connection (205 m)
When switching hubs are used, the cascade connection between the switching hubs has no logical limit for the number of cascades.
For the limit, contact the switching hub manufacturer.

*4 GT25-W and GT2505-V do not support option devices.

When connecting to multiple servo amplifiers

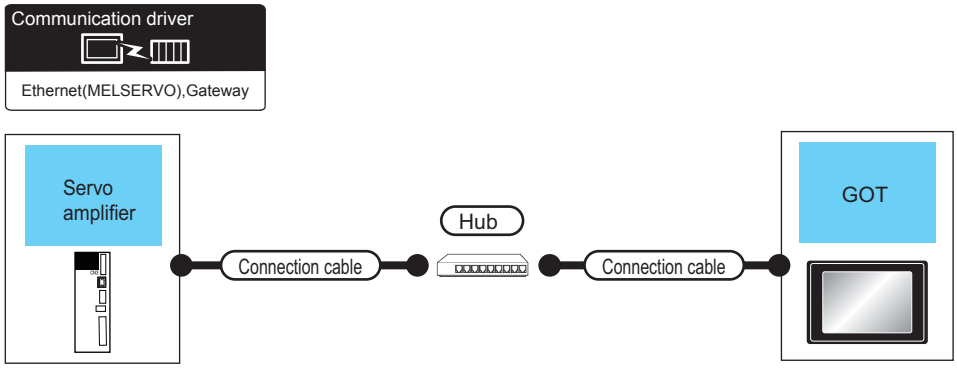

Controller	Communication type	Connection cable		External device	Connection cable		GOT		Number of connectable equipment
		Cable model*3	Maximum segment length*3		Cable model*3	Maximum segment length*2	Option device*5	GOT Model	
MR-JE-C	Ethernet	• 100BASE-TX Shielded twisted pair cable (STP) or unshielded twisted pair cable (UTP) of category 5 or higher	100 m	Hub*1	• 100BASE-TX Shielded twisted pair cable (STP) or unshielded twisted pair cable (UTP) of category 5 or higher	100 m	- (Built into GOT)	GT27 GT25 GT23 GT21 07W GT21 04R GT21 03P 04P ET/R4 GS25 GS21	When servo amplifier:GOT is N:1 128 or less servo amplifiers for one GOT When servo amplifier:GOT is 1:N The following number of GOTs for one servo amplifierDepends on MELSERVO-JE-C*4
							GT25-J71E71-100	GT27 GT25	

*1 Use a hub to connect the servo amplifier.
Use cables, connectors, and hubs that meet the IEEE802.3 100BASE-TX standard.

*2 Length between a hub and a node
The maximum length depends on the Ethernet equipment used.
The following shows the number of the connectable nodes when a repeater hub is used.
• 100BASE-TX: UP to 2 nodes for a cascade connection (205 m)
When switching hubs are used, the cascade connection between the switching hubs has no logical limit for the number of cascades.
For the limit, contact the switching hub manufacturer.

*3 Use the straight cable for the twisted pair cable.

*4 For details, refer to the manual of MELSERVO-JE-C.
One GOT is recommended to connect to MELSERVO-JE-C.

*5 GT25-W and GT2505-V do not support option devices.

GOT side settings

Setting communication interface (Controller Setting)

Set the channel of the connected equipment.

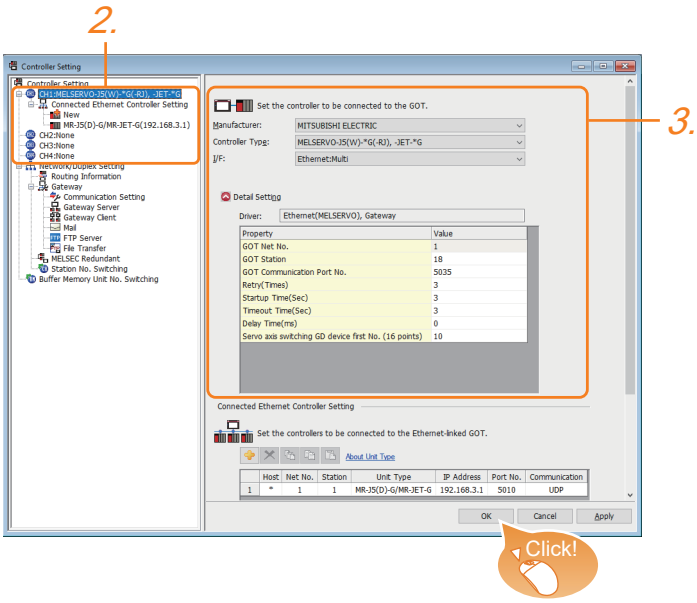

1. Select [Common] → [Controller Setting] from the menu.

2. In the [Controller Setting] window, select the channel No. to be used from the list menu.

3. Set the following items.

- [Manufacturer]: [MITSUBISHI ELECTRIC]
- [Controller Type]: Select one of the following items according to the controller to be connected.

[MELSERVO-J5(W)-*G(-RJ), -JET-*G]

[MELSERVO-JE-*C]

- [I/F]: Interface to be used
- [Detail Setting]: Configure the settings according to the usage environment.

☞ Page 948 Communication detail settings

4. When you have completed the settings, click the [OK] button.

Point

The settings of connecting equipment can be confirmed in [I/F Communication Setting].
For details, refer to the following.
☞ Page 54 I/F communication setting

Communication detail settings

Make the settings according to the usage environment.

Property	Value
GOT Net No.	1
GOT Station	18
GOT Communication Port No.	5035
Retry(Times)	3
Startup Time(Sec)	3
Timeout Time(Sec)	3
Delay Time(ms)	0
Servo axis switching GD device first No. (16 points)	10

Item	Description	Range
GOT Net No.	Set the network No. of the GOT. 1 (fixed)	1 (fixed)
GOT Station*1	Set the station No. of the GOT. (Default: 18)	1 to 254
GOT Communication Port No.	Set the GOT port No. for the connection with the Servo amplifier. (Default: 5035)	1024 to 5010, 5014 to 65534 (Except for 5011 to 5013, 49153 to 49170)
Retry	Set the number of retries to be performed when a communication timeout occurs. When receiving no response after retries, the communication times out. (Default: 3times)	0 to 5times
Startup Time	Specify the time period from the GOT startup until GOT starts the communication with the Servo amplifier. (Default: 3sec)	3 to 255sec
Timeout Time	Set the time period for a communication to time out. (Default: 3sec)	1 to 90sec
Delay Time	Set the delay time for reducing the load of the network/destination PLC. (Default: 0ms)	0 to 10000(ms)
Servo axis switching GD device first No. (16 points) *2	Set the servo axis switching GD device first No. (Default: 10) For the details, refer to the following. ☞ Page 960 Servo axis switching GD device first No.	<For GT27, GT25, GT23, GS25> 0 to 65520 <For GT21, GS21> 0 to 2032

*1 Set different values for [GOT Station] of [Detail Setting] and [Station] of [Connected Ethernet Controller Setting].
☞ Page 961 Connected Ethernet Controller Setting

*2 MR-JE-C is not supported.

■Servo axis switching GD device first No.

• Indirect specification of the servo axis No.

In a connection via a Motion CPU or Simple Motion module, a servo axis No. can be indirectly specified with GOT internal registers (GD devices) by specifying a value (100 to 115) to the axis No. of the servo amplifier device.

Set the start device number of the GD devices to be used in [Servo axis switching GD device first No. (16 points)].

Specify a servo axis number with 16 consecutive GD devices, starting the set device number.

When [10] is set to [Servo axis switching GD device first No. (16 points)], GD10 to GD25 are used to specify a servo axis number as shown in the following table.

Servo axis No.	GD device	Setting range
100	GD10	1 to 64 Setting an invalid value causes a device range error.
101	GD11	
102	GD12	
103	GD13	
104	GD14	
105	GD15	
106	GD16	
107	GD17	
108	GD18	
109	GD19	
110	GD20	
111	GD21	
112	GD22	
113	GD23	
114	GD24	
115	GD25	

• Specifying a servo axis number with a device on the initially-displayed screen

Set [Servo axis switching GD device first No. (16 points)] so that the values of the GD devices are retained and monitored upon the GOT startup.

• Specifying a servo axis number with a device in a multi-channel connection

If the setting rage of [Servo axis switching GD device first No. (16 points)] set in each channel overlaps, the axis No. of the servo amplifier of each channel is switched simultaneously.

Set [Servo axis switching GD device first No. (16 points)] for each channel so that the setting range does not overlap.

• Specifying a station number and a servo axis number with devices in a multi-channel connection

When GD10 to GD25 are used to specify the station No. of an inverter or non-Mitsubishi temperature controller connected, setting [10] to [Servo axis switching GD device first No. (16 points)] switches the axis No. of the servo amplifier and the station No. of an inverter or non-Mitsubishi temperature controller set to each channel simultaneously.

Set [Servo axis switching GD device first No. (16 points)] so that the setting range does not overlap the station No. of an inverter or non-Mitsubishi temperature controller.

GOT Ethernet Setting

The GOT can be connected to a different network by configuring the following setting.

■GOT IP address setting

Set the following communication port setting.

- Standard port (When using GT25-W or GS25: Port 1)
- Extended port (When using GT25-W or GS25: Port 2)

■GOT Ethernet common setting

Set the following setting which is common to the standard port and the extended port, or port 1 and port 2.

- [Default Gateway]
- [Peripheral S/W Communication Port No.]
- [Transparent Port No.]

■IP filter setting

By configuring the IP filter setting, the access from the specific IP address can be permitted or shut off.

For the detailed settings, refer to the following manual.

☞ Page 50 GOT Ethernet Setting

Connected Ethernet Controller Setting

■When the model is [MELSERVO-J5(W)-*G(-RJ), -JET-*G]

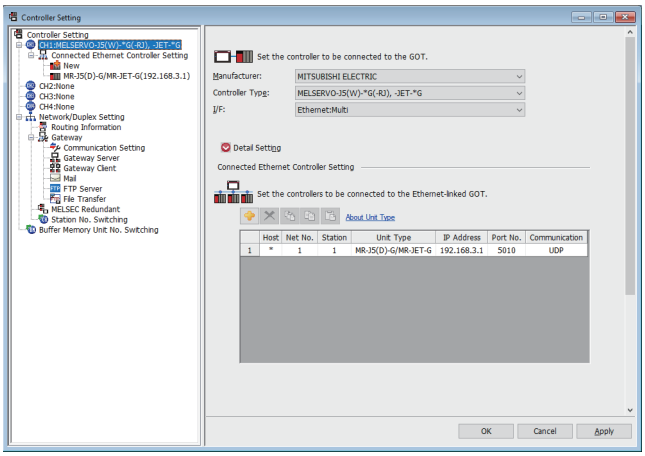

Item	Description	Range
Host	The host is displayed. (The host is indicated with an asterisk (*))	—
Net No. *1	Set the network No. of the connected Servo amplifier. 1 (fixed)	1 (fixed)
Station*1*2	Set the station No. of the connected Servo amplifier. (Default: 1)	1 to 254
Unit Type	MR-J5(D)-G/MR-JET-G (fixed)	MR-J5(D)-G/MR-JET-G (fixed)
IP address	Set the IP address of the connected Servo amplifier. (Default: 192.168.3.1)	0.0.0.1 to 255.255.255.254 *3
Port No.	Set the port No. of the connected Servo amplifier. 5010 (fixed)	5010 (fixed)
Communication	UDP (fixed)	UDP (fixed)

*1 [Net No.] and [Station] should match [Network No.] and [Station No.] set for the monitoring target device.

*2 Set different values for [GOT Station] of [Detail Setting] and [Station] of [Connected Ethernet Controller Setting].
☞ Page 959 Communication detail settings

*3 Since [0.0.0.0] and [255.255.255.255] cannot be set in the servo amplifier, set the IP address within the range of [0.0.0.1] to [255.255.255.254].
When [0.0.0.0] or [255.255.255.255] is set, a communication error occurs.

■When the model is [MELSERVO-JE-*C]

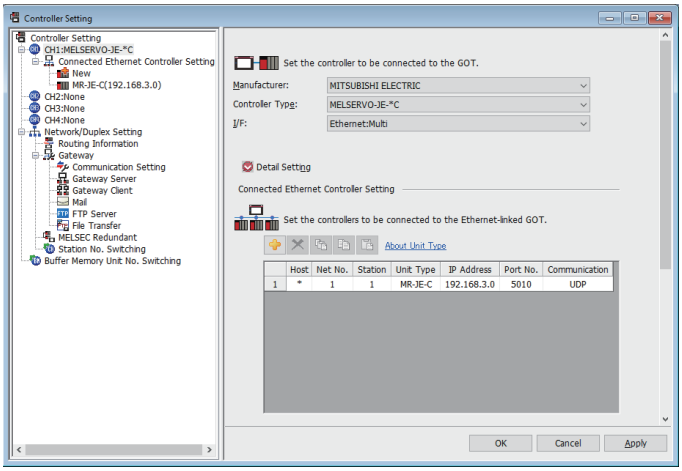

Item	Description	Range
Host	The host is displayed. (The host is indicated with an asterisk (*))	—
Net No.	Set the network No. of the connected Servo amplifier. 1 (fixed)	1 (fixed)
Station*1	Set the station No. of the connected Servo amplifier. (Default: 1)	1 to 254
Unit Type	MR-JE-C (fixed)	MR-JE-C (fixed)
IP address	Set the IP address of the connected Servo amplifier. (Default: 192.168.3.0)	0.0.0.0 to 255.255.255.255
Port No./Communication	Set the port No. of the connected Servo amplifier. (Default: 5010) Communication format differs depending on the port No. to be set. • When the port No. is [5010], the communication is [UDP] (fixed). • When the port No. is [5012], the communication is [TCP] (fixed).	

*1 Set different values for [GOT Station] of [Detail Setting] and [Station] of [Connected Ethernet Controller Setting].
☞ Page 959 Communication detail settings

Point

• Communication interface setting by the Utility

The communication interface setting can be changed on the Utility's [Communication setting]after writing [Controller Setting] of project data.

For details on the Utility, refer to the following manual.

📖GOT2000 Series User's Manual (Utility)

• Precedence in communication settings

When settings are made by GT Designer3 or the Utility, the latest setting is effective.

Point

[Connected Ethernet Controller Setting] for GT21 and GS21

• Effective range of [Connected Ethernet Controller Setting]

Only [1] to [4] of [Connected Ethernet Controller Setting] can be used for GT21 and GS21.

If [5] onwards are used, the settings are invalid on GT21 or GS21.

• [Host] setting

Set [Host] within the range from [1] to [4] in [Connected Ethernet Controller Setting].

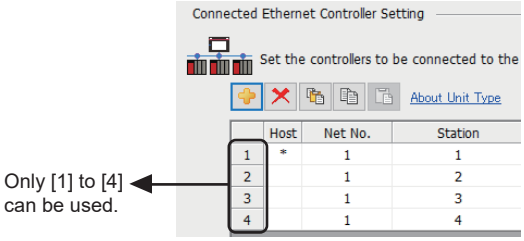

16

Servo amplifier side settings

This section describes the settings of the GOT and servo amplifier in the following system configuration.

Point

- Servo amplifier

For the details of the servo amplifier, refer to the following.

Manual of the MELSERVO-J5

Manual of the MELSERVO-JET

Manual of the MELSERVO-JE-C

Connection to MELSERVO-J5 or JET series

■System configuration

The following shows a system configuration example for connection to the MELSERVO-J5 series.

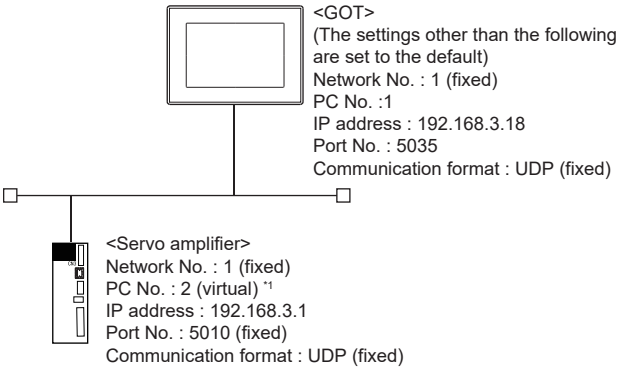

*1 Although the setting is nonexistent on the servo amplifier side, set a virtual value on the GOT side.
☞ Page 966 [Controller Setting] and [Connected Ethernet Controller Setting] of GT Designer3

■IP address setting

The following shows an example of servo amplifier settings for connection to the MELSERVO-J5 series.

- [Network basic] of MR Configurator2

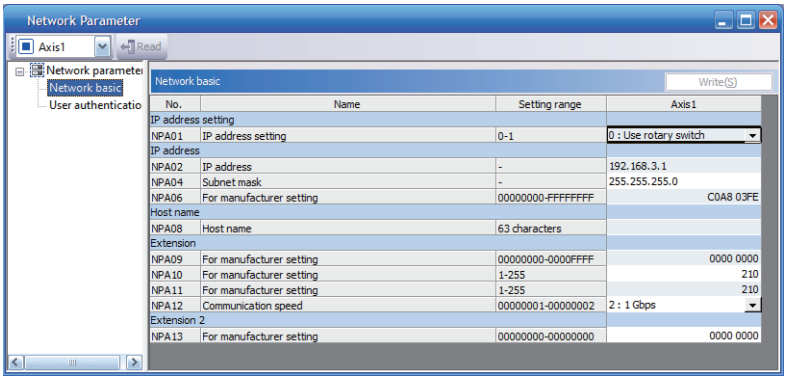

Setting item	Description	Setting value
[NPA01]	Select whether to set the IP address with the rotary switches or parameter. The following shows the IP address when the rotary switches are used. • First octet to third octet: Values set in [NPA02] • Fourth octet: Values set with the rotary switches SW1 and SW2 When the parameter is used, the values set in [NPA02] are used as the IP address.	0: Use rotary switch 1: Use parameter
[NPA02]	Set the IP address.	192.168.3.1 (Default)
[NPA04]	Set the subnet mask.	255.255.255.0 (Default)

- IP address setting

Setting value of [NPA01]	Rotary switch (SW1, SW2)	IP address	
0 : Use rotary switch	00h	First octet	The first octet set in [NPA02] is used.
		Second octet	The second octet set in [NPA02] is used.
		Third octet	The third octet set in [NPA02] is used.
		Fourth octet	The fourth octet set in [NPA02] is used.
	01h to FEh	First octet	The first octet set in [NPA02] is used.
		Second octet	The second octet set in [NPA02] is used.
		Third octet	The third octet set in [NPA02] is used.
		Fourth octet	The setting values of the rotary switches (SW1 and SW2) are used.
	FFh	First octet	Use prohibited
		Second octet	
		Third octet	
		Fourth octet	
1 : Use parameter	—	First octet	The first octet set in [NPA02] is used.
		Second octet	The second octet set in [NPA02] is used.
		Third octet	The third octet set in [NPA02] is used.
		Fourth octet	The fourth octet set in [NPA02] is used.

■[Controller Setting] and [Connected Ethernet Controller Setting] of GT Designer3

The following shows an example of GOT settings for connection to the MELSERVO-J5 series.

• Controller Setting

Item	Set value
GOT Net No.	1
GOT Station	1
GOT Communication Port No.	5035
Retry	3 times
Startup Time	3 sec
Timeout Time	3 sec
Delay Time	0 ms

• GOT Ethernet Setting (standard port)

Item	Set value
GOT IP Address	192.168.3.18
Subnet Mask	255.255.255.0
Default Gateway	0.0.0.0
Peripheral Communication Port No.	5015
Transparent Port No.	5014

• Connected Ethernet Controller Setting

Item		Set value
Ethernet setting No.1	Host	*
	Net No.	1 (fixed)
	Station	2*1
	Unit Type	MR-J5(D)-G/MR-JET-G
	IP address	192.168.3.1
	Port No.	5010
	Communication	UDP

*1 Set a value different from that of GOT PLC No.

■Checking the communication status of the servo amplifier

• When using the Windows Command Prompt

Execute a Ping command at the Command Prompt of Windows.

1) At normal communication

C:\>Ping 192.168.3.1

Reply from 192.168.3.1:bytes=32 time<1ms TTL=32

2) At abnormal communication

C:\>Ping 192.168.3.1

Request timed out.

• At abnormal communication

At abnormal communication, check the followings and execute the Ping command again.

Cable connecting condition

Confirmation of switch and network parameter setting

Operation state of PLC CPU (faulty or not)

IP address of servo amplifier Ethernet port specified by Ping command

When connecting to MELSERVO-JE-C (when connecting to GOT and one servo amplifier)

■System configuration

The following shows a system configuration example for connection to the MELSERVO-JE-C series.

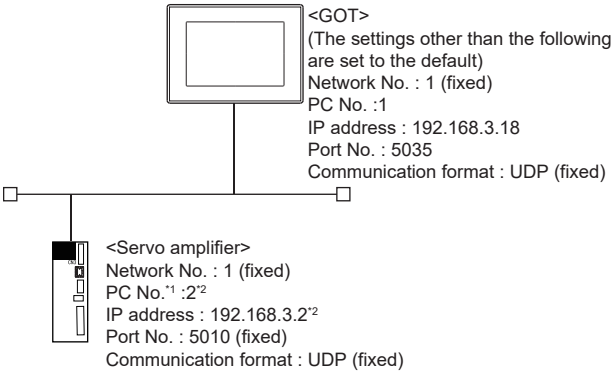

*1 PC No. corresponds to "Identification number" on the servo amplifier side.

*2 The fourth octet of IP address follows PC No. (Identification number).

■Setting of the identification number and IP address on the servo amplifier side

The following shows an example of servo amplifier settings for connection to the MELSERVO-JE-C series.

Set the identification number of the servo amplifier using the rotary switch SW1 and SW2 in front of the servo amplifier.

The fourth octet of IP address follows the identification number of the servo amplifier.

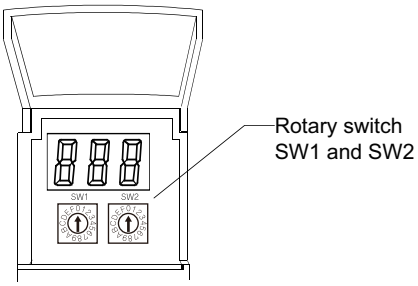

Setting item	Setting range	Range
Identification number	01_H to FE_H	02_H
First octet*1	192 (Default)	192 (Default)
Second octet*1	168 (Default)	168 (Default)
Third octet*1	3 (Default)	3 (Default)
Fourth octet	1 to 254 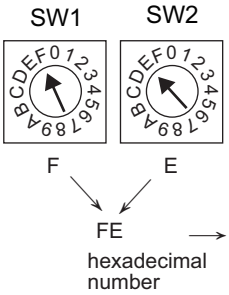 The value of the identification number converted from the hexadecimal number to the decimal number is the value of the fourth octet of IP address on the servo amplifier side.	2 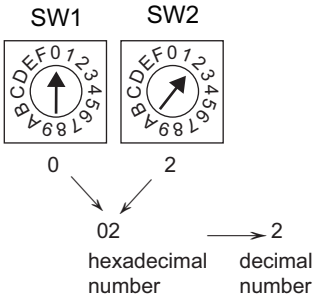

*1 Cannot be set by the rotary switch SW1 and SW2.

■[Controller Setting] and [Connected Ethernet Controller Setting] of GT Designer3

The following shows an example of GOT settings for connection to the MELSERVO-JE-C series.

• Controller Setting

Item	Set value
GOT Net No.	1
GOT Station	1
GOT Communication Port No.	5035
Retry	3 times
Startup Time	3 sec
Timeout Time	3 sec
Delay Time	0 ms

• GOT Ethernet Setting (standard port)

Item	Set value
GOT IP Address	192.168.3.18
Subnet Mask	255.255.255.0
Default Gateway	0.0.0.0
Peripheral Communication Port No.	5015
Transparent Port No.	5014

• Connected Ethernet Controller Setting

Item		Set value
Ethernet setting No.1	Host	*
	Net No.	1 (fixed)
	Station	2*1
	Unit Type	MR-JE-C
	IP address	192.168.3.2
	Port No.*2	5010
	Communication*2	UDP

*1 Set a value different from that of GOT PLC No.

*2 The following [Port No.] and [Communication format] can also be set.
[Port No.]: 5012
[Communication]: TCP

■Checking the communication status of the servo amplifier

• When using the Windows Command Prompt

Execute a Ping command at the Command Prompt of Windows.

1) At normal communication

C:\>Ping 192.168.3.2

Reply from 192.168.3.2:bytes=32 time<1ms TTL=32

2) At abnormal communication

C:\>Ping 192.168.3.2

Request timed out.

• At abnormal communication

At abnormal communication, check the followings and execute the Ping command again.

Cable connecting condition

Confirmation of switch and network parameter setting

Operation state of PLC CPU (faulty or not)

IP address of servo amplifier Ethernet port specified by Ping command

When connecting to MELSERVO-JE-C (when connecting to GOT and multiple servo amplifiers)

■System configuration

The following shows a system configuration example for connection to the MELSERVO-JE-C series.

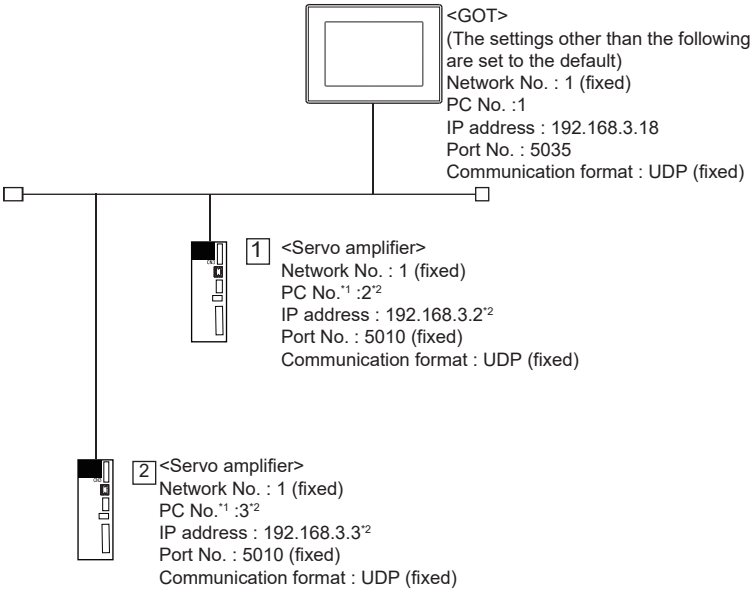

*1 PC No. corresponds to "Identification number" on the servo amplifier side.

*2 The fourth octet of IP address follows PC No. (Identification number).

■Setting of the identification number and IP address on the servo amplifier side

The following shows an example of servo amplifier settings for connection to the MELSERVO-JE-C series.

Set the identification number of the servo amplifier using the rotary switch SW1 and SW2 in front of the servo amplifier.

The fourth octet of IP address follows the identification number of the servo amplifier.

For details of the setting method, refer to the following.

☞ Page 967 When connecting to MELSERVO-JE-C (when connecting to GOT and one servo amplifier)

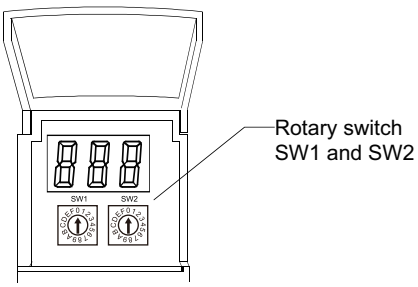

Setting item	Set value	
	1	2
Identification number	02_H	03_H
First octet*1	192 (Default)	192 (Default)
Second octet*1	168 (Default)	168 (Default)
Third octet*1	3 (Default)	3 (Default)
Fourth octet	2	3

*1 Cannot be set by the rotary switch SW1 and SW2.

■[Controller Setting] and [Connected Ethernet Controller Setting] of GT Designer3

The following shows a setting example on the GOT side for connecting to the MELSERVO-JE-C series.

• Controller Setting

Item	Set value
GOT Net No.	1
GOT Station	1
GOT Communication Port No.	5035
Retry	3 times
Startup Time	3 sec
Timeout Time	3 sec
Delay Time	0 ms

• GOT Ethernet Setting (standard port)

Item	Set value
GOT IP Address	192.168.3.18
Subnet Mask	255.255.255.0
Default Gateway	0.0.0.0
Peripheral Communication Port No.	5015
Transparent Port No.	5014

• Connected Ethernet Controller Setting

Item		Set value	
		1	2
Ethernet setting No.1	Host	*	-
	Net No.	1 (fixed)	1 (fixed)
	Station	2*1	3*1
	Unit Type	MR-JE-C	MR-JE-C
	IP address	192.168.3.2	192.168.3.3
	Port No.*2	5010	5010
	Communication*2	UDP	UDP

*1 Set a value different from that of GOT PLC No.

*2 The following [Port No.] and [Communication format] can also be set.
[Port No.]: 5012
[Communication]: TCP

■Checking the communication status of the servo amplifier

• When using the Windows Command Prompt

Execute a Ping command at the Command Prompt of Windows.

1) At normal communication

C:\>Ping 192.168.3.2

Reply from 192.168.3.2:bytes=32 time<1ms TTL=32

2) At abnormal communication

C:\>Ping 192.168.3.2

Request timed out.

• At abnormal communication

At abnormal communication, check the followings and execute the Ping command again.

Cable connecting condition

Confirmation of switch and network parameter setting

Operation state of PLC CPU (faulty or not)

IP address of servo amplifier Ethernet port specified by Ping command

Point

Communication setting other than identification number setting by the rotary switch SW1 and SW2

Communication setting can also be set by the following method other than identification number setting by the rotary switch SW1 and SW2.

- Method for using SLMP command (IP Address Set)
- Method for using MR Configurator2

For details, refer to the following manual.

Manual of the MELSERVO-JE-C

16.4 Connection through a PLC

Connection to MELSERVO-J4 series

When connecting the GOT and servo amplifiers through a motion controller or simple motion module

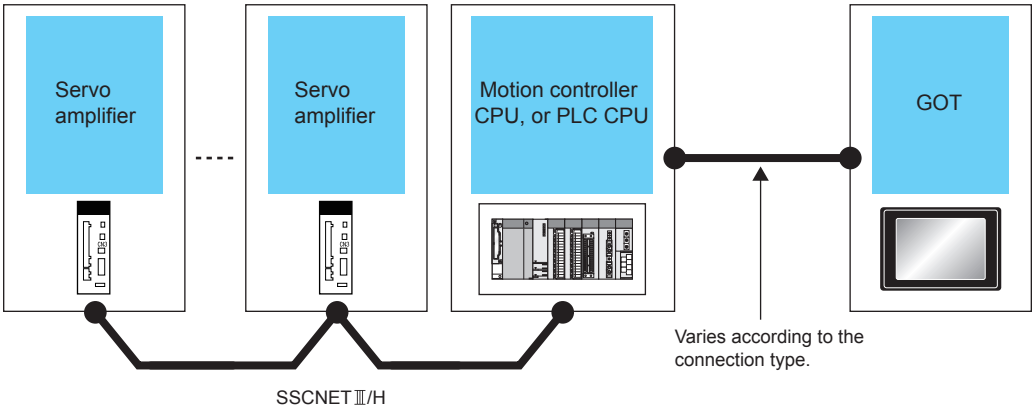

Servo amplifier		Motion controller CPU, or PLC			GOT		Number of connectable equipment
Model name	Communication type	Simple motion module or master/local module	CPU type	Communication type*1	Option device *5	Model	
MR-J4-□B MR-J4-□B-RJ MR-J4W2-□B MR-J4W3-□B	SSCNETIII/H	-	RnMT Q17nDS Q170MS	For the system configuration between the GOT and the motion controller or PLC, refer to the following. ☞ Page 217 ETHERNET CONNECTION ☞ Page 375 DIRECT CPU CONNECTION (SERIAL) ☞ Page 439 SERIAL COMMUNICATION CONNECTION ☞ Page 493 BUS CONNECTION ☞ Page 541 MELSECNET/H, MELSECNET/10 CONNECTION (PLC TO PLC NETWORK) ☞ Page 595 CC-Link IE TSN CONNECTION ☞ Page 625 CC-Link IE CONTROLLER NETWORK CONNECTION ☞ Page 665 CC-Link IE FIELD NETWORK CONNECTION ☞ Page 695 CC-Link CONNECTION (INTELLIGENT DEVICE STATION) ☞ Page 783 CC-Link CONNECTION (Via G4)	*2	*2	*3
		RD77MS2 RD77MS4 RD77MS8 RD77MS16	RnCPU				
		QD77MS2 *4 QD77MS4 *4 QD77MS16 *4	QnCPU				
		LD77MS2 LD77MS4 LD77MS16	LnCPU				
		FX5-40SSC-S FX5-80SSC-S*6	FX5CPU				

*1 The connection type depends on the CPU model.
☞ [System Configuration] section in each chapter

*2 The option devices and GOT models depend on the connection type.
☞ [System Configuration] section in each chapter

*3 The numbers of connectable devices below depend on the connection type.
☞ [System Configuration] section in each chapter
• Number of GOTs connectable to one motion controller or PLC
• Number of motion controllers or PLCs connectable to one GOT

*4 Use a module with the upper five digits later than 12042.

*5 GT25-W, GT2505-V, and GS25 do not support options.

*6 Use a module with its software version 1.004 or later.

When connecting the GOT and servo amplifiers through a simple motion module or CC-Link IE field network master/local module

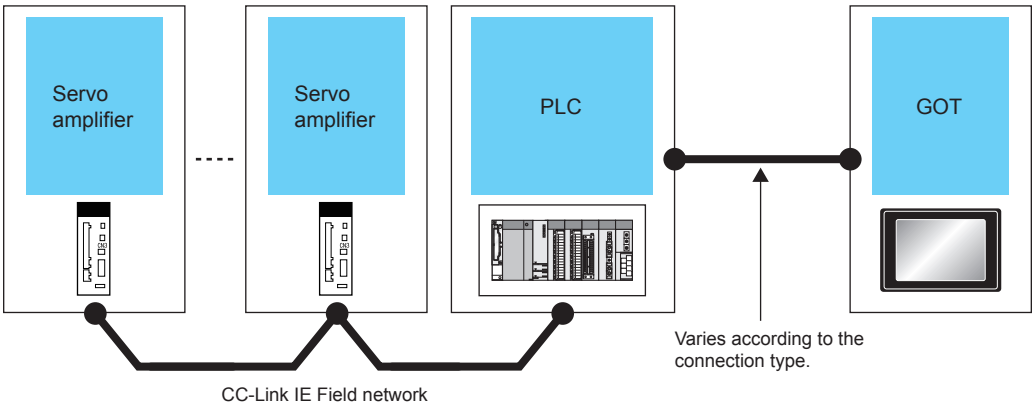

Servo amplifier		PLC			GOT		Number of connectable equipment
Model name	Communication type	Simple motion module or master/local module	CPU type	Communication type*1	Option device*6	Model	
MR-J4-□GF MR-J4-□GF-RJ	CC-Link IE Field network*4	RD77GF4*5 RD77GF8*5 RD77GF16*5 RD77GF32	RCPU	For the system configuration between the GOT and the PLC, refer to the following. ☞ Page 217 ETHERNET CONNECTION *7 ☞ Page 375 DIRECT CPU CONNECTION (SERIAL) ☞ Page 439 SERIAL COMMUNICATION CONNECTION ☞ Page 493 BUS CONNECTION ☞ Page 541 MELSECNET/H, MELSECNET/10 CONNECTION (PLC TO PLC NETWORK) *7 ☞ Page 595 CC-Link IE TSN CONNECTION *7 ☞ Page 625 CC-Link IE CONTROLLER NETWORK CONNECTION *7 ☞ Page 665 CC-Link IE FIELD NETWORK CONNECTION *4	*2	*2	*3
		QD77GF4*5 QD77GF8*5 QD77GF16*5	QCPU				
		RnENCPU	RCPU				
		RJ71EN71 RJ71GF11-T2	RCPU				
		QJ71GF11-T2*5	QCPU				
		LJ71GF11-T2*5	LCPU				

*1 The connection type depends on the CPU model.
☞ [System Configuration] section in each chapter

*2 The option devices and GOT models depend on the connection type.
☞ [System Configuration] section in each chapter

*3 The numbers of connectable devices below depend on the connection type.
☞ [System Configuration] section in each chapter
- Number of GOTs connectable to one PLC
- Number of PLCs connectable to one GOT

*4 When connecting the GOT and PLC using the CC-Link IE Field Network connection and then connecting a servo amplifier, connect the servo amplifier through a CC-Link IE Field Network master/local module (master station).
In this case, a different network will be accessed, so the routing must be set.

*5 Use the following version or later.

Simple motion module or master/local module	Motion mode	I/O mode
RD77GF4, RD77GF8, RD77GF16	Software version [01] or later	Software version [02] or later
RD77GF32	From first product	From first product
QD77GF4, QD77GF8, QD77GF16	From first product	First 5 digits of serial No. 18022 or higher
QJ71GF11-T2	-	First 5 digits of serial No. 14102 or higher
LJ71GF11-T2	-	First 5 digits of serial No. 14102 or higher

*6 GT25-W, GT2505-V, and GS25 do not support options.

*7 To monitor other networks, routing parameter setting is necessary.
For the routing parameter setting, refer to the following.
☞ Routing parameter setting described in each chapter

Connection to MELSERVO-J5 or JET series

When connecting the GOT to a servo amplifier through a Motion controller or Simple Motion module

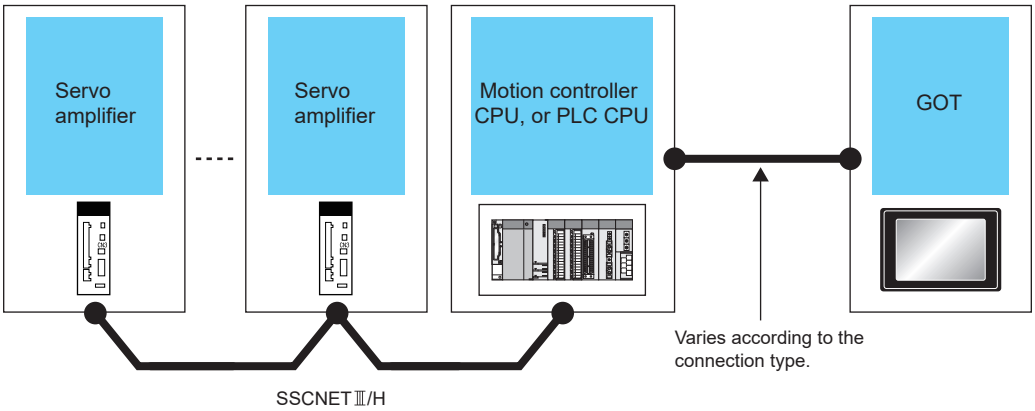

Servo amplifier		Motion controller CPU, or PLC			GOT		Number of connectable equipment
Model name	Communication type	Simple Motion module	CPU type	Communication type*1	Option device *6	Model	
MR-J5-□B MR-J5-□B-RJ MR-J5W2-□B MR-J5W3-□B	SSCNETIII/H	-	RnMT Q17nDS*5 Q170MS	For the system configuration between the GOT and the motion controller or PLC, refer to the following. ☞ Page 217 ETHERNET CONNECTION ☞ Page 375 DIRECT CPU CONNECTION (SERIAL) ☞ Page 439 SERIAL COMMUNICATION CONNECTION ☞ Page 493 BUS CONNECTION ☞ Page 541 MELSECNET/H, MELSECNET/10 CONNECTION (PLC TO PLC NETWORK) ☞ Page 595 CC-Link IE TSN CONNECTION ☞ Page 625 CC-Link IE CONTROLLER NETWORK CONNECTION ☞ Page 665 CC-Link IE FIELD NETWORK CONNECTION ☞ Page 695 CC-Link CONNECTION (INTELLIGENT DEVICE STATION) ☞ Page 783 CC-Link CONNECTION (Via G4)	*2	*2	*3
		RD77MS2 RD77MS4 RD77MS8 RD77MS16	RnCPU				
		QD77MS2*4 QD77MS4*4 QD77MS16*4	QnCPU				

*1 The connection type depends on the CPU model.
☞ [System Configuration] section in each chapter
*2 The option devices and GOT models depend on the connection type.
☞ [System Configuration] section in each chapter
*3 The numbers of connectable devices below depend on the connection type.
☞ [System Configuration] section in each chapter
• Number of GOTs connectable to one motion controller or PLC
• Number of motion controllers or PLCs connectable to one GOT
*4 Use a module that has a serial number starting with 23092 or later.
*5 Use a module with OS software version 00Y or later.
*6 GT25-W, GT2505-V, and GS25 do not support options.

When connecting the GOT and servo amplifiers through a Motion module

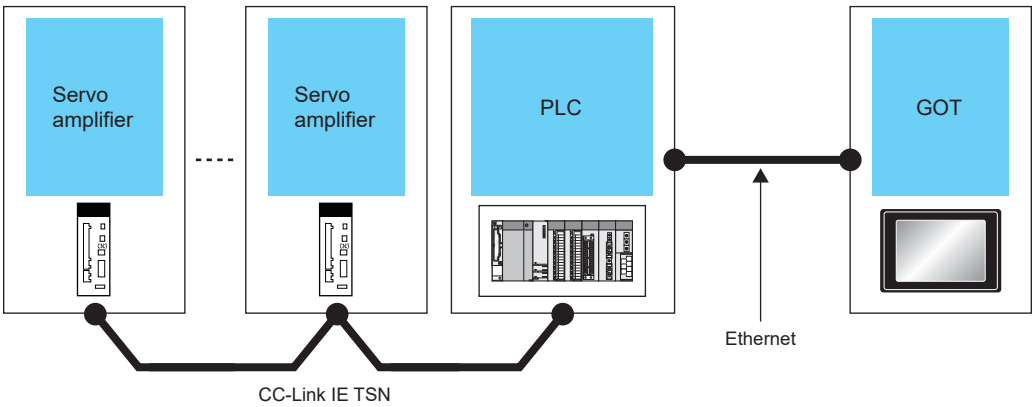

Servo amplifier		PLC			GOT		Number of connectable equipment
Model name	Communication type	Motion module*5	CPU type	Communication type	Option device*4	Model	
MR-J5-□G MR-J5-□G-RJ MR-J5W2-□G MR-J5W3-□G MR-J5D1-□G4 MR-J5D2-□G4 MR-J5D3-□G4 MR-JET-□G	CC-Link IE TSN	RD78G4 RD78G8 RD78G16 RD78G32 RD78G64 RD78GHV RD78GHW	RnCPU*1 RnENCPU*1 R12CCPU-V*1	For the system configuration between the GOT and the PLC, refer to the following. ☞ Page 234 Connection to Built-in Ethernet port CPU or C Controller module *3	- (Built into GOT)	GT27 GT25 GT23 GT21 GT21 GT21 GS25 GS21	1 GOT for 1 motion module
					GT25-J71E71-100	GT27 GT25	
		FX5-40SSC-G FX5-80SSC-G	FX5U*2 FX5UC*2	For the system configuration between the GOT and the PLC, refer to the following. ☞ Page 234 Connection to Built-in Ethernet port CPU or C Controller module *3	- (Built into GOT)	GT27 GT25 GT23 GT21 GT21 GT21 GS25 GS21	1 GOT for 1 motion module
					GT25-J71E71-100	GT27 GT25	

*1 Select either of the following for [Unit Type] in [Connected Ethernet Controller Setting] in GT Designer3.
- For RnCPU and RnENCPU: [RCPU]
- For R12CCPU-V: [RnCCPU/RnWCPU]

Set either of the following values for [Port No.] according to the communication method.
- UDP: [5006]
- TCP: [5007]

For [Connected Ethernet Controller Setting] in GT Designer3, refer to the following.
☞ Page 255 Connected Ethernet controller setting

*2 Select [FX5CPU] for [Unit Type] in [Connected Ethernet Controller Setting] in GT Designer3.
For [Connected Ethernet Controller Setting] in GT Designer3, refer to the following.
☞ Page 255 Connected Ethernet controller setting

*3 To monitor other networks, routing parameter setting is necessary.
For the routing parameter setting, refer to the following.
☞ Page 260 Routing parameter setting

*4 GT25-W and GT2505-V do not support option devices.

*5 When monitoring a servo amplifier through a Motion module, the available mode on the servo amplifier varies depending on the firmware version of the Motion module to be used.
The following shows the details.

Motion module	Motion mode	Simple Motion mode
RD78G4 RD78G8 RD78G16	From the first product	Firmware version 16 or later
RD78G32 RD78G64	From the first product	Unavailable
RD78GHV RD78GHW	From the first product	Unavailable
FX5-40SSC-G FX5-80SSC-G	Unavailable	From the first product

When connecting the GOT and servo amplifiers through a CC-Link IE TSN-equipped module

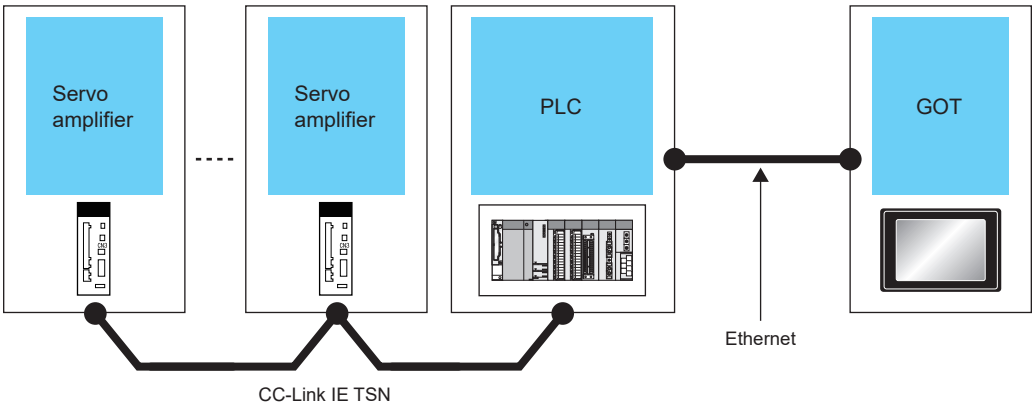

Servo amplifier		PLC			GOT		Number of connectable equipment
Model name	Communication type	CC-Link IE TSN-equipped module	CPU type*1	Communication type	Option device*3	Model	
MR-J5-□G*6 MR-J5-□G-RJ*6 MR-J5W2-□G*6 MR-J5W3-□G*6 MR-J5D1-□G4*6 MR-J5D2-□G4*6 MR-J5D3-□G4*6 MR-JET-□G*6	CC-Link IE TSN	RJ71GN11-T2*5	RnCPU RnENCPU RnSFCPU R12CCPU-V R102WCPU-W	For the system configuration between the GOT and the PLC, refer to the following. ☞ Page 234 Connection to Built-in Ethernet port CPU or C Controller module *2	- (Built into GOT)	GT27 GT25 GT23 GT21 07W GT21 04R GT21 03P 04P ET/R4 GS25 GS21	*4
		RJ71GN11-EIP	RnCPU RnENCPU		GT25-J71E71-100	GT27 GT25	

*1 Select either of the following for [Unit Type] in [Connected Ethernet Controller Setting] in GT Designer3.
- For RnCPU, RnENCPU, or RnSFCPU: [RCPU]
- For R12CCPU-V or R102WCPU-W: [RnCCPU/RnWCPU]

Set either of the following values for [Port No.] when the communication format is:
- UDP: [5006]
- TCP: [5007]

For [Connected Ethernet Controller Setting] of GT Designer3, refer to the following.
☞ Page 255 Connected Ethernet controller setting

*2 To monitor other networks, routing parameter setting is necessary.
For the routing parameter setting, refer to the following.
☞ Page 260 Routing parameter setting

*3 GT25-W and GT2505-V do not support option devices.

*4 For the number of connectable GOTs and PLCs, refer to the following.
☞ Page 234 Connection to Built-in Ethernet port CPU or C Controller module

*5 Use one with firmware version 11 or later.

*6 Use one whose firmware version is as shown below.

Servo amplifier	Applicable firmware version
MR-J5-□G MR-J5-□G-RJ MR-J5W2-□G MR-J5W3-□G MR-JET-□G	B9 or later
MR-J5D1-□G4 MR-J5D2-□G4 MR-J5D3-□G4	C0 or later

Connection to MELSERVO-JE-□B series

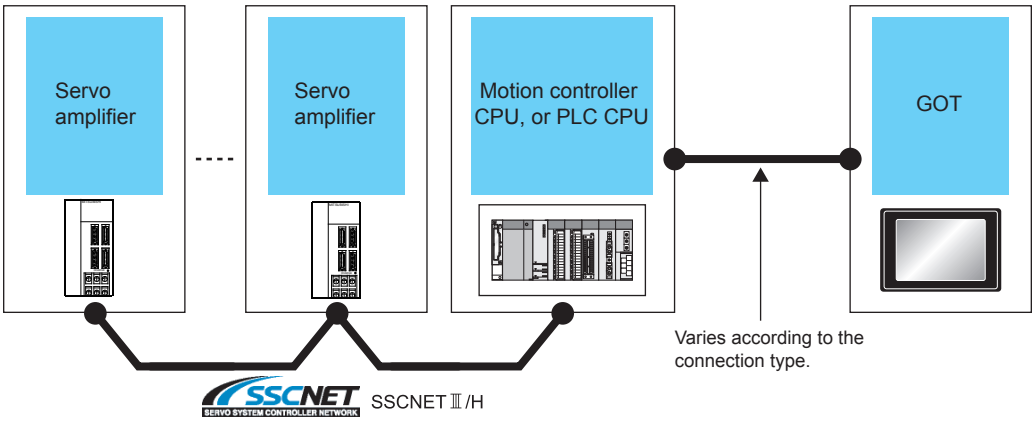

Servo amplifier		Motion controller CPU, or PLC			GOT		Number of connectable equipment
Model name	Communication type	Simple motion module	CPU type	Communication type*1	Option device	Model	
MR-JE-□B MR-JE-□BF	SSCNETIII/H	RD77MS*4	RnCPU	For the system configuration between the GOT and the motion controller or PLC, refer to the following. ☞ Page 217 ETHERNET CONNECTION ☞ Page 375 DIRECT CPU CONNECTION (SERIAL) ☞ Page 439 SERIAL COMMUNICATION CONNECTION ☞ Page 493 BUS CONNECTION ☞ Page 541 MELSECNET/H, MELSECNET/10 CONNECTION (PLC TO PLC NETWORK) ☞ Page 625 CC-Link IE CONTROLLER NETWORK CONNECTION ☞ Page 665 CC-Link IE FIELD NETWORK CONNECTION ☞ Page 695 CC-Link CONNECTION (INTELLIGENT DEVICE STATION) ☞ Page 783 CC-Link CONNECTION (Via G4)	*2	*2	*3
		QD77MS*5	QnCPU				
		LD77MS*5	LnCPU				
		FX5-40SSC-S FX5-80SSC-S*6	FX5CPU				

*1 The connection type depends on the CPU model.
☞ [System Configuration] section in each chapter

*2 The option devices and GOT models depend on the connection type.
☞ [System Configuration] section in each chapter

*3 The numbers of connectable devices below depend on the connection type.
☞ [System Configuration] section in each chapter
• Number of GOTs connectable to one motion controller or PLC
• Number of motion controllers or PLCs connectable to one GOT

*4 Use the firmware version later than 3.

*5 Use a module with the upper five digits later than 16102.

*6 Use a module with its software version 1.004 or later.

GOT side settings

Connection through Motion controller or PLC

The settings of the GOT depend on the connection type between the GOT and the Motion module or the GOT and the PLC CPU.

For details of the GOT side settings, refer to the following.

☞ Page 217 ETHERNET CONNECTION
☞ Page 375 DIRECT CPU CONNECTION (SERIAL)
☞ Page 439 SERIAL COMMUNICATION CONNECTION
☞ Page 493 BUS CONNECTION
☞ Page 541 MELSECNET/H, MELSECNET/10 CONNECTION (PLC TO PLC NETWORK)
☞ Page 625 CC-Link IE CONTROLLER NETWORK CONNECTION
☞ Page 665 CC-Link IE FIELD NETWORK CONNECTION
☞ Page 695 CC-Link CONNECTION (INTELLIGENT DEVICE STATION)
☞ Page 783 CC-Link CONNECTION (Via G4)

Connection through Motion module

The settings of the GOT depend on the connection type between the GOT and the PLC CPU.

For details of the GOT side settings, refer to the following.

☞ Page 217 ETHERNET CONNECTION

16.5 Settable Device Range

Direct connection

For the device setting dialog, refer to the following.

☞ Page 1384 Device setting dialog (Mitsubishi Electric equipment)

For the range of devices usable in the GOT when the GOT and servo amplifier are directly connected, refer to the following.

☞ Page 1550 [MELSERVO-J2M-P8A]
☞ Page 1557 [MELSERVO-J2M-*DU]
☞ Page 1565 [MELSERVO-J2S-*A]
☞ Page 1573 [MELSERVO-J2S-*CP]
☞ Page 1583 [MELSERVO-J2S-*CL]
☞ Page 1592 [MELSERVO-J3-*A]
☞ Page 1602 [MELSERVO-J3-*T]
☞ Page 1615 [MELSERVO-J4-*A, -JE-*A]
☞ Page 1632 [MELSERVO-J4-*A-RJ]
☞ Page 1655 [MELSERVO-JE-*C]
☞ Page 1673 [MELSERVO-J5(W)-*G(-RJ), -JET-*G]

Connection through Motion controller or PLC

For the range of devices usable in the GOT when the GOT and servo amplifier are connected through a Motion controller or Simple Motion module, refer to the following.

☞ Page 1383 Settable Device Range

16.6 Precautions

Station number setting in the servo system

Make sure to establish servo system with the station number set with the host address.
For details of host address setting, refer to the following.
☞ Page 947 Setting communication interface (Controller Setting)

GOT clock function

Since the servo amplifier does not have a clock function, the settings of [Adjust] or [Broadcast] by GOT clock control will be disabled.

Servo amplifier/test operation using the GOT

During the servo amplifier/test operation, when the communication between the GOT and the servo amplifier is interrupted for 0.5[ms] or more, the servo amplifier decelerates, stops, and then gets into the servo lock status. During the servo amplifier/test operation, continue the communication constantly by monitoring the status display of the servo amplifier on the GOT screen, etc.

When connecting multiple GOTs

Do not monitor the same servo amplifier simultaneously with multiple GOTs. If multiple GOTs simultaneously write data to a device of the same servo amplifier, the servo amplifier may malfunction.

When multiple GOTs and the servo amplifier are connected by Ethernet connection

If the same servo amplifier is monitored (read) by multiple GOTs simultaneously, the servo amplifier may not receive all the commands and the GOTs may not monitor (read) the servo amplifier correctly.

When monitoring same communication channel, PLC and servo amplifier at the same time

■Deterioration of the monitoring performance

- If devices of the PLC and servo amplifier are monitored on the same screen or back ground, the monitoring performance will slow down.
- If devices of multiple servo amplifiers are monitored on the same screen, the monitoring performance will slow down.

■How to improve deterioration of monitoring performance

- Separating the channel numbers used for the controllers connected by using the multi-channel function can prevent slowdown in monitoring of the PLC devices.

When monitoring the servo amplifier for multiple axes at the same communication channel

■Deterioration of monitoring performance

- If devices of the servo amplifier for multiple axes are monitored on the same screen or back ground, the monitoring performance may extremely slow down.

■How to improve deterioration of monitoring performance

- The number of the axes which is monitored on the same screen or back ground should be 4 or less.
- Using the multi-channel function, set the monitor of the servo amplifier for multiple axes to the different channel separately per 4 axes.

MEMO

17 ROBOT CONTROLLER CONNECTION

- Page 983 Connectable Model List
- Page 984 System Configuration
- Page 985 GOT Side Settings
- Page 992 Robot Controller Side Settings
- Page 997 Settable Device Range
- Page 997 Precautions

17.1 Connectable Model List

The following table shows the connectable models.

Series	Model name	Clock	Communication type	Connectable model*2	Refer to
Robot controller*1	CR800-D CRnD-700 CR750-D CR751-D	○	Ethernet	GT 27 GT 25 GT 23 GT 21 07W GT 21 04R GT 21 03P 04P ET/R4 GS 25 GS 21	☞ Page 984 Connection to robot controller (CR800-D, CRnD-700)

*1 For details on the connection with CR800-R (R16RTCPU), CRnQ-700/CR750-Q/CR751-Q (Q172DRCPU), and CR800-Q (Q172DSRCPU), refer to MITSUBISHI ELECTRIC PLC CONNECTIONS.

*2 When the robot controller is connected, use the GOT outside the safety fence.

17.2 System Configuration

Connection to robot controller (CR800-D, CRnD-700)

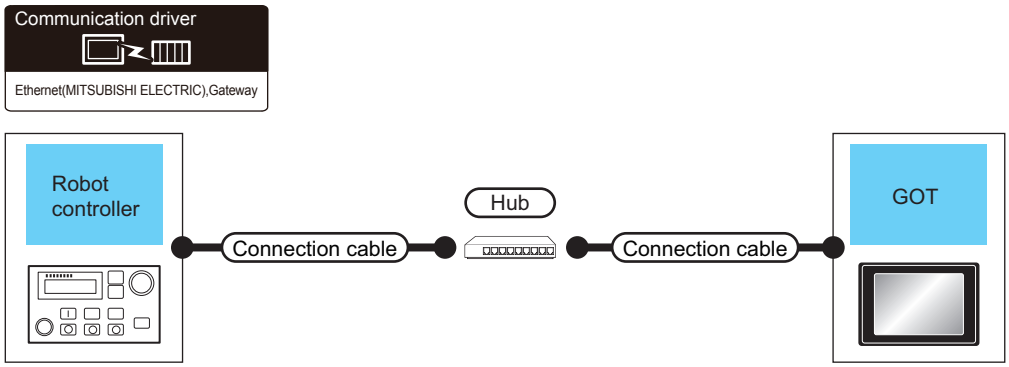

Robot controller		Connection cable*1*2	Maximum segment length*3	GOT		Number of connectable equipment
Model name	Communication type			Option device*8	Model	
CR800-D*4*5 CRnD-700*6*7 CR750-D*6*7 CR751-D*6*7	Ethernet	Twisted pair cable • 10BASE-T Shielded twisted pair cable (STP) or unshielded twisted pair cable (UTP) of category 3, 4, or 5 • 100BASE-TX Shielded twisted pair cable (STP) of category 5 or 5e	100m	- (Built into GOT)	GT27 GT25 GT23 GT21 07W GT21 04R GT21 03P 04P ET/R4 GS25 GS21	1 GOT
				GT25-J71E71-100	GT27 GT25	

*1 Only available for MELSEC-Q (A mode), MELSEC-A (AnSCPU), and Motion CPU (A series) small type.
Connect the GOT to the Ethernet module, hub, or other system equipment according to the Ethernet network system used.
Use cables, connectors, and hubs that meet the IEEE802.3 10BASE-T/100BASE-TX standard.

*2 When only one GOT is connected, the GOT can be directly connected to the controller without a hub.

*3 Length between a hub and a node
The maximum length depends on the Ethernet equipment used.
The following shows the number of the connectable nodes when a repeater hub is used.
• 10BASE-T: Up to 4 nodes for a cascade connection (500 m)
• 100BASE-TX: UP to 2 nodes for a cascade connection (205 m)
When switching hubs are used, the cascade connection between the switching hubs has no logical limit for the number of cascades.
For the limit, contact the switching hub manufacturer.

*4 For the system configuration of CR800-D, refer to the following manual.
Manuals of CR800-D

*5 Select [CR800] for [Unit Type] in [Connected Ethernet Controller Setting] of GT Designer3.
For [Connected Ethernet Controller Setting] of GT Designer3, refer to the following.
Page 991 Connected Ethernet controller setting

*6 For the system configuration of CRnD-700, CR750-D/CR751-D, refer to the following manual.
CRnD-700, CR750-D/CR751-D SET UP MANUAL

*7 Select [CRnD-700] for [Unit Type] in [Connected Ethernet Controller Setting] of GT Designer3.
For [Connected Ethernet Controller Setting] of GT Designer3, refer to the following.
Page 991 Connected Ethernet controller setting

*8 GT25-W and GT2505-V do not support option devices.

17.3 GOT Side Settings

Setting communication interface (Controller Setting)

Set the channel of the connected equipment.

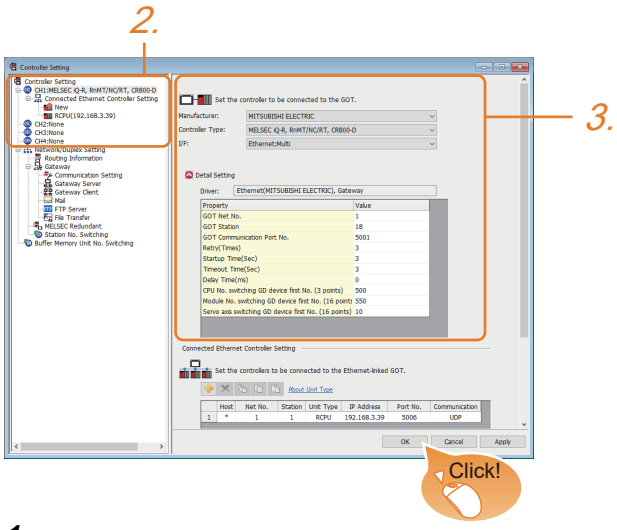

1. Select [Common] → [Controller Setting] from the menu.

2. In the [Controller Setting] window, select the channel No. to be used from the list menu.

3. Set the following items.

- [Manufacturer]: [MITSUBISHI ELECTRIC]
- [Controller Type]: Configure the setting according to the controller to be connected.
- [I/F]: [Ethernet:Multi]

When using the Ethernet communication unit (GT25-J71E71-100), also select [Ethernet:Multi].

- [Detail Setting]: Configure the settings according to the usage environment.

☞ Page 986 Communication detail settings

4. When you have completed the settings, click the [OK] button.

Point

The settings of connecting equipment can be confirmed in [I/F Communication Setting].
For details, refer to the following:
☞ Page 54 I/F communication setting

Communication detail settings

Make the settings according to the usage environment.

Property	Value
GOT Net No.	1
GOT Station	18
GOT Communication Port No.	5001
Retry(Times)	3
Startup Time(Sec)	3
Timeout Time(Sec)	3
Delay Time(ms)	0
CPU No. switching GD device first No. (3 points)	500
Module No. switching GD device first No. (16 points)	550
Servo axis switching GD device first No. (16 points)	10

Item	Description	Range
GOT Net No.	Set the network No. of the GOT. (Default: 1)	1 to 239
GOT Station*1	Set the station No. of the GOT. (Default: 18)	1 to 120
GOT Communication Port No.	Set the GOT port No. for the connection with the Ethernet module. (Default: 5001*2)	1024 to 5010 and 5014 to 65534 (Except for 5011 to 5013 and 49153 to 49170)
Retry	Set the number of retries to be performed when a communication timeout occurs. When receiving no response after retries, the communication times out. (Default: 3times)	0 to 5times
Startup Time	Specify the time period from the GOT startup until GOT starts the communication with the PLC CPU. (Default: 3sec)	3 to 255sec
Timeout Time	Set the time period for a communication to time out. (Default: 3sec)	1 to 90sec
Delay Time	Set the delay time for reducing the load of the network/destination PLC. (Default: 0ms)	0 to 10000 (ms)
CPU No. switching GD device first No. (3 points)	Set the start device number of the GD devices for CPU No. switching. (Default: 500) For the details, refer to the following. ☞ Page 987 Start device number of the GD devices for CPU number switching	<For GT27, GT25, GT23, GS25> 0 to 65520 <For GT21, GS21> 0 to 2032
Module No. switching GD device first No. (16 points)	Set the start device number of the GD devices for module No. switching. (Default: 550) For the details, refer to the following. ☞ Page 988 Start device number of the GD devices for module number switching	<For GT27, GT25, GT23, GS25> 0 to 65520 <For GT21, GS21> 0 to 2032
Servo axis switching GD device first No. (16 points)	Set the servo axis switching GD device first No. (Default: 10) For the details, refer to the following. ☞ Page 989 Servo axis switching GD device first No.	<For GT27, GT25, GT23, GS25> 0 to 65520 <For GT21, GS21> 0 to 2032

*1 Set different values for [GOT Station] of [Detail Setting] and [Station] of [Connected Ethernet Controller Setting].
☞ Page 991 Connected Ethernet controller setting

*2 When assigning the same driver to the multiple channels, in the communication drivers set as the second and following, the default value of [GOT Communication Port No.] becomes the earliest number in the vacant numbers of No. 6000 and later.

Point

Example of [Controller Setting]

For examples of [Controller Setting], refer to the following.

☞ Page 992 Robot Controller Side Settings

Start device number of the GD devices for CPU number switching

■Specifying a CPU number with a device

[CPU No.] can be specified with the GOT internal registers (GD devices) by specifying a value (100 to 102) to [CPU No.] in the device setting dialog in GT Designer3.

Set the start device number of the GD devices to be used in [CPU No. switching GD device first No. (3 points)].

Specify [CPU No.] with the three consecutive GD devices, starting the set device number.

When [500] is set to [CPU No. switching GD device first No. (3 points)], GD500 to GD502 are used to specify [CPU No.] as shown in the following table.

CPU No.	GD device	Setting range
100	GD500	1 to 4 Setting an invalid value causes a communication timeout error. Specifying a nonexistent CPU No. or a CPU No. not supporting a multiple CPU system with a device causes a controller error.
101	GD501	
102	GD502	

■Specifying a CPU number with a device on the initially-displayed screen

Set [CPU No. switching GD device first No. (3 points)] so that the values of the GD devices are retained and monitored upon the GOT startup.

■Specifying a CPU number with a device in a multi-channel connection

If the setting range of [CPU No. switching GD device first No. (3 points)] set in each channel overlaps, the monitoring target CPU No. set to each channel is switched simultaneously.

Set [CPU No. switching GD device first No. (3 points)] in each channel so that the setting range does not overlap.

■Specifying a CPU number and a station number with devices in a multi-channel connection

When GD10 to GD25 are used to specify the station No. of an inverter or non-Mitsubishi temperature controller connected, setting [10] to [CPU No. switching GD device first No. (3 points)] in a different channel switches the monitoring target CPU No. and station No. of an inverter or non-Mitsubishi temperature controller set to each channel simultaneously.

Set [CPU No. switching GD device first No. (3 points)] so that the setting range does not overlap the station No. of an inverter or non-Mitsubishi temperature controller.

Start device number of the GD devices for module number switching

■Specifying a module number with a device

In a connection via a simple motion module, [Unit No.] can be specified with the GOT internal registers (GD devices) by specifying a value (100 to 10F) to [Unit No.] in the device setting dialog in GT Designer3.
Set the start device number of the GD devices to be used in [Module No. switching GD device first No. (16 points)].
Specify [Unit No.] with the 16 consecutive GD devices, starting the set device number.
When [550] is set to [Module No. switching GD device first No. (16 points)], GD550 to GD565 are used to specify [Unit No.] as shown in the following table.

Unit No.	GD device	Setting range
100	GD550	The setting range depends on [Unit Type]. • When [MELSEC iQ-R, RnMT/NC/RT, CR800-D], [MELSEC iQ-R, RnMT/RT, CR800-D], [MELSEC-Q/QS, Q17nD/M/NC/DR/DSR, CRnD-700], [MELSEC-Q, Q17nD/M/DR/DSR, CRnD-700], [MELSEC-L] or [MELIPC] is selected for [Unit Type] 00 to FF • When [MELSEC iQ-F] is selected for [Unit Type] 01 to 10 Setting an invalid value causes a device range error.
101	GD551	
102	GD552	
103	GD553	
104	GD554	
105	GD555	
106	GD556	
107	GD557	
108	GD558	
109	GD559	
10A	GD560	
10B	GD561	
10C	GD562	
10D	GD563	
10E	GD564	
10F	GD565	

■Specifying a module number with a device on the initially-displayed screen

Set [Module No. switching GD device first No. (16 points)] so that the values of the GD devices are retained and monitored upon the GOT startup.

■Specifying a module number with a device in a multi-channel connection

If the setting range of [Module No. switching GD device first No. (16 points)] set in each channel overlaps, the module No. of the simple motion module via the servo amplifier device of each channel is switched simultaneously.
Set [Module No. switching GD device first No. (16 points)] for each channel so that the setting range does not overlap.

■Specifying a station number and a module number with devices in a multi-channel connection

When GD10 to GD25 are used to specify the station No. of an inverter or non-Mitsubishi temperature controller connected, setting [10] to [Module No. switching GD device first No. (16 points)] switches the module No. of the simple motion module via the servo amplifier device and the station No. of an inverter or non-Mitsubishi temperature controller set to each channel simultaneously.
Set [Module No. switching GD device first No. (16 points)] so that the setting range does not overlap the station No. of an inverter or non-Mitsubishi temperature controller.

Servo axis switching GD device first No.

■Indirect specification of the servo axis No.

In a connection via a Motion CPU or Simple Motion module, a servo axis No. can be indirectly specified with GOT internal registers (GD devices) by specifying a value (100 to 115) to the axis No. of the servo amplifier device.
Set the start device number of the GD devices to be used in [Servo axis switching GD device first No. (16 points)].
Specify a servo axis number with 16 consecutive GD devices, starting the set device number.
When [10] is set to [Servo axis switching GD device first No. (16 points)], GD10 to GD25 are used to specify a servo axis number as shown in the following table.

Servo axis No.	GD device	Setting range
100	GD10	1 to 64 Setting an invalid value causes a device range error.
101	GD11	
102	GD12	
103	GD13	
104	GD14	
105	GD15	
106	GD16	
107	GD17	
108	GD18	
109	GD19	
110	GD20	
111	GD21	
112	GD22	
113	GD23	
114	GD24	
115	GD25	

■Specifying a servo axis number with a device on the initially-displayed screen

Set [Servo axis switching GD device first No. (16 points)] so that the values of the GD devices are retained and monitored upon the GOT startup.

■Specifying a servo axis number with a device in a multi-channel connection

If the setting rage of [Servo axis switching GD device first No. (16 points)] set in each channel overlaps, the axis No. of the servo amplifier of each channel is switched simultaneously.
Set [Servo axis switching GD device first No. (16 points)] for each channel so that the setting range does not overlap.

■Specifying a station number and a servo axis number with devices in a multi-channel connection

When GD10 to GD25 are used to specify the station No. of an inverter or non-Mitsubishi temperature controller connected, setting [10] to [Servo axis switching GD device first No. (16 points)] switches the axis No. of the servo amplifier and the station No. of an inverter or non-Mitsubishi temperature controller set to each channel simultaneously.
Set [Servo axis switching GD device first No. (16 points)] so that the setting range does not overlap the station No. of an inverter or non-Mitsubishi temperature controller.

GOT Ethernet setting

The GOT can be connected to a different network by configuring the following setting.

GOT IP address setting

Set the following communication port setting.

- Standard port (When using GT25-W or GS25: Port 1)
- Extended port (When using GT25-W or GS25: Port 2)

GOT Ethernet common setting

Set the following setting which is common to the standard port and the extended port, or port 1 and port 2.

- [Default Gateway]
- [Peripheral S/W Communication Port No.]
- [Transparent Port No.]

IP filter setting

By configuring the IP filter setting, the access from the specific IP address can be permitted or shut off.

For the detailed settings, refer to the following manual.

☞ Page 50 GOT Ethernet Setting

Connected Ethernet controller setting

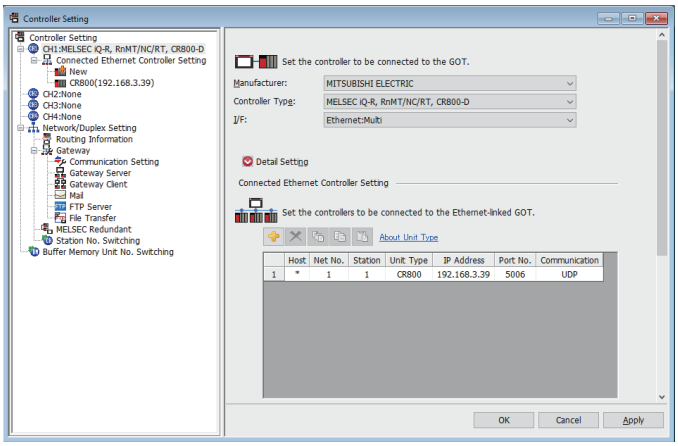

Item	Description	Range
Host	The host is displayed. It refers to a station that can be connected without setting a station number. (The host is indicated with an asterisk (*))	—
Net No.	Set the network No. of the connected Ethernet module. (Default: 1)	1 to 239
Station*2	Set the station No. of the connected Ethernet module. (Default: 1)	1 to 64
Unit Type*1	Set the type of the connected Ethernet module. CRnD-700, CR800	CRnD-700, CR800
IP address	Set the IP address of the connected Ethernet module. (Default: blank)	0.0.0.0 to 255.255.255.255
Port No./Communication	The port No. and communication that can be set differ depending on the [Unit Type]. <CR800> • When the port No. is [5006], the communication is [UDP] (fixed). • When the port No. is [5007], the communication is [TCP] (fixed). <CRnD-700> • Port No. can be set only [5001], and the communication is [UDP] (fixed).	

*1 Selected from [CRnD-700] and [CR800] for [Controller Type].

*2 Set different values for [GOT Station] of [Detail Setting] and [Station] of [Connected Ethernet Controller Setting].

☞ Page 986 Communication detail settings

Point

• Example of [Connected Ethernet Controller Setting]

For examples of [Connected Ethernet Controller Setting], refer to the following.

☞ Page 992 Robot Controller Side Settings

• Communication interface setting by Utility

The communication interface setting can be changed on the Utility's [Communication Settings] after writing [Controller Setting] of project data.

For details on the Utility, refer to the following manual.

📖GOT2000 Series User's Manual (Utility)

• Precedence in communication settings

When settings are made by GT Designer3 or the Utility, the latest setting is effective.

17.4 Robot Controller Side Settings

Model		Reference
Robot controller	CR800-D	☞ Page 992 Connection to robot controller (CR800-D)
	CRnD-700	☞ Page 994 Connection to robot controller (CRnD-700)

Connection to robot controller (CR800-D)

This section describes the settings of a GOT and a robot controller in the following case of system configuration.

Point

Robot controller (CR800-D)

For details of the robot controller (CR800-D), refer to the following manual.

📖CR800-D SET UP MANUAL

System configuration

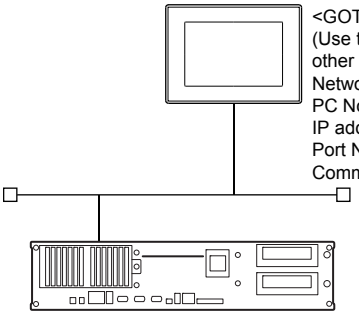

<GOT>
(Use the default value for settings other than the following.)
Network No. :1
PC No. :18
IP address :192.168.0.18
Port No. :5001
Communication format :UDP (fixed)

<CR800-D>
(Use the default value for settings other than the following.)
Network No. :1 (virtual)*1
PC No. :2 (virtual)*1
IP address :192.168.0.19

*1 These setting items do not exist at the robot controller side. However, the virtual values must be set on the GOT side.
☞ Page 993 [Controller Setting] and [Connected Ethernet Controller Setting] of GT Designer3

Parameter settings for CR800-D

Set the parameters using RT ToolBox3

Select [Online] → [Parameter] → [Communication Parameter] → [Ethernet] and set [IP Address].

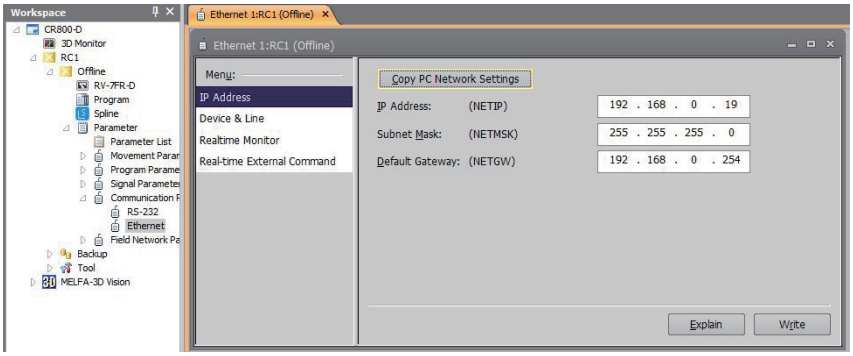

Item	Set value	Setting necessity at GOT connection
IP Address (NETIP)	192.168.0.19	○

○: Necessary △: As necessary ×: Not necessary

[Controller Setting] and [Connected Ethernet Controller Setting] of GT Designer3

For the setting method of [Controller Setting] and [Connected Ethernet Controller Setting] of GT Designer3, refer to the following.

☞ Page 985 Setting communication interface (Controller Setting)

■Controller Setting

Item	Set value
GOT Net No.	1
GOT PC No.	18
GOT Communication Port No.	5001
Retry	3 times
Startup Time	3 sec
Timeout Time	3 sec
Delay Time	0 ms

■GOT Ethernet Setting

Item	Set value
GOT IP Address	192.168.0.18
Subnet Mask	255.255.255.0
Default Gateway	0.0.0.0
Peripheral Communication Port No.	5015
Transparent Port No.	5014

■Connected Ethernet Controller Setting

Item		Set value
Ethernet setting No.1	Host	*
	Net No.	1
	Station	1
	Unit Type	CR800
	IP Address	192.168.0.19
	Port No.*1	5006
	Communication*1	UDP

*1 The following [Port No.] and [Communication format] can also be set.
[Port No.]: 5007
[Communication]: TCP

Checking communication state of CR800-D

■When using the Windows Command Prompt

Execute a Ping command at the Command Prompt of Windows.

- At normal communication

C:\>Ping 192.168.0.19

Reply from 192.168.0.19:bytes=32 time<1ms TTL=32

- At abnormal communication

C:\>Ping 192.168.0.19

Request timed out.

■At abnormal communication

At abnormal communication, check the following and execute the Ping command again.

- Cable connecting condition
- Confirmation of switch and network parameter setting
- Operation state of CR800-D (faulty or not)
- The IP address of CR800-D specified in the ping command

Connection to robot controller (CRnD-700)

This section describes the settings of a GOT and a robot controller in the following case of system configuration.

Point

Robot controller (CRnD-700)

For details of the robot controller (CRnD-700), refer to the following manual.

CRnD-700 SET UP MANUAL

System configuration

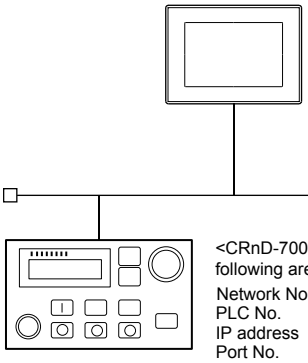

<GOT> (The settings other than the following are set to the default)

Network No. : 1
PLC No. : 1
IP address : 192.168.0.18
Port No. : 5001
Communication format : UDP (fixed)

<CRnD-700> (The settings other than the following are set to the default)

Network No. : 1
PLC No. : 2
IP address : 192.168.0.19
Port No. : 5001
Communication format : UDP(fixed)

Parameter settings for CRnD-700

■For RT ToolBox2

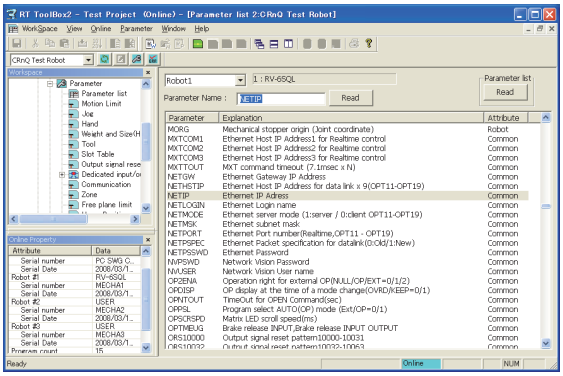

Item	Set value	Setting necessity at GOT connection
NETIP	192.168.0.19	○
GOTPORT	5001	○

○: Necessary △: As necessary ×: Not necessary

■For R32TB or R56TB

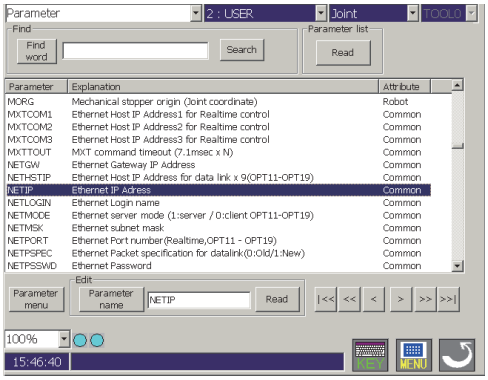

(For R56TB)

Item	Set value	Setting necessity at GOT connection
NETIP	192.168.0.19	○
GOTPORT	5001	○

○: Necessary △: As necessary ×: Not necessary

[Controller Setting] and [Connected Ethernet Controller Setting] of GT Designer3

For the setting method of [Controller Setting] and [Connected Ethernet Controller Setting] of GT Designer3, refer to the following.

☞ Page 985 Setting communication interface (Controller Setting)

■Communication settings

Item	Set value
GOT Net No.	1
GOT Station	1
GOT Communication Port No.	5001
Retry	3times
Startup Time	3sec
Timeout Time	3sec
Delay Time	0ms

■GOT Ethernet Setting (standard port)

Item	Set value
GOT IP Address	192.168.0.18
Subnet Mask	255.255.255.0
Default Gateway	0.0.0.0
Peripheral S/W Communication Port No.	5015
Transparent Port No.	5014

■Connected Ethernet Controller Setting

Item		Set value
Ethernet setting No.1	Host	*
	Net No.	1
	Station	2
	Unit Type	CRnD-700
	IP address	192.168.0.19
	Port No.	5001 (fixed)
	Communication	UDP (fixed)

Confirming communication state of CRnD-700

■When using the Windows Command Prompt

Execute a Ping command at the Command Prompt of Windows.

- At normal communication

C:\>Ping 192.168.0.19

Reply from 192.168.0.19:bytes=32 time<1ms TTL=32

- At abnormal communication

C:\>Ping 192.168.0.19

Request timed out.

■At abnormal communication

At abnormal communication, check the followings and execute the Ping command again.

- Cable connecting condition
- Parameter settings
- Operation state of the CRnD-700. (faulty or not)
- The IP address of the CRnD-700 specified for the Ping command.

17.5 Settable Device Range

For the device setting dialog, refer to the following.

☞ Page 1384 Device setting dialog (Mitsubishi Electric equipment)

For details on the device range that can be used on the GOT, refer to the following.

☞ Page 1393 [MELSEC iQ-R, RnMT/NC/RT, CR800-D], [MELSEC iQ-R, RnMT/RT, CR800-D]
☞ Page 1496 [MELSEC-Q/QS, Q17nD/M/NC/DR/DSR, CRnD-700], [MELSEC-Q, Q17nD/M/DR/DSR, CRnD-700]

17.6 Precautions

When setting IP address

Do not use "0" and "255" at the end of an IP address.

(Numbers of *.*.*.0 and *.*.*.255 are used by the system)

The GOT may not monitor the controller correctly with the above numbers.

Consult with the administrator of the network before setting an IP address to the GOT and controller.

When connecting to the multiple network equipment (including GOT) in a segment

By increasing the network load, the transmission speed between the GOT and PLC may be reduced.

The following actions may improve the communication performance.

- Using a switching hub
- More high speed by 100BASE-TX (100Mbps)
- Reduction of the monitoring points on GOT

MEMO

18 CNC CONNECTION

- Page 999 Connectable Model List
- Page 1000 System Configuration
- Page 1004 Connection Diagram
- Page 1005 GOT Side Settings
- Page 1016 CNC Side Settings
- Page 1024 Settable Device Range
- Page 1024 Precautions

18.1 Connectable Model List

The following table shows the connectable models.

Series	Model name	Clock	Communication type	Connectable model	Refer to
MELDAS C6/C64 *1	FCA C6 FCA C64	×	RS-232 RS-422	GT27 GT25 GT23 GS25	☞ Page 1000 Direct CPU connection (serial)
			MELSECNET/10*2	GT27 GT25	☞ Page 1001 MELSECNET/10 connection (PLC to PLC network)
			CC-Link(ID)	GT27 GT25	☞ Page 1002 CC-Link connection (intelligent device station)
			Ethernet	GT27 GT25 GT23 GS25	☞ Page 1003 Ethernet connection
M700VS/M70V	M700VS M70V	×	CC-Link(ID)	GT27 GT25	☞ Page 1002 CC-Link connection (intelligent device station)
M800/M80	M800/M80	×	CC-Link(ID)	GT27 GT25	☞ Page 1002 CC-Link connection (intelligent device station)

*1 Use the NC system software version D0 or later.
*2 Includes the case on the MELSECNET/H network system in the NET/10 mode. The GOT cannot be connected to the remote I/O network.

For the connection to CNC C80, CNC C70, refer to PART 2 MITSUBISHI ELECTRIC PLC CONNECTIONS.

18.2 System Configuration

Direct CPU connection (serial)

Communication driver

AJ71C24, MELDAS C6*

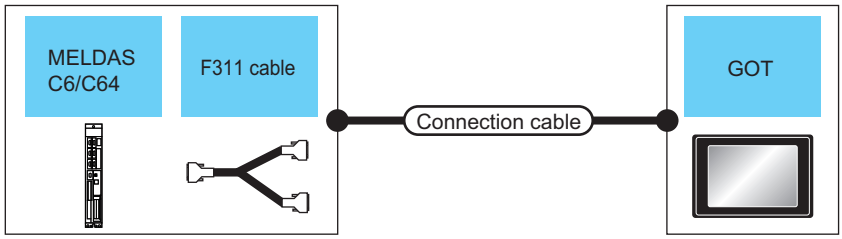

CNC			Connection cable		GOT		Number of connectable equipment
Model name	**F311 cable**	**Communication type**	**Cable model**	**Max. distance**	**Option device*4**	**Model**	
MELDAS C6/C64 *1	-	RS-232	User preparing Page 1004 RS232 connection diagram 1)	15m	- (Built into GOT)	GT27 GT25 GT23 GS25	1 GOT for 1 PLC
					GT15-RS2-9P	GT27 GT25	
MELDAS C6/C64 *2	User preparing *3	RS-422	GT01-C30R4-25P(3m) GT01-C100R4-25P(10m) GT01-C200R4-25P(20m) GT01-C300R4-25P(30m)	30.5m	- (Built into GOT)	GT27 GT25 GT23 GS25	
					GT15-RS4-9S	GT27 GT25	

*1 Connect the connector of the CNC side to TERMINAL.
*2 Connect the connector of the CNC side to SIO.
*3 To be prepared by the user, referring the following.
MELDAS C6/C64 CONNECTION AND MAINTENANCE MANUAL (BNP-B2255)
*4 GT25-W and GT2505-V do not support option devices.

MELSECNET/10 connection (PLC to PLC network)

Point

• Connectable network

MELSECNET/10 connection includes the case that MELSECNET/H is used in NET/10 mode.The GOT cannot be connected to the remote I/O network.

Connect the GOT to the following network systems as an ordinary station.

MELSECNET/10 network system (PLC to PLC network) optical loop system

MELSECNET/10 network system (PLC to PLC network) coaxial bus system

• MELSECNET/H network module

When connecting the MELSECNET/H network module to the MELSECNET/10 network system, specify the MELSECNET/10 Mode as a network type.

Communication driver

MELSECNET/H

(When MELSECNET/H communication unit is used)

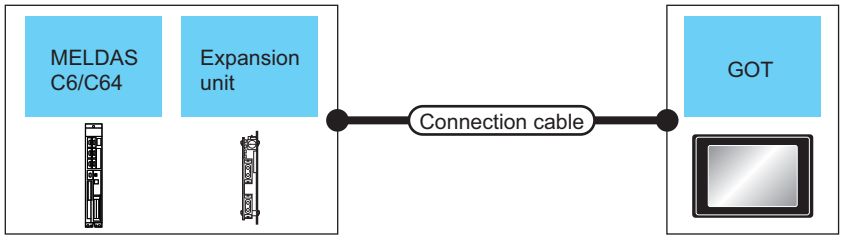

CNC			Connection cable		GOT		Number of connectable equipment
Model name	Expansion unit	Communication type	Cable model	Max. distance	Option device*4	Model	
MELDAS C6/C64	FCU6-EX878	MELSECNET/10 (Coaxial bus system)	Coaxial cable*3	*1	GT15-J71BR13*2	GT27 GT25	31 GOTs
	FCU6-EX879	MELSECNET/10 (Optical loop system)	Optical fiber cable*3	*1	GT15-J71LP23-25*2	GT27 GT25	63 GOTs

*1 The overall extension cable length and the length between stations vary depending on the cable type to be used and the total number of stations.
For details, refer to the following manuals.
MELDAS C6/C64 CONNECTION AND MAINTENANCE MANUAL (BNP-B2255)
MELDAS C6/C64 NETWORK MANUAL (BNP-B2373)

*2 Specify the MELSECNET/10 Mode as the Communication Settings.For the setting, refer to the following.
Page 1005 Setting communication interface (Controller Setting)

*3 For the coaxial cable and optical fiber cable, refer to the following manuals.
MELDAS C6/C64 CONNECTION AND MAINTENANCE MANUAL (BNP-B2255)
MELDAS C6/C64 NETWORK MANUAL (BNP-B2373)

*4 GT25-W and GT2505-V do not support option devices.

CC-Link connection (intelligent device station)

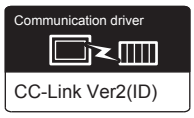

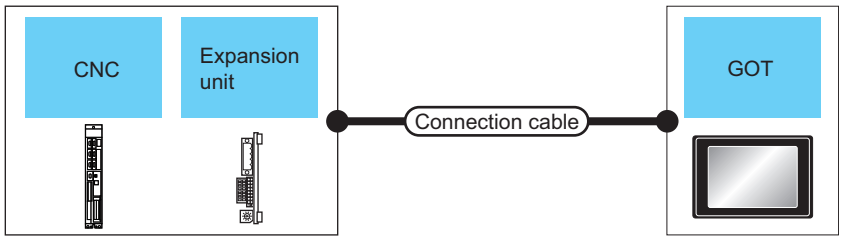

CNC			Connection cable		GOT		Number of connectable equipment
Model name	Expansion unit	Communication type	Cable model	Max. distance	Option device*4	Model	
MELDAS C6/C64	FUC6-HR865	CC-Link(ID)	CC-Link dedicated cable*3	*1	GT15-J61BT13*2	GT27 GT25	26 GOTs
M700VS M70V	FCU7-HN746						
M800W/M80W	FCU8-EX561 (WN561)						
M80/M800S	FCU8-EX561 (WN561)*5						

*1 The overall extension cable length and the length between stations vary depending on the cable type to be used and the total number of stations.
For details, refer to the following manuals.
📖C6/C64/C64T CONNECTION AND MAINTENANCE MANUAL BNP-B2255
📖C6/C64/C64T NETWORK INSTRUCTION MANUAL BNP-B2373

*2 Specify Ver.1 as the mode setting in the Communication Settings to use it.
For details of the settings, refer to the following the manual.
☞ Page 1005 Setting communication interface (Controller Setting)

*3 For the specifications and inquiries of the CC-Link dedicated cable, refer to the following.
📖CC-Link Partner Association's home page: http://www.cc-link.org/

*4 GT25-W and GT2505-V do not support option devices.

*5 Connect it to the relay module for communication extension (FCU8-EX702, or FCU8-EX703).

Ethernet connection

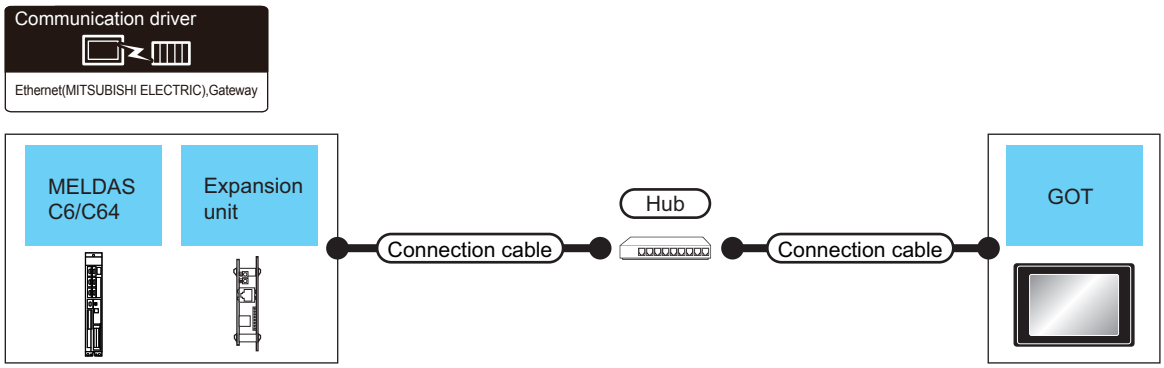

CNC			Connection cable*1		GOT		Number of connectable equipment
Model name	Expansion unit	Communication type	Cable model	Maximum segment length*2	Option device*5	Model	
MELDAS C6/C64	FUC6-EX875*2*4	Ethernet	• 100BASE-TX Shielded twisted pair cable (STP) or unshielded twisted pair cable (UTP) of category 5 or higher • 10BASE-T Shielded twisted pair cable (STP) or unshielded twisted pair cable (UTP) of category 3 or higher	100m	- (Built into GOT)	GT27 GT25 GT23 GS25	128 GOTs (recommended to 16 units or less)
					GT25-J71E71-100	GT27 GT25	

*1 Only available for MELSEC-Q (A mode), MELSEC-A (AnSCPU), and Motion CPU (A series) small type.
Connect the GOT to the Ethernet module, hub, or other system equipment according to the Ethernet network system used.
Use cables, connectors, and hubs that meet the IEEE802.3 10BASE-T/100BASE-TX standards.
When only one GOT is connected, the GOT can be directly connected to the controller without a hub.

*2 Length between a hub and a node
The maximum length depends on the Ethernet equipment used.
The following shows the number of the connectable nodes when a repeater hub is used.
• 10BASE-T: Up to 4 nodes for a cascade connection (500 m)
• 100BASE-TX: UP to 2 nodes for a cascade connection (205 m)
When switching hubs are used, the cascade connection between the switching hubs has no logical limit for the number of cascades.
For the limit, contact the switching hub manufacturer.

*3 For the system configuration of the expansion unit, refer to the following manuals.
📖C6/C64/C64T CONNECTION AND MAINTENANCE MANUAL BNP-B2255
📖C6/C64/C64T NETWORK INSTRUCTION MANUAL BNP-B2373

*4 Select [AJ71QE71] for [Unit Type] in [Connected Ethernet Controller Setting] of GT Designer3.
For [Connected Ethernet Controller Setting] of GT Designer3, refer to the following.
☞ Page 1015 Connected Ethernet controller setting

*5 GT25-W and GT2505-V do not support option devices.

18.3 Connection Diagram

The following diagram shows the connection between the GOT and the CNC.

RS-232 cable

Connection diagram

■RS232 connection diagram 1)

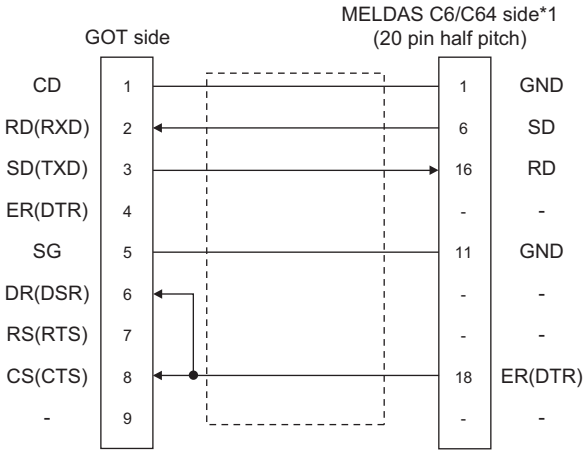

*1 For details of the MELDAS C6/C64 side connection, refer to the following manuals.
📖MELDAS C6/C64 CONNECTION AND MAINTENANCE MANUAL BNP-B2255
📖MELDAS C6/C64 NETWORK MANUAL BNP-B2373

Precautions when preparing a cable

■Cable length

The length of the RS-232 cable must be 15m or less.

■GOT side connector

For the GOT side connector, refer to the following.

☞ Page 64 GOT connector specifications

18.4 GOT Side Settings

Setting communication interface (Controller Setting)

Set the channel of the connected equipment.

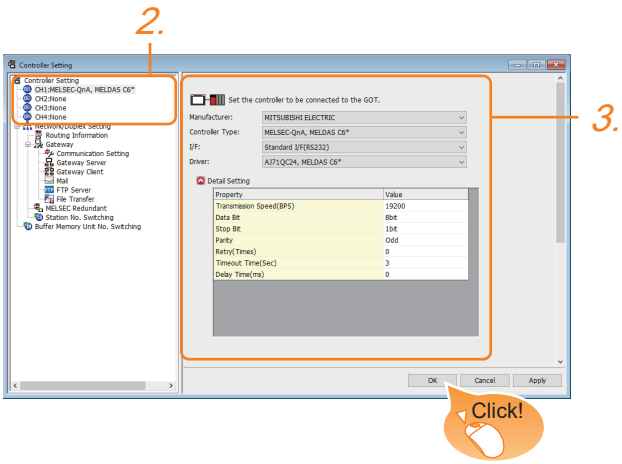

1. Select [Common] → [Controller Setting] from the menu.

2. In the [Controller Setting] window, select the channel No. to be used from the list menu.

3. Set the following items.

- [Manufacturer]: [MITSUBISHI ELECTRIC]
- [Controller Type]: [MELSEC-QnA, MELDAS C6*]
- [I/F]: Interface to be used

When using the Ethernet communication unit (GT25-J71E71-100), select [Ethernet:Multi].

- [Driver]:

For direct CPU connection (serial)
[AJ71QC24, MELDAS C6*]
For ELSECNET/10 connection
[MELSECNET/H] (used in MNET/10 mode of network type)
For CC-Link (ID) connection
[CC-Link Ver.2(ID)]
For Ethernet connection
[Ethernet(MITSUBISHI ELECTRIC), Gateway]

- [Detail Setting]: Configure the settings according to the usage environment.

☞ Page 1006 Communication detail settings

4. When you have completed the settings, click the [OK] button.

Point

The settings of connecting equipment can be confirmed in [I/F Communication Setting].
For details, refer to the following.
☞ Page 54 I/F communication setting

Communication detail settings

Make the settings according to the usage environment.

AJ71QC24, MELDAS C6*

Property	Value
Transmission Speed(BPS)	19200
Data Bit	8 bit
Stop Bit	1 bit
Parity	Odd
Retry(Times)	0
Timeout Time(Sec)	3
Delay Time(ms)	0

Item	Description	Range
Transmission Speed	Set this item when change the transmission speed used for communication with the connected equipment. (Default: 19200bps)	4800bps, 9600bps, 19200bps, 38400bps, 57600bps, 115200bps
Data Bit	Set this item when change the data length used for communication with the connected equipment. (Default: 8bit)	8bit (fixed)
Stop Bit	Specify the stop bit length for communications. (Default: 1bit)	1bit (fixed)
Parity	Specify whether or not to perform a parity check, and how it is performed during communication. (Default: Odd)	Odd (fixed)
Retry	Set the number of retries to be performed when a communication timeout occurs. (Default: 0time)	0 to 5times
Timeout Time	Set the time period for a communication to time out. (Default: 3sec)	1 to 30sec
Delay Time	Set this item to adjust the transmission timing of the communication request from the GOT. (Default: 0ms)	0 to 300ms

MELSECNET/H (used in the MNET/10 mode)

Property	Value
Network Type	MNET/H mode
Network No.	1
Station No.	1
Group No.	0
Mode Setting	Online(Auto Reconnect)
Transmission Speed(Mbps)	25
Refresh Interval(Times)	1
Retry(Times)	3
Timeout Time(Sec)	3
Delay Time(ms)	0
CPU No. switching GD device first No. (3 points)	500
Module No. switching GD device first No. (16 points	550
Servo axis switching GD device first No. (16 points)	10

Item	Description	Range
Network Type	Set the network type. (Default: MNET/H mode)	• MNET/H mode • MNET/10 mode • MNET/H EXT mode
Network No.	Set the network No. (Default: 1)	1 to 239
Station No.	Set the station No. of the GOT. (Default: 1)	1 to 64
Mode Setting	Set the operation mode of the GOT. (Default: Online (auto. reconnection))	• Online (auto. reconnection) • Offline • Test between slave station*1 • Self-loopback test*1 • Internal self-loopback test*1 • H/W test*1
Transmission Speed	Set the communication transmission speed. (Default: 25Mbps) When specifying [MNET/10 mode] as the network type, only 10Mbps can be set applicable.	10Mbps/25Mbps
Refresh Interval	Set the number of refreshes to secure the send/receive data in station units during communication. (Default: 1time) Valid when [Secured data send/Secured data receive] is marked by the control station side network parameters of the MELSECNET/H network system.	1 to 1000times
Retry	Set the number of retries to be performed when a communication timeout occurs. When receiving no response after retries, the communication times out. (Default: 3times)	0 to 5times
Timeout Time	Set the time period for a communication to time out. (Default: 3sec)	1 to 90sec
Delay Time	Set the delay time for reducing the load of the network/destination PLC. (Default: 0ms)	0 to 300ms
CPU No. switching GD device first No. (3 points)	Set the start device number of the GD devices for CPU No. switching. (Default: 500) For the details, refer to the following. ☞ Page 1011 Start device number of the GD devices for CPU number switching	0 to 65520
Module No. switching GD device first No. (16 points)	Set the start device number of the GD devices for module No. switching. (Default: 550) For the details, refer to the following. ☞ Page 1012 Start device number of the GD devices for module number switching	0 to 65520
Servo axis switching GD device first No. (16 points)	Set the servo axis switching GD device first No. (Default: 10) For the details, refer to the following. ☞ Page 1013 Servo axis switching GD device first No.	0 to 65520

*1 For details, refer to the following manual.
📖Q corresponding MELSECNET/H Network System Reference Manual (PLC to PLC network)

Point

When MELSECNET/H communication unit is used

When connecting to the MELSECNET/10 network using the MELSECNET/H communication unit, specify [MNET/10 mode] as [Network Type].

CC-Link Ver.2 (ID)

Property	Value
Station No.	1
Transmission Rate	0:Online:156kbps
Mode	Ver.1
Expanded Cyclic	Single
Occupied Station	1 station
Input for Error Station	Clear
Retry(Times)	3
Timeout Time(Sec)	3
Delay Time(ms)	0
Transmission method	MELSEC (compatible)
CPU No. switching GD device first No. (3 points)	500
Module No. switching GD device first No. (16 points	550
Servo axis switching GD device first No. (16 points)	10

Item	Description	Range
Station No.	Set the station No. of the GOT. (Default: 1)	1 to 64
Transmission Rate*1	Set the transmission speed and the mode of the GOT. (Default: 0)	0 to E
Mode	Set the mode of CC-Link. (Default: Ver.1)	Ver.1/Ver.2/Additional/Offline
Expanded Cyclic	Set the cyclic point expansion. (Default: Single)	Single/Double/Quadruple/Octuple
Occupied Station	Set the number of stations occupied by the GOT. (Default: 1 Station)	1 Station/4 Stations
Input for Error Station	Set Clear/Hold at an error occurrence. (Default: Clear)	Clear/Hold
Retry	Set the number of retries to be performed when a communication timeout occurs. When no response is received after retries, a communication times out. (Default: 3times)	0 to 5times
Timeout Time	Set the time period for a communication to time out. (Default: 3sec)	3 to 90sec
Delay Time	Set the delay time for reducing the load of the network/destination PLC. (Default: 0ms)	0 to 300ms
Transmission method*2	Set the transmission method of CC-Link. (Default: MELSEC (compatible)	MELSEC (compatible), Cyclic
CPU No. switching GD device first No. (3 points)	Set the start device number of the GD devices for CPU No. switching. (Default: 500) For the details, refer to the following. ☞ Page 1011 Start device number of the GD devices for CPU number switching	0 to 65520
Module No. switching GD device first No. (16 points)	Set the start device number of the GD devices for module No. switching. (Default: 550) For the details, refer to the following. ☞ Page 1012 Start device number of the GD devices for module number switching	0 to 65520
Servo axis switching GD device first No. (16 points)	Set the servo axis switching GD device first No. (Default: 10) For the details, refer to the following. ☞ Page 1013 Servo axis switching GD device first No.	0 to 65520

*1 Transmission speed settings

The following lists the transmission speed settings of the CC-Link communication.

Set value	Description
0	Online: 156kbps
1	Online: 625kbps
2	Online: 2.5Mbps
3	Online: 5Mbps
4	Online: 10Mbps
5	Line test: 156kbps
6	Line test: 625kbps
7	Line test: 2.5Mbps
8	Line test: 5Mbps
9	Line test: 10Mbps
A	Hardware test: 156kbps
B	Hardware test: 625kbps
C	Hardware test: 2.5Mbps
D	Hardware test: 5Mbps
E	Hardware test: 10Mbps

For details of the hardware test, refer to the following manual.

📖CC-Link System Master/Local Module User's Manual for CC-Link module to be used

*2 In the case of M800/M80, M700VS/M70V series, Transmission method is set to "cyclic".

Ethernet(MITSUBISHI ELECTRIC), Gateway

Property	Value
GOT Net No.	1
GOT Station	18
GOT Communication Port No.	5001
Retry(Times)	3
Startup Time(Sec)	3
Timeout Time(Sec)	3
Delay Time(ms)	0
CPU No. switching GD device first No. (3 points)	500
Module No. switching GD device first No. (16 points)	550
Servo axis switching GD device first No. (16 points)	10

Item	Description	Range
GOT Net No.	Set the network No. of the GOT. (Default: 1)	1 to 239
GOT Station*1	Set the station No. of the GOT. (Default: 18)	1 to 64
GOT Communication Port No.	Set the GOT port No. for the connection with the Ethernet module. (Default: 5001*2)	1024 to 5010 to 5014 to 65534 (Except for 5011, 5012, 5013 and 49153 to 49170)
Retry	Set the number of retries to be performed when a communication timeout occurs. When receiving no response after retries, the communication times out. (Default: 3times)	0 to 5times
Startup Time	Specify the time period from the GOT startup until GOT starts the communication with the PLC CPU. (Default: 3sec)	3 to 255sec
Timeout Time	Set the time period for a communication to time out. (Default: 3sec)	3 to 90sec
Delay Time	Set the delay time for reducing the load of the network/destination PLC. (Default: 0ms)	0 to 10000 (ms)
CPU No. switching GD device first No. (3 points)	Set the start device number of the GD devices for CPU No. switching. (Default: 500) For the details, refer to the following. ☞ Page 1011 Start device number of the GD devices for CPU number switching	0 to 65520
Module No. switching GD device first No. (16 points)	Set the start device number of the GD devices for module No. switching. (Default: 550) For the details, refer to the following. ☞ Page 1012 Start device number of the GD devices for module number switching	0 to 65520
Servo axis switching GD device first No. (16 points)	Set the servo axis switching GD device first No. (Default: 10) For the details, refer to the following. ☞ Page 1013 Servo axis switching GD device first No.	0 to 65520

*1 Set different values for [GOT Station] of [Detail Setting] and [Station] of [Connected Ethernet Controller Setting].
☞ Page 1015 Connected Ethernet controller setting

*2 When assigning the same driver to the multiple channels, in the communication drivers set as the second and following, the default value of [GOT Communication Port No.] becomes the earliest number in the vacant numbers of No. 6000 and later.

Point

• Communication interface setting by Utility

The communication interface setting can be changed on the Utility's [Communication Settings] after writing [Controller Setting] of project data.

For details on the Utility, refer to the following manual.

📖GOT2000 Series User's Manual (Utility)

• Precedence in communication settings

When settings are made by GT Designer3 or the Utility, the latest setting is effective.

Start device number of the GD devices for CPU number switching

■Specifying a CPU number with a device

[CPU No.] can be specified with the GOT internal registers (GD devices) by specifying a value (100 to 102) to [CPU No.] in the device setting dialog in GT Designer3.

Set the start device number of the GD devices to be used in [CPU No. switching GD device first No. (3 points)].

Specify [CPU No.] with the three consecutive GD devices, starting the set device number.

When [500] is set to [CPU No. switching GD device first No. (3 points)], GD500 to GD502 are used to specify [CPU No.] as shown in the following table.

CPU No.	GD device	Setting range
100	GD500	1 to 4 Setting an invalid value causes a communication timeout error. Specifying a nonexistent CPU No. or a CPU No. not supporting a multiple CPU system with a device causes a controller error.
101	GD501	
102	GD502	

■Specifying a CPU number with a device on the initially-displayed screen

Set [CPU No. switching GD device first No. (3 points)] so that the values of the GD devices are retained and monitored upon the GOT startup.

■Specifying a CPU number with a device in a multi-channel connection

If the setting range of [CPU No. switching GD device first No. (3 points)] set in each channel overlaps, the monitoring target CPU No. set to each channel is switched simultaneously.

Set [CPU No. switching GD device first No. (3 points)] in each channel so that the setting range does not overlap.

■Specifying a CPU number and a station number with devices in a multi-channel connection

When GD10 to GD25 are used to specify the station No. of an inverter or non-Mitsubishi temperature controller connected, setting [10] to [CPU No. switching GD device first No. (3 points)] in a different channel switches the monitoring target CPU No. and station No. of an inverter or non-Mitsubishi temperature controller set to each channel simultaneously.

Set [CPU No. switching GD device first No. (3 points)] so that the setting range does not overlap the station No. of an inverter or non-Mitsubishi temperature controller.

Start device number of the GD devices for module number switching

■Specifying a module number with a device

In a connection via a simple motion module, [Unit No.] can be specified with the GOT internal registers (GD devices) by specifying a value (100 to 10F) to [Unit No.] in the device setting dialog in GT Designer3.
Set the start device number of the GD devices to be used in [Module No. switching GD device first No. (16 points)].
Specify [Unit No.] with the 16 consecutive GD devices, starting the set device number.
When [550] is set to [Module No. switching GD device first No. (16 points)], GD550 to GD565 are used to specify [Unit No.] as shown in the following table.

Unit No.	GD device	Setting range
100	GD550	The setting range depends on [Unit Type]. • When [MELSEC iQ-R, RnMT/NC/RT, CR800-D], [MELSEC iQ-R, RnMT/RT, CR800-D], [MELSEC-Q/QS, Q17nD/M/NC/DR/DSR, CRnD-700], [MELSEC-Q, Q17nD/M/DR/DSR, CRnD-700], [MELSEC-L] or [MELIPC] is selected for [Unit Type] 00 to FF • When [MELSEC iQ-F] is selected for [Unit Type] 01 to 10 Setting an invalid value causes a device range error.
101	GD551	
102	GD552	
103	GD553	
104	GD554	
105	GD555	
106	GD556	
107	GD557	
108	GD558	
109	GD559	
10A	GD560	
10B	GD561	
10C	GD562	
10D	GD563	
10E	GD564	
10F	GD565	

■Specifying a module number with a device on the initially-displayed screen

Set [Module No. switching GD device first No. (16 points)] so that the values of the GD devices are retained and monitored upon the GOT startup.

■Specifying a module number with a device in a multi-channel connection

If the setting range of [Module No. switching GD device first No. (16 points)] set in each channel overlaps, the module No. of the simple motion module via the servo amplifier device of each channel is switched simultaneously.
Set [Module No. switching GD device first No. (16 points)] for each channel so that the setting range does not overlap.

■Specifying a station number and a module number with devices in a multi-channel connection

When GD10 to GD25 are used to specify the station No. of an inverter or non-Mitsubishi temperature controller connected, setting [10] to [Module No. switching GD device first No. (16 points)] switches the module No. of the simple motion module via the servo amplifier device and the station No. of an inverter or non-Mitsubishi temperature controller set to each channel simultaneously.
Set [Module No. switching GD device first No. (16 points)] so that the setting range does not overlap the station No. of an inverter or non-Mitsubishi temperature controller.

Servo axis switching GD device first No.

■Indirect specification of the servo axis No.

In a connection via a Motion CPU or Simple Motion module, a servo axis No. can be indirectly specified with GOT internal registers (GD devices) by specifying a value (100 to 115) to the axis No. of the servo amplifier device.
Set the start device number of the GD devices to be used in [Servo axis switching GD device first No. (16 points)].
Specify a servo axis number with 16 consecutive GD devices, starting the set device number.
When [10] is set to [Servo axis switching GD device first No. (16 points)], GD10 to GD25 are used to specify a servo axis number as shown in the following table.

Servo axis No.	GD device	Setting range
100	GD10	1 to 64 Setting an invalid value causes a device range error.
101	GD11	
102	GD12	
103	GD13	
104	GD14	
105	GD15	
106	GD16	
107	GD17	
108	GD18	
109	GD19	
110	GD20	
111	GD21	
112	GD22	
113	GD23	
114	GD24	
115	GD25	

■Specifying a servo axis number with a device on the initially-displayed screen

Set [Servo axis switching GD device first No. (16 points)] so that the values of the GD devices are retained and monitored upon the GOT startup.

■Specifying a servo axis number with a device in a multi-channel connection

If the setting rage of [Servo axis switching GD device first No. (16 points)] set in each channel overlaps, the axis No. of the servo amplifier of each channel is switched simultaneously.
Set [Servo axis switching GD device first No. (16 points)] for each channel so that the setting range does not overlap.

■Specifying a station number and a servo axis number with devices in a multi-channel connection

When GD10 to GD25 are used to specify the station No. of an inverter or non-Mitsubishi temperature controller connected, setting [10] to [Servo axis switching GD device first No. (16 points)] switches the axis No. of the servo amplifier and the station No. of an inverter or non-Mitsubishi temperature controller set to each channel simultaneously.
Set [Servo axis switching GD device first No. (16 points)] so that the setting range does not overlap the station No. of an inverter or non-Mitsubishi temperature controller.

GOT Ethernet setting

The GOT can be connected to a different network by configuring the following setting.

GOT IP address setting

Set the following communication port setting.

- Standard port (When using GT25-W or GS25: Port 1)
- Extended port (When using GT25-W or GS25: Port 2)

GOT Ethernet common setting

Set the following setting which is common to the standard port and the extended port, or port 1 and port 2.

- [Default Gateway]
- [Peripheral S/W Communication Port No.]
- [Transparent Port No.]

IP filter setting

By configuring the IP filter setting, the access from the specific IP address can be permitted or shut off.

For the detailed settings, refer to the following manual.

☞ Page 50 GOT Ethernet Setting

Connected Ethernet controller setting

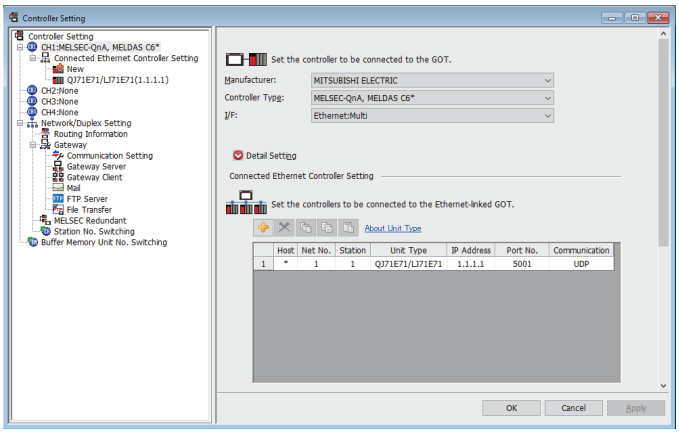

Item	Description	Range
Host	The host is displayed. It refers to a station that can be connected without setting a station number. (The host is indicated with an asterisk (*))	—
Net No.	Set the network No. of the connected Ethernet module. (Default: 1)	Network No. of CNC*1
Station*2	Set the station No. of the connected Ethernet module. (Default: 1)	Station No. of CNC
Unit Type	Set the type of the connected Ethernet module. (Default: QJ71E71/LJ71E71)	AJ71QE71
IP Address	Set the IP address of the connected Ethernet module. (Default: 1.1.1.1)	IP address of CNC
Port No.	Set the port No. of the connected Ethernet module. (Default: 5001)	5001
Communication	UDP (fixed)	UDP (fixed)

*1 For operating CNC monitor function, set N/W No. to "239".

*2 Set different values for [GOT Station] of [Detail Setting] and [Station] of [Connected Ethernet Controller Setting].

☞ Page 1006 Communication detail settings

18.5 CNC Side Settings

MELSECNET/10 connection

Parameter setting

Set parameters related to MELSECNET/10 with MELSEC's peripheral devices in the same way as parameter setting of MELSEC CPU, and write them on CNC by Personal computer. However, in the case of using the default parameters or not requiring separate settings due to normal stations, it is not necessary to set the network

■Control Station Parameter

If you wish to place the control station in CNC and set the common parameters, set the network parameters by peripheral device and write them on CNC. An example of parameter setting by GPPW is as follows. Set the first I/O No. as follows according to the expansion slot to which the unit is inserted.

- Start I/O No.

Slot	Start I/O No.	Slot position
EXT1	0200	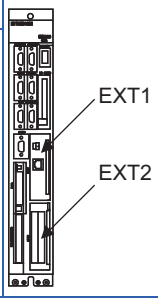
EXT2	0280	

- Example of GX Developer setting

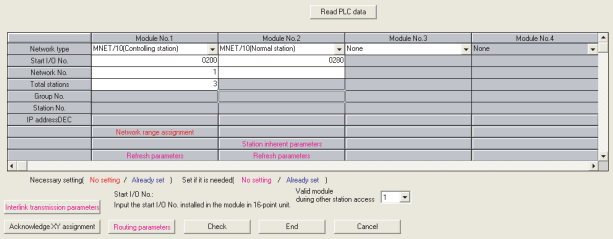

For details of the parameter setting, refer to the following.

📖C6/C64/C64T NETWORK INSTRUCTION MANUAL BNP-B2373

■Normal Station Parameter

As for normal stations, it is not necessary to set parameters unless separate settings are required.

The refresh parameters are set and written as required. In this case, the parameter setting of the first I/O No. is the same as in the case of the control station.

Expansion unit settings

■FCU6-EX879 (Optical fiber cable)

No.	Switch name	Settings
1)	Condition setting switch 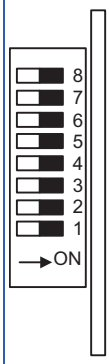	Set the operation condition.

SW	Description	OFF				ON			
1	Network type*1	Inter-PC net (PC)				Remote I/O net			
2	Station type*4	Normal station (N.ST)				Control station (MNG)			
3	Used parameter*2	Common parameters (PRM)				Default parameter (D.PRM)			
4	Number of stations*2 (Valid when SW3 is ON)	OFF	8 Station	ON	16 Station	OFF	32 Station	ON	64 Station
5		OFF		OFF		ON		ON	
6	B/W total points*2 (Valid when SW3 is ON)	OFF	2K points	ON	4K points	OFF	6K points	ON	8K points
7		OFF		OFF		ON		ON	
8	Not used	Always OFF							

2)	Station number setting switch 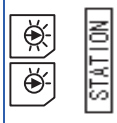	Station number setting*2*3 (Setting range) 01 to 64: Station number Other than 01 to 64: Setting error
3)	Setting switch of group number	Group number setting Not used, fixed to 0
4)	Setting switch of network number 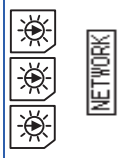	Network number setting*2 (Setting range) 001 to 255: Network number Other than 001 to 255: Setting error
5)	Mode setting switch	Mode setting*2 0: Online 1: Cannot be used 2: Offline 3 to F: Test mode

*1 Set the network type to the PLC to PLC network.
*2 Set as necessary.
*3 Set the station No. not to overlap with that of other units.
*4 Set the station type to the control station.
For details of the parameter setting, refer to the following.
📖C6/C64/C64T NETWORK INSTRUCTION MANUAL BNP-B2373

■FCU6-EX878 (Coaxial cable)

Switch layout	No.	Switch name	Settings
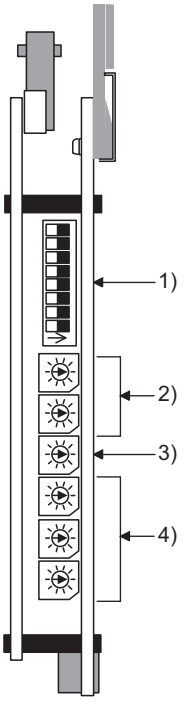	1)	Condition setting switch 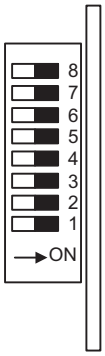	Set the operation condition. SW / Description / OFF / ON 1 / Network type*1 / Inter-PC net (PC) / Remote I/O net 2 / Station type*4 / Normal station (N.ST) / Control station (MNG) 3 / Used parameter *2 / Common parameters (PRM) / Default parameter (D.PRM) 4, 5 / Number of stations*2 (Valid when SW3 is ON) / 4: OFF, 5: OFF / 8 Station / 4: ON, 5: OFF / 16 Station / 4: OFF, 5: ON / 32 Station / 4: ON, 5: ON / 64 Station 6, 7 / B/W total points*2 (Valid when SW3 is ON) / 6: OFF, 7: OFF / 2K points / 6: ON, 7: OFF / 4K points / 6: OFF, 7: ON / 6K points / 6: ON, 7: ON / 8K points 8 / Not used / Always OFF
	2)	Station number setting switch 	Station number setting*2*3 (Setting range) 01 to 64: Station number Other than 01 to 64: Setting error
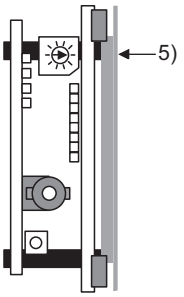	3)	Setting switch of group number 	Group number setting Not used, fixed to 0
	4)	Setting switch of network number 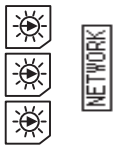	Network number setting*2 (Setting range) 001 to 255: Network number Other than 001 to 255: Setting error
	5)	Mode setting switch 	Mode setting*2 0: Online 1: Cannot be used 2: Offline 3 to F: Test mode

*1 Set the network type to the PLC to PLC network.
*2 Set as necessary.
*3 Set the station No. not to overlap with that of other units.
*4 Set the station type to the control station.
For details of the parameter setting, refer to the following.
C6/C64/C64T NETWORK INSTRUCTION MANUAL BNP-B2373

CC-Link(ID) connection to MELDAS C6/C64

Parameter setting

Set parameters related to CC-Link connection with GX Developer and write them to CNC by PLC. However, in the case of using the local stations, it is not necessary to set the network parameters.

■Master station parameter

It is necessary to set and write the network parameters to CNC with GX Developer. The following shows an example of parameter settings.Set the first I/O No. as follows according to the expansion slot to which the unit is inserted.

- Start I/O No.

Slot	Start I/O No.	Slot position
EXT1	0200	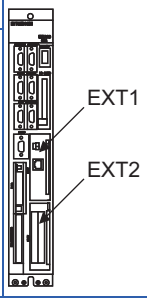
EXT2	0280	

- Example of GX Developer setting

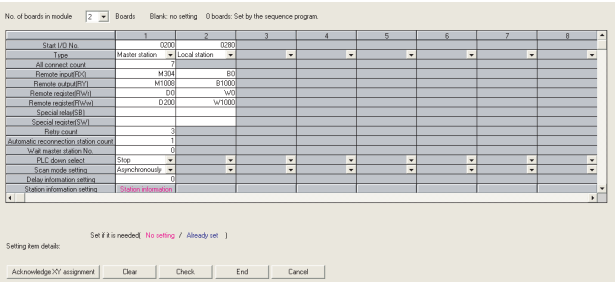

For details of the parameter setting, refer to the following.

📖C6/C64/C64T NETWORK INSTRUCTION MANUAL BNP-B2373

Expansion unit settings

Make the communication settings by the setting switch in the expansion unit (FCU6-HR865).

■Expansion unit

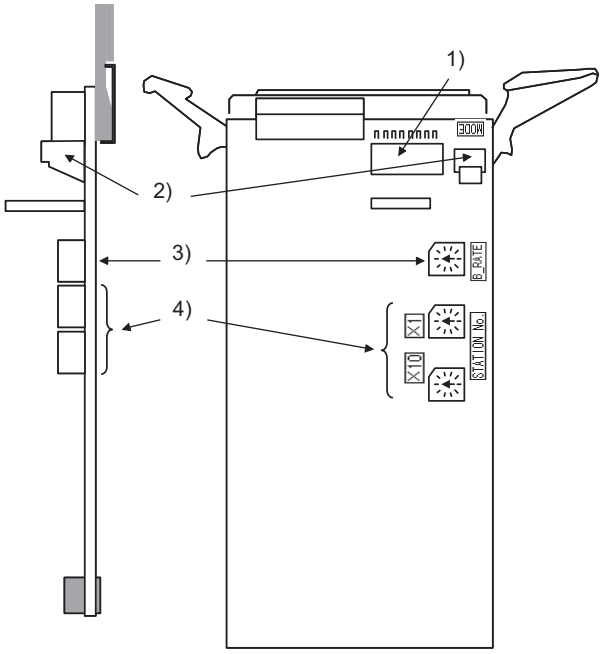

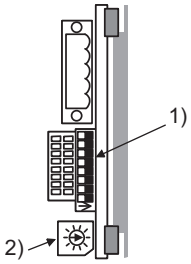

■Contents of setting

No.	Switch name	Settings
1)	Condition setting switch 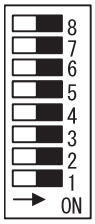	Set the operation condition.

No.	Description	Switch status								Setting validity	
		OFF				ON				Master station (Standby master station)	Local station (Standby master station)
SW1	Station type*1	Master station/local station				Standby master station				(Valid)	(Valid)
SW2	Not used	Always OFF								-	-
SW3	Not used	Always OFF								-	-
SW4	Data link error station input data status*1	Clear				Hold				valid	valid
SW4	Number of occupied stations*1	OFF	1 Station	OFF	2 Station	ON	3 Station	ON	4 Station	Invalid	valid
SW5		OFF		ON		ON		OFF			
SW7	Not used	Always OFF								-	-
SW8	Not used	Always OFF								-	-

No.	Switch name	Settings
2)	Mode setting switch	This switch sets the unit operation status.

No.	Name	Description	Settability	
			Master station	Local station
0	Online*1	Automatic online return provided when data link is enabled	Yes	Yes
1		Link with remote I/O net mode	Yes	No
2	Offline*1	Data link offline state	Yes	Yes
3	Line test 1*1	Line test 1 in offline state	Yes	No
4	Line test 2*1	Line test 2 in offline state	Yes	No
5	Parameter confirmation test*1	Checks the parameter details	Yes	No
6	Hardware test*1	Test Expansion unit (FCU6-HR865)	Yes	Yes
7 to F	Not usable			

No.	Switch name	Settings
3)	Transmission speed setting switch	This switch sets the unit transmission speed.

No.	Description
0	156Kbps*1
1	625Kbps*1
2	2.5Mbps*1
3	5Mbps*1
4	10Mbps*1
5 to F	Not usable

No.	Switch name	Settings
4)	Setting switch of station No. 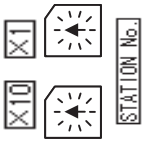	This switch sets the unit station No.*1*2 (Setting range) Master station: 00 Local station: 01 to 64 Standby master station: 01 to 64

*1 Set as necessary.

*2 Set the station No. not to overlap with that of other units.
For details of the parameter setting, refer to the following.
C6/C64/C64T NETWORK INSTRUCTION MANUAL BNP-B2373

CC-Link(ID) connection to M800/M80, M700VS/M70V series

For details of the CC-Link settings of M800/M80, M700VS/M70V series, please contact our company.

Ethernet connection

System configuration

The following shows the example of the system configuration when using the CNC monitor function.

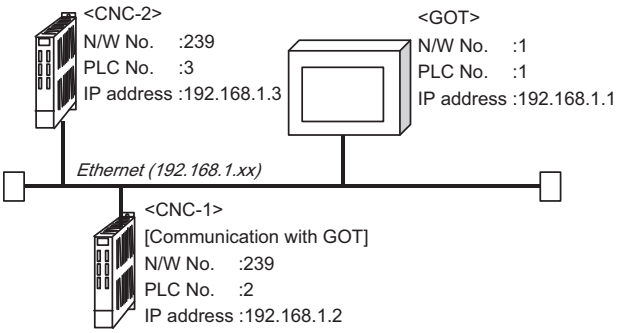

Parameter setting

Set parameters related to Ethernet with MELSEC's peripheral devices in the same way as parameter setting of MELSEC CPU, and write them on CNC by Personal computer.

■Network parameter setting

Set the network parameters by peripheral device and write them on CNC. An example of parameter setting by GPPW is as follows. Set the first I/O No. as follows according to the expansion slot to which the unit is inserted.

- Unit No.

Slot position	Start I/O No.	Mounting position of extension unit
EXT1	0200	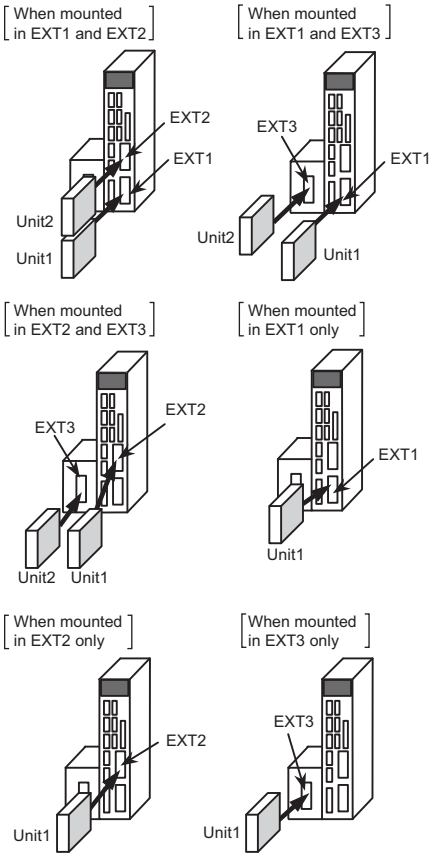
EXT2	0280	
EXT3	0300	

- Example of GX Developer setting

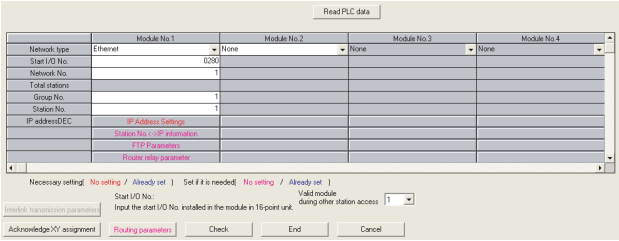

For details of the parameter setting, refer to the following.

📖C6/C64/C64T NETWORK INSTRUCTION MANUAL BNP-B2373

Point

IP address setting

IP address setting on GX Developer is invalid.

Set the IP address by the 7-segment LED and rotary switch of the CNC side, referring to the next page.

■CNC side parameter setting

Confirm the CNC side parameter setting with the settings of IP address, gateway address, subnet mask and port No. by the 7-segment LED and rotary switch of the CNC side.

For details of the parameter setting operation, refer to the following.

📖C6/C64/C64T NETWORK INSTRUCTION MANUAL BNP-B2373 IV Setting the Ethernet IP Address

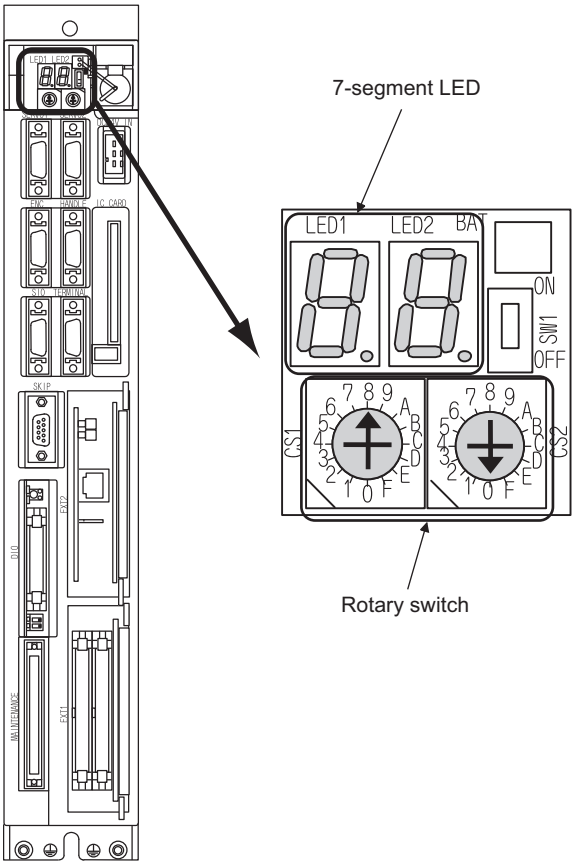

18.6 Settable Device Range

For the device setting dialog, refer to the following.

☞ Page 1384 Device setting dialog (Mitsubishi Electric equipment)

For details of the device range that can be used on the GOT, refer to the following.

☞ Page 1514 [MELSEC QnA, MELDAS C6*]

18.7 Precautions

Direct CPU connection (serial)

Version of CNC

For MELDAS C6/C64, use NC system software version D0 or later.

MELSECNET/10 connection

Network configuration

Use the MELSECNET/10 mode of MELSECNET/H (PLC to PLC network) or MELSECNET/10 (PLC to PLC network) to configure a network including the GOT.

■The following networks including the GOT cannot be configured.

- MELSECNET/10 (Remote I/O network)
- MELSECNET/H (Remote I/O network)

■When configuring the network (MELSECNET/H (PLC to PLC network) including the GOT, refer to the following.

☞ Page 541 MELSECNET/H, MELSECNET/10 CONNECTION (PLC TO PLC NETWORK)

Monitoring range

Only CNC of the same networks No. can be monitored in GOT.

For the access range that can be monitored, refer to the following.

☞ Page 92 Access Range for Monitoring Stations on Network Systems

Starting GOT with CNC connection (MELSECNET/10 connection)

With the CNC connection (MESLSECNET/10 connection), the data link starts approximately 10 seconds after the GOT starts.

When a network error occurs in the system alarm

When a system alarm regarding a network error occurs with the CNC connection (MELSECNET/10 connection), the system alarm is kept displaying on the GOT even though the error factor is removed.

To cancel the system alarm display, restart the GOT.

Version of CNC

For MELDAS C6/C64, use NC system software version E0 or later.

CC-Link (ID) connection

Using cyclic transmission

■I/O signal for master station

Do not turn on the reserved output signals in the output signals (remote output: RY) to the GOT from the master station.
When the reserved output signal is turned on, the CNC system may be malfunctioned.
For the assignment of I/O signals in the GOT, refer to the following manual.
📖MODEL GT15-J61BT13 CC-Link communication unit User's Manual
📖GT15 CC-Link communication unit User's Manual

■CC-Link Mode

It's different in the correspondence version of CC-Link depending on the models of CNC.
MELDAS C6/C64: Ver.1 only correspondence
M700VS/M70V: Ver.2, Ver.1 correspondence
M800/M80:Ver.2, Ver.1 correspondence

■When GOT malfunctions

The cyclic output status remains the same as before becoming faulty.

For transient transmission

■Access range that can be monitored

The GOT can access to the CNC mounting the master and local station of the CC-Link System.
It cannot access another network via the CC-Link module.

GOT startup in CNC connection (CC-Link connection (intelligent device station))

In the CNC connection (CC-Link connection (intelligent device station)), the data link is started approximately 10 seconds after the GOT startup.

When a network error occurs in the system alarm

In the CNC connection (CC-Link connection (intelligent device station)), when a network error occurs in the system alarm, the system alarm message cannot be canceled even though the causes are removed.
To cancel the system alarm display, restart the GOT.

Version of CNC

For MELDAS C6/C64, use NC system software version D0 or later.

Ethernet connection

Via network system

GOT with Ethernet communication cannot access the CNCs in another network via the CNC (network module, Ethernet module, etc.).

When connecting to multiple GOTs

When connecting two or more GOTs in the Ethernet network, set each [PLC No.] to the GOT.

☞ Page 1005 Setting communication interface (Controller Setting)

When connecting to the multiple network equipment (including GOT) in a segment

By increasing the network load, the transmission speed between the GOT and CNC may be reduced.

The following actions may improve the communication performance.

- Using a switching hub
- More high speed by 100BASE-TX (100Mbps)
- Reduction of the monitoring points on GOT

Ethernet cable connection

Ethernet cable is so susceptible to noise that you should wire power cables and electric supply cables separately. And you need to attach a ferrite core (attachment) on the control unit side.

For details of the Ethernet cable connection, refer to the following

📖C6/C64/C64T NETWORK INSTRUCTION MANUAL BNP-B2373 IX Connection Function with GOT

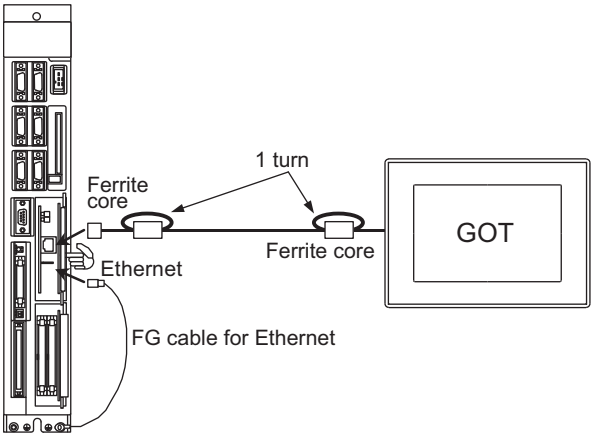

Version of CNC

For MELDAS C6/C64, use NC system software version D0 or later.

19 LASER DISPLACEMENT SENSOR MH11 CONNECTION

- Page 1027 Connectable Model List
- Page 1027 System Configuration
- Page 1028 Connection Diagram
- Page 1029 GOT Side Settings
- Page 1031 Laser Displacement Sensor MH11 Side Settings
- Page 1031 Settable Device Range

19.1 Connectable Model List

The following table shows the connectable models.

Series	Model name	Clock	Communication type	Connectable model	Refer to
Laser Displacement Sensor MH11	MH11CTMF-N	×	RS-232	GT 21 03P 04P R2 *1	☞ Page 1027 Connection to the Laser Displacement Sensor MH11
	MH11CTMF-NNA				
	MH11CTMF-P				
	MH11CTMF-PNA				

*1 GT2104-PMBDS2 only supported.

19.2 System Configuration

Connection to the Laser Displacement Sensor MH11

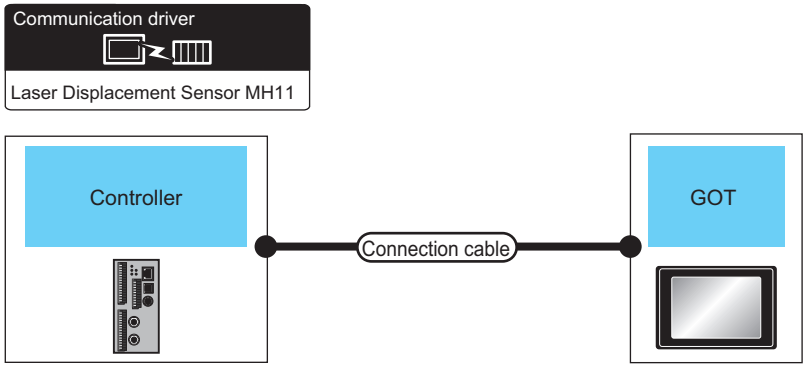

Controller		Connection cable		GOT		Number of connectable equipment
Series	Communication type	Connection cable Connection diagram number	Max. distance	Option device	Model	
MH11CTMF-N MH11CTMF-NNA MH11CTMF-P MH11CTMF-PNA (CONSOLE port)	RS-232	MH11C30R2*1	3m	- (Built into GOT)	GT 21 03P 04P R2 *2	1 GOT for 1 Controller

*1 For the connection to GOT, refer to the following connection diagram.
☞ Page 1028 RS-232 connection diagram 1)

*2 GT2104-PMBDS2 only supported.

19.3 Connection Diagram

The following diagram shows the connection between the GOT and the Controller.

RS-232 cable

Connection Diagram

■RS-232 connection diagram 1)

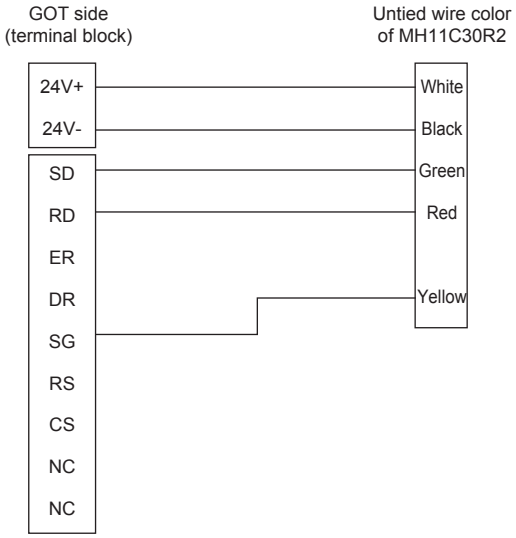

Precautions when preparing a cable

■Cable length

The length of the RS-232 cable must be within the maximum distance specifications.

■GOT side connector

For the GOT side connector, refer to the following.

☞ Page 64 GOT connector specifications

19.4 GOT Side Settings

Setting the communication interface (Controller setting)

Set the channel of the connected equipment.

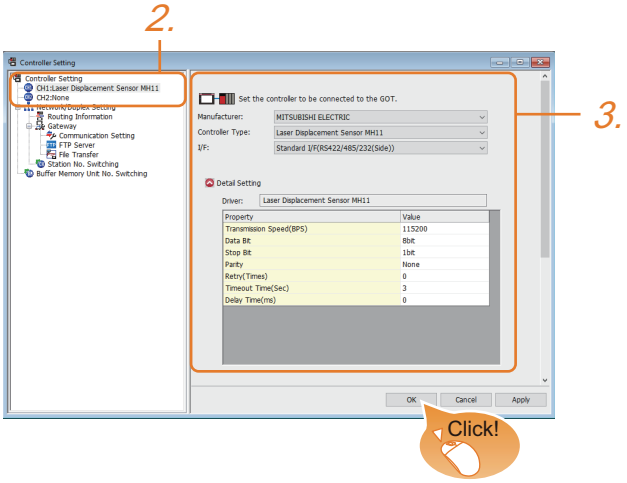

1. Select [Common] → [Controller Setting] from the menu.

2. In the [Controller Setting] window, select the channel No. to be used from the list menu.

3. Set the following items.

- [Manufacturer]: [MITSUBISHI ELECTRIC]
- [Controller Type]: [Laser Displacement Sensor MH11]
- [I/F]: Interface to be used
- [Detail Setting]: Configure the settings according to the usage environment.

☞ Page 1030 Communication detail settings

4. When you have completed the settings, click the [OK] button.

Point

The settings of connecting equipment can be confirmed in [I/F Communication Setting].
For details, refer to the following.
☞ Page 54 I/F communication setting

Communication detail settings

Make the settings according to the usage environment.

Laser Displacement Sensor MH11

Property	Value
Transmission Speed(BPS)	115200
Data Bit	8bit
Stop Bit	1bit
Parity	None
Retry(Times)	0
Timeout Time(Sec)	3
Delay Time(ms)	0

Item	Description	Range
Transmission Speed*1	Set this item when change the transmission speed used for communication with the connected equipment. (Default: 115200bps)	9600bps, 19200bps, 38400bps, 57600bps, 115200bps
Data Bit*1	Set this item when change the data length used for communication with the connected equipment. (Default: 8bit)	7bit/8bit
Stop Bit*1	Specify the stop bit length for communications. (Default: 1bit)	1bit/2bit
Parity*1	Specify whether or not to perform a parity check, and how it is performed during communication. (Default: None)	None Even Odd
Retry	Set the number of retries to be performed when a communication timeout occurs. (Default: 0time)	0 to 5times
Timeout Time	Set the time period for a communication to time out. (Default: 3sec)	1 to 30sec
Delay Time	Set this item to adjust the transmission timing of the communication request from the GOT. (Default: 0ms)	0 to 300ms

*1 Set the value as follows:
Transmission Speed: 15200bps(Default values)
Data Bit: 8bit(Default values)
Stop Bit: 1bit(Default values)
Parity: None(Default values)

Point

• Communication interface setting by the Utility

The communication interface setting can be changed on the Utility's [Communication setting] after writing [Controller Setting] of project data.

For details on the Utility, refer to the following manual.

GOT2000 Series User's Manual (Utility)

• Precedence in communication settings

When settings are made by GT Designer3 or the Utility, the latest setting is effective.

19.5 Laser Displacement Sensor MH11 Side Settings

Connection to laser displacement sensor MH11

Communication settings

Communication settings are not required, since the following contents are fixed.

Setting item	Controller Side Settings
Communication speed	115200bps (fixed)
Data Bit	8bit (fixed)
Parity bit	None (fixed)
Stop bit	1bit (fixed)

19.6 Settable Device Range

For the device setting dialog, refer to the following.

☞ Page 1384 Device setting dialog (Mitsubishi Electric equipment)

For details on the device range that can be used on the GOT, refer to the following.

☞ Page 1745 [Laser Displacement Sensor MH11]

MEMO

PART 4 MULTIPLE GOT CONNECTIONS

20 GOT MULTI-DROP CONNECTION

21 MULTIPLE-GT21 CONNECTION FUNCTION

20 GOT MULTI-DROP CONNECTION

- Page 1034 CPU that can be Monitored
- Page 1035 Connectable Model List
- Page 1052 System Configuration
- Page 1055 Connection Diagram
- Page 1061 GOT Side Settings
- Page 1063 Settings of Serial Multi-Drop Connection Unit
- Page 1070 Precautions

20.1 CPU that can be Monitored

The GOT can monitor only a CPU to which a serial multi-drop connection unit (GT01-RS4-M) is connected directly.

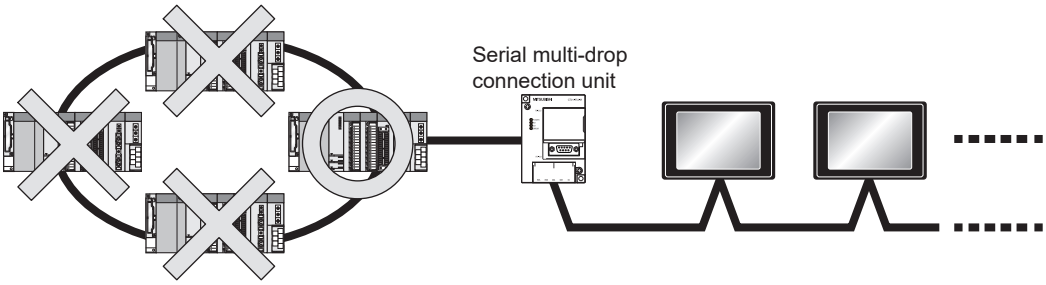

20.2 Connectable Model List

Direct CPU connection (serial)

The following table shows the connectable models for direct CPU connection (serial) of the CPU and serial multi-drop connection unit.

Series	Model name	Clock	Communication type		Connectable model
			Between CPU and serial multi-drop connection unit	Between serial multi-drop connection unit and GOT	
MELSEC iQ-R Series	R00CPU	○	RS-232 RS-422	RS-485	-
	R01CPU				
	R02CPU				
	R04CPU				
	R08CPU				
	R16CPU				
	R32CPU				
	R120CPU				
	R08PCPU				
	R16PCPU				
	R32PCPU				
	R120PCPU				
	R04ENCPU				
	R08ENCPU				
	R16ENCPU				
	R32ENCPU				
	R120ENCPU				
	R08PSFCPU				
	R16PSFCPU				
	R32PSFCPU				
	R120PSFCPU				
	R08SFCPU				
	R16SFCPU				
	R32SFCPU				
	R120SFCPU				
Motion CPU (MELSEC iQ-R Series)	R16MTCPU	○	RS-232 RS-422	RS-485	-
	R32MTCPU				
	R64MTCPU				
C Controller module (MELSEC iQ-R Series)	R12CCPU-V	○	RS-232 RS-422	RS-485	-
MELSECWinCPU (MELSEC iQ-R Series)	R102WCPU-W	×	RS-232 RS-422	RS-485	-
CNC C80	R16NCCPU-S1	○	RS-232 RS-422	RS-485	-
Robot controller (MELSEC iQ-R Series)	CR800-R(R16RTCPU)	○	RS-232 RS-422	RS-485	-

Series	Model name	Clock	Communication type		Connectable model
			Between CPU and serial multi-drop connection unit	Between serial multi-drop connection unit and GOT	
MELSEC iQ-F Series	FX5U	○	RS-232 RS-422	RS-485	-
	FX5UC				
	FX5UJ				
	FX5S				

Series	Model name	Clock	Communication type		Connectable model
			Between CPU and serial multi-drop connection unit	Between serial multi-drop connection unit and GOT	
MELSEC-Q (Q mode)*4	Q00JCPU	○	RS-232 RS-422	RS-485	GT27 GT25 GT23 GT21 07W GT21 05Q GT21 04R GT21 03P 04P ET/R4 GT21 03P 04P R4 GS25 GS21 *12
	Q00JCPU				
	Q00CPU*1				
	Q01CPU*1				
	Q02CPU*1				
	Q02HCPU*1				
	Q06HCPU*1				
	Q12HCPU*1				
	Q25HCPU*1				
	Q02PHCPU	○	-	-	-
	Q06PHCPU				
	Q12PHCPU				
	Q25PHCPU				
	Q12PRHCPU (Main base)				
	Q25PRHCPU (Main base)				
	Q12PRHCPU (Extension base)	○	-	-	-
	Q25PRHCPU (Extension base)				
	Q00UJCPU Q00UJCPU-S8	○	RS-232 RS-422	RS-485	GT27 GT25 GT23 GT21 07W GT21 05Q GT21 04R GT21 03P 04P ET/R4 GT21 03P 04P R4 GS25 GS21 *12
	Q00UCPU				
	Q01UCPU				
	Q02UCPU				
	Q03UDCPU				
	Q04UDHCPU				
	Q06UDHCPU				
	Q10UDHCPU				
	Q13UDHCPU				
	Q20UDHCPU				
	Q26UDHCPU				
	Q03UDECPU	○	RS-232	RS-485	GT27 GT25 GT23 GT21 07W GT21 05Q GT21 04R GT21 03P 04P ET/R4 GT21 03P 04P R4 GS25 GS21 *2*12
	Q04UDEHCPU				
	Q06UDEHCPU				
	Q10UDEHCPU				
	Q13UDEHCPU				
	Q20UDEHCPU				
	Q26UDEHCPU				
	Q50UDEHCPU				
	Q100UDEHCPU				
	Q03UDVCPU				
	Q04UDVCPU				
	Q06UDVCPU				
	Q13UDVCPU				
	Q26UDVCPU				

Series	Model name	Clock	Communication type		Connectable model
			Between CPU and serial multi-drop connection unit	Between serial multi-drop connection unit and GOT	
C Controller module (Q Series)	Q12DCCPU-V*3	○	RS-232	RS-485	GT27 GT25 GT23 GT21 07W GT21 05Q GT21 04R GT21 03P 04P ET/R4 GT21 03P 04P R4 GS25 GS21 *2*12
	Q24DHCCPU-V/VG				
	Q24DHCCPU-LS				
	Q26DHCCPU-LS	○	RS-232	RS-485	-
MELSEC-QS*4	QS001CPU	○	-	-	-
MELSEC-L*4	L02CPU*5 L06CPU*5 L26CPU*5 L26CPU-BT*5 L02CPU-P*5 L06CPU-P*5 L26CPU-P*5 L26CPU-PBT*5 L02SCPU L02SCPU-P	○	RS-232 RS-422	RS-485	GT27 GT25 GT23 GT21 07W GT21 05Q GT21 04R GT21 03P 04P ET/R4 GT21 03P 04P R4 GS25 GS21 *12
MELSEC-Q (A mode)*4	Q02CPU-A Q02HCPU-A Q06HCPU-A	○	RS-232 RS-422	RS-485	GT27 GT25 GT23 GT21 07W GT21 05Q GT21 04R GT21 03P 04P ET/R4 GT21 03P 04P R4 GS25 GS21 *12
MELSEC-QnA (QnACPU)*4	Q2ACPU Q2ACPU-S1 Q3ACPU Q4ACPU	○	RS-422	RS-485	GT27 GT25 GT23 GT21 07W GT21 05Q GT21 04R GT21 03P 04P ET/R4 GT21 03P 04P R4 GS25 GS21 *12
	Q4ARCPU	○	RS-422	RS-485	-
MELSEC-QnA (QnASCPU)*4	Q2ASCPU Q2ASCPU-S1 Q2ASHCPU Q2ASHCPU-S1	○	RS-422	RS-485	GT27 GT25 GT23 GT21 07W GT21 05Q GT21 04R GT21 03P 04P ET/R4 GT21 03P 04P R4 GS25 GS21 *12
MELSEC-A (AnCPU)*6	A2UCPU A2UCPU-S1 A3UCPU A4UCPU A2ACPU A2ACPUP21 A2ACPUR21 A2ACPU-S1 A2ACPUP21-S1 A2ACPUR21-S1 A3ACPU A3ACPUP21 A3ACPUR21 A1NCPU*7 A1NCPUP21*7 A1NCPUR21*7 A2NCPU*7 A2NCPUP21*7 A2NCPUR21*7 A2NCPU-S1*7 A2NCPUP21-S1*7 A2NCPUR21-S1*7 A3NCPU*7 A3NCPUP21*7 A3NCPUR21*7	○	RS-422	RS-485	GT27 GT25 GT23 GT21 07W GT21 05Q GT21 04R GT21 03P 04P ET/R4 GT21 03P 04P R4 GS25 GS21 *12

Series	Model name	Clock	Communication type		Connectable model
			Between CPU and serial multi-drop connection unit	Between serial multi-drop connection unit and GOT	
MELSEC-A (AnSCPU)*6	A2USCPU	○	RS-422	RS-485	GT27 GT25 GT23 GT21 07W GT21 05Q GT21 04R GT21 03P 04P ET/R4 GT21 03P 04P R4 GS25 GS21 *12
	A2USCPU-S1				
	A2USHCPU-S1				
	A1SCPU				
	A1SCPUC24-R2				
	A1SHCPU				
	A2SCPU*8				
	A2SHCPU				
	A1SJCPU				
	A1SJCPU-S3				
	A1SJHCPU				
MELSEC-A*6	A0J2HCPU*8	×	RS-422	RS-485	GT27 GT25 GT23 GT21 07W GT21 05Q GT21 04R GT21 03P 04P ET/R4 GT21 03P 04P R4 GS25 GS21 *12
	A0J2HCPUP21*8				
	A0J2HCPUR21*8				
	A0J2HCPU-DC24*8				
	A2CCPU*8	○	RS-422	RS-485	GT27 GT25 GT23 GT21 07W GT21 05Q GT21 04R GT21 03P 04P ET/R4 GT21 03P 04P R4 GS25 GS21 *12
	A2CCPUP21				
	A2CCPUR21				
	A2CCPUC24				
	A2CCPUC24-PRF				
	A2CJCPU-S3				
	A1FXCPU				
Motion CPU (Q Series)	Q172CPU*9*10	○	RS-232 RS-422	RS-485	GT27 GT25 GT23 GT21 07W GT21 05Q GT21 04R GT21 03P 04P ET/R4 GT21 03P 04P R4 GS25 GS21 *12
	Q173CPU*9*10				
	Q172CPUN*9				
	Q173CPUN*9				
	Q172HCPU	○	RS-232	RS-485	GT27 GT25 GT23 GT21 07W GT21 05Q GT21 04R GT21 03P 04P ET/R4 GT21 03P 04P R4 GS25 GS21 *2*12
	Q173HCPU				
	Q172DCPU				
	Q173DCPU				
	Q172DCPU-S1				
	Q173DCPU-S1				
	Q172DSCPU				
	Q173DSCPU				
	Q170MCPU	○	RS-232	RS-485	GT27 GT25 GT23 GT21 07W GT21 05Q GT21 04R GT21 03P 04P ET/R4 GT21 03P 04P R4 GS25 GS21 *12
	Q170MSCPU				
	Q170MSCPU-S1				
	MR-MQ100				

Series	Model name	Clock	Communication type		Connectable model
			Between CPU and serial multi-drop connection unit	Between serial multi-drop connection unit and GOT	
Motion CPU (A Series)*6	A273UCPU	○	-	-	-
	A273UHCPU	○			
	A273UHCPU-S3				
	A373UCPU	○			
	A373UCPU-S3				
	A171SCPU				
	A171SCPU-S3				
	A171SCPU-S3N				
	A171SHCPU	○	RS-422	RS-485	-
	A171SHCPUN				
	A172SHCPU				
	A172SHCPUN				
	A173UHCPU				
	A173UHCPU-S1				
MELSEC-WS	WS0-CPU0	×	RS-232	-	-
	WS0-CPU1				
	WS0-CPU3				
MELSECNET/H remote I/O station	QJ72LP25-25	×	RS-232	-	-
	QJ72LP25G				
	QJ72BR15				
CC-Link IE Field Network head module	LJ72GF15-T2	×	-	-	-
CC-Link IE Field Network Ethernet adapter module	NZ2GF-ETB	×	-	-	-
CNC C70	Q173NCCPU	○	RS-232	-	-
Robot controller (Q Series)	CRnQ-700(Q172DRCPU) CR750-Q(Q172DRCPU) CR751-Q(Q172DRCPU) CR800-Q(Q172DSRCPU)	○	RS-232	-	-
MELSEC-FX	FX0	×	RS-422	RS-485	GT27 GT25 GT23 GT21 07W GT21 05Q GT21 04R GT21 03P 04P ET/R4 GT21 03P 04P R4 GS25 GS21 *12
	FX0S	×			
	FX0N				
	FX1	×			
	FX2	×*11			
	FX2C				
	FX1S	○	RS-232 RS-422	RS-485	GT27 GT25 GT23 GT21 07W GT21 05Q GT21 04R GT21 03P 04P ET/R4 GT21 03P 04P R4 GS25 GS21 *12
	FX1N				
	FX2N				
	FX1NC				
	FX2NC	×*11			
	FX3S	○			
	FX3G				
	FX3GC				
	FX3GE				
	FX3U				
	FX3UC				

Series	Model name	Clock	Communication type		Connectable model
			Between CPU and serial multi-drop connection unit	Between serial multi-drop connection unit and GOT	
FR-A500(L)	FR-A5□0(L)	×	-	-	-
FR-F500(L)	FR-F5□0(L)				
FR-V500(L)	FR-V5□0(L)				
FR-E500	FR-E5□0(C) FR-E5□0S FR-E5□0W	×	-	-	-
FR-S500(E)	FR-S5□0(E)(-R)(-C) FR-S5□0S(E)(-R) FR-S5□0W(E)(-R)				
FR-F500J	FR-F5□0J(F)				
FR-D700	FR-D7□0 FR-D7□0S FR-D7□0W				
FR-F700PJ	FR-F7□0PJ(F)				
FR-E700	FR-E7□0 FR-E7□0S FR-E7□0W				
	FR-E7□0-NE				
FR-A700	FR-A7□0				
FR-F700	FR-F7□0				
FR-F700P	FR-F7□0P				
FR-A800	FR-A8□0 FR-A8□2 FR-A8□6				
FR-A800-E	FR-A8□0-E FR-A8□2-E FR-A8□6-E				
FR-A800-GF	FR-A8□0-GF FR-A8□2-GF				
FR-A800-GN	FR-A8□0-GN FR-A8□2-GN				
FR-A800 Plus	FR-A8□0-CRN FR-A8□2-CRN FR-A8□0-R2R FR-A8□2-R2R				
	FR-A8□0-E-CRN FR-A8□2-E-CRN FR-A8□0-E-R2R FR-A8□2-E-R2R				
FR-F800	FR-F8□0 FR-F8□2 FR-F8□6				
FR-F800-E	FR-F8□0-E FR-F8□2-E				
FR-E800	FR-E8□0				
FR-E800-E	FR-E8□0-E				
Sensorless servo	FR-E7□0EX				
MELIPM	MD-CX522-□K(-A0)				

Series	Model name	Clock	Communication type		Connectable model
			Between CPU and serial multi-drop connection unit	Between serial multi-drop connection unit and GOT	
MELSERVO	MR-J2S-□A	×	-	-	-
	MR-J2S-□CP				
	MR-J2S-□CL				
	MR-J2M-P8A				
	MR-J2M-□DU				
	MR-J3-□A				
	MR-J3-□T				
	MR-J4-□A				
	MR-JE-□A				

*1 When in multiple CPU system configuration, use CPU function version B or later.
*2 Access via the (RS-232) in the multiple CPU system.
*3 Use a module with the upper five digits of the serial No. later than 12042.
*4 Ww and Wr devices cannot be monitored.
*5 The adapter L6ADP-R2 or L6ADP-R4 is required for the direct CPU connection (serial).
When using L6ADP-R4, use an LCPU whose upper five digits are "15102" or later.
*6 SB, SW, Ww, Wr, ER, and BM devices cannot be monitored.
*7 When monitoring AnNCPU or A2SCPU, only the following or later software version is used to write to the CPU.
• AnNCPU(S1) with link: Version L or later, AnNCPU(S1) without link: Version H or later
• A2SCPU: Version H or later
*8 When monitoring A0J2HCPU or A2CCPU, only the following or later software version is used to write to the CPU.
• A0J2HCPU (with/without link): Version E or later
• A0J2HCPU-DC24: Version B or later
• A2CCPU: Version H or later
*9 When using SV13, SV22, or SV43, use a Motion CPU with the following version of OS installed.
• SW6RN-SV13Q□: 00E or later
• SW6RN-SV22Q□: 00E or later
• SW6RN-SV43Q□: 00B or later
*10 Use main modules with the following product numbers.
• Q172CPU: Product number K******* or later
• Q173CPU: Product number J******* or later
*11 It is available by installing the real time clock function board or the EEPROM memory with the real time clock function.
*12 Only available to GS21-W-N for GS21.

Serial communication connection

The following table shows the connectable models for connecting the CPU to the serial multi-drop connection unit in the serial communication connection.

Series	Model name	Clock	Communication type		Connectable model
			Between CPU and serial multi-drop connection unit	Between serial multi-drop connection unit and GOT	
MELSEC iQ-R Series	R00CPU	○	RS-232 RS-422	RS-485	-
	R01CPU				
	R02CPU				
	R04CPU				
	R08CPU				
	R16CPU				
	R32CPU				
	R120CPU				
	R08PCPU				
	R16PCPU				
	R32PCPU				
	R120PCPU				
	R04ENCPU				
	R08ENCPU				
	R16ENCPU				
	R32ENCPU				
	R120ENCPU				
	R08PSFCPU				
	R16PSFCPU				
	R32PSFCPU				
	R120PSFCPU				
	R08SFCPU				
	R16SFCPU				
	R32SFCPU				
	R120SFCPU				
Motion CPU (MELSEC iQ-R Series)	R16MTCPU	○	RS-232 RS-422	RS-485	-
	R32MTCPU				
	R64MTCPU				
C Controller module (MELSEC iQ-R Series)	R12CCPU-V	○	RS-232 RS-422	RS-485	-
MELSECWinCPU (MELSEC iQ-R Series)	R102WCPU-W	×	RS-232 RS-422	RS-485	-
CNC C80	R16NCCPU-S1	○	RS-232 RS-422	RS-485	-
Robot controller (MELSEC iQ-R Series)	CR800-R(R16RTCPU)	○	RS-232 RS-422	RS-485	-
MELSEC iQ-F Series	FX5U	○	RS-232 RS-422	RS-485	-
	FX5UC				
	FX5UJ				
	FX5S				

Series	Model name	Clock	Communication type		Connectable model
			Between CPU and serial multi-drop connection unit	Between serial multi-drop connection unit and GOT	
MELSEC-Q (Q mode)*3	Q00JCPU	○	RS-232 RS-422	RS-485	GT27 GT25 GT23 GT21 07W GT21 05Q GT21 04R GT21 03P 04P ET/R4 GT21 03P 04P R4 GS25 GS21 *8
	Q00CPU*1				
	Q01CPU*1				
	Q02CPU*1				
	Q02HCPU*1				
	Q06HCPU*1				
	Q12HCPU*1				
	Q25HCPU*1				
	Q02PHCPU	○	-	-	-
	Q06PHCPU				
	Q12PHCPU				
	Q25PHCPU				
	Q12PRHCPU (Main base)	○	-	-	-
	Q25PRHCPU (Main base)				
	Q12PRHCPU (Extension base)				
	Q25PRHCPU (Extension base)				
	Q00UJCPU Q00UJCPU-S8	○	RS-232 RS-422	RS-485	GT27 GT25 GT23 GT21 07W GT21 05Q GT21 04R GT21 03P 04P ET/R4 GT21 03P 04P R4 GS25 GS21 *8
	Q00UCPU				
	Q01UCPU				
	Q02UCPU				
	Q03UDCPU				
	Q04UDHCPU				
	Q06UDHCPU				
	Q10UDHCPU				
	Q13UDHCPU				
	Q20UDHCPU				
	Q26UDHCPU				
	Q03UDECPU				
	Q04UDEHCPU				
	Q06UDEHCPU				
	Q10UDEHCPU				
	Q13UDEHCPU				
	Q20UDEHCPU				
	Q26UDEHCPU				
	Q50UDEHCPU				
	Q100UDEHCPU				
	Q03UDVCPU				
	Q04UDVCPU				
	Q06UDVCPU				
	Q13UDVCPU				
	Q26UDVCPU				

Series	Model name	Clock	Communication type		Connectable model
			Between CPU and serial multi-drop connection unit	Between serial multi-drop connection unit and GOT	
C Controller module (Q Series)	Q12DCCPU-V[*2]	○	RS-232	RS-485	GT27 GT25 GT23 GT21 07W GT21 05Q GT21 04R GT21 03P 04P ET/R4 GT21 03P 04P R4 GS25 GS21 *8
	Q24DHCCPU-V/VG				
	Q24DHCCPU-LS				
	Q26DHCCPU-LS	○	RS-232	RS-485	-
MELSEC-QS	QS001CPU	○	-	-	-
MELSEC-L[*3]	L02CPU	○	RS-232 RS-422	RS-485	GT27 GT25 GT23 GT21 07W GT21 05Q GT21 04R GT21 03P 04P ET/R4 GT21 03P 04P R4 GS25 GS21 *8
	L06CPU				
	L26CPU				
	L26CPU-BT				
	L02CPU-P				
	L06CPU-P				
	L26CPU-P				
	L26CPU-PBT				
	L02SCPU				
	L02SCPU-P				
MELSEC-Q (A mode)[*3]	Q02CPU-A	○	-	-	-
	Q02HCPU-A				
	Q06HCPU-A				
MELSEC-QnA (QnACPU)[*3]	Q2ACPU	○	RS-232 RS-422	RS-485	GT27 GT25 GT23 GT21 07W GT21 05Q GT21 04R GT21 03P 04P ET/R4 GT21 03P 04P R4 GS25 GS21 *8
	Q2ACPU-S1				
	Q3ACPU				
	Q4ACPU				
	Q4ARCPU	○	-	-	-
MELSEC-QnA (QnASCPU)[*3]	Q2ASCPU	○	RS-232 RS-422	RS-485	GT27 GT25 GT23 GT21 07W GT21 05Q GT21 04R GT21 03P 04P ET/R4 GT21 03P 04P R4 GS25 GS21 *8
	Q2ASCPU-S1				
	Q2ASHCPU				
	Q2ASHCPU-S1				

Series	Model name	Clock	Communication type		Connectable model
			Between CPU and serial multi-drop connection unit	Between serial multi-drop connection unit and GOT	
MELSEC-A (AnCPU)	A2UCPU	○	RS-232 RS-422	-	-
	A2UCPU-S1				
	A3UCPU				
	A4UCPU				
	A2ACPU				
	A2ACPUP21				
	A2ACPUR21				
	A2ACPU-S1				
	A2ACPUP21-S1				
	A2ACPUR21-S1				
	A3ACPU				
	A3ACPUP21				
	A3ACPUR21				
	A1NCPU				
	A1NCPUP21				
	A1NCPUR21				
	A2NCPU				
	A2NCPUP21				
	A2NCPUR21				
	A2NCPU-S1				
	A2NCPUP21-S1				
	A2NCPUR21-S1				
	A3NCPU				
	A3NCPUP21				
	A3NCPUR21				
MELSEC-A (AnSCPU)	A2USCPU	○	RS-232 RS-422	-	-
	A2USCPU-S1	○	-	-	-
	A2USHCPU-S1				
	A1SCPU				
	A1SCPUC24-R2				
	A1SHCPU				
	A2SCPU				
	A2SHCPU				
	A1SJCPU				
	A1SJCPU-S3				
	A1SJHCPU				
MELSEC-A	A0J2HCPU	×	-	-	-
	A0J2HCPUP21				
	A0J2HCPUR21				
	A0J2HCPU-DC24				
	A2CCPU	○			
	A2CCPUP21				
	A2CCPUR21				
	A2CCPUC24				
	A2CCPUC24-PRF				
	A2CJCPU-S3				
	A1FXCPU				

Series	Model name	Clock	Communication type		Connectable model
			Between CPU and serial multi-drop connection unit	Between serial multi-drop connection unit and GOT	
Motion CPU (Q Series)	Q172CPU*4*5	○	RS-232 RS-422	RS-485	GT27 GT25 GT23 GT21 07W GT21 05Q GT21 04R GT21 03P 04P ET/R4 GT21 03P 04P R4 GS25 GS21 *8
	Q173CPU*4*5				
	Q172CPUN*4*5				
	Q173CPUN*4*5				
	Q172HCPU				GT27 GT25 GT23 GT21 07W GT21 05Q GT21 04R GT21 03P 04P ET/R4 GT21 03P 04P R4 GS25 GS21 *6*8
	Q173HCPU				
	Q172DCPU				
	Q173DCPU				
	Q172DCPU-S1				
	Q173DCPU-S1				
	Q172DSCPU				
	Q173DSCPU				
	Q170MCPU				GT27 GT25 GT23 GT21 07W GT21 05Q GT21 04R GT21 03P 04P ET/R4 GT21 03P 04P R4 GS25 GS21 *8
	Q170MSCPU				
	Q170MSCPU-S1				
Motion CPU (A Series)	A273UCPU	○	RS-232 RS-422	-	-
	A273UHCPU				
	A273UHCPU-S3				
	A373UCPU				
	A373UCPU-S3				
	A171SCPU				
	A171SCPU-S3				
	A171SCPU-S3N				
Motion CPU (A Series)	A171SHCPU	○	-	-	-
	A171SHCPUN				
	A172SHCPU				
	A172SHCPUN				
	A173UHCPU				
	A173UHCPU-S1				
MELSEC-WS	WS0-CPU0	×	-	-	--
	WS0-CPU1				
MELSECNET/H remote I/O station	QJ72LP25-25	×	-	-	-
	QJ72LP25G				
	QJ72BR15				
CC-Link IE Field Network head module	LJ72GF15-T2	×	-	-	-
CC-Link IE Field Network Ethernet adapter module	NZ2GF-ETB	×	-	-	-
CNC C70	Q173NCCPU	○	-	-	-
Robot controller (Q Series)	CRnQ-700(Q172DRCPU) CR750-Q(Q172DRCPU) CR751-Q(Q172DRCPU) CR800-Q(Q172DSRCPU)	○	-	-	-

Series	Model name	Clock	Communication type		Connectable model
			Between CPU and serial multi-drop connection unit	Between serial multi-drop connection unit and GOT	
MELSEC-FX	FX0	×	-	-	-
	FX0S	×			
	FX0N				
	FX1	×			
	FX2	×*7			
	FX2C				
	FX1S	○			
	FX1N				
	FX2N				
	FX1NC				
	FX2NC	×*7			
	FX3S	○			
	FX3G				
	FX3GC				
	FX3GE				
	FX3U				
	FX3UC				
FR-A500(L)	FR-A5□0(L)	×	-	-	-
FR-F500(L)	FR-F5□0(L)				
FR-V500(L)	FR-V5□0(L)				
FR-E500	FR-E5□0(C) FR-E5□0S FR-E5□0W				
FR-S500(E)	FR-S5□0(E)(-R)(-C) FR-S5□0S(E)(-R) FR-S5□0W(E)(-R)				
FR-F500J	FR-F5□0J(F)				
FR-D700	FR-D7□0 FR-D7□0S FR-D7□0W				

Series	Model name	Clock	Communication type		Connectable model
			Between CPU and serial multi-drop connection unit	Between serial multi-drop connection unit and GOT	
FR-F700PJ	FR-F7□0PJ(F)	×	-	-	-
FR-E700	FR-E7□0 FR-E7□0S FR-E7□0W				
	FR-E7□0-NE				
FR-A700	FR-A7□0				
FR-F700	FR-F7□0				
FR-F700P	FR-F7□0P				
FR-A800	FR-A8□0 FR-A8□2 FR-A8□6				
FR-A800-E	FR-A8□0-E FR-A8□2-E FR-A8□6-E				
FR-A800-GF	FR-A8□0-GF FR-A8□2-GF				
FR-A800-GN	FR-A8□0-GN FR-A8□2-GN				
FR-A800 Plus	FR-A8□0-CRN FR-A8□2-CRN FR-A8□0-R2R FR-A8□2-R2R				
	FR-A8□0-E-CRN FR-A8□2-E-CRN FR-A8□0-E-R2R FR-A8□2-E-R2R				
FR-F800	FR-F8□0 FR-F8□2 FR-F8□6				
FR-F800-E	FR-F8□0-E FR-F8□2-E				
FR-E800	FR-E8□0				
FR-E800-E	FR-E8□0-E				
Sensorless servo	FR-E7□0EX				
MELIPM	MD-CX522-□K(-A0)				
MELSERVO	MR-J2S-□A	×	-	-	-
	MR-J2S-□CP				
	MR-J2S-□CL				
	MR-J2M-P8A				
	MR-J2M-□DU				
	MR-J3-□A				
	MR-J3-□T				
	MR-J4-□A				
	MR-JE-□A				

*1 When in multiple CPU system configuration, use CPU function version B or later.
*2 Use a module with the upper five digits of the serial No. later than 12042.
*3 Ww and Wr devices cannot be monitored.
*4 When using SV13, SV22, or SV43, use a Motion CPU with the following version of OS installed.
- SW6RN-SV13Q□: 00E or later
- SW6RN-SV22Q□: 00E or later
- SW6RN-SV43Q□: 00B or later

*5 Use main modules with the following product numbers.
- Q172CPU: Product number K******* or later
- Q173CPU: Product number J******* or later

*6 Access via the (RS-232) in the multiple CPU system.
*7 It is available by installing the real time clock function board or the EEPROM memory with the real time clock function.
*8 Only available to GS21-W-N for GS21.

[Controller Type] and [Communication driver] of GT Designer3

The following table shows the [Controller Type] and [Communication driver] of GT Designer3 for which the GOT multi-drop connection is available.

GOT type	PLC ↔ Serial multi-drop connection unit		
	Connection type	Type	Serial multi-drop connection driver
GT27 GT25 GT23 GT21 07W GT21 05Q GT21 04R GT21 03P 04P ETR4 GT21 03P 04P R4 GS25 GS21	DIRECT CPU CONNECTION (SERIAL) COMPUTER LINK CONNECTION	MELSEC-Q/QS, Q17nD/M/NC/DR/DSR, CRnD-700	Serial (MELSEC)
		MELSEC-QnA, MELDAS C6*	
		MELSEC-L	
	DIRECT CPU CONNECTION (SERIAL)	MELSEC-A	MELSEC-A
		MELSEC-FX	MELSEC-FX

20.3 System Configuration

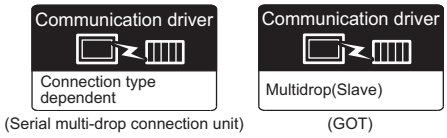

When the RS-485 terminal block conversion unit is not used

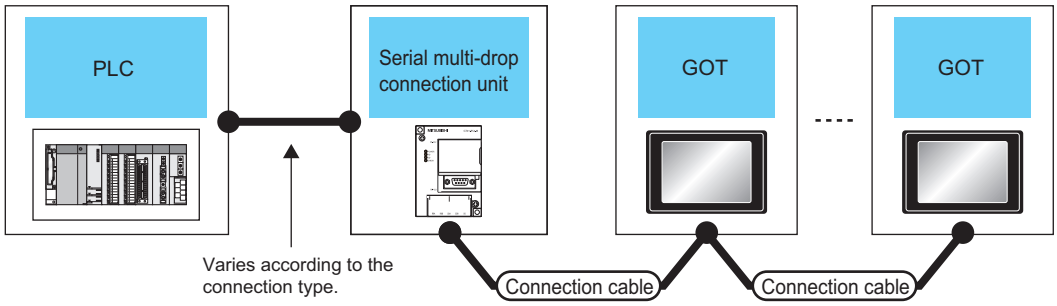

PLC	Serial multi-drop connection unit		Connection cable	GOT		Max. distance	Number of connectable equipment
	Model	Communication type	Cable model	Option device	Model		
For the system configuration between the serial multi-drop connection unit and PLC, refer to the following. ☞ Page 375 DIRECT CPU CONNECTION (SERIAL) ☞ Page 439 SERIAL COMMUNICATION CONNECTION	GT01-RS4-M	RS-485	User preparing Page 1055 RS-485 connection diagram 1)	- (Built into GOT)	GT27 GT25 GT23 GS25	500m*2	16 GOTs for a serial multi-drop connection unit*3
				GT15-RS4-9S	GT27 GT25 *4*5		
			User preparing Page 1056 RS-485 connection diagram 2)	GT15-RS4-TE	GT27 GT25 *4*5		
			User preparing Page 1057 RS-485 connection diagram 3)	GT10-9PT5S*1	GT25 GT21 05Q *6		
				- (Built into GOT)	GT21 07W GT21 05Q GT21 04R GT21 03P 04P EURA GT21 03P 04P R4 GS21 *9		
				GT10-C02H-9SC	GT21 04R GT21 03P 04P R4		
				GT14-RS2T4-9P*7	GT25 *8		

*1 Connect it to the RS-422/485 interface (built into GOT).
*2 The maximum distance from the PLC to the terminal GOT.
*3 When the number of connected GOTs is increased, the response performance decreases.
*4 Not available to GT25-W.
*5 Not available to GT2505-V.
*6 GT2505-V, GT2105-Q only supported.
*7 Connect it to the RS-232 interface (built into GOT).
*8 Only available to GT2505-V.
*9 Only available to GS21-W-N for GS21.

When the RS-485 terminal block conversion unit is used

When an RS-485 terminal block conversion unit is used

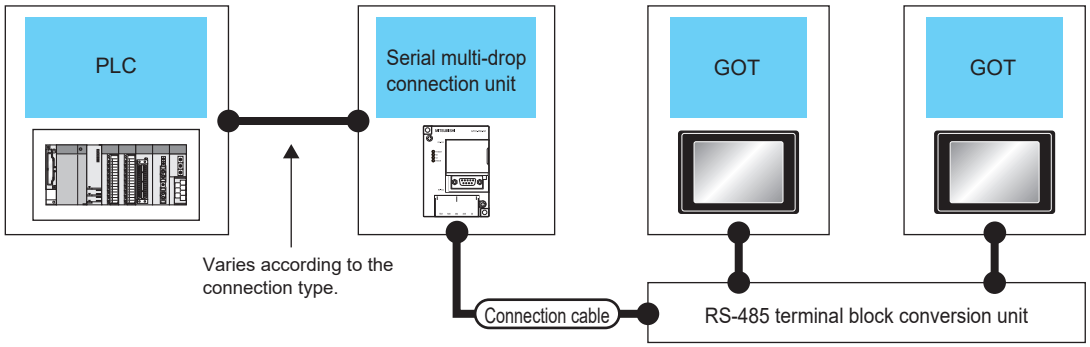

PLC	Serial multi-drop connection unit		Connection cable	GOT		Max. distance	Number of connectable equipment
	Model	Communication type	Cable model	Option device*3	Model		
For the system configuration between the serial multi-drop connection unit and PLC, refer to the following. ☞ Page 375 DIRECT CPU CONNECTION (SERIAL) ☞ Page 439 SERIAL COMMUNICATION CONNECTION	GT01-RS4-M	RS-485	User preparing Page 1058 RS-485 connection diagram 4)	RS-485 terminal block conversion unit • FA-LTBGT2R4CBL05 • FA-LTBGT2R4CBL10 • FA-LTBGT2R4CBL20	GT27 GT25 GS25	500m*1	Two GOTs for a serial multi-drop connection unit *2

*1 The maximum distance from the PLC to the terminal GOT.
*2 When the number of connected GOTs is increased, the response performance decreases.
*3 Not available to GT2505-V.

When multiple RS-485 terminal block conversion units are used

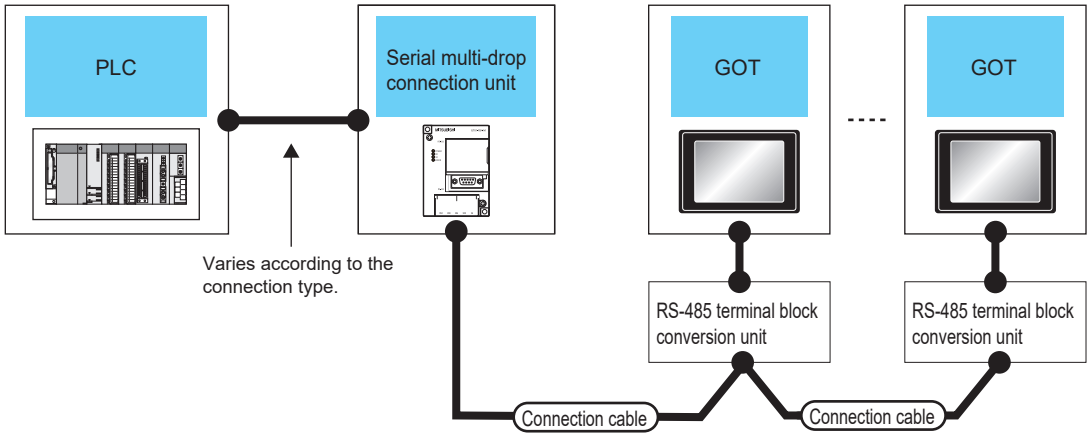

PLC	Serial multi-drop connection unit		Connection cable	GOT		Max. distance	Number of connectable equipment
	Model	Communication type	Cable model	Option device*3	Model		
For the system configuration between the serial multi-drop connection unit and PLC, refer to the following. ☞ Page 375 DIRECT CPU CONNECTION (SERIAL) ☞ Page 439 SERIAL COMMUNICATION CONNECTION	GT01-RS4-M	RS-485	User preparing Page 1058 RS-485 connection diagram 5)	RS-485 terminal block conversion unit • FA-LTBGT2R4CBL05 • FA-LTBGT2R4CBL10 • FA-LTBGT2R4CBL20	GT27 GT25 GS25	500m*1	16 GOTs for a serial multi-drop connection unit *2

*1 The maximum distance from the PLC to the terminal GOT.
*2 When the number of connected GOTs is increased, the response performance decreases.
*3 Not available to GT2505-V.

20.4 Connection Diagram

The following diagram shows the cable connection between the serial multi-drop connection unit and the GOT.

RS-485 cable

Connection diagram

■RS-485 connection diagram 1)

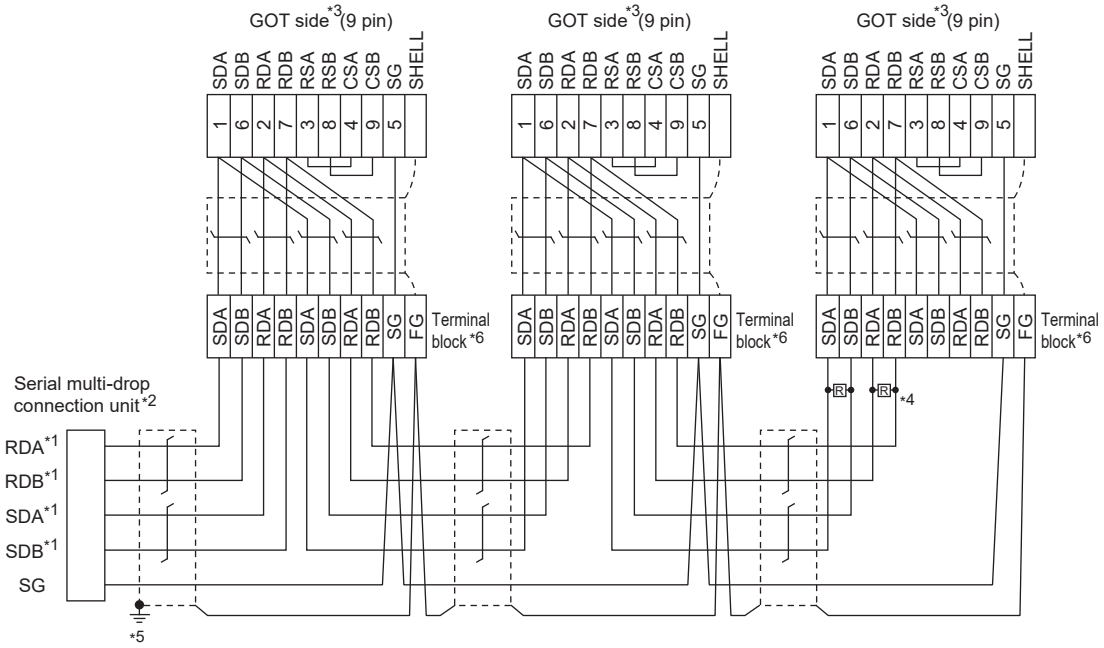

*1 Use the twisted pair cable for SDA/SDB and RDA/RDB.

*2 Set the terminating resistor selector to "330Ω".

*3 For GT27, GT25 (except GT2505-V), GT23, or GS25, set the terminating resistor to "Disable".
In the case of GT2505-V, set the terminating resistor setting to 330 Ω.
☞ Page 68 Terminating resistors of GOT

*4 For GT27, GT25 (except GT2505-V), GT23, or GS25 positioned at the end in the system configuration, connect a 330 Ω terminating resistor.

*5 Make sure to ground the shield of the cable with a ground resistance of 100 Ωor less.

*6 For the cable for converting D-sub9 pin connector to terminal block, refer to the following.
☞ Page 1059 Precautions when preparing a cable

■RS-485 connection diagram 2)

(For 1 pair wiring)

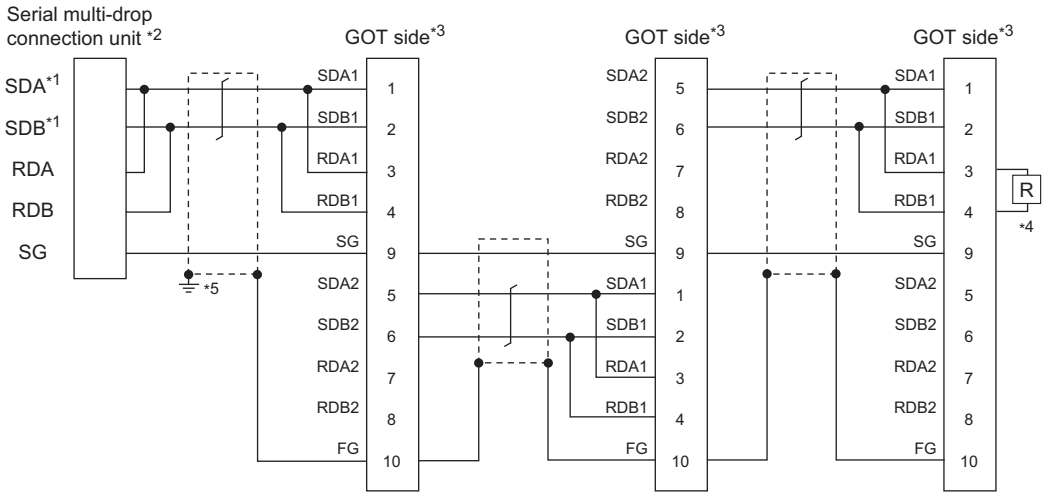

*1 Use the twisted pair cable for SDA/SDB.
*2 Set the terminating resistor selector to "110Ω".
*3 Set the terminating resistor setting switch of the GOT main unit to "Disable".
☞ Page 68 Terminating resistors of GOT
*4 Connect a 110Ω terminating resistor to the GOT to be a terminal.
*5 Make sure to ground a cable shield line by applying Class D Grounding.

■RS-485 connection diagram 2)

(For 2 pair wiring)

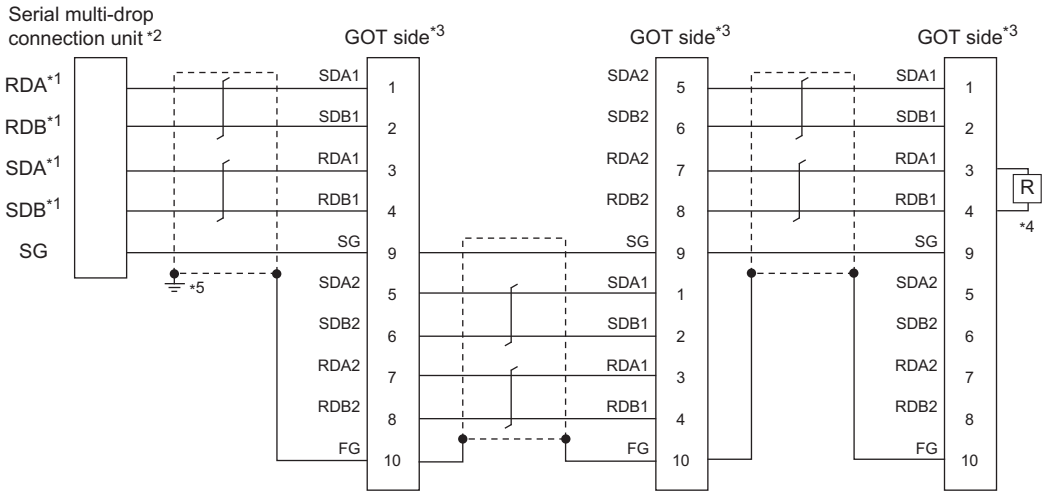

*1 Use the twisted pair cable for SDA/SDB, RDA/RDB.
*2 Set the terminating resistor selector to "330Ω".
*3 Set the terminating resistor setting switch of the GOT main unit to "Disable".
☞ Page 68 Terminating resistors of GOT
*4 Connect a 330Ω terminating resistor to the GOT to be a terminal.
*5 Make sure to ground a cable shield line by applying Class D Grounding.

■RS-485 connection diagram 3)

(For 1 pair wiring)

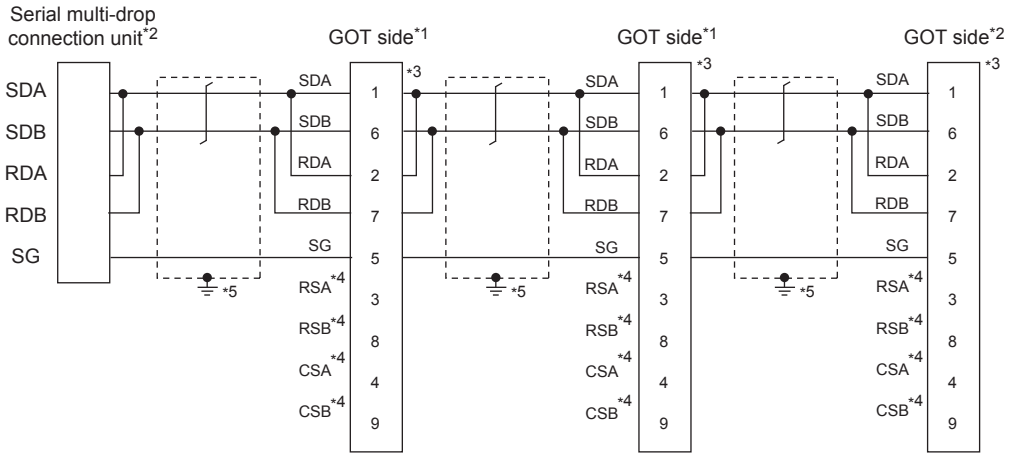

*1 Set the terminating resistor selector to "OPEN".

*2 Set the terminating resistor selector to "110Ω".

☞ Page 68 Terminating resistors of GOT

*3 It is a connector pin number of GT10-C02H-9SC.

*4 The signals RSA, RSB, CSA, and CSB are not provided for GT2104-PMBD, GT2103-PMBD.

*5 Make sure to ground a cable shield line by applying Class D Grounding (100Ω or less).

■RS-485 connection diagram 3)

(For 2 pair wiring)

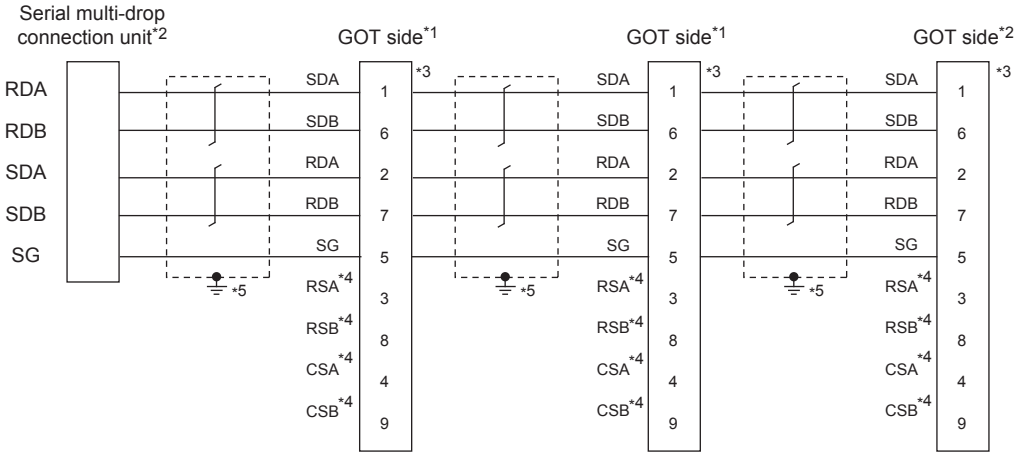

*1 Set the terminating resistor selector to "OPEN".

*2 Set the terminating resistor selector to "330Ω".

☞ Page 68 Terminating resistors of GOT

*3 It is a connector pin number of GT10-C02H-9SC.

*4 The signals RSA, RSB, CSA, and CSB are not provided for GT2104-PMBD, GT2103-PMBD.

*5 Make sure to ground a cable shield line by applying Class D Grounding (100Ω or less).

■RS-485 connection diagram 4)

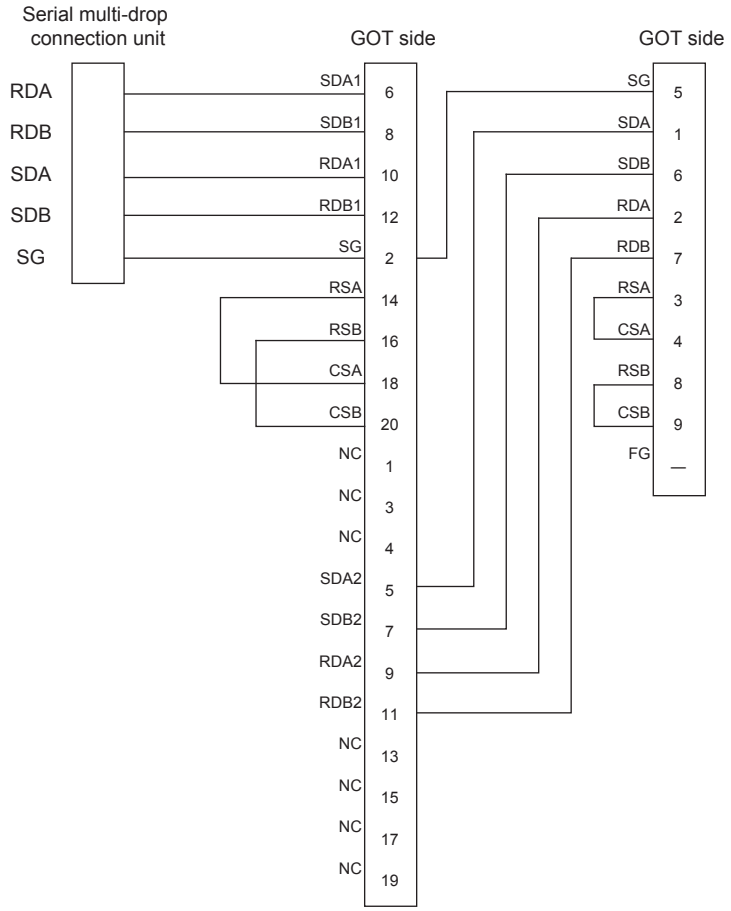

■RS-485 connection diagram 5)

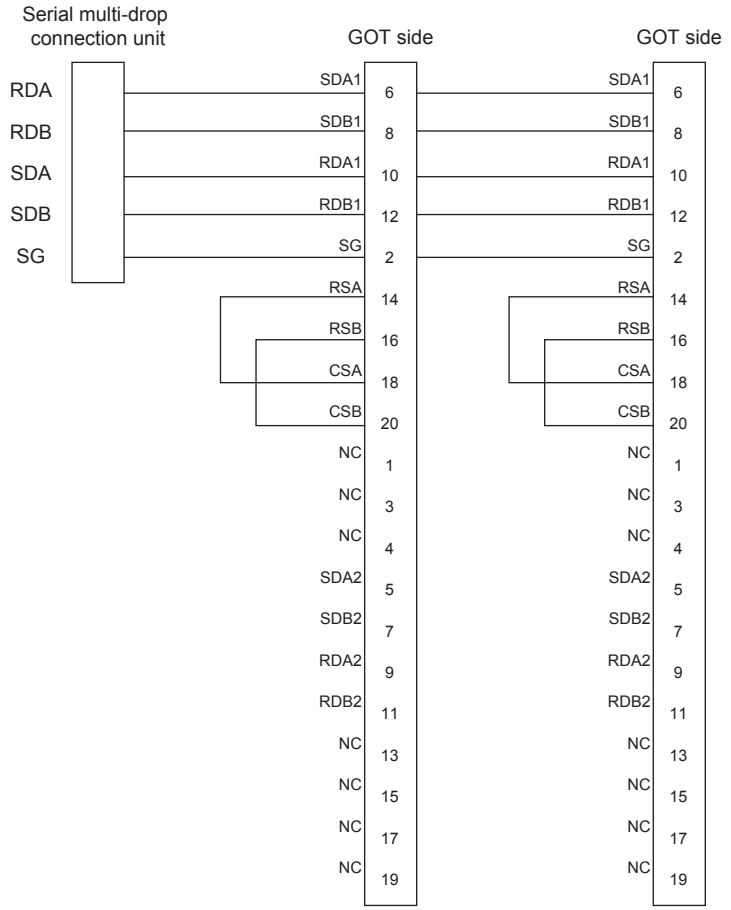

Precautions when preparing a cable

■Cable

Use a shielded twisted pair cable of 0.3mm2 or more as a cable for GOT multi-drop connection.The following shows recommended model names and manufacturers of the cable to be used.

Manufacturer	Model	Remark
Mitsubishi Electric Cable Industries,Ltd	SPEV(SB)-0.5-2P	Two-pair cable of 0.5mm2
Showa Electric Wire & Cable Co.,Ltd	KMPEV-SB CWS-178 0.5SQ × 2P	Two-pair cable of 0.5mm2
Sumitomo Electric Industries.,Ltd	DPEV SB 0.3 × 3P	Three-pair cable of 0.3mm2
	DPEV SB 0.5 × 3P	Three-pair cable of 0.5mm2
The Furukawa Electric Co.,Ltd	D-KPEV-SB 0.5 × 3P	Three-pair cable of 0.5mm2
Fujikura Ltd.	IPEV-SB 2P × 0.3 mm2	Two-pair cable of 0.3mm2
	IPEV-SB 2P × 0.5 mm2	Two-pair cable of 0.5mm2

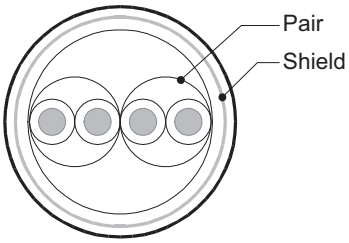

Two-pair cable structural drawing example

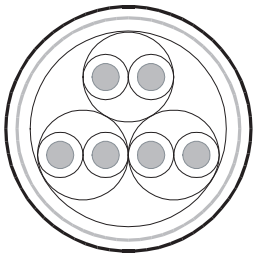

Three-pair cable structural drawing example

■Cable for converting D-sub9 pin connector to terminal block

Create by yourself, referring to the following connection diagram.

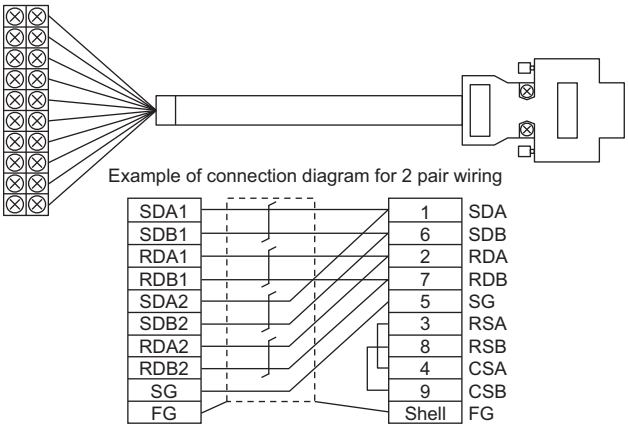

Make sure to connect the wiring branched on the GOT side connector.

Use a shielded twisted pair cable of 0.2mm^2 or more.

Use an applicable cable to D-sub connector.

Wiring should be the shortest distance.

■GOT side connector

For the GOT side connector, refer to the following.

☞ Page 64 GOT connector specifications

Connecting terminating resistors

When connecting a serial multi-drop connection unit to the GOT, a terminating resistor must be connected to the GOT.

■For GT27, GT25 (except GT2505-V), GT23, GS25

Set the terminating resistor setting switch of the GOT main unit to disable.

■For GT2505-V, GT21, GS21-W-N

Set the terminating resistor selector.

For the procedure to set the terminating resistor, refer to the following.

☞ Page 68 Terminating resistors of GOT

20.5 GOT Side Settings

Setting communication interface (Controller Setting)

Set the channel of connecting equipment.

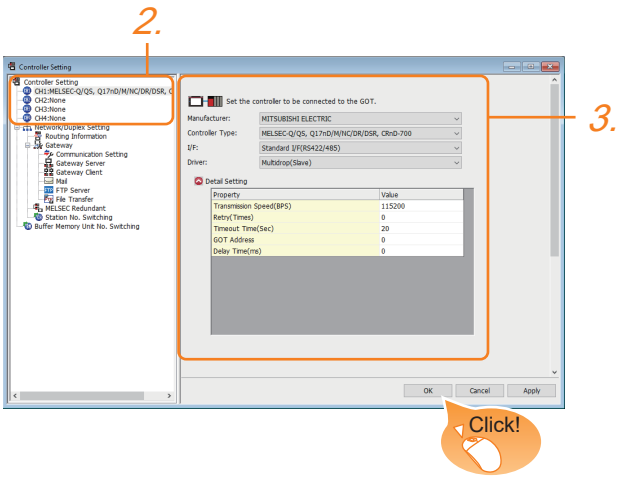

1. Select [Common] → [Controller Setting] from the menu.

2. In the [Controller Setting] window, select the channel No. to be used from the list menu.

3. Set the following items.

- [Manufacturer]: Configure the setting according to the controller.
- [Controller Type]: Configure the setting according to the controller.
- [I/F]: Interface to be used
- [Driver]: [Multidrop(Slave)]
- [Detail Setting]: Configure the settings according to the usage environment.

☞ Page 1062 Communication detail settings

4. When you have completed the settings, click the [OK] button.

Point

The settings of connecting equipment can be confirmed in [I/F Communication Setting].
For details, refer to the following.
☞ Page 54 I/F communication setting

Communication detail settings

Make the settings according to the usage environment.

Property	Value
Transmission Speed(BPS)	115200
Retry(Times)	0
Timeout Time(Sec)	20
GOT Address	0
Delay Time(ms)	0

Item	Description	Range
Transmission Speed	Set this item when change the transmission speed used for communication with the connected equipment. (Default: 115200bps)	4800bps, 9600bps, 19200bps, 38400bps, 57600bps, 115200bps
Retry	Set the number of retries to be performed when a communication timeout occurs. When receiving no response after retries, the communication times out. (Default: 0time)	0 to 5times
Timeout Time	Set the time period for a communication to time out. (Default: 3sec)	1 to 30sec
GOT Address	Specify the station number of the host station in the system configuration. (Default: 0)	0 to 15
Delay Time	Set this item to adjust the transmission timing of the communication request from the GOT. (Default: 0ms)	0 to 300 ms

Point

• Communication interface setting by Utility

The communication interface setting can be changed on the Utility's [Communication Settings] after writing [Controller Setting] of project data.

For details on the Utility, refer to the following manual.

📖GOT2000 Series User's Manual (Utility)

• Precedence in communication settings

When settings are made by GT Designer3 or the Utility, the latest setting is effective.

20.6 Settings of Serial Multi-Drop Connection Unit

Write the OS

Install the standard monitor OS and communication driver according to the desired connection type to the serial multi-drop connection unit using GT Designer3 (GOT1000) (Version1.12N or later).

For the OS writing methods, refer to the following manual.

GT Designer3 Version1 Screen design manual

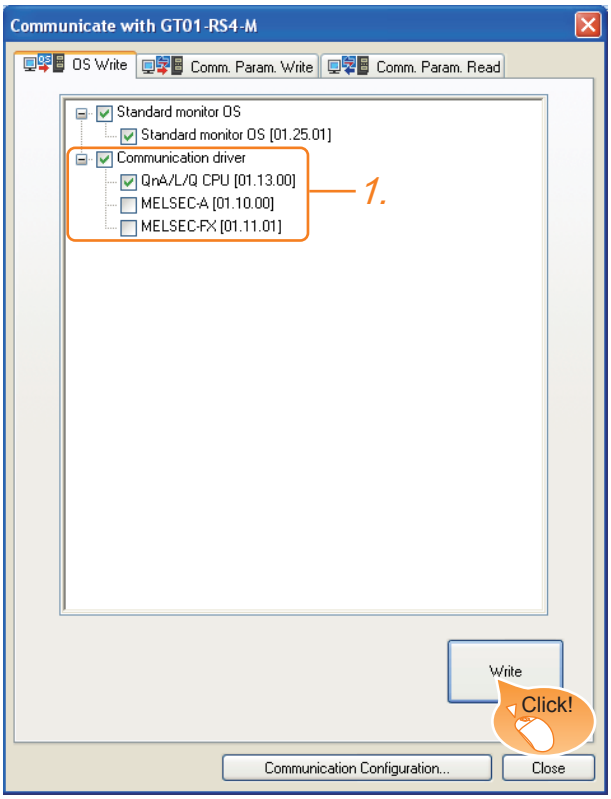

1. Check-mark a communication driver according to the desired connection type and click the [Write] button.

Setting communication interface (Controller Setting)

Make the serial multi-drop connection unit interface setting on [Communication with GT01-RS4-M] of GT Designer 3.
For the communication interface driver, set the same communication driver as the serial multi-drop connection.
For details on [Communication with GT01-RS4-M] of GT Designer3, refer to the manuals.
📖GT Designer3 Version1 Screen design manual

Controller Setting

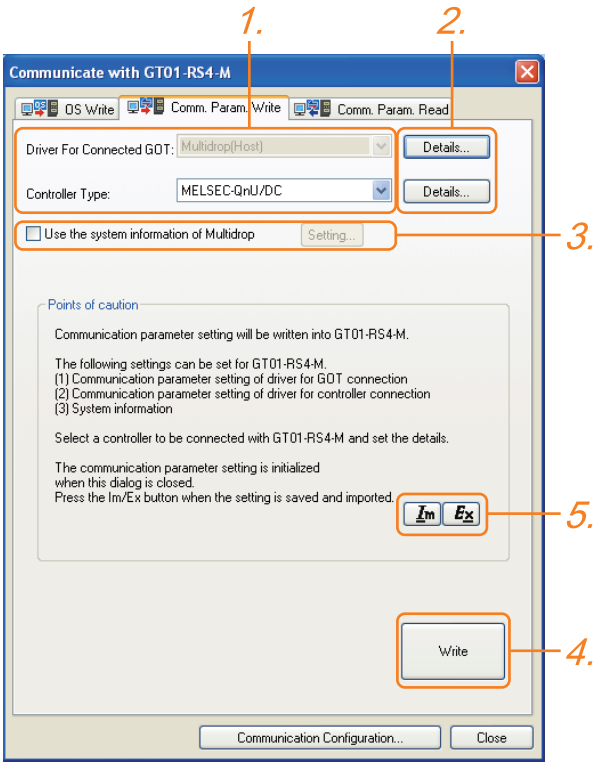

1. Set [Controller Type] as follows.

- PLC used

[Driver For Connected GOT] is fixed to the following selection.

- Multi-drop(Host)

2. Configure the detailed settings for the driver.

☞ Page 1068 Communication detail settings

3. Set [Use the system information of Multidrop] as necessary.

☞ Page 1065 Setting the multi-drop system information function

4. Click the [Write] button when settings are completed.

5. If the [Communication with GT01-RS4-M] dialog box is closed, communication setting contents for GT01-RS4-M does not remain.

- To maintain the communication setting contents, click Ex (export).

☞ Page 1067 Exporting/Importing the communication setting contents

- To use communication setting contents which are saved previously, click Im (import).

☞ Page 1067 Exporting/Importing the communication setting contents

Setting the multi-drop system information function

When checking the connection status of each GOT which is connected to GT01-RS4-M on the PLC side, set the multi-drop system information function.

The GOT connection status is stored in the PLC side word device.

■Setting on the PLC side word device

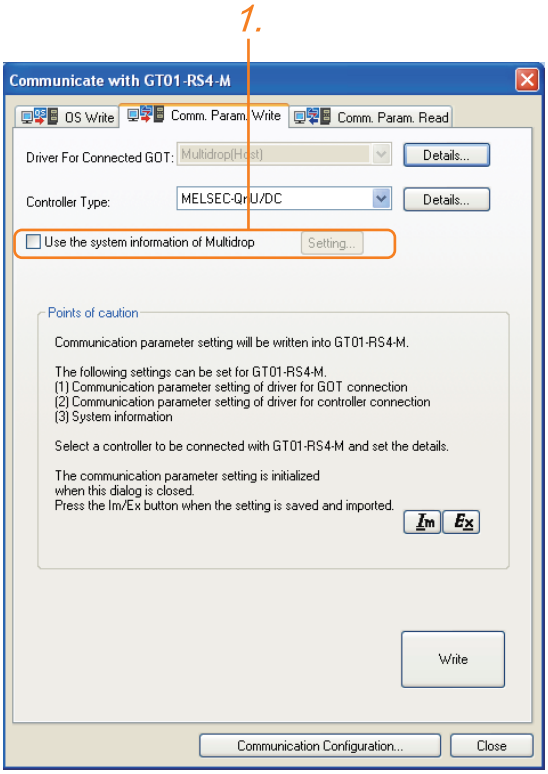

1. Select [Use the system information of Multidrop] and click the [Set] button. The following dialog window is displayed.

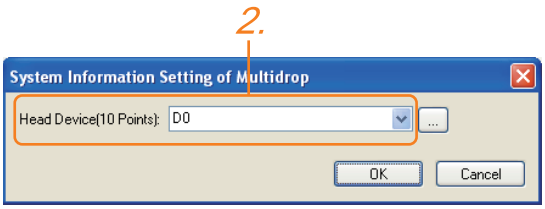

2. Set the PLC side word device to [Head Device (10 Points)]. In this example, "D0" is set.

■Assignment contents of the PLC side word device

The following table shows the device assignment contents when setting [Head Device (10 Points)] to "D0".

Device	Description
D0 (Head device+0)	Control signal 1-1
D1(Head device+1)	Station information notification signal
D2(Head device+2)	(Reserve)
D3(Head device+3)	(Reserve)
D4(Head device+4)	(Reserve)
D5(Head device+5)	Slave station control signal
D6(Head device+6)	(Reserve)
D7(Head device+7)	(Reserve)
D8(Head device+8)	(Reserve)
D9(Head device+9)	(Reserve)

■Details on the word device assignment contents

• Control signal 1-1

Bit position	Description
bit0	10 second cycle flicker signal
bit1 to 15	(Reserve)

< 10 second cycle flicker signal *1 >

By the repetition of turning ON/OFF every 5 seconds, the connection between GT01-RS4-M and the PLC can be confirmed on the PLC side.

When no repetition of this ON/OFF is observed, GT01-RS4-M is not connected to the PLC.

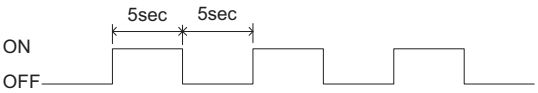

*1 When writing or clearing data on the program area from the personal computer to the PLC using FA transparent function, flicker of the signal as shown above may be temporarily stopped.

• Station information notification signal *1

This signal notifies the status of the slave station (GOT) which is connected to the master station (GT01-RS4-M). Only the bit corresponding to the number of connected slave station (GOT) is turned ON and other bits are turned OFF.

bit15	bit14	.....	bit2	bit1	bit0
Station No. 15	Station No. 14	.....	Station No. 2	Station No. 1	Station No. 0

• 1: Connected

• 0: Unconnected (Including communication error status)

*1 When the communication between GT01-RS4-M and the PLC becomes faulty, the station information notification signal is not updated.

• Slave station control signal

This signal controls slave stations which are not updated by the master station.

Usually, the master station accesses all stations (up to 16 stations). In addition, if stations are temporarily in communication error due to a power disconnection or screen data transfer during the steady operation, the automatic recovery of the station is executed for one station per ten seconds. Therefore, the automatic recovery may take maximum 2 minutes and 30 seconds.

Using this control signal, the number of slave stations to be monitored by the master station can be reduced to the actual number of slave stations to be used by a user. This makes the automatic recovery processing smooth. If an error occurs in only one station, the time for the station to recover automatically can be reduced within 10 seconds.

<table>
<tr><th>Device value</th><th>Action</th></tr>
<tr><td>0</td><td>The master station accesses all the slave stations (station 0 to 15). When the multi-drop system information is not used, the operation is the same.</td></tr>
<tr><td>Other than 0</td><td>Turning on the bit corresponding to a station No. disconnects the specified slave station from the master station.
<table>
<tr><th>bit15</th><th>bit14</th><th>.....</th><th>bit2</th><th>bit1</th><th>bit0</th></tr>
<tr><td>Station No. 15</td><td>Station No. 14</td><td>.....</td><td>Station No. 2</td><td>Station No. 1</td><td>Station No. 0</td></tr>
</table>
1...Connected
0...Unconnected</td></tr>
</table>

When the bits are off and the master station and the slave stations are in communication, the communication with the corresponding slave stations is disconnected if the above corresponding bits are turned on.

Exporting/Importing the communication setting contents

■ Ex Export

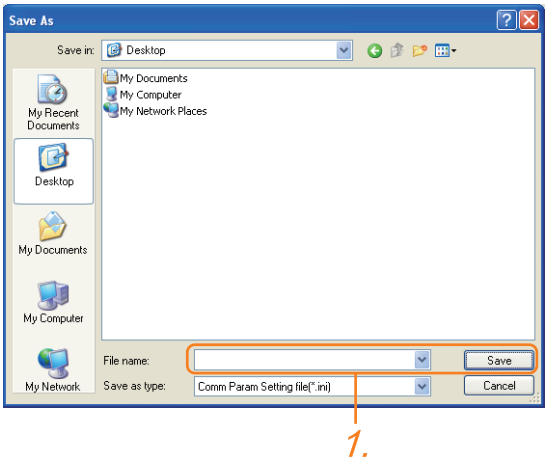

1. After determining the storage location as necessary, name the file and save it.

The file format is [*.ini] (fixed).

■ Im Import

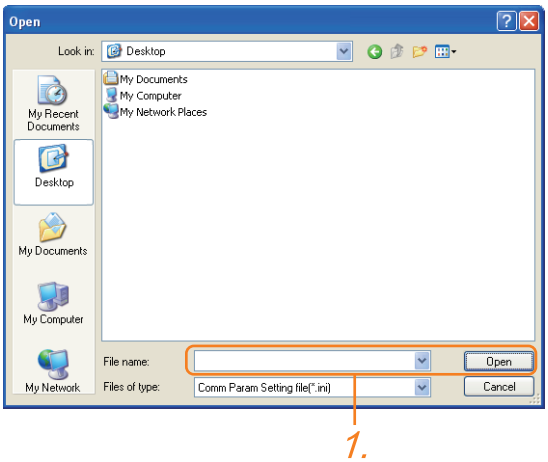

1. Enter the name of the file previously saved and open the file.

The file format is [*.ini] (fixed).

Communication detail settings

Make the settings according to the usage environment.

■For the connection with GOT

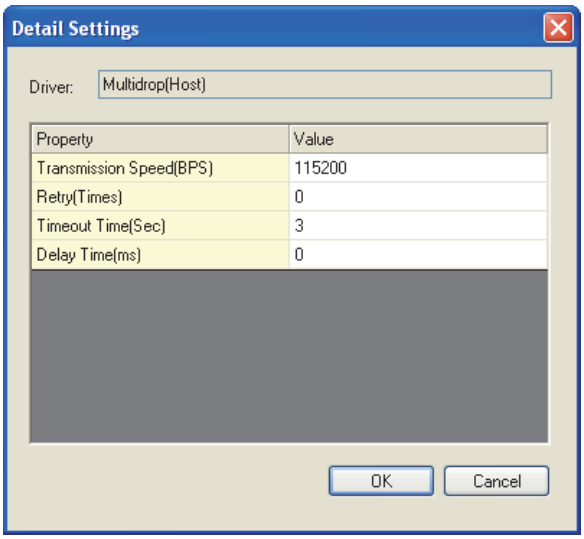

Item	Description	Range
Transmission Speed	Set this item when change the transmission speed used for communication with the connected equipment. (Default: 115200bps)	4800bps, 9600bps, 19200bps, 38400bps, 57600bps, 115200bps
Retry	Set the number of retries to be performed when a communication timeout occurs. When receiving no response after retries, the communication times out. (Default: 0time)	0 to 5times
Timeout Time	Set the time period for a communication to time out. (Default: 3sec)	1 to 30sec
Delay Time	Set this item to adjust the transmission timing of the communication request from the GOT. (Default: 0ms)	0 to 300 ms

■For the connected equipment

Set the communication detail settings of the driver for controllers according to the connection type.

☞ Refer to each chapter.

Setting switches

Set the switches according to the connection type.

Point

Serial multi-drop connection unit

For details on the serial multi-drop connection unit, refer to the following manual.

Serial Multi-Drop Connection Unit User's Manual

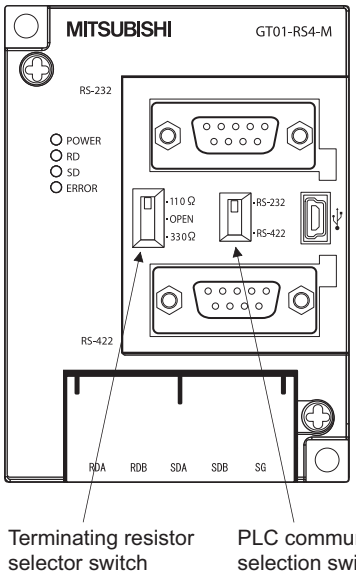

20.7 Precautions

Connecting GOT2000 in multi-drop connection

■Installing standard monitor OS and communication driver to the serial multi-drop connection unit

When connecting GOT2000 in multi-drop connection, the standard monitor OS and communication driver must be installed to the GOT from GT Designer3 (GOT1000) (Version 1.12N or later). The standard monitor OS or communication driver cannot be installed from GT Designer3 (GOT2000).

■Device specification

Network No. and station No. are not supported.

Station number setting on GOT

Set each station number so that no station number overlaps.When the station No. is duplicated, the GOT whose station No. is duplicated cannot be monitored normally.

The station number can be set without regard to the cable connection order.There is no problem even if station numbers are not consecutive.

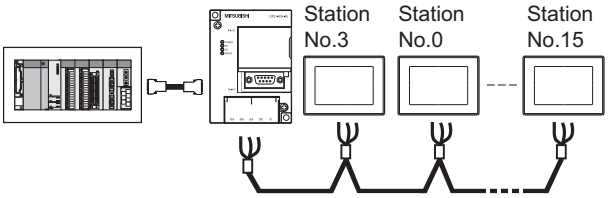

The example of a Station No. setting

Extended function of GOT

The extended functions of GOT shown below are not available.

System monitor, Device monitor, Ladder monitor, A list editor, FX list editor, Intelligent unit monitor, Network monitor, Q motion monitor, Servo amplifier monitor, CNC monitor, Backup/restore, CNC data I/O, SFC monitor, Ladder editor, Log viewer, MELSEC-L troubleshoot, Motion SFC, motion program (SV43) editor, Motion program (SV43) I/O

System alarm

The alarms of the serial multi-drop connection unit are displayed on the system alarm.The alarms of the connected PLC are not displayed.

Activating the serial multi-drop connection unit

The master module detects a slave GOT, which is connected, at the startup.It may take time to detect again the slave station which is not detected at this point.Activate the master module in the condition that a communication can be made after the startup of the slave GOT.

Using the multi-drop connection in the multi-channel configuration

If a communication timeout error occurs when using the multi-drop connection in the multi-channel configuration, set the send delay time to the serial multi-drop connection unit side.

☞ Page 1068 Communication detail settings

Device update cycle

- When the number of connected slave GOTs and the device points of each GOT increase, the device update cycle on the screen may get slower. In such a case, it is recommended to reduce the device points of each GOT. (Please consider 250 points as a guide of 1 GOT, and 750 points as a guide of the total points.) In addition, when a timeout error occurs, make the timeout time longer in the communication settings of the slave GOT.
- When the device number is set randomly, the device update cycle becomes slower compared to the case that the device number is set consecutively.Therefore, it is recommended to set the device number consecutively.
- Depending on the device points or combination, it may take time to switch the screen.At this time, the device update cycle of other slave station is also affected.

FA transparent function

FA transparent function is available for each GOT in the GOT multi-drop connection system.

■Standard monitor OS installation, Writing Communication driver

When using FA transparent function in GOT multi-drop connection, the writing of the standard monitor OS and communication driver to the GOT from GT Designer3 (GOT1000) (Version 1.18U or later), as well as the writing of the standard monitor OS and communication driver to the serial multi-drop connection unit are required.

■Number of personal computers

Only one personal computer can be connected to the multi-drop connection system.

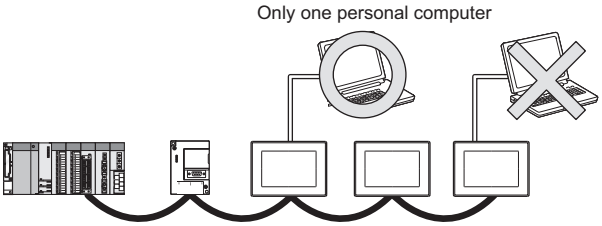

■Monitor speed of GOT

The monitoring performance slows down according to the number of monitoring GOTs. While using FA transparent function, the monitoring performance of the whole multi-drop system decreases. As a result, timeout error may occur in GOTs in the system.

Specifying a CPU number or module number with a device

In the GOT multi-drop connection, specifying a CPU number or module number with a device is not available.

8-bit and 64-bit devices

The GOT multi-drop connection does not support 8-bit and 64-bit devices.

When the GOT multi-drop connection is established with 64-bit devices, the following alarms occur.

- At writing data: System alarm 315
- At reading data: System alarm 322

8-bit devices can be set only to the GOT internal devices (GB). When 8-bit devices are set to the GB devices, no alarm occurs in the GOT multi-drop connection.

Mixture of GOT2000 series and GOT1000 series

The GOT multi-drop connection allows mixture of GOT2000 series and GOT1000 series.

MEMO

21 MULTIPLE-GT21 CONNECTION FUNCTION

- Page 1073 Connectable Model List
- Page 1074 System Configuration
- Page 1080 Connection Diagram
- Page 1085 GOT Side Settings
- Page 1092 Precautions

21.1 Connectable Model List

For details of connectable models, refer to the following.

☞ Page 375 DIRECT CPU CONNECTION (SERIAL)

☞ Page 439 SERIAL COMMUNICATION CONNECTION

21.2 System Configuration

Connection to PLC via RS-232 interface

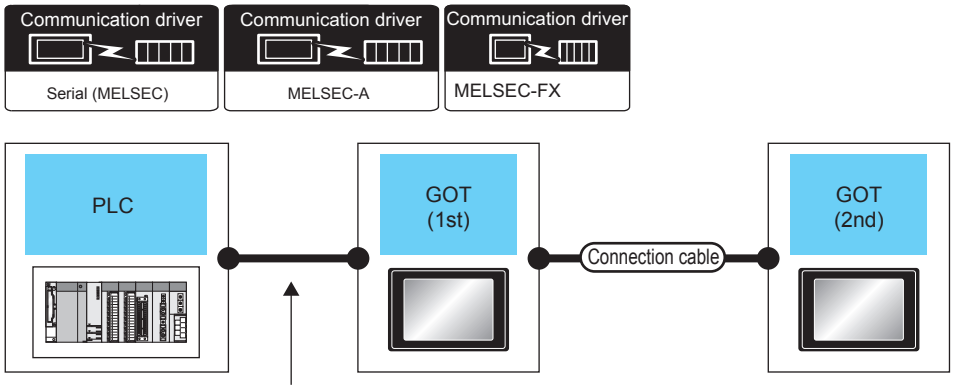

PLC		GOT (1st)			Connection cable			GOT (2nd)		Number of connectable equipment
Connection type	Communication type	Option device	Model	Option device	Communication type	Cable model	Max. distance	Option device	Model	
For the system configuration between a got and A plc, refer to the following. ☞ Page 375 DIRECT CPU CONNECTION (SERIAL) ☞ Page 439 SERIAL COMMUNICATION CONNECTION*1	RS-232	- (Built into GOT)	GT21 07W, GT21 05Q, GS21	-	RS-422	User preparing Page 1082 RS-422 connection diagram 1)	30m	- (Built into GOT)	GT21 07W, GT21 05Q, GS21	2 GOTs for one serial port *5
						User preparing Page 1083 RS-422 connection diagram 4)	30m	- (Built into GOT)	GT21 04R, GT21 03P 04P R4	
						User preparing Page 1082 RS-422 connection diagram 1)	30m	GT10-C02H-9SC		
						User preparing Page 1083 RS-422 connection diagram 6)	30m	- (Built into GOT)	GT21 03P 04P ET/R4	
		- (Built into GOT)	GT21 04R	-	RS-422	User preparing Page 1083 RS-422 connection diagram 5)	30m	- (Built into GOT)	GT21 07W, GT21 05Q, GS21	
				GT10-C02H-9SC		User preparing Page 1082 RS-422 connection diagram 1)	30m			
				-		User preparing Page 1082 RS-422 connection diagram 2)	30m	- (Built into GOT)	GT21 04R, GT21 03P 04P R4	
				GT10-C02H-9SC		User preparing Page 1082 RS-422 connection diagram 1)	30m	GT10-C02H-9SC		
				-		User preparing Page 1082 RS-422 connection diagram 3)	30m	- (Built into GOT)	GT21 03P 04P ET/R4 *6	

PLC		GOT (1st)			Connection cable			GOT (2nd)		Number of connectable equipment
Connection type	Communication type	Option device	Model	Option device	Communication type	Cable model	Max. distance	Option device	Model	
For the system configuration between a got and A plc, refer to the following. ☞ Page 375 DIRECT CPU CONNECTION (SERIAL) ☞ Page 439 SERIAL COMMUNICATION CONNECTION[*1]	RS-232	GT10-C02H-6PT9P[*4]	GT21 03P 04P R4	-	RS-422	User preparing Page 1083 RS-422 connection diagram 5)	30m	- (Built into GOT)	GT21 07W GT21 05Q GS21	2 GOTs for one serial port [*5]
				GT10-C02H-9SC		User preparing Page 1082 RS-422 connection diagram 1)	30m			
				-		User preparing Page 1082 RS-422 connection diagram 2)	30m	- (Built into GOT)	GT21 04R GT21 03P 04P R4	
				GT10-C02H-9SC		User preparing Page 1082 RS-422 connection diagram 1)	30m	GT10-C02H-9SC		
				-		User preparing Page 1082 RS-422 connection diagram 3)	30m	- (Built into GOT)	GT21 03P 04P ET/R4 [*6]	
	RS-232	- (Built into GOT)	GT21 03P 04P R2	-	RS-232	GT10-C30R2-6P	3m	- (Built into GOT)	GT21 07W GT21 05Q GS21	
				GT10-C02H-6PT9P[*4]		GT01-C30R2-9S(3m) or User preparing Page 1080 RS-232 connection diagram 1)	15m			
	RS-232	- (Built into GOT)	GT21 03P 04P R2	-	RS-232	GT10-C30R2-6P(3m)[*2]	3m	- (Built into GOT)	GT21 04R GT21 03P 04P R2	
				GT10-C02H-6PT9P[*4]		User preparing Page 1080 RS-232 connection diagram 3)	15m			
				GT10-C02H-6PT9P[*4]		GT01-C30R2-9S(3m) or User preparing Page 1080 RS-232 connection diagram 1)	15m	GT10-C02H-6PT9P[*4]	GT21 03P 04P R4 GT21 03P 04P R2	
				GT10-C02H-6PT9P[*4]		GT10-C30R2-6P	3m	- (Built into GOT)		
				-		GT10-C30R2-6P	3m	GT10-C02H-6PT9P[*4]		

PLC		GOT (1st)			Connection cable			GOT (2nd)		Number of connectable equipment
Connection type	Communication type	Option device	Model	Option device	Communication type	Cable model	Max. distance	Option device	Model	
For the system configuration between a got and A plc, refer to the following. ☞ Page 375 DIRECT CPU CONNECTION (SERIAL) ☞ Page 439 SERIAL COMMUNICATION CONNECTION*1	RS-232	GT10-C02H-6PT9P*4	GT21 03P 04P R2	-	RS-232	User preparing Page 1081 RS-232 connection diagram 6)	15m	- (Built into GOT)	GT21 07W GT21 05Q GS21	2 GOTs for one serial port *5
						User preparing Page 1081 RS-232 connection diagram 4)	15m	- (Built into GOT)	GT21 04R GT21 03P 04P R2	
						GT10-C30R2-6P(3m)*3	3m	- (Built into GOT)	GT21 03P 04P R4 GT21 03P 04P R2	
						User preparing Page 1081 RS-232 connection diagram 6)	15m	GT10-C02H-6PT9P*4		

*1 When connected to the Serial communication, the multiple connection function supports only RCPU, QCPU (Q mode), LCPU.
*2 For the connection to GOT, refer to the connection diagram.
☞ Page 1080 RS-232 connection diagram 2)
*3 For the connection to GOT, refer to the connection diagram.
☞ Page 1081 RS-232 connection diagram 5)
*4 When a GT10-C02H-6PT9P unit of the sub version A or B is used, do not ground the case of the D-sub (9-pin) connector.
*5 In the case of a serial communication module with two serial ports, four GOTs (two GOTs for each port) can be connected.
*6 GT21 03P 04P ET/R4 is not support the ACPU connection.

Connection to PLC via RS-422 interface

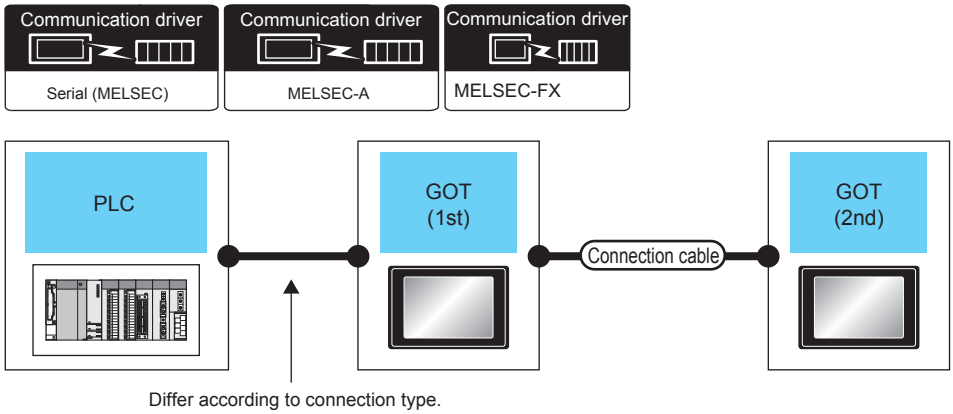

PLC		GOT (1st)			Connection cable			GOT (2nd)		Number of connectable equipment
Connection type	Communication type	Option device	Model	Option device	Communication type	Cable model	Max. distance	Option device	Model	
For the system configuration between a got and A plc, refer to the following. ☞ Page 375 DIRECT CPU CONNECTION (SERIAL) ☞ Page 439 SERIAL COMMUNICATION CONNECTION[*1]	RS-422	- (Built into GOT)	GT21 07W, GT21 05Q, GS21	-	RS-232	GT01-C30R2-9S(3m) or User preparing Page 1080 RS-232 connection diagram 1)	15m	- (Built into GOT)	GT21 07W, GT21 05Q, GS21	2 GOTs for one serial port [*5]
						User preparing Page 1080 RS-232 connection diagram 3)	15m	- (Built into GOT)	GT21 04R, GT21 03P 04P R2	
						GT01-C30R2-6P	3m	- (Built into GOT)	GT21 03P 04P R4, GT21 03P 04P R2	
						GT01-C30R2-9S(3m) or User preparing Page 1080 RS-232 connection diagram 1)	15m	GT10-C02H-6PT9P[*3]		
		- (Built into GOT)	GT21 04R	-	RS-232	User preparing Page 1081 RS-232 connection diagram 6)	15m	- (Built into GOT)	GT21 07W, GT21 05Q, GS21	
						User preparing Page 1081 RS-232 connection diagram 4)	15m	- (Built into GOT)	GT21 04R, GT21 03P 04P R2	
						GT10-C30R2-6P(3m)[*4]	3m	- (Built into GOT)	GT21 03P 04P R4, GT21 03P 04P R2	
						User preparing Page 1081 RS-232 connection diagram 6)	15m	GT10-C02H-6PT9P[*3]		

PLC		GOT (1st)			Connection cable			GOT (2nd)		Number of connectable equipment
Connection type	Communication type	Option device	Model	Option device	Communication type	Cable model	Max. distance	Option device	Model	
For the system configuration between a got and A plc, refer to the following. ☞ Page 375 DIRECT CPU CONNECTION (SERIAL) ☞ Page 439 SERIAL COMMUNICATION CONNECTION[*1]	RS-422	- (Built into GOT)	GT21 03P 04P R4	-	RS-232	GT01-C30R2-6P	3m	- (Built into GOT)	GT21 07W GT21 05Q GS21	2 GOTs for one serial port [*5]
				GT10-C02H-6PT9P[*3]		GT01-C30R2-9S(3m) or User preparing Page 1080 RS-232 connection diagram 1)	15m			
				-		GT10-C30R2-6P(3m)[*4]	3m	- (Built into GOT)	GT21 04R GT21 03P 04P R2	
				GT10-C02H-6PT9P[*3]		User preparing Page 1080 RS-232 connection diagram 3)	15m			
				GT10-C02H-6PT9P[*3]		GT01-C30R2-9S(3m) or User preparing Page 1080 RS-232 connection diagram 1)	15m	GT10-C02H-6PT9P[*3]	GT21 04R GT21 03P 04P R2	
				GT10-C02H-6PT9P[*3]		GT01-C30R2-6P	3m	- (Built into GOT)	GT21 04R GT21 03P 04P R2	
				-		GT01-C30R2-6P	3m	GT10-C02H-6PT9P[*3]		
		GT10-C02H-9SC	GT21 04R	-	RS-232	User preparing Page 1081 RS-232 connection diagram 6)	15m	- (Built into GOT)	GT21 07W GT21 05Q GS21	
						User preparing Page 1081 RS-232 connection diagram 4)	15m	- (Built into GOT)	GT21 04R GT21 03P 04P R2	
						GT10-C30R2-6P(3m)[*4]	3m	- (Built into GOT)	GT21 03P 04P R4 GT21 03P 04P R2	
						User preparing Page 1081 RS-232 connection diagram 6)	15m	GT10-C02H-6PT9P[*3]		

PLC		GOT (1st)			Connection cable			GOT (2nd)		Number of connectable equipment
Connection type	Communication type	Option device	Model	Option device	Communication type	Cable model	Max. distance	Option device	Model	
For the system configuration between a got and A plc, refer to the following. ☞ Page 375 DIRECT CPU CONNECTION (SERIAL) ☞ Page 439 SERIAL COMMUNICATION CONNECTION*1	RS-422	GT10-C02H-9SC	GT21 03P 04P R4	-	RS-232	GT01-C30R2-6P	3m	- (Built into GOT)	GT21 07W GT21 05Q GS21	2 GOTs for one serial port *5
				GT10-C02H-6PT9P*3		GT01-C30R2-9S(3m) or User preparing Page 1080 RS-232 connection diagram 1)	3m			
				-		GT10-C30R2-6P(3m)*4	3m	- (Built into GOT)	GT21 04R GT21 03P 04P R2	
				GT10-C02H-6PT9P*3		User preparing Page 1080 RS-232 connection diagram 3)	15m			
				GT10-C02H-6PT9P*3		GT01-C30R2-9S(3m) or User preparing Page 1080 RS-232 connection diagram 1)	15m	GT10-C02H-6PT9P*3	GT21 03P 04P R4 GT21 03P 04P R2	
				GT10-C02H-6PT9P*3		GT01-C30R2-6P	3m	- (Built into GOT)		
				-		GT01-C30R2-6P	3m	GT10-C02H-6PT9P*3		

*1 When connected to the Serial communication, the multiple connection function supports only RCPU, QCPU (Q mode), LCPU.

*2 For the connection to GOT, refer to the connection diagram.
☞ Page 1080 RS-232 connection diagram 2)

*3 When a GT10-C02H-6PT9P unit of the sub version A or B is used, do not ground the case of the D-sub (9-pin) connector.

*4 For the connection to GOT, refer to the connection diagram.
☞ Page 1081 RS-232 connection diagram 5)

*5 In the case of a serial communication module with two serial ports, four GOTs (two GOTs for each port) can be connected.

21.3 Connection Diagram

The following diagram shows the connection between the GOT and the PLC.

RS-232 cable

Connection diagram

■RS-232 connection diagram 1)

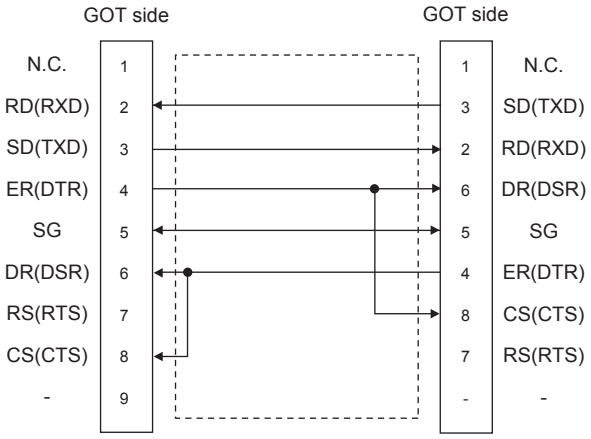

■RS-232 connection diagram 2)

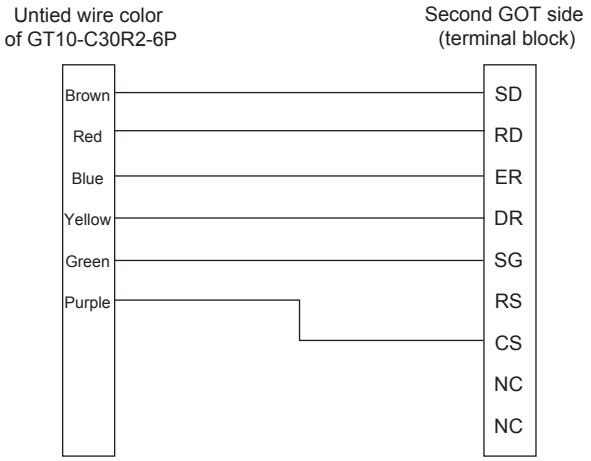

■RS-232 connection diagram 3)

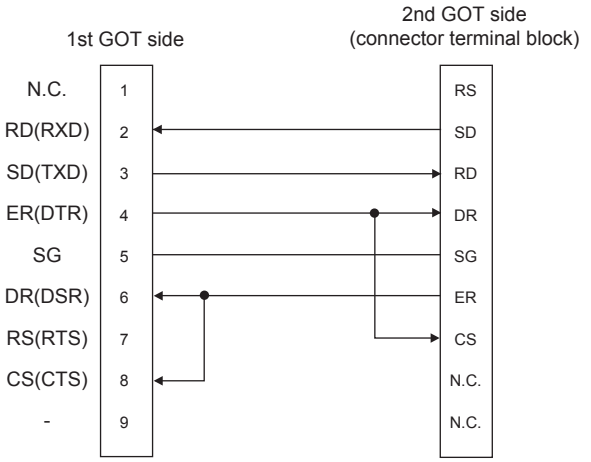

■RS-232 connection diagram 4)

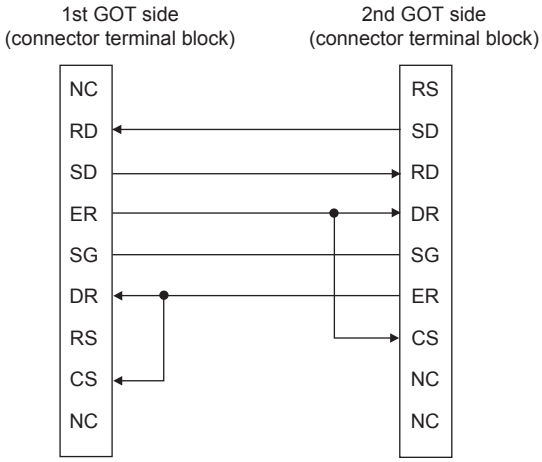

■RS-232 connection diagram 5)

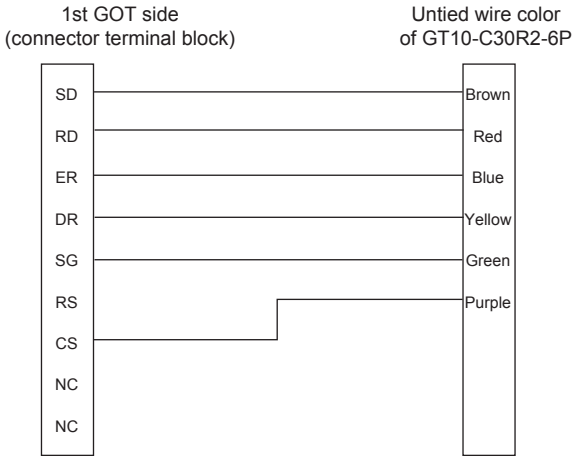

■RS-232 connection diagram 6)

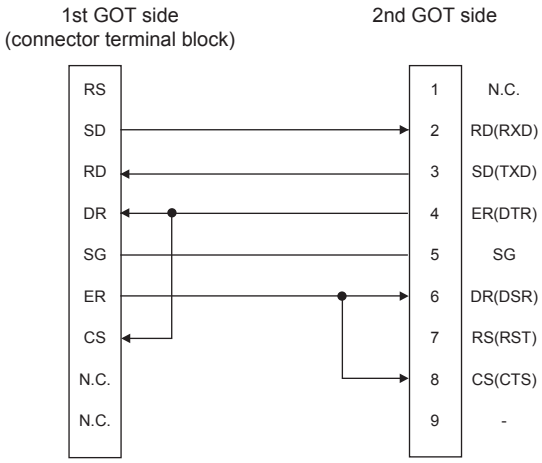

Precautions when preparing a cable

■Cable length

The length of the RS-232 cable must be 15m or less.

■GOT side connector

For the GOT side connector, refer to the following.

☞ Page 64 GOT connector specifications

RS-422 cable

Connection diagram

■RS-422 connection diagram 1)

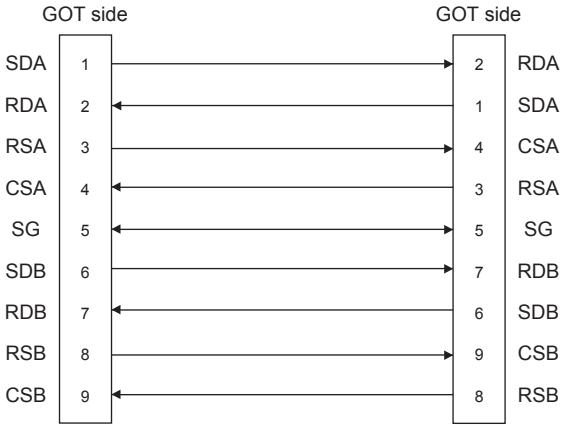

■RS-422 connection diagram 2)

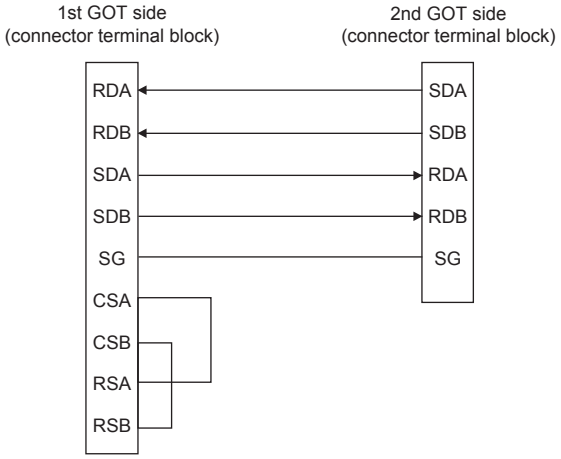

■RS-422 connection diagram 3)

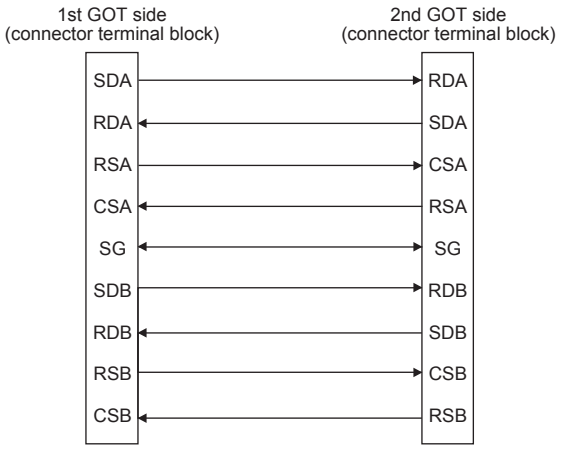

■RS-422 connection diagram 4)

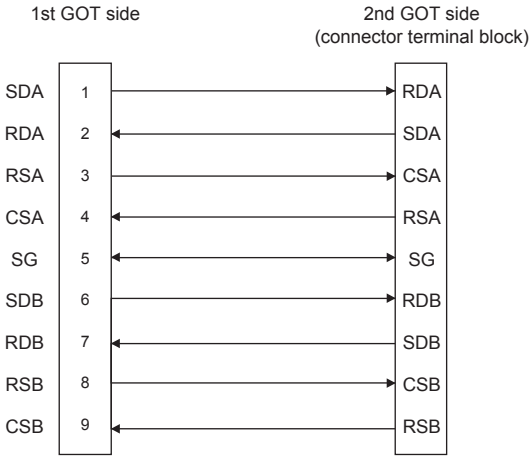

■RS-422 connection diagram 5)

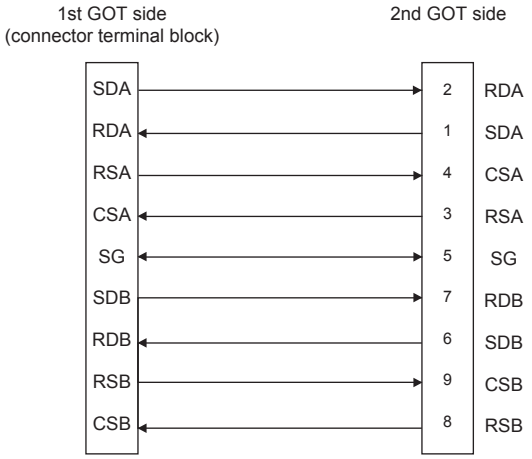

■RS-422 connection diagram 6)

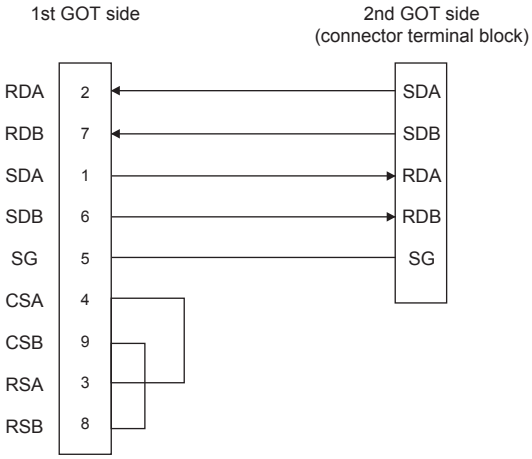

Precautions when preparing a cable

■Cable length

The length of the RS-422 cable must be 30m or less.

■GOT side connector

For the GOT side connector, refer to the following.

☞ Page 64 GOT connector specifications

Connecting terminating resistors

■GOT side

When connecting a PLC to the GOT, a terminating resistor must be connected to the GOT.

Set the terminating resistor selector of the GOT main unit to "330Ω".

For the procedure to set the terminating resistor, refer to the following.

☞ Page 68 Terminating resistors of GOT

21.4 GOT Side Settings

Setting communication interface (Controller Setting)

This section explains with an example of the following system configuration.

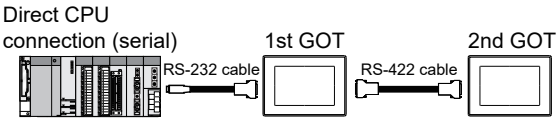

Setting for the first GOT

■Settings of communication interface connecting to the PLC

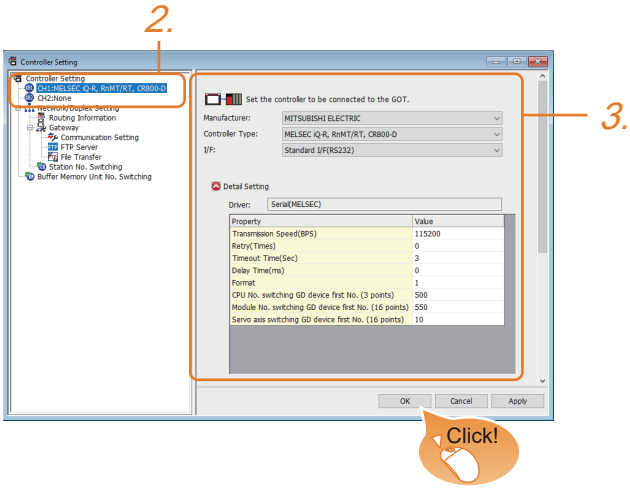

1. Select [Common] → [Controller Setting] from the menu.

2. In the [Controller Setting] window, select the channel No. to be used from the list menu.

3. Set the following items.

- [Manufacturer]: [MITSUBISHI ELECTRIC]
- [Controller Type]: Configure the setting according to the controller to be connected.
- [I/F]: [Standard I/F(RS232)]
- [Driver]: Select one of the following items according to the controller to be connected.

[Serial(MELSEC)]
[MELSEC-A]
[MELSEC-FX]

- [Detail Setting]: Configure the settings according to the usage environment.

☞ Page 1088 Communication detail settings

4. When you have completed the settings, click the [OK] button.

■Settings of communication interface connecting to the second GOT

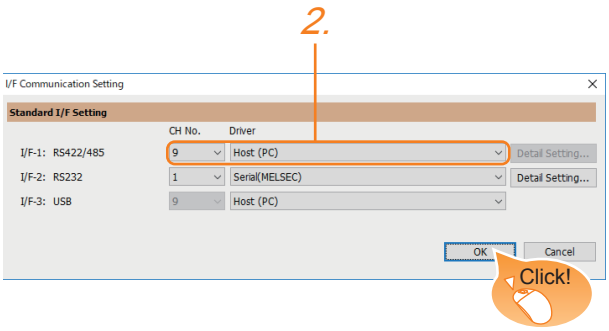

1. Select [Common] → [I/F Communication Setting] from the menu.

2. The I/F Connection list window is displayed. Select the following.

- I/F-1: RS422/485

CH No.: 9

Driver: Host (PC)

3. Click the [OK] button when settings are completed.

■[Transparent] setting

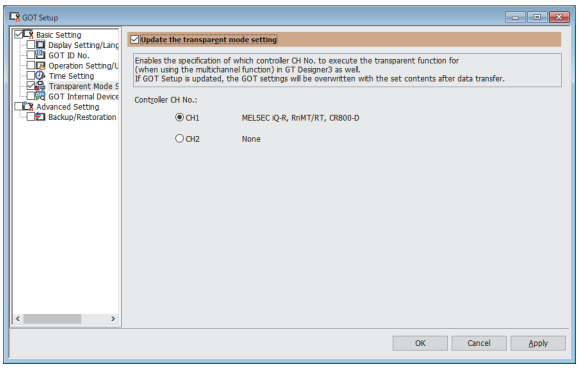

1. Select [Common] → [GOT Setup] → [Basic Setting] → [Transparent Mode Setting].

2. After [Controller CH No.] is displayed, check the channel No. connected to the target PLC of multiple GOTs.

For details of connectable models, refer to the following.

☞ Page 375 DIRECT CPU CONNECTION (SERIAL)
☞ Page 439 SERIAL COMMUNICATION CONNECTION

3. Click the [OK] button when settings are completed.

Setting for the second GOT

Set the communication interface connecting to the first GOT.

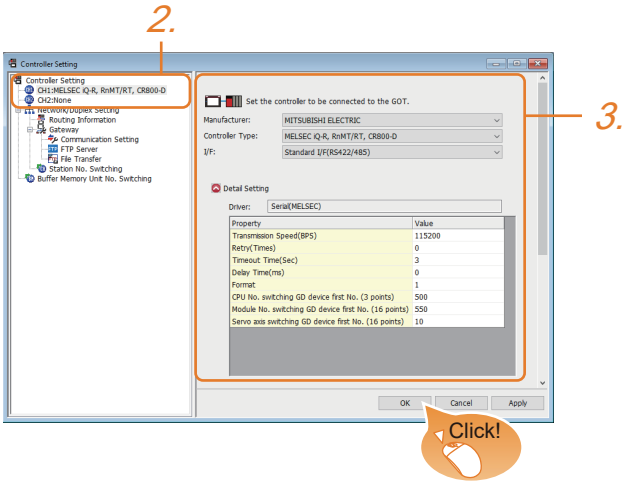

1. Select [Common] → [Controller Setting] from the menu.

2. In the [Controller Setting] window, select [CH1] from the list menu.

3. Set the following items.

- [Manufacturer]: [MITSUBISHI ELECTRIC]
- [Controller Type]: Set the same setting as the first GOT (communication interface connecting to the PLC).
- [I/F]: [Standard I/F(RS422/485)]
- [Driver]: Set the same setting as the first GOT (communication interface connecting to the PLC).
- [Detail Setting]: Set the same setting as the first GOT (communication interface connecting to the PLC).

4. When you have completed the settings, click the [OK] button.

Communication detail settings

Make the settings according to the usage environment.

Serial (MELSEC)

Property	Value
Transmission Speed(BPS)	115200
Retry(Times)	0
Timeout Time(Sec)	3
Delay Time(ms)	0
Format	1
CPU No. switching GD device first No. (3 points)	500
Module No. switching GD device first No. (16 points)	550
Servo axis switching GD device first No. (16 points)	10

Item	Description	Range
Transmission Speed	Set this item when change the transmission speed used for communication with the connected equipment. (Default: 115200bps) When the setting exceeds the limit of the connected equipment, communication is performed at the fastest transmission speed supported by the connected equipment.	9600bps, 19200bps, 38400bps, 57600bps, 115200bps
Retry	Set the number of retries to be performed when a communication error occurs. (Default: 0time)	0 to 5times
Timeout Time	Set the time period for a communication to time out. (Default: 3sec)	3 to 30sec
Delay Time	Set this item to adjust the transmission timing of the communication request from the GOT. (Default: 0ms)	0 to 300 (ms)
Format*1	Set the communication format. (Default: 1)	1, 2
CPU No. switching GD device first No. (3 points)	Set the start device number of the GD devices for CPU No. switching. (Default: 500) For the details, refer to the following. ☞ Page 1089 Start device number of the GD devices for CPU number switching	0 to 2032
Module No. switching GD device first No. (16 points)	Set the start device number of the GD devices for module No. switching. (Default: 550) For the details, refer to the following. ☞ Page 1090 Start device number of the GD devices for module number switching	0 to 2032
Servo axis switching GD device first No. (16 points)	Set the servo axis switching GD device first No. (Default: 10) For the details, refer to the following. ☞ Page 1091 Servo axis switching GD device first No.	0 to 2032

*1 The format setting differs depending on the controller.
L6ADP-R4 adapter: [2]
Other than L6ADP-R4 adapter: [1]

MELSEC-FX

Property	Value
Transmission Speed(BPS)	115200
Retry(Times)	0
Timeout Time(Sec)	3
Delay Time(ms)	0

Item	Description	Range
Transmission Speed	Set this item when change the transmission speed used for communication with the connected equipment. (Default: 115200bps) When the setting exceeds the limit of the connected equipment, communication is performed at the fastest transmission speed supported by the connected equipment.	9600bps, 19200bps, 38400bps, 57600bps, 115200bps
Retry	Set the number of retries to be performed when a communication error occurs. (Default: 0time)	0 to 5times
Timeout Time	Set the time period for a communication to time out. (Default: 3sec)	1 to 30sec
Delay Time	Set this item to adjust the transmission timing of the communication request from the GOT. (Default: 0ms)	0 to 300 (ms)

MELSEC-A

Property	Value
Transmission Speed(BPS)	9600

Item	Description	Range
Transmission Speed	Set this item when change the transmission speed used for communication with the connected equipment. (Default: 9600bps) When the setting exceeds the limit of the connected equipment, communication is performed at the fastest transmission speed supported by the connected equipment.	9600bps

Point

• Communication interface setting by the Utility

The communication interface setting can be changed on the Utility's [Communication setting] after writing [Controller Setting] of project data.

For details on the Utility, refer to the following manual.

GOT2000 Series User's Manual (Utility)

• Precedence in communication settings

When settings are made by GT Designer3 or the Utility, the latest setting is effective.

Start device number of the GD devices for CPU number switching

■Specifying a CPU number with a device

[CPU No.] can be specified with the GOT internal registers (GD devices) by specifying a value (100 to 102) to [CPU No.] in the device setting dialog in GT Designer3.

Set the start device number of the GD devices to be used in [CPU No. switching GD device first No. (3 points)].

Specify [CPU No.] with the three consecutive GD devices, starting the set device number.

When [500] is set to [CPU No. switching GD device first No. (3 points)], GD500 to GD502 are used to specify [CPU No.] as shown in the following table.

CPU No.	GD device	Setting range
100	GD500	1 to 4 Setting an invalid value causes a communication timeout error. Specifying a nonexistent CPU No. or a CPU No. not supporting a multiple CPU system with a device causes a controller error.
101	GD501	
102	GD502	

■Specifying a CPU number with a device on the initially-displayed screen

Set [CPU No. switching GD device first No. (3 points)] so that the values of the GD devices are retained and monitored upon the GOT startup.

■Specifying a CPU number with a device in a multi-channel connection

If the setting range of [CPU No. switching GD device first No. (3 points)] set in each channel overlaps, the monitoring target CPU No. set to each channel is switched simultaneously.

Set [CPU No. switching GD device first No. (3 points)] in each channel so that the setting range does not overlap.

■Specifying a CPU number and a station number with devices in a multi-channel connection

When GD10 to GD25 are used to specify the station No. of an inverter or non-Mitsubishi temperature controller connected, setting [10] to [CPU No. switching GD device first No. (3 points)] in a different channel switches the monitoring target CPU No. and station No. of an inverter or non-Mitsubishi temperature controller set to each channel simultaneously.

Set [CPU No. switching GD device first No. (3 points)] so that the setting range does not overlap the station No. of an inverter or non-Mitsubishi temperature controller.

Start device number of the GD devices for module number switching

■Specifying a module number with a device

In a connection via a simple motion module, [Unit No.] can be specified with the GOT internal registers (GD devices) by specifying a value (100 to 10F) to [Unit No.] in the device setting dialog in GT Designer3.
Set the start device number of the GD devices to be used in [Module No. switching GD device first No. (16 points)].
Specify [Unit No.] with the 16 consecutive GD devices, starting the set device number.
When [550] is set to [Module No. switching GD device first No. (16 points)], GD550 to GD565 are used to specify [Unit No.] as shown in the following table.

Unit No.	GD device	Setting range
100	GD550	The setting range depends on [Unit Type]. • When [MELSEC iQ-R, RnMT/RT, CR800-D], [MELSEC-Q, Q17nD/M/DR/DSR, CRnD-700], [MELSEC-L], or [MELIPC] is selected for [Controller Type] 00 to FF • When [MELSEC iQ-F] is selected for [Unit Type] 01 to 10 Setting an invalid value causes a device range error.
101	GD551	
102	GD552	
103	GD553	
104	GD554	
105	GD555	
106	GD556	
107	GD557	
108	GD558	
109	GD559	
10A	GD560	
10B	GD561	
10C	GD562	
10D	GD563	
10E	GD564	
10F	GD565	

■Specifying a module number with a device on the initially-displayed screen

Set [Module No. switching GD device first No. (16 points)] so that the values of the GD devices are retained and monitored upon the GOT startup.

■Specifying a module number with a device in a multi-channel connection

If the setting range of [Module No. switching GD device first No. (16 points)] set in each channel overlaps, the module No. of the simple motion module via the servo amplifier device of each channel is switched simultaneously.
Set [Module No. switching GD device first No. (16 points)] for each channel so that the setting range does not overlap.

■Specifying a station number and a module number with devices in a multi-channel connection

When GD10 to GD25 are used to specify the station No. of an inverter or non-Mitsubishi temperature controller connected, setting [10] to [Module No. switching GD device first No. (16 points)] switches the module No. of the simple motion module via the servo amplifier device and the station No. of an inverter or non-Mitsubishi temperature controller set to each channel simultaneously.
Set [Module No. switching GD device first No. (16 points)] so that the setting range does not overlap the station No. of an inverter or non-Mitsubishi temperature controller.

Servo axis switching GD device first No.

■Indirect specification of the servo axis No.

In a connection via a Motion CPU or Simple Motion module, a servo axis No. can be indirectly specified with GOT internal registers (GD devices) by specifying a value (100 to 115) to the axis No. of the servo amplifier device.
Set the start device number of the GD devices to be used in [Servo axis switching GD device first No. (16 points)].
Specify a servo axis number with 16 consecutive GD devices, starting the set device number.
When [10] is set to [Servo axis switching GD device first No. (16 points)], GD10 to GD25 are used to specify a servo axis number as shown in the following table.

Servo axis No.	GD device	Setting range
100	GD10	1 to 64 Setting an invalid value causes a device range error.
101	GD11	
102	GD12	
103	GD13	
104	GD14	
105	GD15	
106	GD16	
107	GD17	
108	GD18	
109	GD19	
110	GD20	
111	GD21	
112	GD22	
113	GD23	
114	GD24	
115	GD25	

■Specifying a servo axis number with a device on the initially-displayed screen

Set [Servo axis switching GD device first No. (16 points)] so that the values of the GD devices are retained and monitored upon the GOT startup.

■Specifying a servo axis number with a device in a multi-channel connection

If the setting rage of [Servo axis switching GD device first No. (16 points)] set in each channel overlaps, the axis No. of the servo amplifier of each channel is switched simultaneously.
Set [Servo axis switching GD device first No. (16 points)] for each channel so that the setting range does not overlap.

■Specifying a station number and a servo axis number with devices in a multi-channel connection

When GD10 to GD25 are used to specify the station No. of an inverter or non-Mitsubishi temperature controller connected, setting [10] to [Servo axis switching GD device first No. (16 points)] switches the axis No. of the servo amplifier and the station No. of an inverter or non-Mitsubishi temperature controller set to each channel simultaneously.
Set [Servo axis switching GD device first No. (16 points)] so that the setting range does not overlap the station No. of an inverter or non-Mitsubishi temperature controller.

21.5 Precautions

GOT's communication timing

■GOT's communication timing

Adjust the communication timing so that, after applying the power to the system, the communication with the connected device (MITSUBISHI ELECTRIC PLC) is performed in order starting from the first GOT (from the 1st GOT to the 2nd, and so on).

When the communication is failed, retries are performed. And if the predetermined time has elapsed, a communication error occurs.

- If the first GOT is turned on after a while the second GOT is turned on, because the communication start of the second GOT is delayed, a communication error may be detected at the second GOT.
- If the system power is turned on simultaneously and it takes time to start the communication of the second GOT, a communication error may be developed.

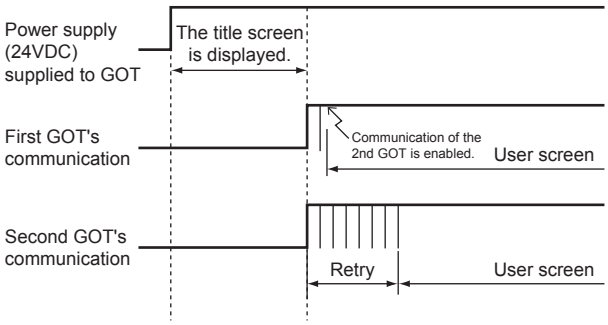

■Adjusting communication timing

- When powering up the system simultaneously

Using the utility or selecting [GOT Setup] - [Basic Setting] - [Display Setting/Language Setting] from GT Designer3, set the timing for displaying the title by adding a delay to each setting for the GOTs from the first GOT.

During the opening process, communication with the connected device does not start.

Example: Set value of [Opening Screen Time] (Inside (): set value)

First module (5s) → Second module (10s)

- When powering on devices individually

Turn on the connected device first, and then the first GOT, the second GOT, and so on.

Using the FA transparent function

When multiple GOTs are connected, the FA transparent function is not available.

Monitoring stop condition for the GOT in the multiple-GT11 connection

In the system where multiple GOTs are connected, when GOT setup is performed with the first GOT, the second GOT stops monitoring.

When the first GOT resumes monitoring, the second GOT also resumes monitoring.

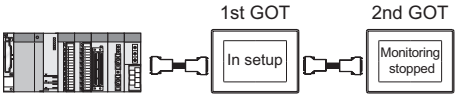

When PLC power disconnection occurs in the multiple-GOT connection

In the system where multiple GOTs are connected, when the communication between the PLC and the first GOT is stopped due to PLC power disconnection and a disconnection of the communication cable between the PLC and the first GOT, the GOT waits for timeout against the communication request from the peripheral devices (GX Developer, etc.), and recovery of monitoring between the PLC and the GOT is delayed.

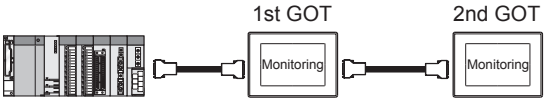

MEMO

PART 5 MULTI-CHANNEL FUNCTION

22 MULTI-CHANNEL FUNCTION

22 MULTI-CHANNEL FUNCTION

- Page 1096 What is Multi-channel Function?
- Page 1098 System Configuration Example
- Page 1101 GOT Side Settings
- Page 1122 Precautions
- Page 1123 Multi-channel Function Check Sheet

22.1 What is Multi-channel Function?

Multi-channel Function is a function to monitor up to four FA controllers (PLC CPU, temperature controller, inverter, etc.) on one GOT by writing multiple communication drivers in the GOT.

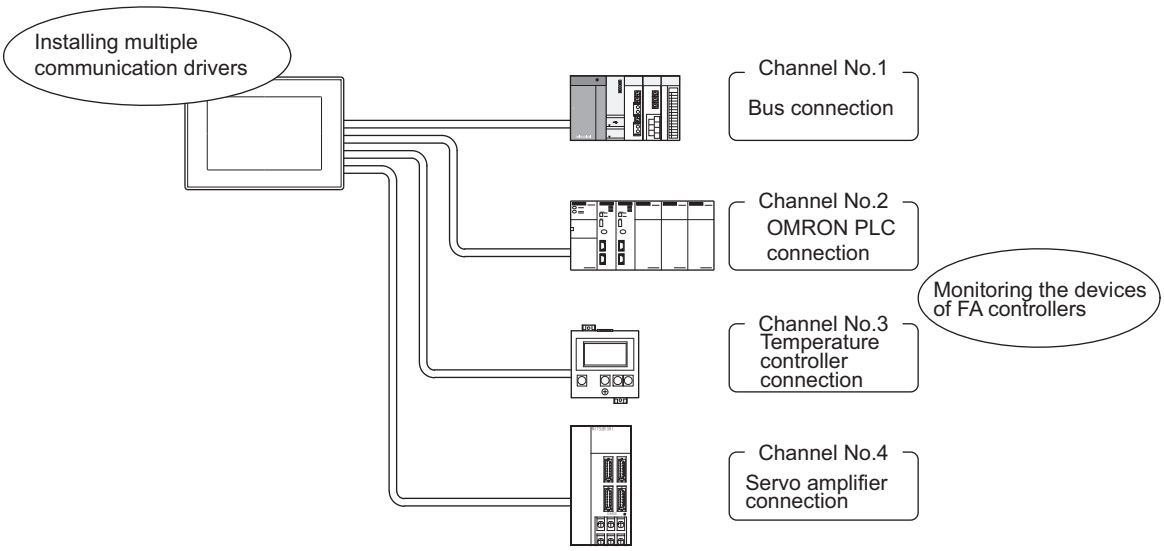

Point

- Before using the multi-channel function

This manual describes the procedure to use the multi-channel function, based on the following system configuration example.

☞ Page 1098 Example of bus connection or serial connection
☞ Page 1100 Example of multi-channel Ethernet connection

- System configuration when the multi-channel function is used

The system configuration between GOT and the controllers is the same as that of when not using the multi-channel function.

For the system configuration between GOT and the controllers, refer to the following.

☞ Each chapter indicating the system configuration

Features of the multi-channel function

■With a single unit of GOT, the system consisting of PLC CPU, temperature controller, servo amplifier and other controllers can be configured.

One GOT can monitor a PLC CPU, temperature controller and servo amplifier, etc. Therefore, the system configuration, in which several controllers are mixed, can be easily established.

In addition, each system can be monitored on the GOT screen, and the unified management of the information is possible.

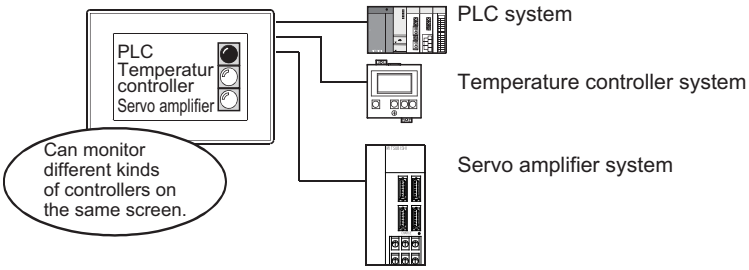

■Controlling FXCPU/third party PLC, etc. through the network (MELSECNET/H, etc.)

It is possible to control FXCPU/third party PLC, etc. through the network (MELSECNET/H, etc.).

For example, it is possible to execute read/write of a device such as FXCPU when the condition is satisfied, using the device of the PLC CPU on the network (MELSECNET/H, etc.) as the trigger for action.

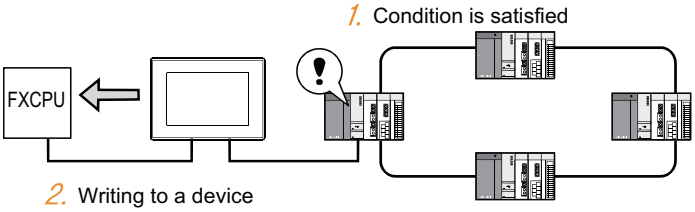

■Combination of Ethernet connection and bus/network connection is available with one GOT.

Ethernet connection and bus/network connection with one GOT enables the system configuration in which several networks are linked. (GT27, GT25 (except GT25-W and GT2505-V))

Also, the GOT can monitor multiple controllers on an Ethernet network. (Multi-channel Ethernet connection)

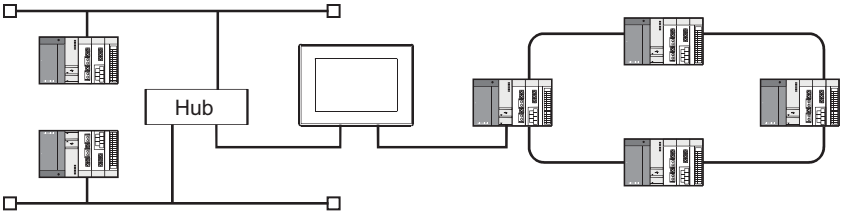

22.2 System Configuration Example

Example of bus connection or serial connection

One GOT can monitor a PLC CPU, temperature controller and servo amplifier, etc. Therefore, a system, in which several controllers are mixed, can be easily configured.

In addition, each system can be monitored on the GOT screen, and the unified management of the information is possible.

For details on the connection type and channel number to be used, refer to the following.

☞ Page 1104 Determining the connection type and channel No. (System selection)

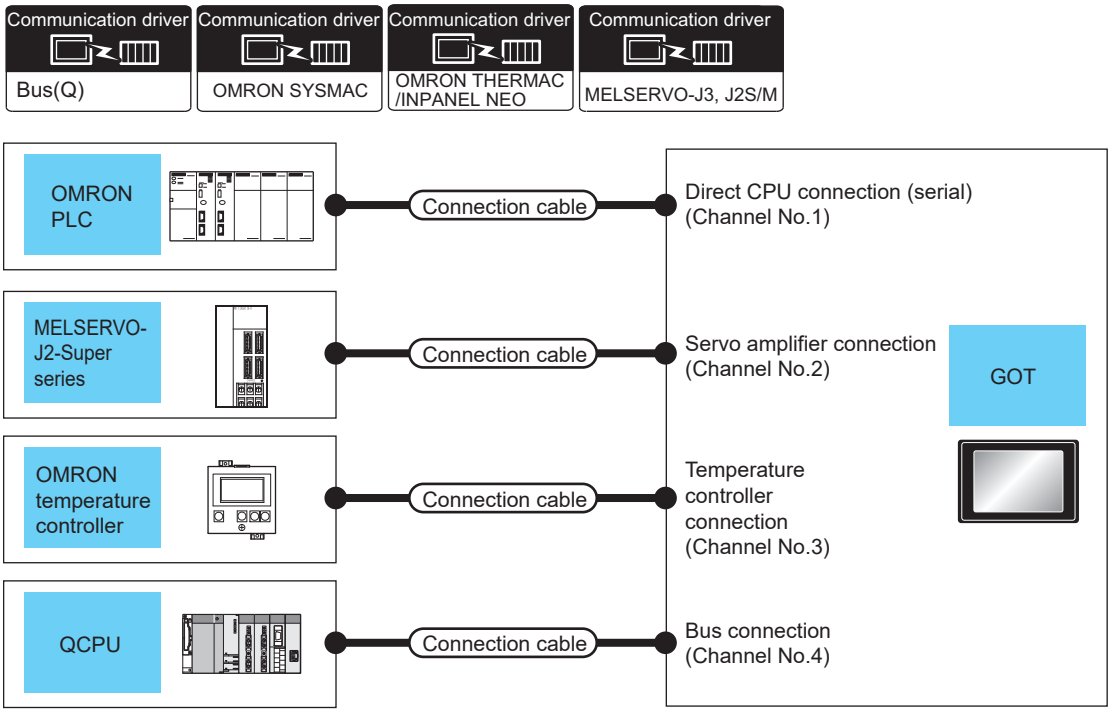

PLC	Connection type	Connection cable	GOT			Number of connectable equipment
			Channel No.	Option device *2	Model	
OMRON PLC	Direct CPU connection (serial)	For the system configuration between GOT and the controllers, refer to the following. ☞ Each chapter indicating the system configuration	1	- (Built into GOT)	GT27 GT25 GS25	4 connected equipment for 1 GOT (4 channels)
MELSERVO-J2-Super			2			
OMRON temperature controller			3	GT15-RS2-9P		
MELSEC-Q	Bus connection		4	GT15-QBUS		
OMRON PLC	Direct CPU connection (serial)		1	- (Built into GOT)	GT23 GT21 GS21 *1	2 connected equipment for 1 GOT (2 channels)
MELSERVO-J2-Super			2			

*1 Only one channel is available for GT2104-PMBLS and GT2103-PMBLS.

*2 GT25-W, GT2505-V, and GS25 do not support options.

Point

Controllers that use Channels No.5 to 8

The following shows the drivers that can be set to Channels No. 5 to 8.

For the system configuration and connection condition with the controller, refer to the chapter of each controller.

Channel No.	Driver*1	Reference
5 to 7	Barcode Reader, RFID Controller, PC Remote Operation (Serial)	GOT1000 Series Connection Manual (Microcomputer, MODBUS, Products, Peripherals) ➡ BAR CODE READER CONNECTION ➡ PC REMOTE CONNECTION ➡ RFID CONNECTION
8	Barcode Reader, RFID Controller, PC Remote Operation (Serial)	

*1 Only one channel can be assigned to one driver.

Example of multi-channel Ethernet connection

One GOT can make several Ethernet connections and the bus or network connections. Therefore, the system configuration, in which several networks are linked, can be established.

For details on the connection type and channel number to be used, refer to the following.

☞ Determining the connection type and channel No. (System selection)

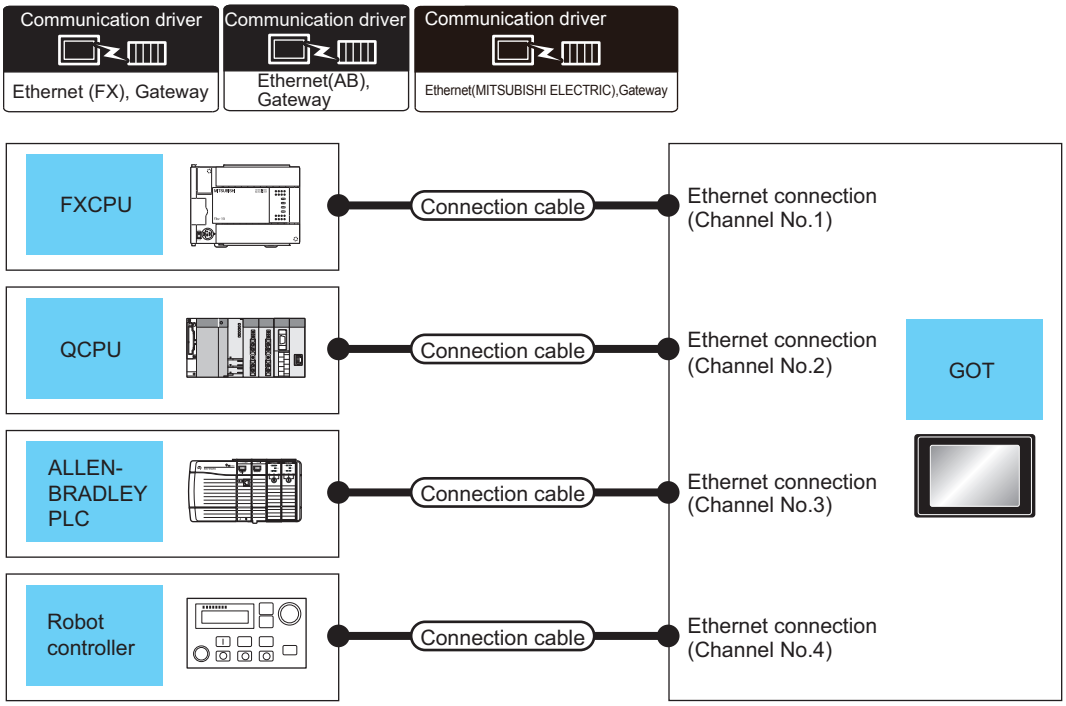

PLC	Connection type	Connection cable	GOT			Number of connectable equipment
			Channel No.	Option device	Model	
MELSEC-FX	Ethernet	For the system configuration between GOT and the controllers, refer to the following. ☞ Each chapter indicating the system configuration	1	Ethernet	GT27 GT25 GS25	4 connected equipment for 1 GOT (4 channels)
QCPU			2			
ALLEN-BRADLEY PLC			3			
Robot controller			4			
MELSEC-FX	Ethernet	For the system configuration between GOT and the controllers, refer to the following. ☞ Each chapter indicating the system configuration	1	- (Built into GOT)	GT23 GT21 GT21 07W GT21 04R GT21 03P 04P ETR4 GS21	2 connected equipment for 1 GOT (2 channels)
QCPU			2			

22.3 GOT Side Settings

Basics of interface selection

This section explains basic knowledge of the multi-channel function.

For the steps from system selection to screen design, refer to the following.

☞ Page 1103 General flow from system selection to drawing

Multi-channel function specifications

How the units are installed and the multi-channel function specifications are described below.

■Image drawing of unit installation

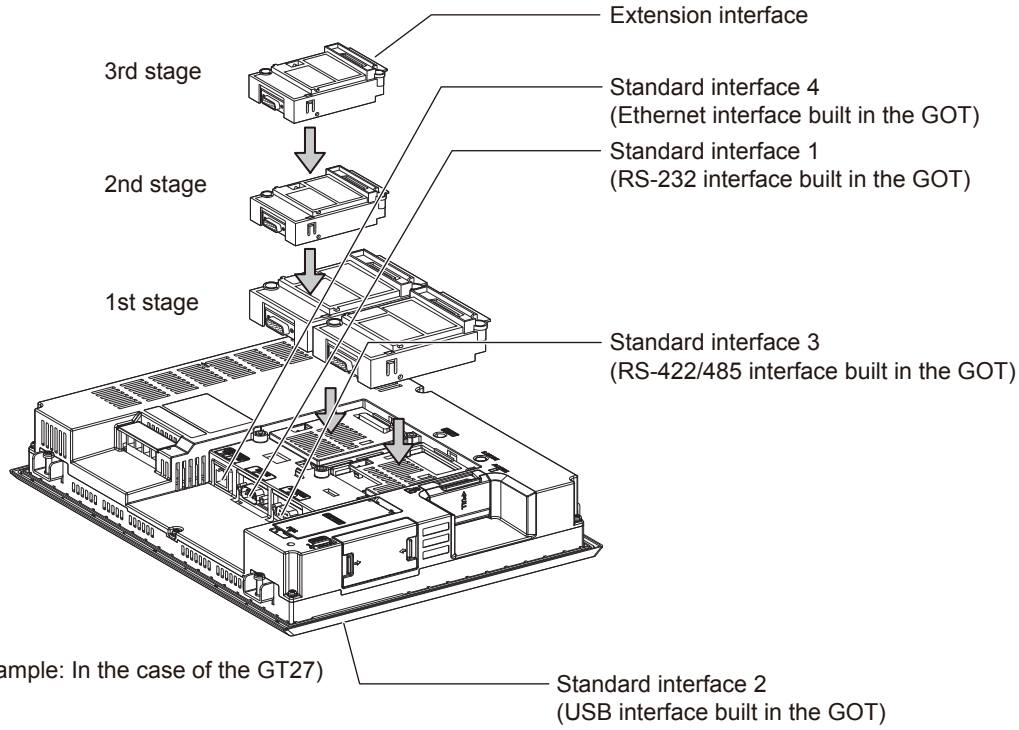

(Example: In the case of the GT27)

■Specifications

Item	Specifications	Description
Max. number of channels	4 channels	• In bus connection and network connection (*1), only 1 channel can be set for one GOT. • For the Ethernet connection (*2), up to 4 channels can be set. • When the Ethernet interface built in the GOT is used for connection other than communication with a controller (*3), the connection is not included in the count of the number of channels. • The interface used for connecting to an external device (*4) is not included in the count of the number of channels.
Max. installable number of modules	3	• Multiple identical units can be installed only for serial communication units. • It is necessary to calculate the consumed current. ☞ Page 1102 Calculating consumed current of GT2705-V
Allowable number of stages	Max. 3 stages (2 slots)	• A module that occupies 2 slots (*5, *6, *7) must be installed at the first stage. • For the video/RGB display, RGB output, and multimedia function, install only either one of the unit indicated in *6 at the first stage and the other units at the second or later stage. • When a unit indicated in *7 is used, other extension units cannot be installed. • The CF card unit must be installed on the last stage, if used.

*1 MELSECNET/H connection, MELSECNET/10 connection, CC-Link IE Controller Network connection, CC-Link connection (intelligent device station)
*2 Ethernet connection, MODBUS/TCP connection
*3 Gateway function, MES interface function, Ethernet download
*4 Barcode reader, RFID controller, or personal computer (writing remote personal computer operation (serial), FA transparent function, OS install, project data)
*5 GT15-QBUS2, GT15-ABUS2, GT15-J71GP23-SX, GT15-J71LP23-25, GT15-J71BR13, GT15-J61BT13
*6 GT27-V4-Z, GT27-R2-Z, GT27-V4R1-Z, GT27-ROUT-Z, GT27-MMR-Z
*7 GT15-75QBUSL, GT15-75QBUS2L, GT15-75ABUSL, GT15-75ABUS2L

Calculating consumed current of GT2705-V

For using multiple extension units, a bar code reader, or a RFID controller, the total current for the extension units, bar code reader, or RFID controller must be within the current that the GT2705-V can supply.

GOT other than GT2705-V, the calculation of the current value is not required.

For details of the calculation of the consumed current when GT2705-V is used, refer to the following manual.

📖GOT2000 Series User's Manual (Hardware)

General flow from system selection to drawing

System selection for using the multi-channel function is explained below.

Make selection and setting for the multi-channel function by following the order shown below.

1. System selection

Determine the connection type and the channel No. to be used.

☞ Page 1104 Determining the connection type and channel No. (System selection)

2. Interface selection

Determine the GOT side interface and communication units to be used for the multichannel function.

☞ Page 1110 Determining the GOT side interface (Interface selection)

3. Checking the unit installation position

Determine the communication unit installation position.

☞ Page 62 Precautions when installing units on top of one another

4. Make settings for Communication Settings.

☞ Page 1117 Setting for communication settings

5. Confirm items to know before starting drawing.

☞ Page 1120 Items to be checked before starting drawing

Determining the connection type and channel No. (System selection)

Determining the connection type

■For GT27, GT25, GT23, GS25

GT27, GT25, GT23, and GS25 allow the use of the following bus/network connections, Ethernet connections, and serial connections simultaneously.

Connection type		Reference
Bus/network connection	Bus connection	☞ Page 493 BUS CONNECTION
	MELSECNET/H connection (PLC to PLC network)	☞ Page 541 MELSECNET/H, MELSECNET/10 CONNECTION (PLC TO PLC NETWORK)
	MELSECNET/10 connection (PLC to PLC network)	☞ Page 541 MELSECNET/H, MELSECNET/10 CONNECTION (PLC TO PLC NETWORK)
	CC-Link IE TSN connection	☞ Page 595 CC-Link IE TSN CONNECTION
	CC-Link IE Controller Network connection	☞ Page 625 CC-Link IE CONTROLLER NETWORK CONNECTION
	CC-Link IE Field Network connection	☞ Page 665 CC-Link IE FIELD NETWORK CONNECTION
	CC-Link connection (intelligent device station)	☞ Page 695 CC-Link CONNECTION (INTELLIGENT DEVICE STATION)
	CNC connection (MELSECNET/10 connection (PLC to PLC network))	☞ Page 1001 MELSECNET/10 connection (PLC to PLC network)
	CNC connection (CC-Link connection (intelligent device station))	☞ Page 1002 CC-Link connection (intelligent device station)
Ethernet connection	Ethernet connection	☞ Page 217 ETHERNET CONNECTION
	Robot controller connection	☞ Page 983 ROBOT CONTROLLER CONNECTION
	CNC connection (Ethernet connection)	☞ Page 1003 Ethernet connection
	Third party PLC connection (Ethernet connection)	📖Non-Mitsubishi Electric Products 1 • 4. CONNECTION TO OMRON PLC 4.3 Ethernet Connection 📖Non-Mitsubishi Electric Products 2 • 4. CONNECTION TO FUJI PLC 4.3 Ethernet Connection • 6. CONNECTION TO YASKAWA PLC 6.3 Ethernet Connection • 7. CONNECTION TO YOKOGAWA PLC 7.3 Ethernet Connection • 10. CONNECTION TO ALLEN-BRADLEY PLC 10.3 Ethernet Connection • 15. CONNECTION TO SIEMENS PLC 15.3 Ethernet Connection
	Microcomputer connection (Ethernet)	📖Microcomputers, MODBUS/Fieldbus Products, Peripherals • 3. MICROCOMPUTER CONNECTION (ETHERNET)
	MODBUS/TCP connection	📖Microcomputers, MODBUS/Fieldbus Products, Peripherals • 6. MODBUS/TCP CONNECTION

Connection type		Reference
Serial connection	Direct CPU connection (serial)	☞ Page 375 DIRECT CPU CONNECTION (SERIAL)
	Serial communication connection	☞ Page 439 SERIAL COMMUNICATION CONNECTION
	CC-Link connection (via G4)	☞ Page 783 CC-Link CONNECTION (Via G4)
	Inverter connection	☞ Page 839 INVERTER CONNECTION
	Servo amplifier connection	☞ Page 931 SERVO AMPLIFIER CONNECTION
	CNC connection (serial connection)	☞ Page 1000 Direct CPU connection (serial)
	GOT multi-drop connection	☞ Page 1034 GOT MULTI-DROP CONNECTION
	Third party PLC connection (serial connection)	📖Non-Mitsubishi Electric Products 1 • 4. CONNECTION TO OMRON PLC 4.2 Serial Connection • 6. CONNECTION TO KEYENCE PLC • 7. CONNECTION TO KOYO EI PLC • 8. CONNECTION TO JTEKT PLC • 9. CONNECTION TO SHARP PLC • 12. CONNECTION TO TOSHIBA PLC • 13. CONNECTION TO SHIBAURA MACHINE PLC • 15. CONNECTION TO PANASONIC INDUSTRIAL DEVICES SUNX PLC 📖Non-Mitsubishi Electric Products 2 • 2. CONNECTION TO HITACHI IES PLC • 3. CONNECTION TO HITACHI PLC • 4. CONNECTION TO FUJI FA PLC • 6. CONNECTION TO YASKAWA PLC 6.2 Serial Connection • 7. CONNECTION TO YOKOGAWA PLC 7.2 Serial Connection • 10. CONNECTION TO ALLEN-BRADLEY PLC 10.2 Serial Connection • 11. CONNECTION TO GE PLC
Serial connection	Third party PLC connection (serial connection)	📖Non-Mitsubishi Electric Products 2 • 12. CONNECTION TO LS INDUSTRIAL SYSTEMS PLC • 15. CONNECTION TO SIEMENS PLC
	Third party safety controller connection	📖Non-Mitsubishi Electric Products 2 • 14. CONNECTION TO SICK SAFETY CONTROLLER
	Third party servo amplifier connection	📖Non-Mitsubishi Electric Products 1 • 14. CONNECTION TO PANASONIC SERVO AMPLIFIER
	Third party robot controller connection	📖Non-Mitsubishi Electric Products 1 • 2. CONNECTION TO IAI ROBOT CONTROLLER
	Third party temperature controller connection	📖Non-Mitsubishi Electric Products 1 • 3. CONNECTION TO AZBIL CONTROL EQUIPMENT • 5. CONNECTION TO OMRON TEMPERATURE CONTROLLER • 10. CONNECTION TO SHINKO TECHNOS INDICATING CONTROLLER • 11. CONNECTION TO CHINO CONTROLLER 📖Non-Mitsubishi Electric Products 2 • 5. CONNECTION TO FUJI SYS TEMPERATURE CONTROLLER • 8. CONNECTION TO YOKOGAWA TEMPERATURE CONTROLLER • 9. CONNECTION TO RKC TEMPERATURE CONTROLLER
	Microcomputer Connection (Serial)	📖Microcomputers, MODBUS/Fieldbus Products, Peripherals • 2. MICROCOMPUTER CONNECTION (SERIAL)
	MODBUS/RTU connection	📖Microcomputers, MODBUS/Fieldbus Products, Peripherals • 5. MODBUS/RTU CONNECTION

The following shows the applicable combinations of connection types, the number of channels, and restricted functions.

○: Allowed △: Restricted

Item	Allowable combination of connection types	GOT to be used	Functions that are restricted by the connection type*1		
		GT27	FA transparent function		
			RS-232	USB	Ethernet
(a)	• Bus/network connection: 1 channel • Serial connection: 1 to 3 channels	Max. 4 channels	△*2	○	○
(b)	• Bus/network connection: 1 channel • Ethernet connection: 1 to 3 channels	Max. 4 channels	△*2	○	△*3
(c)	• Ethernet connection: 1 to 3 channels • Serial connection: 1 to 3 channels	Max. 4 channels	△*2	○	△*3
(d)	• Bus/network connection: 1 channel • Ethernet connection: 1 to 2 channels • Serial connection: 1 to 2 channels	Max. 4 channels	△*2	○	△*3
(e)	• Serial connection: 4 channels	Max. 4 channels	△*2	○	○
(f)	• Ethernet connection: 4 channels	Max. 4 channels	△*2	○	×

*1 When the functions below are used, the connectable number of channels may be restricted depending on the combination of the functions to be used.
• Barcode function • RFID function • Remote personal computer operation function
• Video display function (GT27 only) • Multimedia function (GT27 only) • External I/O function
• RGB display function (GT27 only) • Report function • Sound output function
The video display function, multimedia function and RGB display function cannot be used together.
For details, refer to the following.
☞ Page 1110 Determining the GOT side interface (Interface selection)

*2 For the FA transparent function via the RS-232 connection, the RS-232 interface built in the GOT is available only.
When the RS-232 interface built in the GOT is already used, the FA transparent function is not available.

*3 When a GOT and PLC are connected by Ethernet connection, connecting a GOT and a personal computer by Ethernet is not allowed.

■For GT21

For GT21, the combinations of the Ethernet connection and the serial connection are available as shown in the following table.

Connection type		Reference
Ethernet connection	Ethernet connection	☞ Page 217 ETHERNET CONNECTION
	Robot controller connection	☞ Page 983 ROBOT CONTROLLER CONNECTION
	Third party PLC connection (Ethernet connection)	📖Non-Mitsubishi Electric Products 1 • 4. CONNECTION TO OMRON PLC 4.3 Ethernet Connection • 6. CONNECTION TO KEYENCE PLC 6.3 Ethernet Connection 📖Non-Mitsubishi Electric Products 2 • 4. CONNECTION TO FUJI PLC 4.3 Ethernet Connection • 6. CONNECTION TO YASKAWA PLC 6.3 Ethernet Connection • 15. CONNECTION TO SIEMENS PLC 15.3 Ethernet Connection
	Microcomputer connection (Ethernet)	📖Microcomputers, MODBUS/Fieldbus Products, Peripherals • 3. MICROCOMPUTER CONNECTION (ETHERNET)
	MODBUS/TCP connection	📖Microcomputers, MODBUS/Fieldbus Products, Peripherals • 6. MODBUS/TCP CONNECTION
Serial connection	Direct CPU connection (serial)	☞ Page 375 DIRECT CPU CONNECTION (SERIAL)
	Serial communication connection	☞ Page 439 SERIAL COMMUNICATION CONNECTION
	CC-Link connection (via G4)	☞ Page 783 CC-Link CONNECTION (Via G4)
	Inverter connection	☞ Page 839 INVERTER CONNECTION
	Servo amplifier connection	☞ Page 931 SERVO AMPLIFIER CONNECTION
	GOT multi-drop connection	☞ Page 1034 GOT MULTI-DROP CONNECTION
	Third party PLC connection (Serial connection)	📖Non-Mitsubishi Electric Products 1 • 4. CONNECTION TO OMRON PLC 4.2 Serial Connection • 6. CONNECTION TO KEYENCE PLC • 15. CONNECTION TO PANASONIC INDUSTRIAL DEVICES SUNX PLC
	Microcomputer Connection (Serial)	📖Microcomputers, MODBUS/Fieldbus Products, Peripherals • 2. MICROCOMPUTER CONNECTION (SERIAL)
	MODBUS/RTU connection	📖Microcomputers, MODBUS/Fieldbus Products, Peripherals • 5. MODBUS/RTU CONNECTION

The number of channels and the functions that can be used differ depending on the GOT to be used.
The table below shows the allowable combinations of connection types, the number of channels and restricted functions.
○: Allowed △: Restricted

GOT to be used	Allowable combination of connection types	Max. number of channels	Functions that are restricted by the connection type*1		
			FA transparent function		
			RS-232	USB	Ethernet
GT2104-RTBD	• Ethernet connection: 1 to 2 channels • Serial connection: 1 to 2 channels	Max. 2 channels	△*2	○	△*3
GT2104-PMBD GT2103-PMBD	• Ethernet connection: 1 to 2 channels • Serial connection: 1 channels	Max. 2 channels	-	○	△*3
GT2104-PMBDS GT2104-PMBDS2 GT2103-PMBDS	• Serial connection: 2 channels	Max. 2 channels	△*2	○	-

*1 When the functions below are used, the connectable number of channels may be restricted depending on the combination of the functions to be used.
• Barcode function • RFID function
For details, refer to the following.
☞ Page 1110 Determining the GOT side interface (Interface selection)

*2 For the FA transparent function via the RS-232 connection, the RS-232 interface built in the GOT is available only.
When the RS-232 interface built in the GOT is already used, the FA transparent function is not available.

*3 When a GOT and PLC are connected by Ethernet connection, connecting a GOT and a personal computer by Ethernet is not allowed.

■For GS21

For GS21, the combinations of the Ethernet connection and the serial connection are available as shown in the following table.

Connection type		Reference
Ethernet connection	Ethernet connection	☞ Page 217 ETHERNET CONNECTION
Serial connection	Direct CPU connection (serial)	☞ Page 375 DIRECT CPU CONNECTION (SERIAL)
	Computer link connection	☞ Page 439 SERIAL COMMUNICATION CONNECTION
	CC-Link connection (via G4)	☞ Page 783 CC-Link CONNECTION (Via G4)
	Inverter connection	☞ Page 839 INVERTER CONNECTION
	Servo amplifier connection	☞ Page 931 SERVO AMPLIFIER CONNECTION
	Third party PLC connection (Serial connection)	📖Non-Mitsubishi Electric Products 1 • 4. CONNECTION TO OMRON PLC 4.2 Serial Connection • 6. CONNECTION TO KEYENCE PLC • 15. CONNECTION TO PANASONIC INDUSTRIAL DEVICES SUNX PLC
	Microcomputer Connection (Serial)	📖Microcomputers, MODBUS/Fieldbus Products, Peripherals • 2. MICROCOMPUTER CONNECTION (SERIAL)
	MODBUS/RTU connection	📖Microcomputers, MODBUS/Fieldbus Products, Peripherals • 5. MODBUS/RTU CONNECTION

The number of channels and the functions that can be used differ depending on the GOT to be used.
The table below shows the allowable combinations of connection types, the number of channels and restricted functions.
○: Allowed △: Restricted

Item	Allowable combination of connection types	GOT to be used	Functions that are restricted by the connection type*1	
		GS21	FA transparent function	
			USB	Ethernet
(a)	• Ethernet connection: 1 to 2 channels • Serial connection: 1 to 2 channels	Max. 2 channels	○	△*2
(b)	• Serial connection: 2 channels	Max. 2 channels	○	△*2

*1 When the functions below are used, the connectable number of channels may be restricted depending on the combination of the functions to be used.
• Barcode function • RFID function
For details, refer to the following.
☞ Page 1110 Determining the GOT side interface (Interface selection)

*2 When a GOT and PLC are connected by Ethernet connection, connecting a GOT and a personal computer by Ethernet is not allowed.

Determining the channel No.

■Channel No. of PLC, motion controller, temperature controller, inverter, servo amplifier, CNC, robot controller

After determining the connection type to be used, determine the channel Nos. (CH No. 1 to CH No. 4) to be used for the respective connection types.

There are no special cautions to be attended to for determining channel Nos.

Set the channel No. by selecting [Common] → [Controller Setting] from the menu.

☞ Page 37 Setting connected equipment (Channel setting)

■Channel No. of external devices (barcode reader, RFID controller, personal computer and serial printer)

When connecting a barcode reader, RFID controller, or personal computer, select the channel No. (No. 5 to No. 8) for each external device.

- Number of external devices that can be connected to the GOT

One barcode reader, RFID controller, or personal computer can be connected to one GOT.

One driver must be set for one channel No. (No. 5 to No. 8) in the communication settings.

- Operator authentication (external authentication)

When using the operator authentication (external authentication), the RFID controller is available for the channel No. 8 only.

- External devices that requires the power supply from the GOT

When using the barcode reader or RFID controller that requires the power supply from the GOT, set the channel No.8.

When the channel No.5 to No.7 is set, the GOT cannot supply the power.

Write Check Sheet

Write down the following items selected in this section to the check sheet.

① Selection of connection type

Write down the name of connection type to be used.

■1. Check sheet No.1 (selection of connection type and interface)

(1) Channel No. of PLC, motion controller CPU, temperature controller, inverter, servo amplifier, CNC, robot controller (No.1 to No.4)

CH No.	① Selection of connection type	② Selection of interface (communication unit)
1	Connection name Bus(Q)	GT15-QBUS2
2	Connection name OMRON PLC	Ethernet interface built in the GOT
3	Connection name OMRON temp.	RS-422/485 interface built in the GOT
4	Connection name Servo amplifier	GT15-RS2-9P

(2) Channel No. of barcode reader, RFID controller, personal computer (CH No. 5 to 8)

CH No.	① Selection of connection type	② Selection of interface (communication unit)
5	Connection name Barcode reader	GT15-RS2-9P
6	Connection name	
7	Connection name	
8	Connection name RFID controller connection	RS-232 interface built in the GOT

Determining the GOT side interface (Interface selection)

To use the multi-channel function, add interfaces to the GOT with the following methods if required.

- Install communication units on the extension interfaces.
- Use communication units installed on the extension interfaces with the RS-232 interface, the RS422/485 interface, and/or the Ethernet interface built in the GOT.

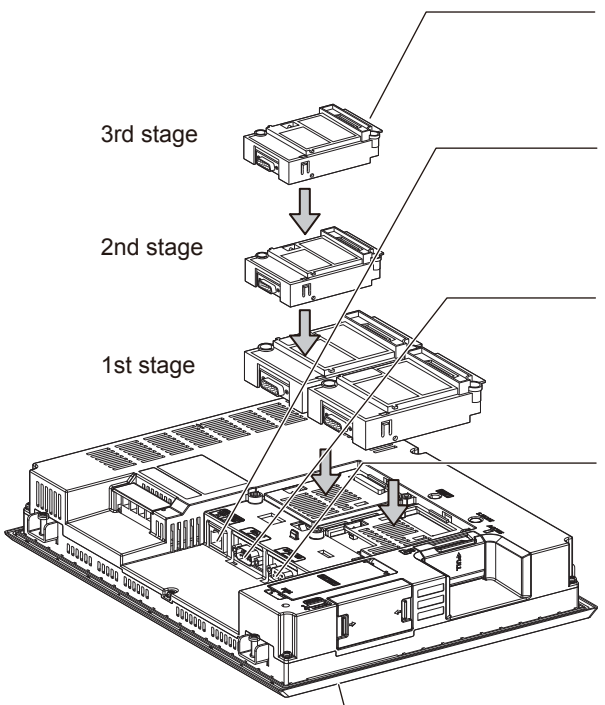

Extension interface
Extension interface allows the installation of a communication unit up to the 3rd stage. These communication units cannot be used if installed in the 4th or higher stage.

Standard interface 4
(Ethernet interface built in the GOT)
Allows controllers to be connected via Ethernet. Up to four channels can be set.

Standard interface 1
(RS-232 interface built in the GOT)
Allows a controller to be connected via the serial communication.

Standard interface 3
(RS-422/485 interface built in the GOT)
Allows a controller to be connected via the serial communication.

(Example: In the case of the GT27)

Standard interface 2
(USB interface built in the GOT)
Not used for the multi-channel function.

Select the interface to be used to enable the selected connection.

Select the interfaces according to the connection type by referring to the following.

Selected connection type	Reference for required interface and communication unit
• Bus connection	☞ Page 1112 GOT interface used for bus connection
• MELSECNET/H connection (PLC to PLC network)	☞ Page 1112 GOT interface used for network connection
• MELSECNET/10 connection (PLC to PLC network)	
• CC-Link IE Controller Network connection	
• CC-Link IE Field Network connection	
• CC-Link connection (intelligent device station)	
• CNC connection(MELSECNET/10 connection (PLC to PLC network), CC-Link connection (intelligent device station))	
• Ethernet connection	☞ Page 1112 GOT interface used for Ethernet connection
• Third party PLC connection (Ethernet connection)	
• Robot controller connection	
• CNC connection (Ethernet connection)	
• Microcomputer connection (Ethernet)	
• MODBUS/TCP connection	
• Direct CPU connection (serial)	☞ Page 1112 GOT interface used for serial connection
• Serial communication connection	
• CC-Link connection (via G4)	
• Inverter connection	
• Servo amplifier connection	
• CNC connection (serial connection)	
• GOT multi-drop connection	
• Third party PLC connection (serial connection)	
• Third party safety controller connection	
• Third party servo amplifier connection	
• Third party robot controller connection	
• Third party temperature controller connection	
• Microcomputer Connection (Serial)	
• MODBUS/RTU connection	
• Other functions	☞ Page 1113 Interfaces and option units used for other functions

GOT interface used for bus connection

For the bus connection, use the following communication units.

Interface	Model*1
Bus connection unit	GT15-75QBUS(2)L, GT15-75ABUS(2)L, GT15-QBUS(2), GT15-ABUS(2)

*1 To mount multiple units, the GT15-QBUS(2) or GT15-ABUS(2) is required.

Point

• Bus connection units to be used

GT15-QBUS(2) and GT15-ABUS(2) can be used independent of the number of serial connection channels. When using the multi-channel function for the first time, it is recommended to use GT15-QBUS(2) or GT15-ABUS(2).

• Restrictions by bus connection unit installation

For the following functions, use the GT15-QBUS(2) or GT15-ABUS(2), regardless of the number of channels used for the serial connection.

With the GT15-75QBUS(2)L or GT15-75ABUS(2)L, the following functions are not available.

Function
Remote personal computer operation (serial),Video display function,Multimedia function, External I/O function,RGB display function,Sound output function

GOT interface used for network connection

For the network connection, use the following communication units.

Interface	Model
MELSECNET/H communication unit	GT15-J71LP23-25, GT15-J71BR13
CC-Link IE Controller Network communication unit	GT15-J71GP23-SX
CC-Link IE Field Network communication unit	GT15-J71GF13-T2
CC-Link communication unit	GT15-J61BT13

GOT interface used for Ethernet connection

For the Ethernet connection, use the following interface built in the GOT.

Interface	Name
Name	Ethernet interface*1

*1 Up to four channels can be used.

GOT interface used for serial connection

For the serial connection, provide interfaces equivalent to the number of channels by using the following interfaces built in the GOT and communication units in combinations.

Interface	Name/model
Interface built in GOT	RS-232 interface*1, RS-422/485 interface
Serial communication module	GT15-RS2-9P, GT15-RS4-9S, GT15-RS4-TE

*1 The operator authentication (external authentication) or the FA transparent function (RS-232 communication) uses the RS-232 interface built in the GOT.

Interfaces and option units used for other functions

When the following functions are used in combinations, the number of available channels may vary according to the combinations of units

Function		Reference
Sound output function	External I/O function,	☞ • Report function and sound output function
Remote personal computer operation (serial), Multimedia function,	Video display function, RGB display function	☞ • Remote personal computer operation (serial), video display function, multimedia function and RGB display function
Remote personal computer operation (Ethernet), Gateway function,	Ethernet download, MES interface function	☞ • Remote personal computer operation (Ethernet), Ethernet download, and gateway function
RFID function,	Barcode function, Remote personal computer operation (serial),	☞ • Barcode function, RFID function, and remote personal computer operation (serial)

Refer to the explanation below to check if the number of channels for the multi-channel function to be used is restricted or not. If it is restricted, review the system configuration.

■Number of stages taken up by the individual functions (number of slots)

- Report function and sound output function

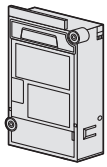

The printer unit, sound output unit, or external I/O unit is required depending on the function to be used.
Each unit uses one stage (one slot) of an extension interface.

- Remote personal computer operation (serial), video display function, multimedia function and RGB display function

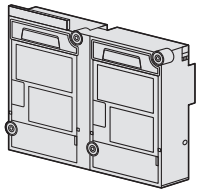

A video input unit, an RGB input unit, a video/RGB input unit, an RGB output unit or a multimedia unit is required corresponding to the function to be used.
Each type of unit uses 1 stage (2 slots) of extension interface.
Only one piece of each type of unit can be installed on a GOT.

- Remote personal computer operation (Ethernet), Ethernet download, and gateway function

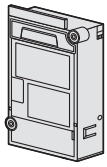

Use the interface built in the GOT.
The Ethernet communication unit is not applicable.

- Barcode function, RFID function, and remote personal computer operation (serial)

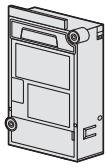

Use the interface built in the GOT or a serial communication unit.
A serial communication unit uses 1 stage (1 slot) of extension interface.

Write Check Sheet

Write down the following items selected in this section to the check sheet.

② Selection of interface (communication unit)

Write down the name of interface and the model name of communication unit to be used for each of the connection type.

■1. Check sheet No.1 (selection of connection type and interface)

(1) Channel No. of PLC, motion controller CPU, temperature controller, inverter, servo amplifier, CNC, robot controller (No.1 to No.4)

CH No.	① Selection of connection type	② Selection of interface (communication unit)
1	Connection name Bus(Q)	GT15-QBUS2
2	Connection name OMRON PLC	Ethernet interface built in the GOT
3	Connection name OMRON temp.	RS-422/485 interface built in the GOT
4	Connection name Servo amplifier	GT15-RS2-9P

(2) Channel No. of barcode reader, RFID controller, personal computer (CH No. 5 to 8)

CH No.	① Selection of connection type	② Selection of interface (communication unit)
5	Connection name Barcode reader	GT15-RS2-9P
6	Connection name	
7	Connection name	
8	Connection name RFID controller connection	RS-232 interface built in the GOT

Write Check Sheet

Write down the following items to the check sheet.

③ Attaching the communication unit

1. Write down the name of communication unit to be used for each of the connection type.

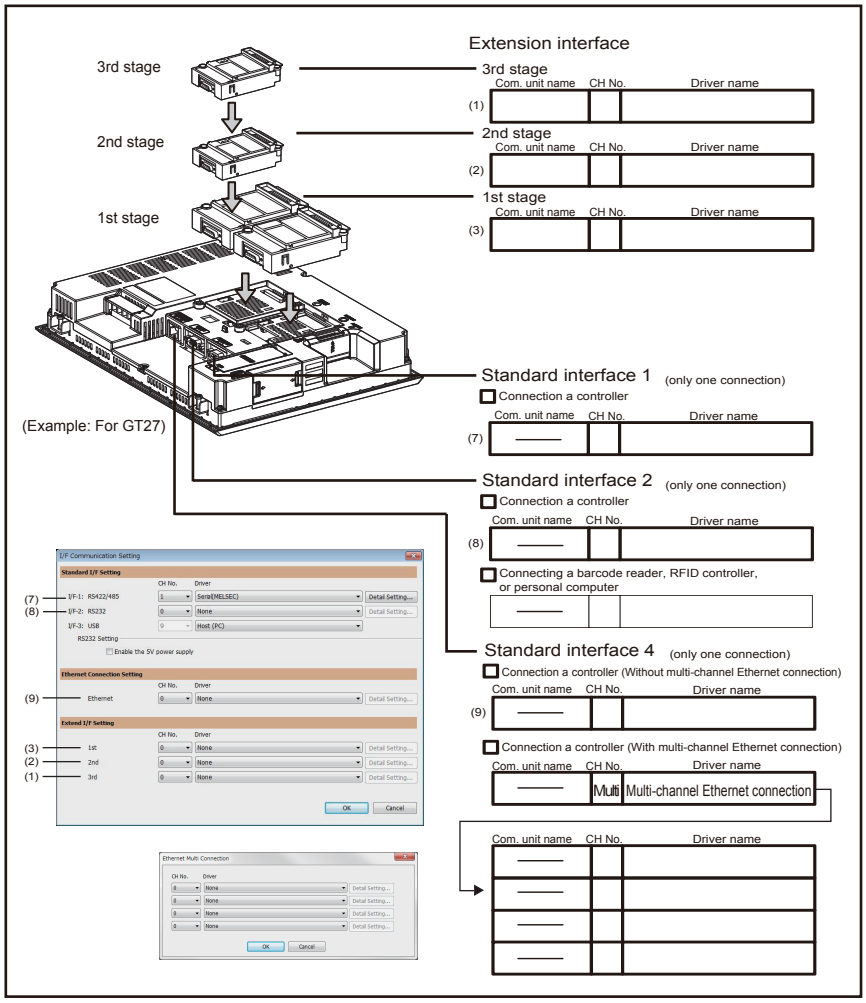

22

2. After writing down the names of communication units, write down CH No. to be assigned to respective units based on the entry in ■ Check Sheet No. 1 (selection of connection type and interface).

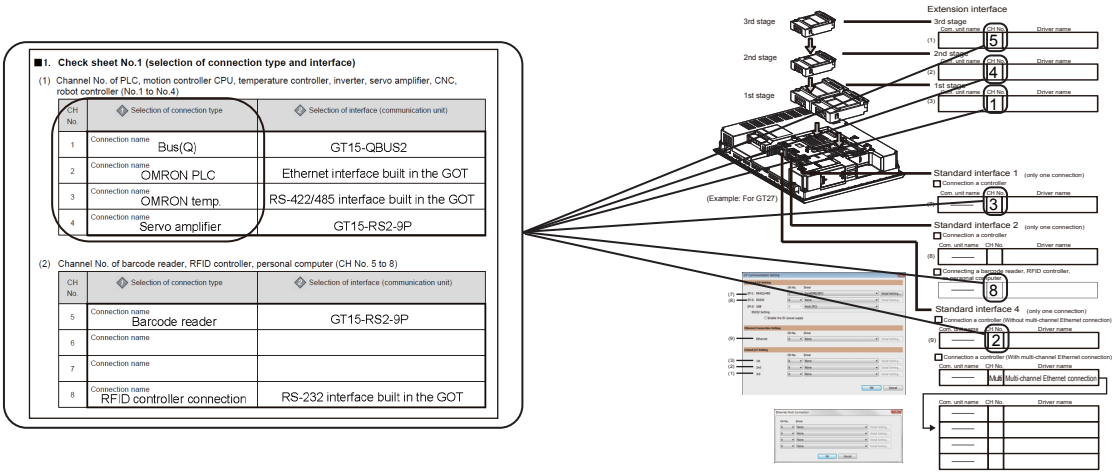

3. After writing down CH No., write down the communication driver name for each connection type. For the communication drivers used for the respective connection types, refer to the following.

➡ Chapters of each respective connection type

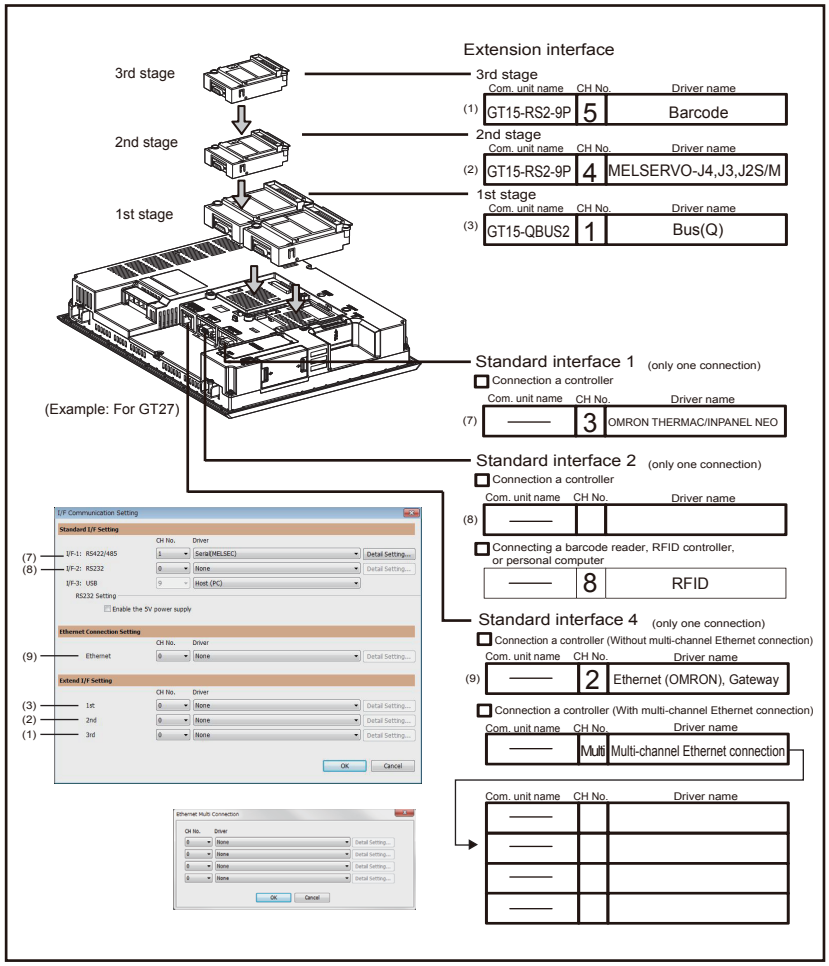

Setting for communication settings

Make communication settings based on the interface and the installation position of the respective communication units.

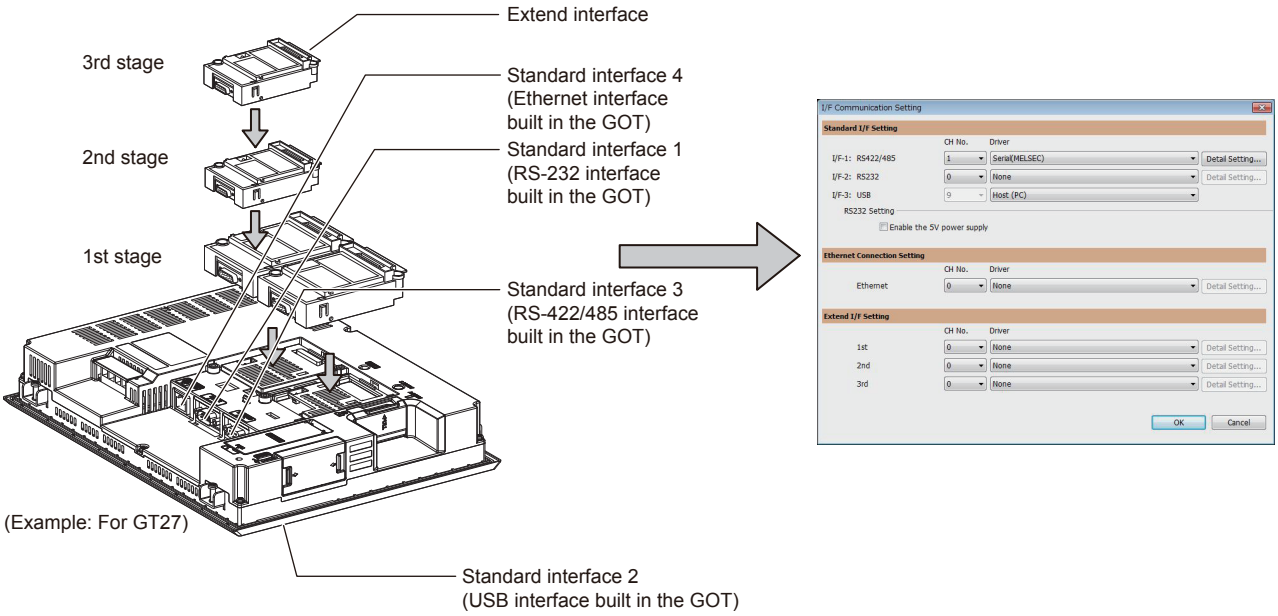

Check

Make settings for Communication Settings by GT Designer3 referring to the check sheet where the necessary information has been written.
The positions that the settings should be made on the communication settings screen are specified on the check sheet by numbers.

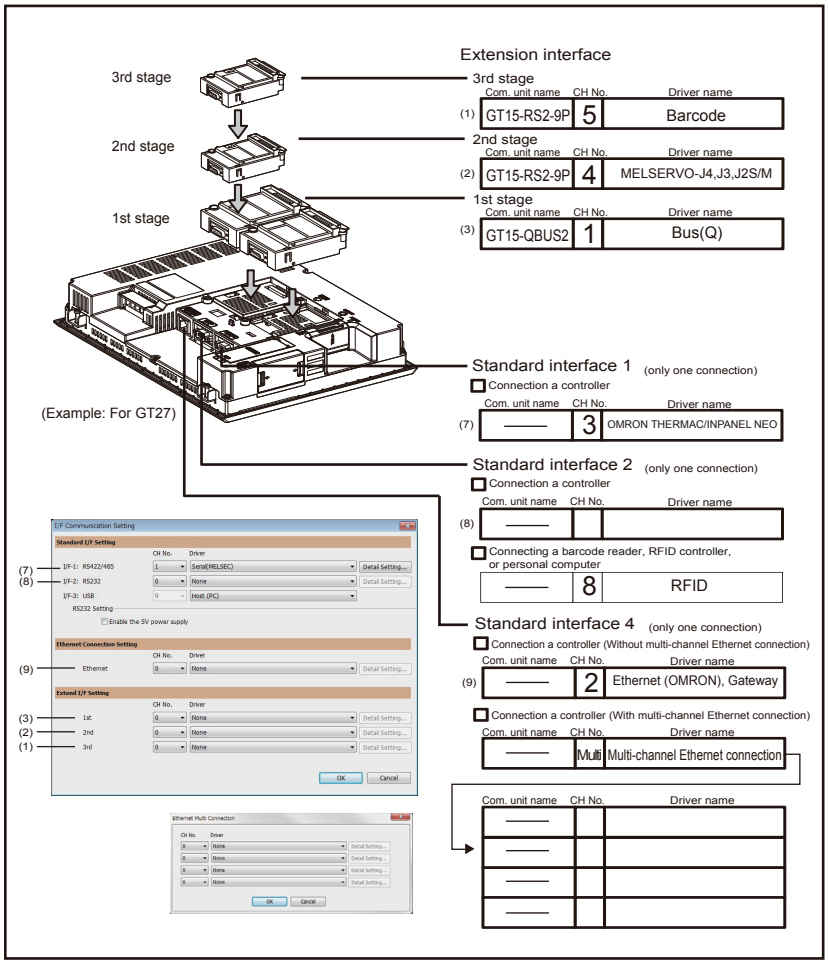

This completes the setting for Communication Settings.
Create a screen with GT Designer3.

Example: Setting example for "Bus connection (1 channel) + Serial connection (3 channels) + Bar code reader"

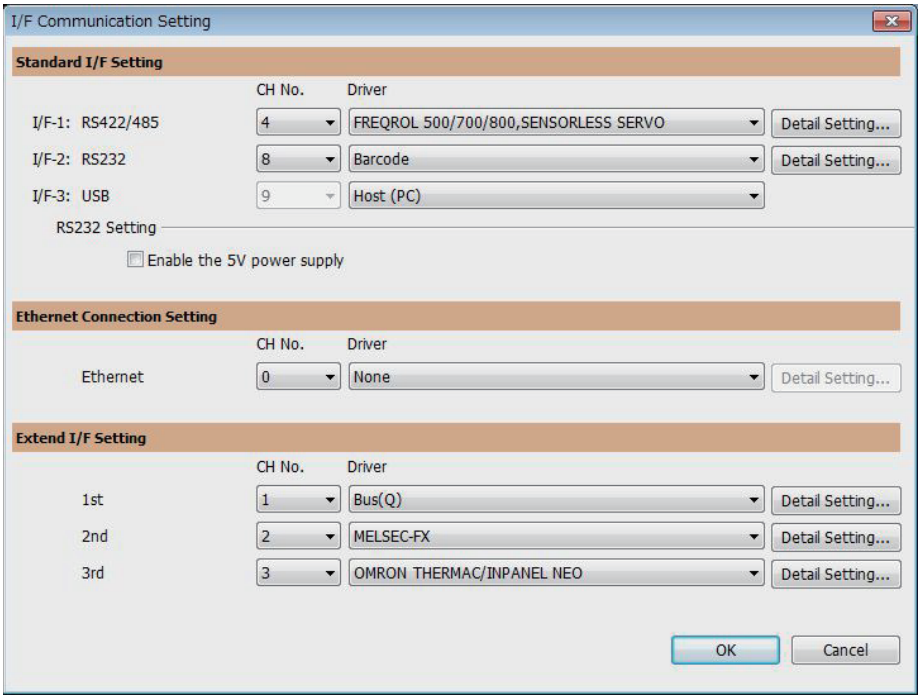

Example: Setting example for "MELSECNET/H connection (1 channel) + Serial connection (1 channel)"

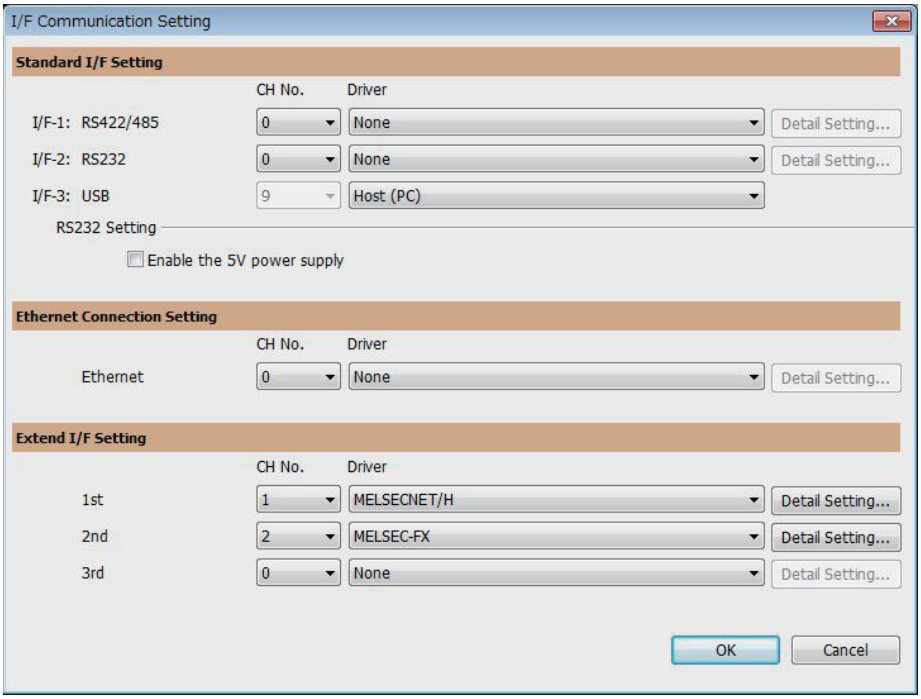

Example: Setting example for Ethernet connection (4 channels)

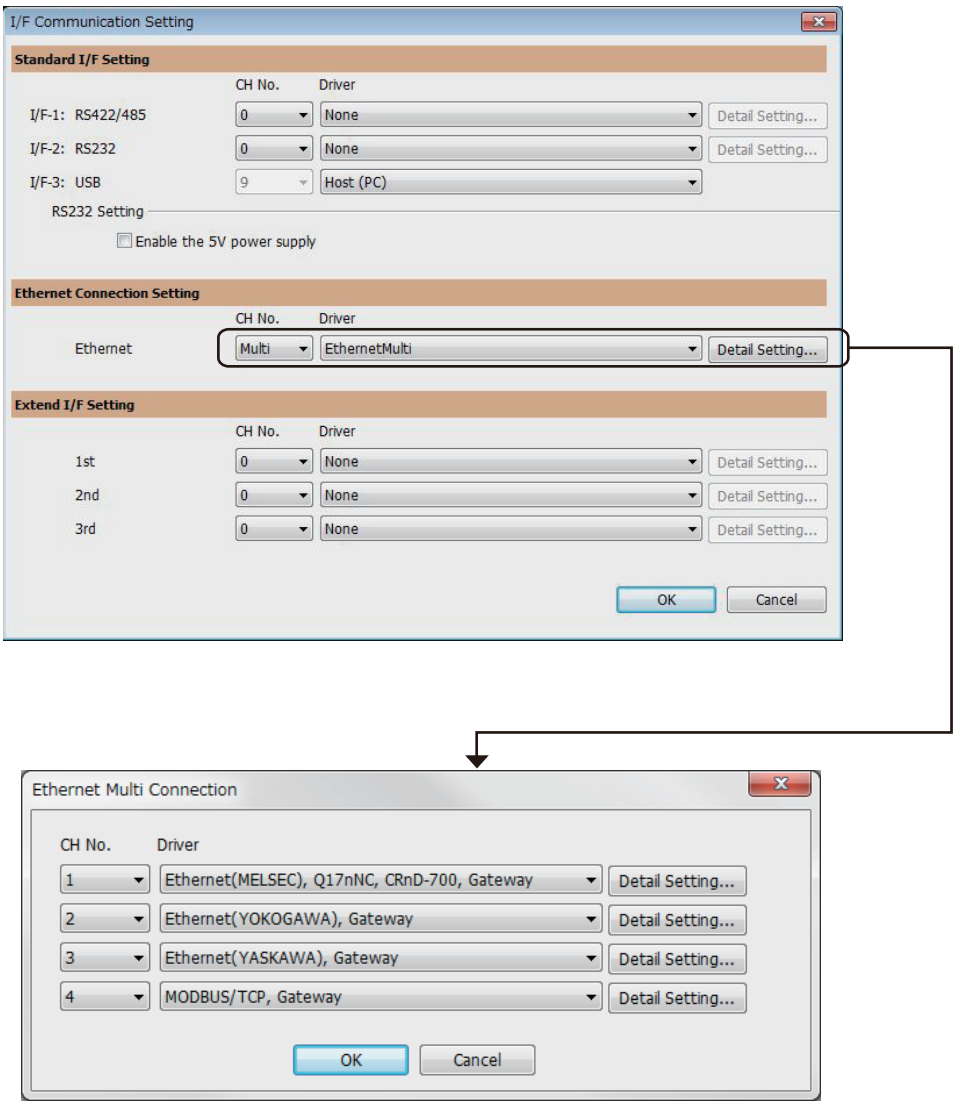

Items to be checked before starting drawing

The following describes that should be understood before starting drawing and the functions that should be set beforehand when using the multi-channel function.

Device settings

It is necessary to set the device to be used together with the CH No.

📖GT Designer3 (GOT2000) Screen Design Manual

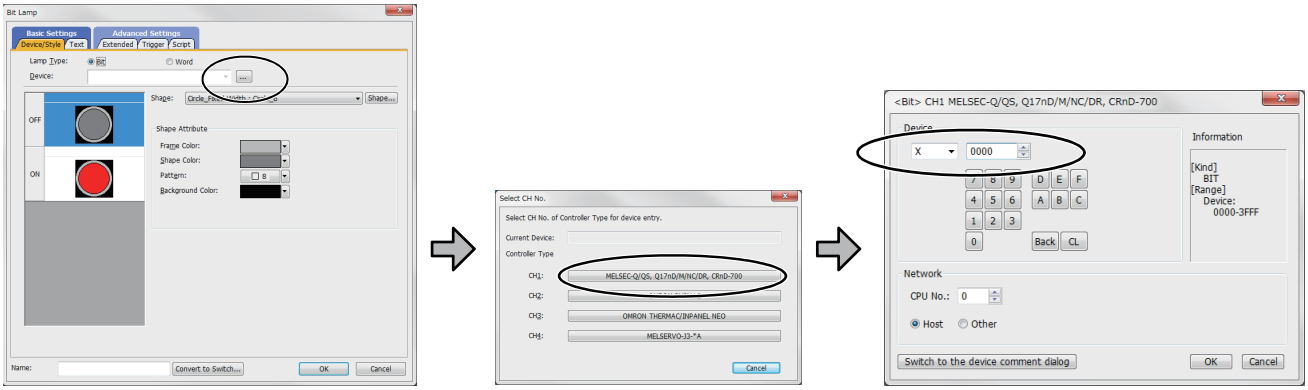

1. Click the device setting button.
2. Click the controller to be set.
3. Set the device.

Accessible range for monitoring

The accessible range for monitoring is not changed even when the multi-channel function is used.

☞ Page 92 ACCESS RANGE FOR MONITORING

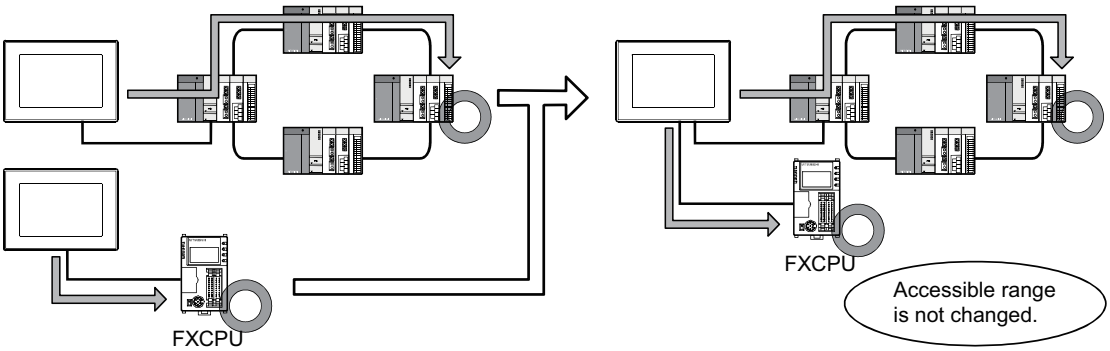

Clock function

Set the controller for which adjust/broadcast should be executed by the CH No.

GT Designer3 (GOT2000) Screen Design Manual

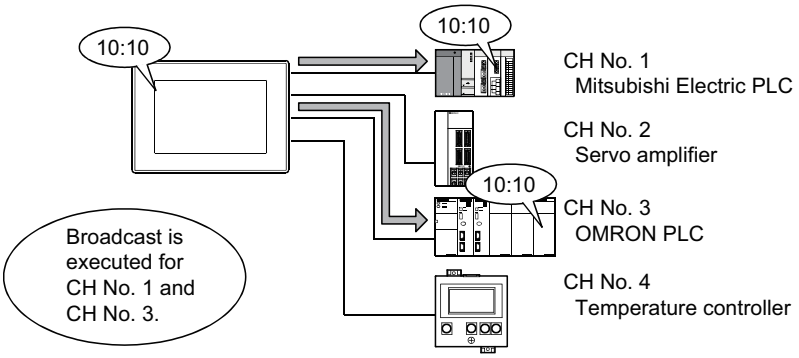

FA transparent function

Set the controller for which the FA transparent function should be executed by the CH No.

Page 1061 Setting communication interface (Controller Setting)

The set CH No. can be changed by the Utility.

To execute the FA transparent function for other CH No., change the CH No. using the Utility.

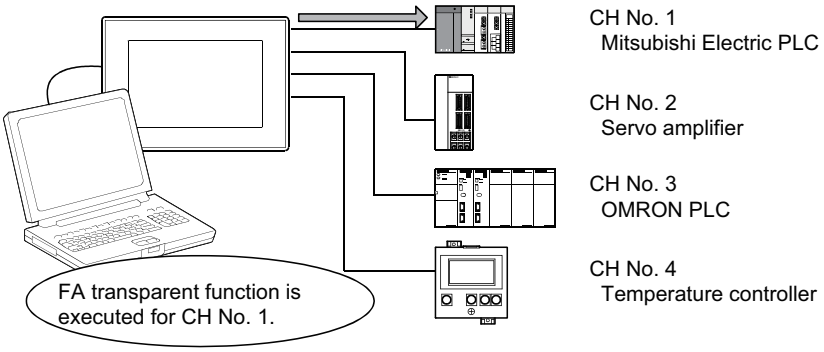

Station No. switching function

Set the controller for which the station No. switching function should be executed by the CH No.

GT Designer3 (GOT2000) Screen Design Manual

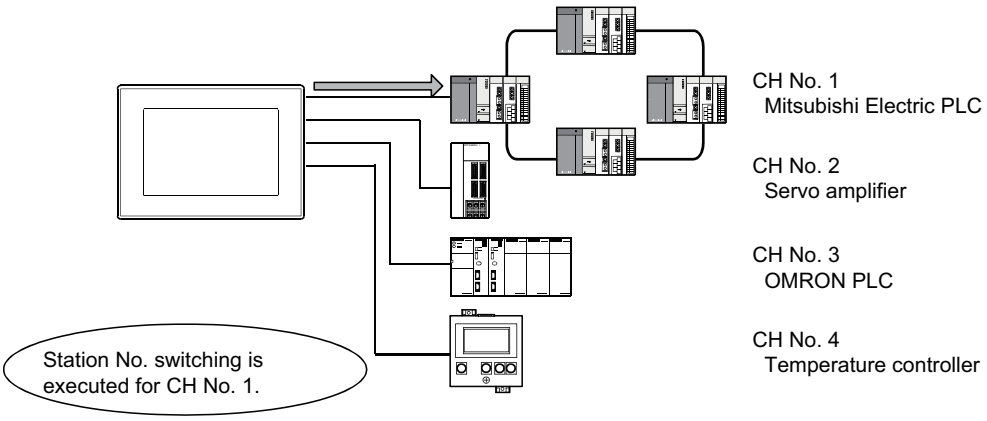

22.4 Precautions

Precautions for use

Occurrence of the same system alarm at different channels

When the advanced system alarm is used, if the system alarms with the same error code occur in different channels the GOT treats the alarms as the same system alarm.
Therefore, if the system alarms with the same error code occur one by one, the time of later system alarm occurrence is not reflected to the GOT.

Confirmation of the channel No. at which a system alarm occurred

When a system alarm occurred, confirm the channel No. where the alarm occurred, using the procedure indicated below.

■Check by [System alarm display] of the utility.

📖GOT2000 Series User's Manual (Utility)

■Monitor the internal devices of the GOT.

📖GT Designer3 (GOT2000) Screen Design Manual

22.5 Multi-channel Function Check Sheet

This section provides the check sheet to be used for Communication Settings when the multi-channel function is used.
Sections 20.3.3 to 20.3.5 contain explanations of the items to be checked on the check sheet.
Checking items explained in these sections using the check sheet on the following page allows you to complete the setting for the multi-channel function.

Write Check Sheet

Enter the selections having been made in the steps above to the check sheet.

Shows items and contents to be written on the check sheet. Also describes an example of the check sheet.

①Selection of connection type

Enter the name of connection type to be used.

■1. Check sheet No.1 (selection of connection type and interface)

(1) Channel No. of PLC, motion controller CPU, temperature controller, inverter, servo amplifier, CNC, robot controller (No.1 to No.4)

CH No.	① Selection of connection type	② Selection of interface (communication unit)
1	Connection name Bus(Q)	GT15-QBUS2
2	Connection name OMRON PLC	Ethernet interface built in the GOT
3	Connection name OMRON temp.	RS-422/485 interface built in the GOT
4	Connection name Servo amplifier	GT15-RS2-9P

(2) Channel No. of barcode reader, RFID controller, personal computer (CH No. 5 to 8)

CH No.	① Selection of connection type	② Selection of interface (communication unit)
5	Connection name Barcode reader	GT15-RS2-9P
6	Connection name	
7	Connection name	
8	Connection name RFID controller connection	RS-232 interface built in the GOT

The following symbols are used for each purpose.

Write Check Sheet

Indicates parts where items and details are to be written.
Confirm the details and write them to the check sheet.

Check

Indicates parts where written details are to be checked.
Confirm the details and perform the Communication Settings.

Check sheet No.1 (selection of connection type and interface)

(1) Channel No. of PLC, motion controller CPU, temperature controller, inverter, servo amplifier, CNC, robot controller (No.1 to No.4)

CH No.	1 Selection of connection type	2 Selection of interface (communication unit)
1	Connection name	
2	Connection name	
3	Connection name	
4	Connection name	

(2) Channel No. of barcode reader, RFID controller, personal computer (CH No. 5 to 8)

CH No.	1 Selection of connection type	2 Selection of interface (communication unit)
5	Connection name	
6	Connection name	
7	Connection name	
8	Connection name	

Check sheet No. 2 (selection of GOT side interface)

③ Attaching the communication unit

☞ Page 62 Precautions when installing units on top of one another

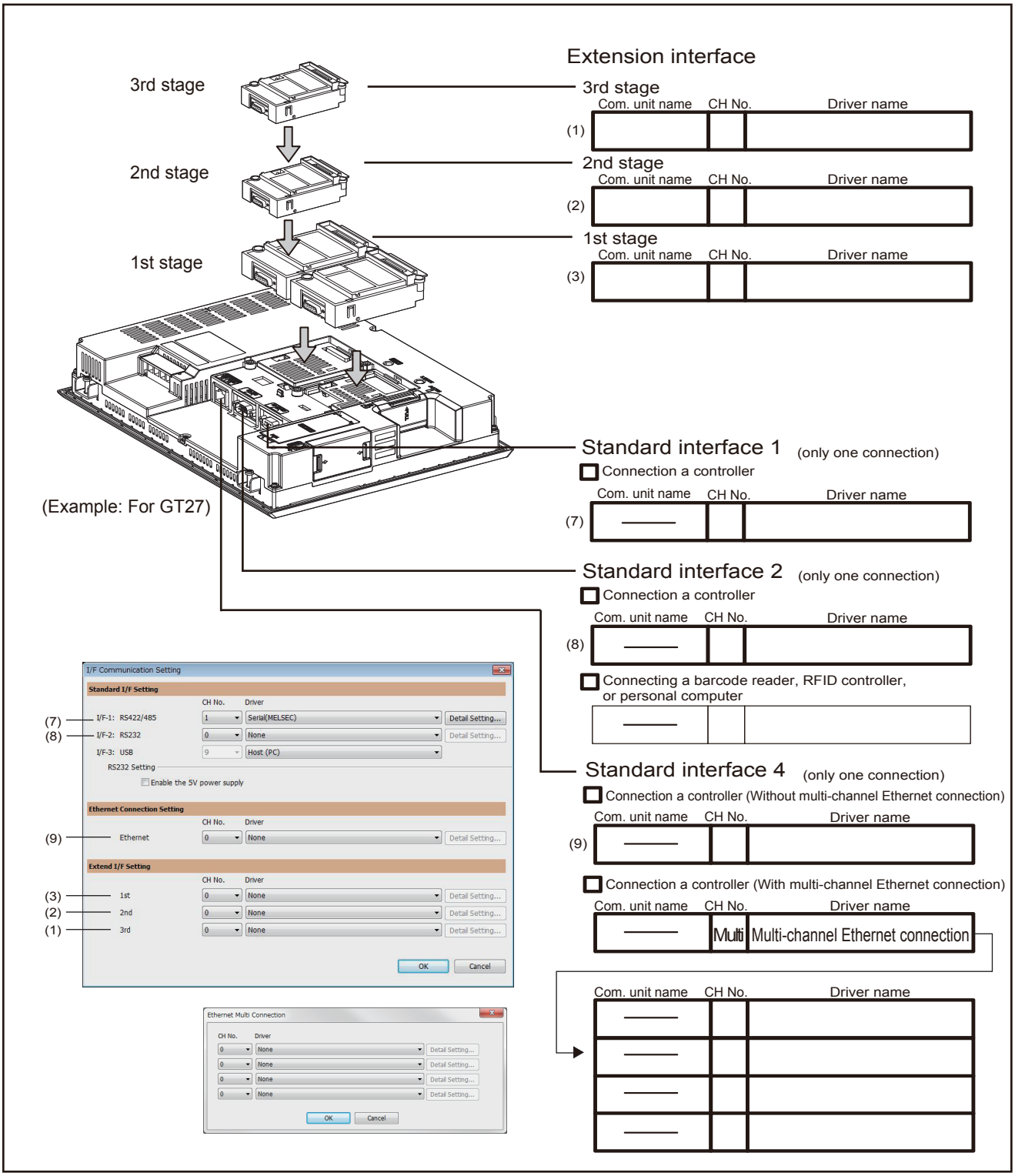

MEMO

PART 6 FA TRANSPARENT

23 FA TRANSPARENT FUNCTION

23 FA TRANSPARENT FUNCTION

- Page 1128 FA Transparent Function
- Page 1129 Compatible Software
- Page 1141 List of Models that Can Be Monitored
- Page 1192 System Configuration
- Page 1214 Connection Diagram
- Page 1215 GOT Side Settings
- Page 1219 Personal Computer Side Setting
- Page 1376 Precautions

23.1 FA Transparent Function

The FA transparent function allows the programs of the Mitsubishi Electric PLC to be read, written, and monitored via a GOT connected to a personal computer with the GOT and the PLC connected.

Example) When the sequence programs are read from, written to, and monitored from the Mitsubishi Electric PLC through a GOT

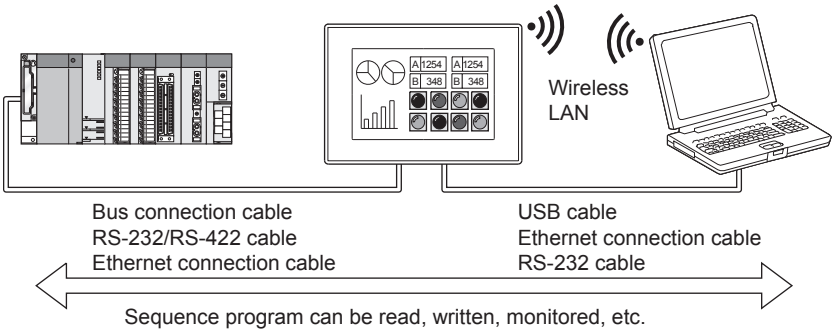

23.2 Compatible Software

The following shows the software compatible with the FA transparent function.

Point

• The range accessible by software when FA transparent function is used

Use of the FA transparent function does not affect the range accessible by the software.

For details on accessible range, refer to the manual for the respective software.

• The software settings when using FA transparent function

For the software settings, refer to the following when using FA transparent function.

☞ Page 1219 Accessing by GX Works3
☞ Page 1257 Accessing by CW Configurator
☞ Page 1275 Accessing the PLC by the PX Developer, GX Configurator
☞ Page 1282 Accessing by GX Works2
☞ Page 1310 Accessing by GX LogViewer
☞ Page 1311 Accessing PLC by GX Configurator-QP
☞ Page 1313 Accessing by the MT Developer
☞ Page 1315 Accessing by the MT Works2
☞ Page 1326 Accessing the servo amplifier by the MR Configurator
☞ Page 1326 Accessing the servo amplifier by the MR Configurator2
☞ Page 1327 Accessing the inverter by the FR Configurator
☞ Page 1328 Accessing the inverter by the FR Configurator2
☞ Page 1336 Accessing PLC by FX Configurator-FP
☞ Page 1337 Accessing by FX Configurator-EN-L or FX Configurator-EN
☞ Page 1338 Accessing by RT ToolBox3
☞ Page 1351 Accessing by RT ToolBox2
☞ Page 1355 Accessing by NC Configurator2
☞ Page 1356 Accessing by MELSOFT Navigator
☞ Page 1357 Accessing by CPU Module Logging Configuration Tool
☞ Page 1360 Accessing by Setting/ Monitoring tool for C Controller module
☞ Page 1364 Accessing by MX Component (MX Sheet)
☞ Page 1369 Accessing by MI Configurator

When connecting the GOT and the personal computer by USB

■When connecting the GOT and controller using the bus connection

The following shows the software and the accessible controllers.

Controller	Software	Applicable version
QCPU (Q mode), C Controller module (Q series)	MELSOFT Navigator	1.71Z or later
	GX Works2	1.497T or later
	PX Developer	1.40S or later
	GX Developer	8.118Y or later
	MX Component	4.05F or later
	MX Sheet	*1
	Setting/monitoring tool for C Controller module	4.04E or later
	GX LogViewer	1.32J or later
	CPU Module Logging Configuration Tool	1.32J or later
QCPU (A Mode), QnA/ACPU, Motion CPU (A series)	GX Developer	8.118Y or later
	MX Component	4.05F or later
	MX Sheet	*1
Motion CPU (Q series)	MELSOFT Navigator	1.71Z or later
	MT Works2	1.66U or later
	MX Component	4.05F or later
	MX Sheet	*1
CNC CPU (Q173NCCPU)	NC Configurator2	B0 or later
Robot controller (CRnQ-700)	RT ToolBox2	3.00 or later
	RT ToolBox3	From the first version
CR800-Q (Q172DSRCPU)	RT ToolBox3	1.20W or later
MELSERVO (MR-J3-B)*3	MR Configurator2*2	1.23Z or later
MELSERVO (MR-J4-B)*3	MR Configurator2*2	1.23Z or later

*1 Use MX Component (Version 4.05F or later) for MX Sheet.
*2 Start MR Configurator2 with MT Developer2 Version 1.66U or later.
*3 A Motion controller is required between the GOT and controller in the bus connection.

■When connecting the GOT and controller using the direct CPU connection (serial)

The following shows the software and the accessible controllers.

Controller		Software	Applicable version
FX5U, FX5UC		GX Works3	1.005F or later
		MX Component	4.11M or later
		MX Sheet	*5
FX5UJ		GX Works3	1.060N or later
FX5S		GX Works3	1.080J or later
QCPU (Q mode)		MELSOFT Navigator	1.71Z or later
		GX Works2	1.497T or later
		PX Developer	1.40S or later
		GX Developer	8.118Y or later
		MX Component	4.05F or later
		MX Sheet	*1
		GX LogViewer	1.32J or later
		CPU Module Logging Configuration Tool	1.32J or later
LCPU*2		MELSOFT Navigator	1.71Z or later
		GX Works2	1.497T or later
		GX Developer	8.118Y or later
		MX Component	4.05F or later
		MX Sheet	*1
		GX LogViewer	1.32J or later
		CPU Module Logging Configuration Tool	1.32J or later
QCPU (A Mode), QnA/ACPU, Motion CPU (A series)		GX Developer	8.118Y or later
		MX Component	4.05F or later
		MX Sheet	*1
FXCPU		MELSOFT Navigator	1.71Z or later
		GX Works2	1.497T or later
		GX Developer	8.118Y or later
		MX Component	4.05F or later
		MX Sheet	*1
Motion CPU (Q series)		MELSOFT Navigator	1.71Z or later
		MT Works2	1.66U or later
		MX Component	4.05F or later
		MX Sheet	*1
FR-A700 series		FR Configurator	3.00
FR-F700 series		FR Configurator	3.00
FR-E700 series		FR Configurator	3.00
FR-D700 series		FR Configurator	3.00
FR-A800 and FR-F800 series		FR Configurator2	From the first version
FR-A800 Plus series	FR-A800-CRN FR-A800-E-CRN FR-A800-R2R FR-A800-E-R2R	FR Configurator2	1.16S or later
	FR-A800-LC FR-A800-E-LC	FR Configurator2	1.19V or later
FR-E800 series		FR Configurator2	1.19V or later
Robot controller (CRnQ-700)		RT ToolBox2	3.00 or later
		RT ToolBox3	From the first version
CR800-Q (Q172DSRCPU)		RT ToolBox3	1.20W or later
MELSERVO (MR-J3-B)*4		MR Configurator2*3	1.24A or later
MELSERVO (MR-J4-B)*4		MR Configurator2*3	1.24A or later

*1 Use MX Component (Version 4.05F or later) for MX Sheet.
*2 An adapter (L6ADP-R2 or L6ADP-R4) is required to use an LCPU other than the following.
• L02SCPU
• L02SCPU-P
When using L6ADP-R4, use an LCPU having a serial number starting with 15102 or later.
*3 Start MR Configurator2 with MT Developer2 Version 1.66U or later.
*4 A Motion controller is required between the GOT and controller in the direct CPU connection (serial).
*5 Use MX Component (Version 4.11M or later) for MX Sheet.

■When connecting the GOT and controller using the serial communication connection

The following shows the software and the accessible controllers.

Controller	Software	Applicable version
RCPU	GX Works3	• RCPU redundant system: 1.030G or later • Other than the above: From the first version
	MX Component	4.06G or later
	MX Sheet	*2
	CPU Module Logging Configuration Tool	1.142Y or later
Motion CPU (MELSEC iQ-R series)	MX Component	4.06G or later
	MX Sheet	*1
C Controller module (MELSEC iQ-R series)	CW Configurator	1.013P or later
MELSECWinCPU (MELSEC iQ-R series)	CW Configurator	1.013P or later
QCPU (Q mode)	MELSOFT Navigator	1.71Z or later
	GX Works2	1.497T or later
	PX Developer	1.40S or later
	GX Developer	8.118Y or later
	MX Component	4.05F or later
	MX Sheet	*1
	GX LogViewer	1.32J or later
	CPU Module Logging Configuration Tool	1.32J or later
LCPU	MELSOFT Navigator	1.71Z or later
	GX Works2	1.497T or later
	GX Developer	8.118Y or later
	MX Component	4.05F or later
	MX Sheet	*1
	GX LogViewer	1.32J or later
	CPU Module Logging Configuration Tool	1.32J or later

*1 Use MX Component (Version 4.05F or later) for MX Sheet.
*2 Use MX Component (Version 4.06G or later) for MX Sheet.

■When connecting the GOT and controller using the Ethernet connection

The following shows the software and the accessible controllers.

Controller		Software	Applicable version
RCPU		GX Works3	• RCPU redundant system: 1.030G or later • Other than the above: From the first version
		MX Component	4.06G or later
		MX Sheet	*5
		CPU Module Logging Configuration Tool	1.142Y or later
Motion CPU (MELSEC iQ-R series)		MT Works2	1.100E or later
		MX Component	4.06G or later
		MX Sheet	*5
C Controller module (MELSEC iQ-R series)		CW Configurator	From the first version
MELSECWinCPU (MELSEC iQ-R series)		CW Configurator	1.013P or later
Robot controller (CR800-R, CR800-D)		RT ToolBox3	From the first version
FX5U, FX5UC		GX Works3	• When using FX5-ENET or FX5-ENET/IP: 1.075D or later • Other than the above: 1.005F or later
		MX Component	• When using FX5-ENET or FX5-ENET/IP: Not available • Other than the above: 4.11M or later
		MX Sheet	• When using FX5-ENET or FX5-ENET/IP: Not available • Other than the above: *6
FX5UJ		GX Works3	1.060N or later
FX5S		GX Works3	1.080J or later
QCPU (Q mode), C Controller module (Q series)		MELSOFT Navigator	1.71Z or later
		GX Works2*1	1.497T or later (Same when using the CC-Link IE Field Network Ethernet adapter (NZ2GF-ETB))
		GX Developer	8.118Y or later
		MX Component	4.05F or later
		MX Sheet	*2
		Setting/monitoring tool for C Controller module	4.04E or later
		GX LogViewer	1.32J or later
		CPU Module Logging Configuration Tool	1.32J or later
LCPU		MELSOFT Navigator	1.71Z or later
		GX Works2	1.497T or later
		GX Developer	8.118Y or later
		MX Component	4.05F or later
		MX Sheet	*2
		GX LogViewer	1.32J or later
		CPU Module Logging Configuration Tool	1.32J or later
FXCPU		GX Works2	1.497T or later
		MX Component	4.05F or later
		MX Sheet	*2
QCPU (A Mode), QnA/ACPU		GX Developer	8.118Y or later
		MX Component	4.05F or later
		MX Sheet	*2
Motion CPU (Q series)		MELSOFT Navigator	1.71Z or later
		MT Works2	1.66U or later
CNC CPU (Q173NCCPU)		NC Configurator2	B0 or later
FR-E700 (FR-E7□0-NE), FR-A800, and FR-F800 series		FR Configurator2	• Through the Ethernet port built in the RCPU: 1.16S or later • Other than the above: 1.15R or later
FR-A800 Plus series	FR-A800-E-CRN FR-A800-E-R2R	FR Configurator2	1.16S or later
	FR-A800-E-LC	FR Configurator2	1.19V or later

Controller	Software	Applicable version
FR-E800 series	FR Configurator2	1.19V or later
Robot controller (CRnQ-700, CRnD-700)	RT ToolBox2	3.00 or later
	RT ToolBox3	From the first version
CR800-Q (Q172DSRCPU)	RT ToolBox3	1.20W or later
MELSERVO (MR-J3-B) *4	MR Configurator2*3	1.23Z or later
MELSERVO (MR-J4-B) *4	MR Configurator2*3	1.23Z or later
MELIPC	MI Configurator	From the first version

*1 C controller module (Q series) does not support CC-Link IE Field Network.
*2 Use MX Component (Version 4.05F or later) for MX Sheet.
*3 Start MR Configurator2 with MT Developer2 Version 1.66U or later.
*4 A Motion controller is required between the GOT and controller in the Ethernet connection.
*5 Use MX Component (Version 4.06G or later) for MX Sheet.
*6 Use MX Component (Version 4.11M or later) for MX Sheet.

■When connecting the GOT and controller using the CC-Link IE Controller Network connection

The following shows the software and the accessible controllers.

Controller	Software	Applicable version
RCPU	GX Works3	• RCPU redundant system: 1.030G or later • Other than the above: 1.025B or later
	CPU Module Logging Configuration Tool	1.142Y or later
C Controller module (MELSEC iQ-R series)	CW Configurator	1.013P or later
MELSECWinCPU (MELSEC iQ-R series)	CW Configurator	1.013P or later
QCPU (Q mode), C Controller module (Q series)	GX Works2	1.525X or later
Motion CPU (Q series) (Q170MCPU, Q170MSCPU, and Q170MSCPU-S1 only)	GX Works2	1.525X or later

■When connecting the GOT and controller using the CC-Link IE Field Network connection

The following shows the software and the accessible controllers.

Controller	Software	Applicable version
RCPU	GX Works3	1.030G or later (Same for the RCPU redundant system)
	CPU Module Logging Configuration Tool	1.142Y or later
C Controller module (MELSEC iQ-R series)	CW Configurator	1.013P or later
FX5U, FX5UC	GX Works3	1.035M or later
FX5UJ	GX Works3	1.060N or later
QCPU (Q mode)	GX Works2	1.545T or later
Motion CPU (Q series) (Q170MCPU, Q170MSCPU, and Q170MSCPU-S1 only)	GX Works2	1.545T or later
LCPU	GX Works2	1.545T or later

■When connecting the GOT and controller using the CC-Link IE TSN connection

The following shows the software and the accessible controllers.

Controller	Software	Applicable version
RCPU	GX Works3	1.080J or later
	CPU Module Logging Configuration Tool	1.142Y or later

When connecting the GOT and the personal computer using the RS-232 connection

■When connecting the GOT and controller using the direct CPU connection (serial)

The following shows the software and the accessible controllers.

Controller	Software	Applicable version
FX5U, FX5UC	GX Works3	1.005F or later
	MX Component	4.11M or later
	MX Sheet	*5
QCPU (Q mode)	MELSOFT Navigator	1.04E or later
	GX Developer	8.118Y or later
	GX Works2	1.03D or later
	MX Component	4.00A or later
	MX Sheet	*3
LCPU*2	MELSOFT Navigator	1.07H or later
	GX Developer	8.118Y or later
	GX Works2	1.11M or later
	GX LogViewer	From the first version
	MX Component	4.00A or later
	MX Sheet	*3
	CPU Module Logging Configuration Tool	1.04E or later
QCPU (A Mode), QnA/ACPU	GX Developer	8.118Y or later
	MX Component	4.00A or later
	MX Sheet	*3
FXCPU	MELSOFT Navigator	1.04E or later
	GX Developer	8.118Y or later
	GX Works2	1.03D or later
	FX-PCS/WIN*1	From the first version
	FX Configurator-FP	1.30 or later
	FX Configurator-EN-L	From the first version
	FX Configurator-EN	From the first version
	MX Component	4.00A or later
	MX Sheet	*3
Motion CPU (Q series)	MELSOFT Navigator	1.04E or later
	MT Developer	From the first version
	SW6RN-GSV13P, SW6RN-GSV22P, SW6RN-GSV43P, SW6RN-GSV54P, SW6RN-DOSCP, SW6RN-SNETP (for user APIs)	From the first version
	MT Works2	1.00A or later
	MX Component	4.00A or later
	MX Sheet	*4
Robot controller (CRnQ-700)	RT ToolBox2	3.00 or later
	RT ToolBox3	From the first version

*1 The RS-232/USB conversion adaptor (GT10-RS2TUSB-5S) is not compatible with FX-PCS/WIN.
*2 An adapter (L6ADP-R2 or L6ADP-R4) is required to use an LCPU other than the following.
- L02SCPU
- L02SCPU-P

When using L6ADP-R4, use an LCPU having a serial number starting with 15102 or later.
*3 Use MX Component (Version 3.14Q or later) for MX Sheet.
*4 Use MX Component (Version 4.00A or later) for MX Sheet.
*5 Use MX Component (Version 4.11M or later) for MX Sheet.

■When connecting the GOT and controller using the serial communication connection

The following shows the software and the accessible controllers.

Controller	Software	Applicable version
RCPU	GX Works3	• RCPU redundant system: 1.030G or later • Other than the above: From the first version
	MX Component	4.06G or later
	MX Sheet	*2
QCPU (Q mode)	MELSOFT Navigator	1.04E or later
	GX Developer	8.118Y or later
	GX Works2	1.03D or later
	MX Component	4.03D or later
	MX Sheet	*1
LCPU	MELSOFT Navigator	1.07H or later
	GX Developer	8.118Y or later
	GX Works2	1.11M or later
	GX LogViewer	From the first version
	MX Component	4.03D or later
	MX Sheet	*1
	CPU Module Logging Configuration Tool	1.04E or later

*1 Use MX Component (Version 3.14Q or later) for MX Sheet.
*2 Use MX Component (Version 4.06G or later) for MX Sheet.

■When connecting the GOT and controller using the Ethernet connection

The following shows the software and the accessible controllers.

Controller	Software	Applicable version
RCPU	GX Works3*5	• RCPU redundant system: 1.030G or later • Other than the above: From the first version
	MX Component	4.06G or later
	MX Sheet	*3
Motion CPU (MELSEC iQ-R series)	MT Works2	1.100E or later
	MX Component	4.06G or later
	MX Sheet	*3
Robot controller (CR800-R, CR800-D)	RT ToolBox3	From the first version
C Controller module (MELSEC iQ-R series)	CW Configurator	From the first version
FX5U, FX5UC	GX Works3*5	• When using FX5-ENET or FX5-ENET/IP: 1.075D or later • Other than the above: 1.005F or later
	MX Component	• When using FX5-ENET or FX5-ENET/IP: Not available • Other than the above: 4.11M or later
	MX Sheet	• When using FX5-ENET or FX5-ENET/IP: Not available • Other than the above: *4
QCPU (Q mode)*1, C Controller module (Q series)	MELSOFT Navigator	1.04E or later
	GX Developer	8.118Y or later
	GX Works2*5	1.10L or later
	MX Component	4.03D or later
	MX Sheet	*2
LCPU	MELSOFT Navigator	1.07H or later
	GX Developer	8.118Y or later
	GX Works2*5	1.11M or later
	GX LogViewer	From the first version
	MX Component	4.03D or later
	MX Sheet	*2
	CPU Module Logging Configuration Tool	1.04E or later
FXCPU	GX Works2	1.98C or later
Motion CPU (Q series)	MELSOFT Navigator	1.04E or later
	SW6RN-GSV13P, SW6RN-GSV22P, SW6RN-GSV43P, SW6RN-GSV54P, SW6RN-DOSCP, SW6RN-SNETP (for user APIs)	From the first version
	MT Works2	• When connecting to Q17nDCPU-S1: 1.12N or later • Other than the above: 1.08J or later
Robot controller (CRnQ-700, CRnD-700)	RT ToolBox2	3.00 or later
	RT ToolBox3	From the first version

*1 Only QCPU can be connected. When connecting the GOT to QnA/ACPU, connect the GOT via QCPU.
*2 Use MX Component (Version 3.14Q or later) for MX Sheet.
*3 Use MX Component (Version 4.06G or later) for MX Sheet.
*4 Use MX Component (Version 4.11M or later) for MX Sheet.
*5 For connection through a servo amplifier, the FA transparent function is not supported.

When connecting the GOT and the personal computer via Ethernet

■When connecting the GOT and controller using the bus connection

The following shows the software and the accessible controllers.

Controller	Software	Applicable version
QCPU (Q mode), C Controller module (Q series)	GX Works2	1.48A or later
	MX Component	3.15R or later
	MX Sheet	*1
	Setting/monitoring tool for C Controller module	4.00A or later
Motion CPU (Q series)	MT Works2	1.25B or later
MELSERVO (MR-J3-B) *2	MR Configurator2	1.07H or later
MELSERVO (MR-J4-B) *2	MR Configurator2	1.09K or later

*1 Use MX Component (Version 3.15R or later) for MX Sheet.
*2 A Motion controller is required between the GOT and controller in the bus connection.

■When connecting the GOT and controller using the direct CPU connection (serial)

The following shows the software and the accessible controllers.

Controller	Software	Applicable version
FX5U, FX5UC	GX Works3	1.005F or later
	MX Component	4.11M or later
	MX Sheet	*4
FX5UJ	GX Works3	1.060N or later
FX5S	GX Works3	1.080J or later
QCPU (Q mode)	GX Works2	1.48A or later
	MX Component	3.15R or later
	MX Sheet	*2
LCPU*1	GX Works2	1.48A or later
	MX Component	3.15R or later
	MX Sheet	*2
FXCPU	GX Works2	1.73B or later
	MX Component	4.05F or later
	MX Sheet	*5
Motion CPU (Q series)	MT Works2	1.19V or later
FR-A800 series	FR Configurator2	1.31H or later
FR-F800 series	FR Configurator2	1.31H or later
FR-E800 series	FR Configurator2	1.31H or later
MELSERVO (MR-J3-B)*3	MR Configurator2	1.07H or later
MELSERVO (MR-J4-B)*3	MR Configurator2	1.09K or later

*1 An adapter (L6ADP-R2 or L6ADP-R4) is required to use an LCPU other than the following.
- L02SCPU
- L02SCPU-P

When using L6ADP-R4, use an LCPU having a serial number starting with 15102 or later.
*2 Use MX Component (Version 3.15R or later) for MX Sheet.
*3 A Motion controller is required between the GOT and controller in the direct CPU connection (serial).
*4 Use MX Component (Version 4.11M or later) for MX Sheet.
*5 Use MX Component (Version 4.05F or later) for MX Sheet.

■When connecting the GOT and controller using the serial communication connection

The following shows the software and the accessible controllers.

Controller	Software	Applicable version
RCPU	GX Works3	• RCPU redundant system: 1.030G or later • Other than the above: From the first version
	MX Component	4.06G or later
	MX Sheet	*2
	CPU Module Logging Configuration Tool	1.142Y or later
Motion CPU (MELSEC iQ-R series)	MX Component	4.05F or later
	MX Sheet	*3
C Controller module (MELSEC iQ-R series)	CW Configurator	1.013P or later
MELSECWinCPU (MELSEC iQ-R series)	CW Configurator	1.013P or later
QCPU (Q mode)	GX Works2	1.48A or later
	MX Component	3.15R or later
	MX Sheet	*1
LCPU	GX Works2	1.48A or later
	MX Component	3.15R or later
	MX Sheet	*1

*1 Use MX Component (Version 3.15R or later) for MX Sheet.
*2 Use MX Component (Version 4.06G or later) for MX Sheet.
*3 Use MX Component (Version 4.05F or later) for MX Sheet.

■When connecting the GOT and controller using the CC-Link IE Controller Network connection

The following shows the software and the accessible controllers.

Controller	Software	Applicable version
RCPU	GX Works3	• RCPU redundant system: 1.030G or later • Other than the above: 1.025B or later
	CPU Module Logging Configuration Tool	1.142Y or later
C Controller module (MELSEC iQ-R series)	CW Configurator	1.013P or later
MELSECWinCPU (MELSEC iQ-R series)	CW Configurator	1.013P or later
QCPU (Q mode), C Controller module (Q series)	GX Works2	1.525X or later
Motion CPU (Q series) (Q170MCPU, Q170MSCPU, and Q170MSCPU-S1 only)	GX Works2	1.525X or later

■When connecting the GOT and controller using the CC-Link IE Field Network connection

The following shows the software and the accessible controllers.

Controller	Software	Applicable version
RCPU	GX Works3	1.030G or later (Same for the RCPU redundant system)
	CPU Module Logging Configuration Tool	1.142Y or later
C Controller module (MELSEC iQ-R series)	CW Configurator	1.013P or later
FX5U, FX5UC	GX Works3	1.035M or later
FX5UJ	GX Works3	1.060N or later
QCPU (Q mode)	GX Works2	1.545T or later
Motion CPU (Q series) (Q170MCPU, Q170MSCPU, and Q170MSCPU-S1 only)	GX Works2	1.545T or later
LCPU	GX Works2	1.545T or later

■When connecting the GOT and controller using the Ethernet connection

The following shows the software and the accessible controllers.

Controller	Software	Applicable version
RCPU	GX Works3	1.040S or later
	CPU Module Logging Configuration Tool	1.142Y or later
Motion CPU (MELSEC iQ-R series)	MT Works2	1.140W or later
FX5U, FX5UC	GX Works3	• When using FX5-ENET or FX5-ENET/IP: 1.075D or later • Other than the above: 1.045X or later
FX5UJ	GX Works3	1.060N or later
FX5S	GX Works3	1.080J or later
QCPU (Q mode)	GX Works2	1.565P or later
	MX Component	4.14Q or later
	MX Sheet	2.11M or later
Motion CPU (Q series) (Q170MCPU, Q170MSCPU, and Q170MSCPU-S1 only)	GX Works2	1.565P or later
LCPU	GX Works2	1.565P or later
FXCPU	GX Works2	1.570U or later
MELIPC	MI Configurator	From the first version
FR-E700 (FR-E7□0-NE), FR-A800, and FR-F800 series	FR Configurator2	1.16S or later
FR-E800 series	FR Configurator2	1.19V or later

■When connecting the GOT and controller using the CC-Link IE TSN connection

The following shows the software and the accessible controllers.

Controller	Software	Applicable version
RCPU	GX Works3	1.080J or later
	CPU Module Logging Configuration Tool	1.142Y or later

23.3 List of Models that Can Be Monitored

The following models support FA transparent function.

When connecting the GOT and the personal computer by USB

■MELSEC iQ-R Series

Model name	Target software	Connection type						
		Bus connection	Direct CPU connection (serial)	Serial communication connection	Ethernet connection	CC-Link IE TSN connection	CC-Link IE controller network connection	CC-Link IE field network connection
R00CPU *1 R01CPU *1 R02CPU *1 R04CPU R08CPU R16CPU R32CPU R120CPU	GX Works3*8 MX Component*4 MX Sheet*4 CPU Module Logging Configuration Tool	-	-	GT27 GT25 GT23 GT21 07W GT21 05Q GT21 04R GT21 03P 04P ET/R4 GT21 03P 04P R4 GT21 03P 04P R2 GS25 GS21	GT27 GT25 GT23 GT21 07W GT21 04R GT21 03P 04P ET/R4 GS25 GS21	GT27 GT25 *7	GT27 GT25 *7	GT27 GT25 *7
R08PCPU R16PCPU R32PCPU R120PCPU						-		
R04ENCPU *3 R08ENCPU *3 R16ENCPU *3 R32ENCPU *3 R120ENCPU *3						GT27 GT25 *7		
R08SFCPU *2*3 R16SFCPU *2*3 R32SFCPU *2*3 R120SFCPU *2*3								
R08PSFCPU *5 R16PSFCPU *5 R32PSFCPU *5 R120PSFCPU *5	GX Works3 *6	-	-	-	GT27 GT25 GT23 GT21 07W GT21 04R GT21 03P 04P ET/R4 GS25 GS21	-	GT27 GT25 *7	GT27 GT25 *7

*1 For R00CPU, R01CPU, R02CPU, use GX Works3 Ver.1.040S and later.
*2 Mount a safety function module R6SFM next to the RnSFCPU on the base unit.
The RnSFCPU and the safety function module R6SFM must have the same pair version.
If their pair versions differ, the RnSFCPU does not operate.
*3 Please use the MX Component Version 4.11M or later.
MX Sheet, please use the MX Component (Version 4.11M or later).
*4 MX Component or MX Sheet does not support the FA transparent function through CC-Link IE Controller Network.
*5 Mount a SIL2 function module R6PSFM and a redundant function module R6RFM next to RnPSFCPU on the base unit.
*6 Use GX Works3 Version 1.050C or later.
*7 GT25-W, GT2505-V is not supported.
*8 GX Works3 Ver.1.080J or later is required to use the FA transparent function using the CC-Link IE TSN connection.

■Motion CPU (MELSEC iQ-R Series)

Model name	Target software	Connection type						
		Bus connection	Direct CPU connection (serial)	Serial communication connection	Ethernet connection	CC-Link IE TSN connection	CC-Link IE controller network connection	CC-Link IE field network connection
R16MTCPU R32MTCPU R64MTCPU	MT Works2	-	-	-	GT27 GT25 GT23 GT21 07W GT21 04R GT21 03P 04P ET/R4 GS25 GS21	-	-	-
	MX Component MX Sheet	-	-	GT27 GT25 GT23 GT21 07W GT21 05Q GT21 04R GT21 03P 04P ET/R4 GT21 03P 04P R4 GT21 03P 04P R2 GS25 GS21	GT27 GT25 GT23 GT21 07W GT21 04R GT21 03P 04P ET/R4 GS25 GS21	-	-	-

■C controller module (MELSEC iQ-R Series)

Model name	Target software	Connection type						
		Bus connection	Direct CPU connection (serial)	Serial communication connection	Ethernet connection	CC-Link IE TSN connection	CC-Link IE controller network connection	CC-Link IE field network connection
R12CCPU-V	CW Configurator*1	-	-	GT27 GT25 GT23 GT21 07W GT21 05Q GT21 04R GT21 03P 04P ET/R4 GT21 03P 04P R4 GT21 03P 04P R2 GS25 GS21	GT27 GT25 GT23 GT21 07W GT21 04R GT21 03P 04P ET/R4 GS25 GS21	-	GT27 GT25 *2	GT27 GT25 *2

*1 CW Configurator Ver.1.013P or later is required to use the FA transparent function through one of the following:
- Serial communication connection
- CC-Link IE Controller Network connection
- CC-Link IE Field Network connection

*2 Not available to GT25-W and GT2505-V.

■MELSECWinCPU (MELSEC iQ-R Series)

Model name	Target software	Connection type						
		Bus connection	Direct CPU connection (serial)	Serial communication connection	Ethernet connection	CC-Link IE TSN connection	CC-Link IE controller network connection	CC-Link IE field network connection
R102WCPU-W	CW Configurator*1	-	-	GT27 GT25 GT23 GT2107W GT2105Q GT2104R GT2103P 2104P ET/R4 GT2103P 2104P R4 GT2103P 2104P R2 GS25 GS21	GT27 GT25 GT23 GT2107W GT2104R GT2103P 2104P ET/R4 GS25 GS21	-	GT27 GT25 *2	-

*1 Use CW Configurator Ver.1.013P or later.
*2 Not available to GT25-W and GT2505-V.

■CNC C80

Model name	Target software	Connection type						
		Bus connection	Direct CPU connection (serial)	Serial communication connection	Ethernet connection	CC-Link IE TSN connection	CC-Link IE controller network connection	CC-Link IE field network connection
R16NCCPU-S1	GX Works3	-	-	-	GT27 GT25 GT23 GS25	-	-	-

■Robot controller (MELSEC iQ-R Series)

Model name	Target software	Connection type						
		Bus connection	Direct CPU connection (serial)	Serial communication connection	Ethernet connection	CC-Link IE TSN connection	CC-Link IE controller network connection	CC-Link IE field network connection
CR800-R(R16RTCPU)	RT ToolBox3	-	-	-	GT27 GT25 GT23 GT21 07W GT21 04R GT21 03P 04P ET/R4 GS25 GS21	-	-	-
CR800-D	RT ToolBox3	-	-	-	GT27 GT25 GT23 GT21 07W GT21 04R GT21 03P 04P ET/R4 GS25 GS21	-	-	-

■CC-Link IE Field Network head module

Model name	Target software	Connection type						
		Bus connection	Direct CPU connection (serial)	Serial communication connection	Ethernet connection	CC-Link IE TSN connection	CC-Link IE controller network connection	CC-Link IE field network connection
RJ72GF15-T2	GX Works3	-	-	GT27 GT25 GT23 GT21 07W GT21 05Q GT21 04R GT21 03P 04P ET/R4 GT21 03P 04P R4 GT21 03P 04P R2 GS25 GS21	GT27 GT25 GT23 GT21 07W GT21 04R GT21 03P 04P ET/R4 GS25 GS21	-	GT27 GT25 *1	GT27 GT25 *1

*1 GT25-W, GT2505-V is not supported.

■MELSEC iQ-F Series

Model name	Target software	Connection type						
		Bus connection	Direct CPU connection (serial)	Serial communication connection	Ethernet connection	CC-Link IE TSN connection	CC-Link IE controller network connection	CC-Link IE field network connection
FX5U FX5UC	GX Works3*1 MX Component*2*3 MX Sheet*2*3	-	GT27 GT25 GT23 GT21 07W GT21 05Q GT21 04R GT21 03P 04P ET/R4 GT21 03P 04P R4 GT21 03P 04P R2 GT21 03P 04P R4-5V GS25 GS21	-	GT27 GT25 GT23 GT21 07W GT21 04R GT21 03P 04P ET/R4 GS25 GS21	-	-	GT27 GT25 *5
FX5UJ	GX Works3*4	-	GT27 GT25 GT23 GT21 07W GT21 05Q GT21 04R GT21 03P 04P ET/R4 GT21 03P 04P R4 GT21 03P 04P R2 GT21 03P 04P R4-5V GS25 GS21	-	GT27 GT25 GT23 GT21 07W GT21 04R GT21 03P 04P ET/R4 GS25 GS21	-	-	GT27 GT25 *5
FX5S	GX Works3*6	-	GT27 GT25 GT23 GT21 07W GT21 05Q GT21 04R GT21 03P 04P ET/R4 GT21 03P 04P R4 GT21 03P 04P R2 GT21 03P 04P R4-5V GS25 GS21	-	GT27 GT25 GT23 GT21 07W GT21 04R GT21 03P 04P ET/R4 GS25 GS21	-	-	-

*1 Use FX5-ENET Version 1.240 or later.
*2 The FA transparent through FX5-ENET is not supported.
*3 Please use the MX Component Version 4.11M or later.
MX Sheet, please use the MX Component (Version 4.11M or later).
*4 Use GX Works3 Version 1.060N or later.
*5 GT25-W, GT2505-V is not supported.
*6 Use GX Works3 Version 1.080J or later.

■MELSEC-Q (Q mode)

Model name	Target software	Connection type						
		Bus connection	Direct CPU connection (serial)	Serial communication connection	Ethernet connection	CC-Link IE TSN connection	CC-Link IE controller network connection	CC-Link IE field network connection
Q00JCPU Q00CPU Q01CPU	GX Works2 GX Developer *1 GX Configurator *1 PX Developer *1 MX Component *1 MX Sheet *1	GT27 GT25 *4	GT27 GT25 GT23 GT21 07W GT21 05Q GT21 04R GT21 03P 04P R4 GT21 03P 04P R2 GS25 GS21	GT27 GT25 GT23 GT21 07W GT21 05Q GT21 04R GT21 03P 04P R4 GT21 03P 04P R2 GS25 GS21	GT27 GT25 GT23 GT21 07W GT21 04R GT21 03P 04P ET/R4 GS25 GS21	-	GT27 GT25 *4	GT27 GT25 *4

Model name	Target software	Connection type						
		Bus connection	Direct CPU connection (serial)	Serial communication connection	Ethernet connection	CC-Link IE TSN connection	CC-Link IE controller network connection	CC-Link IE field network connection
Q02CPU Q02HCPU Q06HCPU Q12HCPU Q25HCPU	GX Works2 GX Developer *1 GX Configurator *1 PX Developer *1 MX Component *1 MX Sheet *1	GT27 GT25 *4	GT27 GT25 GT23 GT21 07W GT21 05Q GT21 04R GT21 03P 04P ET/R4 GT21 03P 04P R4 GT21 03P 04P R2 GS25 GS21	GT27 GT25 GT23 GT21 07W GT21 05Q GT21 04R GT21 03P 04P R4 GT21 03P 04P R2 GS25 GS21	GT27 GT25 GT23 GT21 07W GT21 04R GT21 03P 04P ET/R4 GS25 GS21	-	GT27 GT25 *4	GT27 GT25 *4
Q02PHCPU Q06PHCPU Q12PHCPU Q25PHCPU	GX Works2 GX Developer *1 GX Configurator *1 PX Developer *1 MX Component *1 MX Sheet *1	GT27 GT25 *4	GT27 GT25 GT23 GS25	GT27 GT25 GT23 GS25	GT27 GT25 GT23 GS25	-	GT27 GT25 *4	GT27 GT25 *4
Q12PRHCPU (Main base) Q25PRHCPU (Main base)	GX Works2 GX Developer *1 GX Configurator *1 PX Developer *1 MX Component *1 MX Sheet *1	-	GT27 GT25 GS25	-	GT27 GT25 GS25	-	GT27 GT25 *4	GT27 GT25 *4
Q12PRHCPU (Extension base) Q25PRHCPU (Extension base)	-	-	-	-	-	-	-	-
Q00UJCPU Q00UJCPU-S8 Q00UCPU Q01UCPU Q02UCPU Q03UDCPU Q04UDHCPU Q06UDHCPU Q10UDHCPU Q13UDHCPU Q20UDHCPU Q26UDHCPU	GX Works2 GX Developer *1 GX Configurator *1 PX Developer *1 MX Component *1 MX Sheet *1	GT27 GT25 *4	GT27 GT25 GT23 GT21 07W GT21 05Q GT21 04R GT21 03P 04P R4 GT21 03P 04P R2 GS25 GS21	GT27 GT25 GT23 GT21 07W GT21 05Q GT21 04R GT21 03P 04P R4 GT21 03P 04P R2 GS25 GS21	GT27 GT25 GT23 GT21 07W GT21 04R GT21 03P 04P ET/R4 GS25 GS21	-	GT27 GT25 *4	GT27 GT25 *4
Q03UDECPU Q04UDEHCPU Q06UDEHCPU Q10UDEHCPU Q13UDEHCPU Q20UDEHCPU Q26UDEHCPU Q50UDEHCPU Q100UDEHCPU Q03UDVCPU *2 Q04UDVCPU *2 Q06UDVCPU *2 Q13UDVCPU *2 Q26UDVCPU *2	GX Works2 GX Developer *1 GX Configurator *1 PX Developer *1 MX Component *1 MX Sheet *1	GT27 GT25 *4	GT27 GT25 GT23 GT21 07W GT21 05Q GT21 04R GT21 03P 04P R4 GT21 03P 04P R2 GS25 GS21 *3	GT27 GT25 GT23 GT21 07W GT21 05Q GT21 04R GT21 03P 04P R4 GT21 03P 04P R2 GS25 GS21	GT27 GT25 GT23 GT21 07W GT21 04R GT21 03P 04P ET/R4 GS25 GS21	-	GT27 GT25 *4	GT27 GT25 *4

*1 GX Developer, GX Configurator, PX Developer, MX Component, or MX Sheet does not support the FA transparent function through CC-Link IE Controller Network, CC-Link IE Field Network.

*2 CPU Module Logging Configuration Tool and GX LogViewer are supported.

*3 Use the serial port of QCPU in the multiple CPU system, since the CPU has no direct coupled I/F.

*4 GT25-W, GT2505-V is not supported.

■C Controller module (Q Series)

Model name	Target software	Connection type						
		Bus connection	Direct CPU connection (serial)	Serial communication connection	Ethernet connection	CC-Link IE TSN connection	CC-Link IE controller network connection	CC-Link IE field network connection
Q12DCCPU-V	GX Works2 GX Developer *1 MX Component *1 MX Sheet *1	GT27 GT25 *2*3	GT27 GT25 GT23 GT21 07W GT21 05Q GT21 04R GT21 03P 04P ET/R4 GT21 03P 04P R4 GT21 03P 04P R2 GS25 GS21 *4	-	GT27 GT25 GT23 GT21 07W GT21 04R GT21 03P 04P ET/R4 GS25 GS21 *2	-	GT27 GT25 *3	GT27 GT25 *3
Q24DHCCPU-V/VG Q24DHCCPU-LS Q26DHCCPU-LS	GX Works2 GX Developer *1 MX Component *1 MX Sheet *1	GT27 GT25 *2*3	GT27 GT25 GT23 GT21 07W GT21 05Q GT21 04R GT21 03P 04P ET/R4 GT21 03P 04P R4 GT21 03P 04P R2 GS25 GS21 *4	-	GT27 GT25 GT23 GT21 07W GT21 04R GT21 03P 04P ET/R4 GS25 GS21 *2	-	GT27 GT25 *3	GT27 GT25 *3
	Setting/Monitoring tool for C Controller module	GT27 GT25 *2*3	GT27 GT25 GT23 GT21 07W GT21 05Q GT21 04R GT21 03P 04P ET/R4 GT21 03P 04P R4 GT21 03P 04P R2 GS25 GS21 *4	-	GT27 GT25 GT23 GT21 07W GT21 04R GT21 03P 04P ET/R4 GS25 GS21	-	-	-

*1 GX Developer, MX Component or MX Sheet, GX LogViewer, CPU Module Logging Configuration Tool does not support the FA transparent function through CC-Link IE Controller Network, CC-Link IE Field Network.

*2 When using Q12DCCPU-V1 or Q24DHCCPU-V/VG as the connected CPU, only MX Component can be used.
When accessing other CPUs relaying Q12DCCPU-V or Q24DHCCPU-V/VG, GX Works2 can also be used.

*3 GT25-W, GT2505-V is not supported.

*4 Use the serial port of QCPU in the multiple CPU system since Q12DCCPU-V1 and Q24DHCCPU-V/VG have no direct coupled I/F.

■MELSEC-QS

Model name	Target software	Connection type						
		Bus connection	Direct CPU connection (serial)	Serial communication connection	Ethernet connection	CC-Link IE TSN connection	CC-Link IE controller network connection	CC-Link IE field network connection
QS001CPU	-	-	-	-	-	-	-	-

■MELSEC-L

Model name	Target software	Connection type						
		Bus connection	Direct CPU connection (serial)	Serial communication connection	Ethernet connection	CC-Link IE TSN connection	CC-Link IE controller network connection	CC-Link IE field network connection
L02CPU L06CPU L26CPU L26CPU-BT L06CPU-P *1 L26CPU-P *1 L02CPU-P *1 L26CPU-PBT *1 L02SCPU L02SCPU-P *1	GX Works2 *2 GX Developer *3 GX LogViewer *3 MX Component *3 MX Sheet *3 CPU Module Logging Configuration Tool *3	-	GT27 GT25 GT23 GT21 07W GT21 05Q GT21 04R GT21 03P 04P ET/R4 GT21 03P 04P R4 GT21 03P 04P R2 GS25 GS21	GT27 GT25 GT23 GT21 07W GT21 05Q GT21 04R GT21 03P 04P ET/R4 GT21 03P 04P R4 GT21 03P 04P R2 GS25 GS21	GT27 GT25 GT23 GT21 07W GT21 04R GT21 03P 04P ET/R4 GS25 GS21 *4	-	-	GT27 GT25 *5

*1 L02CPU-P, L06CPU-P, L26CPU-P, L02SCPU-P, and L26CPU-PBT do not support MX Component and MX Sheet.
*2 GX Works2 cannot be connected to the MELSEC-L series through the Ethernet port of the MELSEC iQ-R series built-in Ethernet port CPU.
*3 GX Developer, MX Component or MX Sheet, GX LogViewer, CPU Module Logging Configuration Tool does not support the FA transparent function through CC-Link IE Controller Network, CC-Link IE Field Network.
*4 When connecting to the Ethernet unit (LJ71E71-100) , use MX Component Version 4.13P or later and MX Sheet Version 2.10L or later.
*5 GT25-W, GT2505-V is not supported.

■MELSEC-Q (A mode)

Model name	Target software	Connection type						
		Bus connection	Direct CPU connection (serial)	Serial communication connection	Ethernet connection	CC-Link IE TSN connection	CC-Link IE controller network connection	CC-Link IE field network connection
Q02CPU-A Q02HCPU-A Q06HCPU-A	GX Developer MX Component MX Sheet	-	GT27 GT25 GT23 GT21 07W GT21 05Q GT21 04R GT21 03P 04P ET/R4 GT21 03P 04P R4 GT21 03P 04P R2 GS25 GS21	GT27 GT25 GT23 GT21 07W GT21 05Q GT21 04R GT21 03P 04P ET/R4 GT21 03P 04P R4 GT21 03P 04P R2 GS25 GS21	GT27 GT25 GT23 GS25	-	-	-

■MELSEC-QnA(QnACPU)

Model name	Target software	Connection type						
		Bus connection	Direct CPU connection (serial)	Serial communication connection	Ethernet connection	CC-Link IE TSN connection	CC-Link IE controller network connection	CC-Link IE field network connection
Q2ACPU Q2ACPU-S1 Q3ACPU Q4ACPU	GX Developer MX Component MX Sheet	-	GT27 GT25 GT23 GT2107W GT2105Q GT2104R GT2103P 2104P R4 GT2103P 2104P R2 GS25 GS21	GT27 GT25 GT23 GT2107W GT2105Q GT2104R GT2103P 2104P ET/R4 GT2103P 2104P R4 GT2103P 2104P R2 GS25 GS21	GT27 GT25 GT23 GS25 GS21	-	-	-
Q4ARCPU	GX Developer MX Component MX Sheet	-	GT27 GT25 GT23 GS25	GT27 GT25 GT23 GS25	GT27 GT25 GT23 GS25	-	-	-

■MELSEC-QnA(QnASCPU)

Model name	Target software	Connection type						
		Bus connection	Direct CPU connection (serial)	Serial communication connection	Ethernet connection	CC-Link IE TSN connection	CC-Link IE controller network connection	CC-Link IE field network connection
Q2ASCPU Q2ASCPU-S1 Q2ASHCPU Q2ASHCPU-S1	GX Developer MX Component MX Sheet	-	GT27 GT25 GT23 GT2107W GT2105Q GT2104R GT2103P 2104P R4 GT2103P 2104P R2 GS25 GS21	-	-	-	-	-

■MELSEC-A(AnCPU)

Model name	Target software	Connection type						
		Bus connection	Direct CPU connection (serial)	Serial communication connection	Ethernet connection	CC-Link IE TSN connection	CC-Link IE controller network connection	CC-Link IE field network connection
A2UCPU A2UCPU-S1	GX Developer MX Component MX Sheet	GT27 GT25 *1*2	GT27 GT25 GT23 GT21 07W GT21 05Q GT21 04R GT21 03P 04P R4 GS25 GS21	-	-	-	-	-
A3UCPU								
A4UCPU								
A2ACPU A2ACPUP21 A2ACPUR21 A2ACPU-S1 A2ACPUP21-S1 A2ACPUR21-S1								
A3ACPU A3ACPUP21 A3ACPUR21								
A1NCPU A1NCPUP21 A1NCPUR21								
A2NCPU A2NCPUP21 A2NCPUR21 A2NCPU-S1 A2NCPUP21-S1 A2NCPUR21-S1								
A3NCPU A3NCPUP21 A3NCPUR21								

*1 Do not execute the write during RUN in the bus connection.
*2 GT25-W, GT2505-V is not supported.

■MELSEC-A(AnSCPU)

Model name	Target software	Connection type						
		Bus connection	Direct CPU connection (serial)	Serial communication connection	Ethernet connection	CC-Link IE TSN connection	CC-Link IE controller network connection	CC-Link IE field network connection
A2USCPU A2USCPU-S1 A2USHCPU-S1	GX Developer MX Component MX Sheet	GT27 GT25 *1	GT27 GT25 GT23 GT2107W GT2105Q GT2104R GT2103P 2104P R4 GS25 GS21	-	-	-	-	-
A1SCPU A1SCPUC24-R2 A1SHCPU								
A2SCPU A2SCPU-S1 A2SHCPU A2SHCPU-S1								
A1SJCPU A1SJCPU-S3 A1SJHCPU								

*1 GT25-W, GT2505-V is not supported.

■MELSEC-A

Model name	Target software	Connection type						
		Bus connection	Direct CPU connection (serial)	Serial communication connection	Ethernet connection	CC-Link IE TSN connection	CC-Link IE controller network connection	CC-Link IE field network connection
A0J2HCPU A0J2HCPUP21 A0J2HCPUR21 A0J2HCPU-DC24	GX Developer MX Component MX Sheet	GT27 GT25 *1*2	GT27 GT25 GT23 GT2107W GT2105Q GT2104R GT2103P 2104P R4 GS25 GS21	-	-	-	-	-
A2CCPU A2CCPUP21 A2CCPUR21	GX Developer MX Component MX Sheet	-	GT27 GT25 GT23 GT2107W GT2105Q GT2104R GT2103P 2104P R4 GS25 GS21	-	-	-	-	-
A2CCPUC24 A2CCPUC24-PRF								
A2CJCPU-S3								
A1FXCPU								

*1 Do not execute the write during RUN in the bus connection.
*2 GT25-W, GT2505-V is not supported.

■Motion CPU (Q Series)

Model name	Target software	Connection type						
		Bus connection	Direct CPU connection (serial)	Serial communication connection	Ethernet connection	CC-Link IE TSN connection	CC-Link IE controller network connection	CC-Link IE field network connection
Q172CPU Q173CPU Q172CPUN Q173CPUN	MT Developer	GT27 GT25 *1	GT27 GT25 GT23 GT21 07W GT21 05Q GT21 04R GT21 03P 04P ET/R4 GT21 03P 04P R4 GT21 03P 04P R2 GS25 GS21	-	-	-	-	-
Q172HCPU Q173HCPU	MT Developer MR Configurator	GT27 GT25 *1	GT27 GT25 GT23 GT21 07W GT21 05Q GT21 04R GT21 03P 04P ET/R4 GT21 03P 04P R4 GT21 03P 04P R2 GS25 GS21 *2	-	-	-	-	-
Q172DCPU Q173DCPU Q172DCPU-S1 Q173DCPU-S1 Q172DSCPU Q173DSCPU	MT Works2	GT27 GT25 *1	GT27 GT25 GT23 GT21 07W GT21 05Q GT21 04R GT21 03P 04P ET/R4 GT21 03P 04P R4 GT21 03P 04P R2 GS25 GS21 *3	-	GT27 GT25 GT23 GT21 07W GT21 04R GT21 03P 04P ET/R4 GS25 GS21	-	-	-
Q170MCPU Q170MSCPU Q170MSCPU-S1	MT Works2 *4 GX Works2	GT27 GT25 *1	GT27 GT25 GT23 GT21 07W GT21 05Q GT21 04R GT21 03P 04P ET/R4 GT21 03P 04P R4 GT21 03P 04P R2 GS25 GS21	-	GT27 GT25 GT23 GT21 07W GT21 04R GT21 03P 04P ET/R4 GS25 GS21	-	GT27 GT25 *1	GT27 GT25 *1

*1 GT25-W, GT2505-V is not supported.

*2 Use the serial port of QCPU in the multiple CPU system since only the USB port is available as the direct coupled I/F for Q172H/Q173HCPU.

*3 Use the serial port of QCPU in the multiple CPU system since Q172D/Q173DCPU has no direct coupled I/F.

*4 MT Works2 does not support the FA transparent function through CC-Link IE Controller Network, CC-Link IE Field Network.

■Motion CPU (A Series)

Model name	Target software	Connection type						
		Bus connection	Direct CPU connection (serial)	Serial communication connection	Ethernet connection	CC-Link IE TSN connection	CC-Link IE controller network connection	CC-Link IE field network connection
A273UCPU A273UHCPU A273UHCPU-S3 A373UCPU A373UCPU-S3	GX Developer MX Component MX Sheet	GT27 GT25 *1*2	GT27 GT25 GT23 GS25	-	-	-	-	-
A171SCPU A171SCPU-S3 A171SCPU-S3N A171SHCPU A171SHCPUN A172SHCPU A172SHCPUN A173UHCPU A173UHCPU-S1								

*1 Do not execute the write during RUN in the bus connection.
*2 GT25-W, GT2505-V is not supported.

■MELSEC-FX

Model name	Target software	Connection type						
		Bus connection	Direct CPU connection (serial)	Serial communication connection	Ethernet connection	CC-Link IE TSN connection	CC-Link IE controller network connection	CC-Link IE field network connection
FX0	GX Works2 GX Developer MX Component MX Sheet	-	GT27 GT25 GT23 GT21 07W GT21 05Q GT21 04R GT21 03P 04P ET/R4 GT21 03P 04P R4 GS25 GS21	-	-	-	-	-
FX0S FX0N	GX Works2 GX Developer MX Component MX Sheet	-	GT27 GT25 GT23 GT21 07W GT21 05Q GT21 04R GT21 03P 04P ET/R4 GT21 03P 04P R4 GT21 03P 04P R4-5V GS25 GS21	-	-	-	-	-
FX1 FX2 FX2C	GX Works2 GX Developer MX Component MX Sheet	-	GT27 GT25 GT23 GT21 07W GT21 05Q GT21 04R GT21 03P 04P R4 GS25 GS21	-	-	-	-	-

Model name	Target software	Connection type						
		Bus connection	Direct CPU connection (serial)	Serial communication connection	Ethernet connection	CC-Link IE TSN connection	CC-Link IE controller network connection	CC-Link IE field network connection
FX1S FX1N FX2N FX1NC FX2NC	GX Works2 GX Developer MX Component MX Sheet	-	GT27 GT25 GT23 GT21 07W GT21 05Q GT21 04R GT21 03P 04P ET/R4 GT21 03P 04P R4 GT21 03P 04P R2 GT21 03P 04P R4-5V GS25 GS21	-	-	-	-	-
FX3G(C) FX3S FX3GE	GX Developer FX Configurator-FP	-	GT27 GT25 GT23 GT21 07W GT21 05Q GT21 04R GT21 03P 04P ET/R4 GT21 03P 04P R4 GT21 03P 04P R2 GT21 03P 04P R4-5V GS25 GS21	-	-	-	-	-
	GX Works2 MX Component MX Sheet	-	GT27 GT25 GT23 GT21 07W GT21 05Q GT21 04R GT21 03P 04P ET/R4 GT21 03P 04P R4 GT21 03P 04P R2 GT21 03P 04P R4-5V GS25 GS21	-	GT27 GT25 GT23 GT21 07W GT21 04R GT21 03P 04P ET/R4 GS25 GS21	-	-	-
FX3U(C) *1	GX Developer FX Configurator-FP FX Configurator-EN-L FX Configurator-EN	-	GT27 GT25 GT23 GT21 07W GT21 05Q GT21 04R GT21 03P 04P ET/R4 GT21 03P 04P R4 GT21 03P 04P R2 GT21 03P 04P R4-5V GS25 GS21	-	-	-	-	-
	GX Works2 MX Component MX Sheet	-	GT27 GT25 GT23 GT21 07W GT21 05Q GT21 04R GT21 03P 04P ET/R4 GT21 03P 04P R4 GT21 03P 04P R2 GT21 03P 04P R4-5V GS25 GS21	-	GT27 GT25 GT23 GT21 07W GT21 04R GT21 03P 04P ET/R4 GS25 GS21	-	-	-

*1 For FX3U-ENET-L and FX3U-ENET, use a module with version 1.12 or later and serial number 1340001 or later.

■MELSEC-WS

Model name	Target software	Connection type						
		Bus connection	Direct CPU connection (serial)	Serial communication connection	Ethernet connection	CC-Link IE TSN connection	CC-Link IE controller network connection	CC-Link IE field network connection
WS0-CPU0 WS0-CPU1 WS0-CPU3	-	-	-	-	-	-	-	-

■MELSECNET/H Remote I/O station

Model name	Target software	Connection type						
		Bus connection	Direct CPU connection (serial)	Serial communication connection	Ethernet connection	CC-Link IE TSN connection	CC-Link IE controller network connection	CC-Link IE field network connection
QJ72LP25-25 QJ72LP25G QJ72BR15	-	-	-	-	-	-	-	-

■CC-Link IE Field Network head module

Model name	Target software	Connection type						
		Bus connection	Direct CPU connection (serial)	Serial communication connection	Ethernet connection	CC-Link IE TSN connection	CC-Link IE controller network connection	CC-Link IE field network connection
LJ72GF15-T2	-	-	-	-	-	-	-	-

■CC-Link IE Field Network Ethernet adapter module

Model name	Target software	Connection type						
		Bus connection	Direct CPU connection (serial)	Serial communication connection	Ethernet connection	CC-Link IE TSN connection	CC-Link IE controller network connection	CC-Link IE field network connection
NZ2GF-ETB	GX Works2	-	-	-	GT27 GT25 GT23 GT21 07W GT21 04R GT21 03P 04P ET/R4 GS25 GS21	-	-	-

■CNC

Model name	Target software	Connection type						
		Bus connection	Direct CPU connection (serial)	Serial communication connection	Ethernet connection	CC-Link IE TSN connection	CC-Link IE controller network connection	CC-Link IE field network connection
CNC C70(Q173NCCPU)	NC Configurator2	GT27 GT25 *1	-	-	GT27 GT25 GT23 GS25 *2	-	-	-
MELDAS C6/C64	-	-	-	-	-	-	-	-

*1 GT25-W, GT2505-V is not supported.

*2 Use the serial port of QCPU in the multiple CPU system since Q173NCCPU has no direct coupled I/F.

■Robot controller (Q Series)

Model name	Target software	Connection type						
		Bus connection	Direct CPU connection (serial)	Serial communication connection	Ethernet connection	CC-Link IE TSN connection	CC-Link IE controller network connection	CC-Link IE field network connection
CRnQ-700(Q172DRCPU) CR750-Q(Q172DRCPU) CR751-Q(Q172DRCPU)	RT ToolBox2 RT ToolBox3	GT27 GT25 *1	GT27 GT25 GT23 GT21 07W GT21 05Q GT21 04R GT21 03P 04P R4 GT21 03P 04P R2 GS25 GS21 *2	-	GT27 GT25 GT23 GT21 07W GT21 04R GT21 03P 04P ET/R4 GS25 GS21	-	-	-
CR800-Q(Q172DSRCPU)	RT ToolBox3							
CRnD-700 CR750-D CR751-D	RT ToolBox2 RT ToolBox3	-	-	-	GT27 GT25 GT23 GS25	-	-	-

*1 GT25-W, GT2505-V is not supported.

*2 Use the serial port of QCPU in the multiple CPU system since CRnQ-700 and CR800-Q (Q172DSRCPU) have no direct coupled I/F.

■MELIPC

Model name	Target software	Connection type						
		Bus connection	Direct CPU connection (serial)	Serial communication connection	Ethernet connection	CC-Link IE TSN connection	CC-Link IE controller network connection	CC-Link IE field network connection
MI5122-VW	MI Configurator	-	-	-	GT27 GT25 GT23 GT21 07W GT21 04R GT21 03P 04P ET/R4 GS25 GS21	-	-	-

■FR-A500(L), FR-F500(L), FR-V500(L), FR-E500, FR-S500(E), FR-F500J

Model name	Target software	Connection type						
		Bus connection	Direct CPU connection (serial)	Serial communication connection	Ethernet connection	CC-Link IE TSN connection	CC-Link IE controller network connection	CC-Link IE field network connection
FR-A5□0(L)	FR Configurator	-	GT27 GT25 GT23 GS25	-	-	-	-	-
FR-F5□0(L)								
FR-V5□0(L)								
FR-E5□0(C) FR-E5□0S FR-E5□0W								
FR-S5□0(E)(-R)(-C) FR-S5□0S(E)(-R) FR-S5□0W(E)(-R)								
FR-F5□0J(F)								

■FR-D700, FR-F700PJ, FR-E700, FR-A700, FR-F700, FR-F700P

Model name	Target software	Connection type						
		Bus connection	Direct CPU connection (serial)	Serial communication connection	Ethernet connection	CC-Link IE TSN connection	CC-Link IE controller network connection	CC-Link IE field network connection
FR-D7□0 FR-D7□0S FR-D7□0W	FR Configurator	-	GT27 GT25 GT23 GS25	-	-	-	-	-
FR-F7□0PJ(F)								
FR-E7□0 FR-E7□0S FR-E7□0W								
FR-E7□0-NE	FR Configurator2 *1	-	-	-	GT27 GT25 GT23 GT21 07W GT21 04R GT21 03P 04P ET/R4 GS25 GS21 *2	-	-	-
FR-A7□0	FR Configurator	-	GT27 GT25 GT23 GS25	-	-	-	-	-
FR-F7□0								
FR-F7□0P								

*1 For connection to the inverter through the Ethernet port built in the MELSEC iQ-R series CPU, use FR Configurator2 Ver.1.16S or later.
*2 Set the port number that supports the UDP connection (5000, 5001, 5006, or 5008) for the communication port setting of the inverter.

■FR-A800

Model name	Target software	Connection type						
		Bus connection	Direct CPU connection (serial)	Serial communication connection	Ethernet connection	CC-Link IE TSN connection	CC-Link IE controller network connection	CC-Link IE field network connection
FR-A8□0 FR-A8□2 FR-A8□6	FR Configurator2 *1	-	GT27 GT25 GT23 GT2107W GT2105Q GT2104R GT2103P 2104P ET/R4 GT2103P 2104P R4 GS25 GS21	-	-	-	-	-
FR-A8□0-E FR-A8□2-E FR-A8□6-E	FR Configurator2 *1	-	GT27 GT25 GT23 GT2107W GT2105Q GT2104R GT2103P 2104P ET/R4 GT2103P 2104P R4 GS25 GS21	-	GT27 GT25 GT23 GT2107W GT2104R GT2103P 2104P ET/R4 GS25 GS21 *2	-	-	-
FR-A8□0-GF FR-A8□2-GF	FR Configurator2 *1	-	GT27 GT25 GT23 GT2107W GT2105Q GT2104R GT2103P 2104P ET/R4 GT2103P 2104P R4 GS25 GS21	-	-	-	-	-
FR-A8□0-GN FR-A8□2-GN	-	-	-	-	-	-	-	-

*1 For connection to the inverter through the Ethernet port built in the MELSEC iQ-R series CPU, use FR Configurator2 Ver.1.16S or later.
*2 Set the port number that supports the UDP connection (5000, 5001, 5006, or 5008) for the communication port setting of the inverter.

■FR-A800 Plus

Model name	Target software	Connection type						
		Bus connection	Direct CPU connection (serial)	Serial communication connection	Ethernet connection	CC-Link IE TSN connection	CC-Link IE controller network connection	CC-Link IE field network connection
FR-A8□0-CRN*3 FR-A8□2-CRN*3 FR-A8□0-R2R*3 FR-A8□2-R2R*3 FR-A8□0-LC*4	FR Configurator2 *1	-	GT27 GT25 GT23 GT21 07W GT21 05Q GT21 04R GT21 03P 04P ET/R4 GT21 03P 04P R4 GS25 GS21	-	-	-	-	-
FR-A8□0-E-CRN*3 FR-A8□2-E-CRN*3 FR-A8□0-E-R2R*3 FR-A8□2-E-R2R*3 FR-A8□0-E-LC*4	FR Configurator2 *1	-	GT27 GT25 GT23 GT21 07W GT21 05Q GT21 04R GT21 03P 04P ET/R4 GT21 03P 04P R4 GS25 GS21	-	GT27 GT25 GT23 GT21 07W GT21 04R GT21 03P 04P ET/R4 GS25 GS21 *2	-	-	-

*1 For connection to the inverter through the Ethernet port built in the MELSEC iQ-R series CPU, use FR Configurator2 Ver.1.16S or later.
*2 Set the port number that supports the UDP connection (5000, 5001, 5006, or 5008) for the communication port setting of the inverter.
*3 Use FR Configurator2 Version 1.16S or later.
*4 Use FR Configurator2 Version 1.19V or later.

■FR-F800

Model name	Target software	Connection type						
		Bus connection	Direct CPU connection (serial)	Serial communication connection	Ethernet connection	CC-Link IE TSN connection	CC-Link IE controller network connection	CC-Link IE field network connection
FR-F8□0 FR-F8□2 FR-F8□6	FR Configurator2 *1	-	GT27 GT25 GT23 GT21 07W GT21 05Q GT21 04R GT21 03P 04P ET/R4 GT21 03P 04P R4 GS25 GS21	-	-	-	-	-
FR-F8□0-E FR-F8□2-E	FR Configurator2 *1	-	GT27 GT25 GT23 GT21 07W GT21 05Q GT21 04R GT21 03P 04P ET/R4 GT21 03P 04P R4 GS25 GS21	-	GT27 GT25 GT23 GT21 07W GT21 04R GT21 03P 04P ET/R4 GS25 GS21 *2	-	-	-

*1 For connection to the inverter through the Ethernet port built in the MELSEC iQ-R series CPU, use FR Configurator2 Ver.1.16S or later.
*2 Set the port number that supports the UDP connection (5000, 5001, 5006, or 5008) for the communication port setting of the inverter.

■FR-E800

Model name	Target software	Connection type						
		Bus connection	Direct CPU connection (serial)	Serial communication connection	Ethernet connection	CC-Link IE TSN connection	CC-Link IE controller network connection	CC-Link IE field network connection
FR-E8□0	FR Configurator2 *1*2	-	GT27 GT25 GT23 GT21 07W GT21 05Q GT21 04R GT21 03P 04P ET/R4 GT21 03P 04P R4 GS25 GS21	-	-	-	-	-
FR-E8□0-E	FR Configurator2 *1*2	-	-	-	GT27 GT25 GT23 GT21 07W GT21 04R GT21 03P 04P ET/R4 GS25 GS21 *3	-	-	-

*1 For connection to the inverter through the Ethernet port built in the MELSEC iQ-R series CPU, use FR Configurator2 Ver.1.16S or later.
*2 Use FR Configurator2 Version 1.19V or later.
*3 Set the port number that supports the UDP connection (5000, 5001, 5006, or 5008) for the communication port setting of the inverter.

■Sensorless servo

Model name	Target software	Connection type						
		Bus connection	Direct CPU connection (serial)	Serial communication connection	Ethernet connection	CC-Link IE TSN connection	CC-Link IE controller network connection	CC-Link IE field network connection
FR-E7□0EX	FR Configurator	-	GT27 GT25 GT23 GT21 07W GT21 05Q GT21 04R GT21 03P 04P ET/R4 GT21 03P 04P R4 GS25 GS21	-	-	-	-	-

■MELIPM

Model name	Target software	Connection type						
		Bus connection	Direct CPU connection (serial)	Serial communication connection	Ethernet connection	CC-Link IE TSN connection	CC-Link IE controller network connection	CC-Link IE field network connection
MD-CX522-□K(-A0)	FR Configurator	-	GT27 GT25 GT23 GT21 07W GT21 05Q GT21 04R GT21 03P 04P ET/R4 GT21 03P 04P R4 GS25 GS21	-	-	-	-	-

■MELSERVO

Model name	Target software	Connection type						
		Bus connection	Direct CPU connection (serial)	Serial communication connection	Ethernet connection	CC-Link IE TSN connection	CC-Link IE controller network connection	CC-Link IE field network connection
MR-J2S-□A MR-J2S-□CP MR-J2S-□CL	-	-	-	-	-	-	-	-
MR-J2M-P8A MR-J2M-□DU	-	-	-	-	-	-	-	-
MR-J3-□A MR-J3-□T	-	-	-	-	-	-	-	-
MR-J3-□B *1*2	MR Configurator	GT27 GT25 *3	GT27 GT25 GT23 GS25	-	-	-	-	-
	MR Configurator2	GT27 GT25 *3	GT27 GT25 GT23 GS25	-	GT27 GT25 GT23 GS25	-	-	-
MR-J4-□A MR-J4-□A-RJ MR-JE-□A	-	-	-	-	-	-	-	-
MR-J4-□B *1*2 MR-J4-□B-RJ *1*2 MR-J4W2-□B *1*2 MR-J4W3-□B *1*2	MR Configurator2	GT27 GT25 *3	GT27 GT25 GT23 GS25	-	GT27 GT25 GT23 GS25	-	-	-
MR-JE-□B	-	-	-	-	-	-	-	-

*1 A motion controller is required between the GOT and PLC in bus connection.
*2 A motion controller is required between the GOT and PLC in direct CPU connection (serial).
*3 GT25-W, GT2505-V is not supported.

When connecting the GOT and PC by serial

■MELSEC iQ-R Series

Model name	Target software	Connection type						
		Bus connection	Direct CPU connection (serial)	Serial communication connection	Ethernet connection	CC-Link IE TSN connection	CC-Link IE controller network connection	CC-Link IE field network connection
R00CPU *1 R01CPU *1 R02CPU *1 R04CPU R08CPU R16CPU R32CPU R120CPU	GX Works3*6 MX Component MX Sheet	-	-	GT21 07W, GT21 05Q, GT21 04R, GT21 03P 04P R4, GT21 03P 04P R2, GS21	GT21 07W, GT21 04R, GS21	-	-	-
R08PCPU R16PCPU R32PCPU R120PCPU								
R04ENCPU *2 R08ENCPU *2 R16ENCPU *2 R32ENCPU *2 R120ENCPU *2								
R08SFCPU *2*3 R16SFCPU *2*3 R32SFCPU *2*3 R120SFCPU *2*3	GX Works3 MX Component MX Sheet							
R08PSFCPU *4 R16PSFCPU *4 R32PSFCPU *4 R120PSFCPU *4	GX Works3 *5	-	-	-	GT21 07W, GT21 04R, GS21	-	-	-

*1 For R00CPU, R01CPU, R02CPU, use GX Works3 Ver.1.040S and later.
*2 Please use the MX Component Version 4.11M or later.
MX Sheet, please use the MX Component (Version 4.11M or later).
*3 Mount a safety function module R6SFM next to the RnSFCPU on the base unit.
The RnSFCPU and the safety function module R6SFM must have the same pair version.
If their pair versions differ, the RnSFCPU does not operate.
*4 Mount a SIL2 function module R6PSFM and a redundant function module R6RFM next to RnPSFCPU on the base unit.
*5 Use GX Works3 Version 1.050C or later.
*6 For connection through a servo amplifier, the FA transparent function is not supported.

■Motion CPU (MELSEC iQ-R Series)

Model name	Target software	Connection type						
		Bus connection	Direct CPU connection (serial)	Serial communication connection	Ethernet connection	CC-Link IE TSN connection	CC-Link IE controller network connection	CC-Link IE field network connection
R16MTCPU R32MTCPU R64MTCPU	-	-	-	-	-	-	-	-

■C controller module (MELSEC iQ-R Series)

Model name	Target software	Connection type						
		Bus connection	Direct CPU connection (serial)	Serial communication connection	Ethernet connection	CC-Link IE TSN connection	CC-Link IE controller network connection	CC-Link IE field network connection
R12CCPU-V	-	-	-	-	-	-	-	-

■MELSECWinCPU (MELSEC iQ-R Series)

Model name	Target software	Connection type						
		Bus connection	Direct CPU connection (serial)	Serial communication connection	Ethernet connection	CC-Link IE TSN connection	CC-Link IE controller network connection	CC-Link IE field network connection
R102WCPU-W	-	-	-	-	-	-	-	-

■CNC C80

Model name	Target software	Connection type						
		Bus connection	Direct CPU connection (serial)	Serial communication connection	Ethernet connection	CC-Link IE TSN connection	CC-Link IE controller network connection	CC-Link IE field network connection
R16NCCPU-S1	-	-	-	-	-	-	-	-

■Robot controller (MELSEC iQ-R Series)

Model name	Target software	Connection type						
		Bus connection	Direct CPU connection (serial)	Serial communication connection	Ethernet connection	CC-Link IE TSN connection	CC-Link IE controller network connection	CC-Link IE field network connection
CR800-R(R16RTCPU)	RT ToolBox3	-	-	-	GT21 07W GT21 04R GS21	-	-	-
CR800-D	RT ToolBox3	-	-	-	GT21 07W GT21 04R GS21	-	-	-

■CC-Link IE Field Network head module

Model name	Target software	Connection type						
		Bus connection	Direct CPU connection (serial)	Serial communication connection	Ethernet connection	CC-Link IE TSN connection	CC-Link IE controller network connection	CC-Link IE field network connection
RJ72GF15-T2	GX Works3	-	-	GT21 07W, GT21 05Q, GT21 04R, GT21 03P 04P R4, GT21 03P 04P R2, GS21	GT21 07W, GT21 04R, GS21	-	-	-

■MELSEC iQ-F Series

Model name	Target software	Connection type						
		Bus connection	Direct CPU connection (serial)	Serial communication connection	Ethernet connection	CC-Link IE TSN connection	CC-Link IE controller network connection	CC-Link IE field network connection
FX5U FX5UC	GX Works3 *1*4 MX Component *2*3 MX Sheet *2*3	-	GT21 07W, GT21 05Q, GT21 04R, GT21 03P 04P R4, GT21 03P 04P R2, GS21	-	GT21 07W, GT21 04R, GS21	-	-	-
FX5UJ	-	-	-	-	-	-	-	-
FX5S	-	-	-	-	-	-	-	-

*1 Use FX5-ENET Version 1.240 or later.
*2 The FA transparent through FX5-ENET is not supported.
*3 Please use the MX Component Version 4.11M or later.
MX Sheet, please use the MX Component (Version 4.11M or later).
*4 For connection through a servo amplifier, the FA transparent function is not supported.

■MELSEC-Q (Q mode)

Model name	Target software	Connection type						
		Bus connection	Direct CPU connection (serial)	Serial communication connection	Ethernet connection	CC-Link IE TSN connection	CC-Link IE controller network connection	CC-Link IE field network connection
Q00JCPU Q00CPU Q01CPU Q02CPU Q02HCPU Q06HCPU Q12HCPU Q25HCPU	GX Works2 GX Developer GX Configurator PX Developer MX Component MX Sheet	-	GT21 07W, GT21 05Q, GT21 04R, GT21 03P 04P R4, GT21 03P 04P R2, GS21	GT21 07W, GT21 05Q, GT21 04R, GT21 03P 04P R4, GT21 03P 04P R2, GS21	GT21 07W, GT21 04R, GS21	-	-	-
Q02PHCPU Q06PHCPU Q12PHCPU Q25PHCPU	-	-	-	-	-	-	-	-
Q12PRHCPU (Main base) Q25PRHCPU (Main base)	-	-	-	-	-	-	-	-
Q12PRHCPU (Extension base) Q25PRHCPU (Extension base)	-	-	-	-	-	-	-	-
Q00UJCPU Q00UJCPU-S8 Q00UCPU Q01UCPU Q02UCPU Q03UDCPU Q04UDHCPU Q06UDHCPU Q10UDHCPU Q13UDHCPU Q20UDHCPU Q26UDHCPU	GX Works2 GX Developer GX Configurator PX Developer MX Component MX Sheet	-	GT21 07W, GT21 05Q, GT21 04R, GT21 03P 04P R4, GT21 03P 04P R2, GS21	GT21 07W, GT21 05Q, GT21 04R, GT21 03P 04P R4, GT21 03P 04P R2, GS21	GT21 07W, GT21 04R, GS21	-	-	-
Q03UDECPU Q04UDEHCPU Q06UDEHCPU Q10UDEHCPU Q13UDEHCPU Q20UDEHCPU Q26UDEHCPU Q50UDEHCPU Q100UDEHCPU	GX Works2 GX Developer GX Configurator PX Developer MX Component MX Sheet	-	GT21 07W, GT21 05Q, GT21 04R, GT21 03P 04P R4, GT21 03P 04P R2, GS21 *2	GT21 07W, GT21 05Q, GT21 04R, GT21 03P 04P R4, GT21 03P 04P R2, GS21	GT21 07W, GT21 04R, GS21	-	-	-
Q03UDVCPU *1 Q04UDVCPU *1 Q06UDVCPU *1 Q13UDVCPU *1 Q26UDVCPU *1	GX Works2*3 GX Developer GX Configurator PX Developer MX Component MX Sheet							

*1 CPU Module Logging Configuration Tool and GX LogViewer are supported.
*2 Use the serial port of QCPU in the multiple CPU system, since the CPU has no direct coupled I/F.
*3 For connection through a servo amplifier, the FA transparent function is not supported.

■C Controller module (Q Series)

Model name	Target software	Connection type						
		Bus connection	Direct CPU connection (serial)	Serial communication connection	Ethernet connection	CC-Link IE TSN connection	CC-Link IE controller network connection	CC-Link IE field network connection
Q12DCCPU-V	GX Works2 GX Developer MX Component MX Sheet	-	GT21 07W, GT21 05Q, GT21 04R, GT21 03P 04P R4, GT21 03P 04P R2, GS21 *1	-	GT21 07W, GT21 04R, GS21	-	-	-
Q24DHCCPU-V/VG Q24DHCCPU-LS Q26DHCCPU-LS	GX Works2 GX Developer MX Component MX Sheet Setting/Monitoring tool for C Controller module	-	GT21 07W, GT21 05Q, GT21 04R, GT21 03P 04P R4, GT21 03P 04P R2, GS21 *1	-	GT21 07W, GT21 04R, GS21	-	-	-

*1 Use the serial port of QCPU in the multiple CPU system since Q12DCCPU-V1/VG and Q24DHCCPU-V/VG have no direct coupled I/F.

■MELSEC-QS

Model name	Target software	Connection type						
		Bus connection	Direct CPU connection (serial)	Serial communication connection	Ethernet connection	CC-Link IE TSN connection	CC-Link IE controller network connection	CC-Link IE field network connection
QS001CPU	-	-	-	-	-	-	-	-

■MELSEC-L

Model name	Target software	Connection type						
		Bus connection	Direct CPU connection (serial)	Serial communication connection	Ethernet connection	CC-Link IE TSN connection	CC-Link IE controller network connection	CC-Link IE field network connection
L02CPU L06CPU L26CPU L26CPU-BT L06CPU-P L26CPU-P L02CPU-P L26CPU-PBT	GX Works2 *1*2 GX Developer GX LogViewer MX Component MX Sheet CPU Module Logging Configuration Tool	-	GT21 07W, GT21 05Q, GT21 04R, GT21 03P 04P R4, GT21 03P 04P R2, GS21	GT21 07W, GT21 05Q, GT21 04R, GT21 03P 04P R4, GT21 03P 04P R2, GS21	GT21 07W, GT21 04R, GS21	-	-	-
L02SCPU L02SCPU-P	GX Works2 *1 GX Developer GX LogViewer MX Component MX Sheet CPU Module Logging Configuration Tool	-	GT21 07W, GT21 05Q, GT21 04R, GT21 03P 04P R4, GT21 03P 04P R2, GS21	GT21 07W, GT21 05Q, GT21 04R, GT21 03P 04P R4, GT21 03P 04P R2, GS21	GT21 07W, GT21 04R, GS21	-	-	-

*1 GX Works2 cannot be connected to the MELSEC-L series through the Ethernet port of the MELSEC iQ-R series built-in Ethernet port CPU.

*2 For connection through a servo amplifier, the FA transparent function is not supported.

■MELSEC-Q (A mode)

Model name	Target software	Connection type						
		Bus connection	Direct CPU connection (serial)	Serial communication connection	Ethernet connection	CC-Link IE TSN connection	CC-Link IE controller network connection	CC-Link IE field network connection
Q02CPU-A Q02HCPU-A Q06HCPU-A	GX Developer MX Component MX Sheet	-	GT21 07W, GT21 05Q, GT21 04R, GT21 03P 04P R4, GT21 03P 04P R2, GS21	GT21 07W, GT21 05Q, GT21 04R, GT21 03P 04P R4, GT21 03P 04P R2, GS21	GT21 07W, GT21 04R, GS21	-	-	-

■MELSEC-QnA(QnACPU)

Model name	Target software	Connection type						
		Bus connection	Direct CPU connection (serial)	Serial communication connection	Ethernet connection	CC-Link IE TSN connection	CC-Link IE controller network connection	CC-Link IE field network connection
Q2ACPU Q2ACPU-S1 Q3ACPU Q4ACPU	GX Developer MX Component MX Sheet	-	GT21 07W, GT21 05Q, GT21 04R, GT21 03P 04P R4, GS21	GT21 07W, GT21 05Q, GT21 04R, GT21 03P 04P R4, GS21	GT21 07W, GT21 04R, GS21	-	-	-
Q4ARCPU	-	-	-	-	-	-	-	-

■MELSEC-QnA(QnASCPU)

Model name	Target software	Connection type						
		Bus connection	Direct CPU connection (serial)	Serial communication connection	Ethernet connection	CC-Link IE TSN connection	CC-Link IE controller network connection	CC-Link IE field network connection
Q2ASCPU Q2ASCPU-S1 Q2ASHCPU Q2ASHCPU-S1	GX Developer MX Component MX Sheet	-	GT21 07W, GT21 05Q, GT21 04R, GT21 03P 04P R4, GS21	-	-	-	-	-

■MELSEC-A(AnCPU)

Model name	Target software	Connection type						
		Bus connection	Direct CPU connection (serial)	Serial communication connection	Ethernet connection	CC-Link IE TSN connection	CC-Link IE controller network connection	CC-Link IE field network connection
A2UCPU A2UCPU-S1	GX Developer MX Component MX Sheet	-	GT21 07W, GT21 05Q, GT21 04R, GT21 03P 04P R4, GS21	-	-	-	-	-
A3UCPU								
A4UCPU								
A2ACPU A2ACPUP21 A2ACPUR21 A2ACPU-S1 A2ACPUP21-S1 A2ACPUR21-S1								
A3ACPU A3ACPUP21 A3ACPUR21								
A1NCPU A1NCPUP21 A1NCPUR21								
A2NCPU A2NCPUP21 A2NCPUR21 A2NCPU-S1 A2NCPUP21-S1 A2NCPUR21-S1								
A3NCPU A3NCPUP21 A3NCPUR21								

■MELSEC-A(AnSCPU)

Model name	Target software	Connection type						
		Bus connection	Direct CPU connection (serial)	Serial communication connection	Ethernet connection	CC-Link IE TSN connection	CC-Link IE controller network connection	CC-Link IE field network connection
A2USCPU A2USCPU-S1 A2USHCPU-S1	GX Developer MX Component MX Sheet	-	GT21 07W, GT21 05Q, GT21 04R, GT21 03P 04P R4, GS21	-	-	-	-	-
A1SCPU A1SCPUC24-R2 A1SHCPU								
A2SCPU A2SCPU-S1 A2SHCPU A2SHCPU-S1								
A1SJCPU A1SJCPU-S3 A1SJHCPU								

■MELSEC-A

Model name	Target software	Connection type						
		Bus connection	Direct CPU connection (serial)	Serial communication connection	Ethernet connection	CC-Link IE TSN connection	CC-Link IE controller network connection	CC-Link IE field network connection
A0J2HCPU A0J2HCPUP21 A0J2HCPUR21 A0J2HCPU-DC24	GX Developer MX Component MX Sheet	-	GT21 07W, GT21 05Q, GT21 04R, GT21 03P 04P R4, GS21	-	-	-	-	-
A2CCPU A2CCPUP21 A2CCPUR21								
A2CCPUC24 A2CCPUC24-PRF								
A2CJCPU-S3								
A1FXCPU								

■Motion CPU (Q Series)

Model name	Target software	Connection type						
		Bus connection	Direct CPU connection (serial)	Serial communication connection	Ethernet connection	CC-Link IE TSN connection	CC-Link IE controller network connection	CC-Link IE field network connection
Q172CPU Q173CPU Q172CPUN Q173CPUN	MT Developer	-	GT21 07W, GT21 05Q, GT21 04R, GT21 03P 04P R4, GT21 03P 04P R2, GS21	-	-	-	-	-
Q172HCPU Q173HCPU	MT Developer MR Configurator	-	GT21 07W, GT21 05Q, GT21 04R, GT21 03P 04P R4, GT21 03P 04P R2, GS21 *1	-	-	-	-	-
Q172DCPU Q173DCPU Q172DCPU-S1 Q173DCPU-S1 Q172DSCPU Q173DSCPU	MT Works2	-	GT21 07W, GT21 05Q, GT21 04R, GT21 03P 04P R4, GT21 03P 04P R2, GS21 *2	-	GT21 07W, GT21 04R, GS21	-	-	-
Q170MCPU Q170MSCPU Q170MSCPU-S1	MT Works2 GX Works2	-	GT21 07W, GT21 05Q, GT21 04R, GT21 03P 04P R4, GT21 03P 04P R2, GS21	-	GT21 07W, GT21 04R, GS21	-	-	-

*1 Use the serial port of QCPU in the multiple CPU system since only the USB port is available as the direct coupled I/F for Q172H/Q173HCPU.

*2 Use the serial port of QCPU in the multiple CPU system since Q172D/Q173DCPU has no direct coupled I/F.

■Motion CPU (A Series)

Model name	Target software	Connection type						
		Bus connection	Direct CPU connection (serial)	Serial communication connection	Ethernet connection	CC-Link IE TSN connection	CC-Link IE controller network connection	CC-Link IE field network connection
A273UCPU A273UHCPU A273UHCPU-S3 A373UCPU A373UCPU-S3	-	-	-	-	-	-	-	-
A171SCPU A171SCPU-S3 A171SCPU-S3N A171SHCPU A171SHCPUN A172SHCPU A172SHCPUN A173UHCPU A173UHCPU-S1	-	-	-	-	-	-	-	-

■MELSEC-FX

Model name	Target software	Connection type						
		Bus connection	Direct CPU connection (serial)	Serial communication connection	Ethernet connection	CC-Link IE TSN connection	CC-Link IE controller network connection	CC-Link IE field network connection
FX0 FX0S FX0N FX1 FX2 FX2C	GX Works2 GX Developer MX Component MX Sheet	-	GT21 07W, GT21 05Q, GT21 04R, GT21 03P 04P R4, GS21	-	-	-	-	-
FX1S FX1N FX2N FX1NC FX2NC	GX Works2 GX Developer MX Component MX Sheet	-	GT21 07W, GT21 05Q, GT21 04R, GT21 03P 04P R4, GT21 03P 04P R2, GS21	-	-	-	-	-
FX3G(C) FX3S FX3GE	GX Developer FX Configurator-FP MX Component MX Sheet	-	GT21 07W, GT21 05Q, GT21 04R, GT21 03P 04P R4, GT21 03P 04P R2, GS21	-	-	-	-	-
	GX Works2	-	GT21 07W, GT21 05Q, GT21 04R, GT21 03P 04P R4, GT21 03P 04P R2, GS21	-	GT21 07W, GT21 04R, GS21	-	-	-
FX3U(C) *1	GX Developer FX Configurator-FP FX Configurator-EN-L FX Configurator-EN MX Component MX Sheet	-	GT21 07W, GT21 05Q, GT21 04R, GT21 03P 04P R4, GT21 03P 04P R2, GS21	-	-	-	-	-
	GX Works2	-	GT21 07W, GT21 05Q, GT21 04R, GT21 03P 04P R4, GT21 03P 04P R2, GS21	-	GT21 07W, GT21 04R, GS21	-	-	-

*1 For FX3U-ENET-L and FX3U-ENET, use a module with version 1.12 or later and serial number 1340001 or later.

■MELSEC-WS

Model name	Target software	Connection type						
		Bus connection	Direct CPU connection (serial)	Serial communication connection	Ethernet connection	CC-Link IE TSN connection	CC-Link IE controller network connection	CC-Link IE field network connection
WS0-CPU0 WS0-CPU1 WS0-CPU3	-	-	-	-	-	-	-	-

■MELSECNET/H Remote I/O station

Model name	Target software	Connection type						
		Bus connection	Direct CPU connection (serial)	Serial communication connection	Ethernet connection	CC-Link IE TSN connection	CC-Link IE controller network connection	CC-Link IE field network connection
QJ72LP25-25 QJ72LP25G QJ72BR15	-	-	-	-	-	-	-	-

■CC-Link IE Field Network head module

Model name	Target software	Connection type						
		Bus connection	Direct CPU connection (serial)	Serial communication connection	Ethernet connection	CC-Link IE TSN connection	CC-Link IE controller network connection	CC-Link IE field network connection
LJ72GF15-T2	-	-	-	-	-	-	-	-

■CC-Link IE Field Network Ethernet adapter module

Model name	Target software	Connection type						
		Bus connection	Direct CPU connection (serial)	Serial communication connection	Ethernet connection	CC-Link IE TSN connection	CC-Link IE controller network connection	CC-Link IE field network connection
NZ2GF-ETB	-	-	-	-	-	-	-	-

■CNC

Model name	Target software	Connection type						
		Bus connection	Direct CPU connection (serial)	Serial communication connection	Ethernet connection	CC-Link IE TSN connection	CC-Link IE controller network connection	CC-Link IE field network connection
CNC C70(Q173NCCPU)	-	-	-	-	-	-	-	-
MELDAS C6/C64	-	-	-	-	-	-	-	-

■Robot controller (Q Series)

Model name	Target software	Connection type						
		Bus connection	Direct CPU connection (serial)	Serial communication connection	Ethernet connection	CC-Link IE TSN connection	CC-Link IE controller network connection	CC-Link IE field network connection
CRnQ-700(Q172DRCPU) CR750-Q(Q172DRCPU) CR751-Q(Q172DRCPU)	RT ToolBox2 RT ToolBox3	-	-	-	GT21 07W GT21 04R GS21	-	-	-
CR800-Q(Q172DSRCPU)	-	-	-	-	-	-	-	-
CRnD-700 CR750-D CR751-D	-	-	-	-	-	-	-	-

■MELIPC

Model name	Target software	Connection type						
		Bus connection	Direct CPU connection (serial)	Serial communication connection	Ethernet connection	CC-Link IE TSN connection	CC-Link IE controller network connection	CC-Link IE field network connection
MI5122-VW	-	-	-	-	-	-	-	-

■FR-A500(L), FR-F500(L), FR-V500(L), FR-E500, FR-S500(E), FR-F500J

Model name	Target software	Connection type						
		Bus connection	Direct CPU connection (serial)	Serial communication connection	Ethernet connection	CC-Link IE TSN connection	CC-Link IE controller network connection	CC-Link IE field network connection
FR-A5□0(L)	-	-	-	-	-	-	-	-
FR-F5□0(L)	-	-	-	-	-	-	-	-
FR-V5□0(L)	-	-	-	-	-	-	-	-
FR-E5□0(C) FR-E5□0S FR-E5□0W	-	-	-	-	-	-	-	-
FR-S5□0(E)(-R)(-C) FR-S5□0S(E)(-R) FR-S5□0W(E)(-R)	-	-	-	-	-	-	-	-
FR-F5□0J(F)	-	-	-	-	-	-	-	-

■FR-D700, FR-F700PJ, FR-E700, FR-A700, FR-F700, FR-F700P

Model name	Target software	Connection type						
		Bus connection	Direct CPU connection (serial)	Serial communication connection	Ethernet connection	CC-Link IE TSN connection	CC-Link IE controller network connection	CC-Link IE field network connection
FR-D7□0 FR-D7□0S FR-D7□0W	-	-	-	-	-	-	-	-
FR-F7□0PJ(F)	-	-	-	-	-	-	-	-
FR-E7□0 FR-E7□0S FR-E7□0W	-	-	-	-	-	-	-	-
FR-E7□0-NE	-	-	-	-	-	-	-	-
FR-A7□0	-	-	-	-	-	-	-	-
FR-F7□0	-	-	-	-	-	-	-	-
FR-F7□0P	-	-	-	-	-	-	-	-

■FR-A800

Model name	Target software	Connection type						
		Bus connection	Direct CPU connection (serial)	Serial communication connection	Ethernet connection	CC-Link IE TSN connection	CC-Link IE controller network connection	CC-Link IE field network connection
FR-A8□0 FR-A8□2 FR-A8□6	-	-	-	-	-	-	-	-
FR-A8□0-E FR-A8□2-E FR-A8□6-E	-	-	-	-	-	-	-	-
FR-A8□0-GF FR-A8□2-GF	-	-	-	-	-	-	-	-
FR-A8□0-GN FR-A8□2-GN	-	-	-	-	-	-	-	-

■FR-A800 Plus

Model name	Target software	Connection type						
		Bus connection	Direct CPU connection (serial)	Serial communication connection	Ethernet connection	CC-Link IE TSN connection	CC-Link IE controller network connection	CC-Link IE field network connection
FR-A8□0-CRN FR-A8□2-CRN FR-A8□0-R2R FR-A8□2-R2R FR-A8□0-LC	-	-	-	-	-	-	-	-
FR-A8□0-E-CRN FR-A8□2-E-CRN FR-A8□0-E-R2R FR-A8□2-E-R2R FR-A8□0-E-LC	-	-	-	-	-	-	-	-

■FR-F800

Model name	Target software	Connection type						
		Bus connection	Direct CPU connection (serial)	Serial communication connection	Ethernet connection	CC-Link IE TSN connection	CC-Link IE controller network connection	CC-Link IE field network connection
FR-F8□0 FR-F8□2 FR-F8□6	-	-	-	-	-	-	-	-
FR-F8□0-E FR-F8□2-E	-	-	-	-	-	-	-	-

■FR-E800

Model name	Target software	Connection type						
		Bus connection	Direct CPU connection (serial)	Serial communication connection	Ethernet connection	CC-Link IE TSN connection	CC-Link IE controller network connection	CC-Link IE field network connection
FR-E8□0	-	-	-	-	-	-	-	-
FR-E8□0-E	-	-	-	-	-	-	-	-

■Sensorless servo

Model name	Target software	Connection type						
		Bus connection	Direct CPU connection (serial)	Serial communication connection	Ethernet connection	CC-Link IE TSN connection	CC-Link IE controller network connection	CC-Link IE field network connection
FR-E7□0EX	-	-	-	-	-	-	-	-

■MELIPM

Model name	Target software	Connection type						
		Bus connection	Direct CPU connection (serial)	Serial communication connection	Ethernet connection	CC-Link IE TSN connection	CC-Link IE controller network connection	CC-Link IE field network connection
MD-CX522-□K(-A0)	-	-	-	-	-	-	-	-

■MELSERVO

Model name	Target software	Connection type						
		Bus connection	Direct CPU connection (serial)	Serial communication connection	Ethernet connection	CC-Link IE TSN connection	CC-Link IE controller network connection	CC-Link IE field network connection
MR-J2S-□A MR-J2S-□CP MR-J2S-□CL	-	-	-	-	-	-	-	-
MR-J2M-P8A MR-J2M-□DU	-	-	-	-	-	-	-	-
MR-J3-□A MR-J3-□T MR-J3-□B	-	-	-	-	-	-	-	-
MR-J4-□A MR-J4-□A-RJ MR-JE-□A	-	-	-	-	-	-	-	-
MR-J4-□B MR-J4-□B-RJ MR-J4W2-□B MR-J4W3-□B	-	-	-	-	-	-	-	-
MR-JE-□B	-	-	-	-	-	-	-	-

When connecting the GOT and the personal computer by Ethernet or wireless LAN

■MELSEC iQ-R Series

Model name	Target software	Connection type						
		Bus connection	Direct CPU connection (serial)	Serial communication connection	Ethernet connection	CC-Link IE TSN connection *9	CC-Link IE controller network connection	CC-Link IE field network connection
R00CPU *1 R01CPU *1 R02CPU *1 R04CPU R08CPU R16CPU R32CPU R120CPU	GX Works3 *10 MX Component *5 MX Sheet *5 CPU Module Logging Configuration Tool	-	-	GT27 GT25 GT23 GT21 07W GT21 04R GT21 03P 04P ET/R4 GS25 GS21 *7	GT27 GT25 GS25	GT27 GT25 *8	GT27 GT25 *8	GT27 GT25 *8
R08PCPU R16PCPU R32PCPU R120PCPU						-		
R04ENCPU *2 R08ENCPU *2 R16ENCPU *2 R32ENCPU *2 R120ENCPU *2						GT27 GT25 *8		
R08SFCPU *2*3 R16SFCPU *2*3 R32SFCPU *2*3 R120SFCPU *2*3								
R08PSFCPU *4 R16PSFCPU *4 R32PSFCPU *4 R120PSFCPU *4	GX Works3 *6	-	-	-	GT27 GT25 GS25	-	GT27 GT25 *8	GT27 GT25 *8

*1 For R00CPU, R01CPU, R02CPU, use GX Works3 Ver.1.040S and later.
*2 Please use the MX Component Version 4.11M or later.
MX Sheet, please use the MX Component (Version 4.11M or later).
*3 Mount a safety function module R6SFM next to the RnSFCPU on the base unit.
The RnSFCPU and the safety function module R6SFM must have the same pair version.
If their pair versions differ, the RnSFCPU does not operate.
*4 Mount a SIL2 function module R6PSFM and a redundant function module R6RFM next to RnPSFCPU on the base unit.
*5 MX Component and MX Sheet do not support the FA transparent function through an Ethernet network, CC-Link IE Controller Network, and CC-Link IE Field Network.
*6 Use GX Works3 Version 1.050C or later.
*7 GT21 and GS21 do not support the wireless LAN connection.
*8 GT25-W, GT2505-V is not supported.
*9 When connecting the GOT and the personal computer by wireless LAN, the FA transparent function using the CC-Link IE TSN connection is not supported.
*10 GX Works3 Ver.1.080J or later is required to use the FA transparent function using the CC-Link IE TSN connection.

■Motion CPU (MELSEC iQ-R Series)

Model name	Target software	Connection type						
		Bus connection	Direct CPU connection (serial)	Serial communication connection	Ethernet connection	CC-Link IE TSN connection	CC-Link IE controller network connection	CC-Link IE field network connection
R16MTCPU R32MTCPU R64MTCPU	MT Works2 *1	-	-	-	GT27 GT25 GS25	-	-	-
	MX Component *1 MX Sheet *1	-	-	GT27 GT25 GT23 GT21 07W GT21 04R GT21 03P 04P ET/R4 GS25 GS21 *2	-	-	-	-

*1 GT2505-V does not support the FA transparent function through an Ethernet network.
*2 GT21 and GS21 do not support the wireless LAN connection.

■C controller module (MELSEC iQ-R Series)

Model name	Target software	Connection type						
		Bus connection	Direct CPU connection (serial)	Serial communication connection	Ethernet connection	CC-Link IE TSN connection	CC-Link IE controller network connection	CC-Link IE field network connection
R12CCPU-V	CW Configurator*1*2	-	-	GT27 GT25 GT23 GT21 07W GT21 04R GT21 03P 04P ET/R4 GS25 GS21	-	-	GT27 GT25 *3	GT27 GT25 *3

*1 Use CW Configurator Ver.1.013P or later.
*2 CW Configurator does not support wireless LAN connection.
*3 Not available to GT25-W and GT2505-V.

■MELSECWinCPU (MELSEC iQ-R Series)

Model name	Target software	Connection type						
		Bus connection	Direct CPU connection (serial)	Serial communication connection	Ethernet connection	CC-Link IE TSN connection	CC-Link IE controller network connection	CC-Link IE field network connection
R102WCPU-W	CW Configurator*1*2	-	-	GT27 GT25 GT23 GT21 07W GT21 04R GT21 03P 04P ET/R4 GS25 GS21	-	-	GT27 GT25 *3	-

*1 Use CW Configurator Ver.1.013P or later.
*2 CW Configurator does not support wireless LAN connection.
*3 Not available to GT25-W and GT2505-V.

■CNC C80

Model name	Target software	Connection type						
		Bus connection	Direct CPU connection (serial)	Serial communication connection	Ethernet connection	CC-Link IE TSN connection	CC-Link IE controller network connection	CC-Link IE field network connection
R16NCCPU-S1	-	-	-	-	-	-	-	-

■Robot controller (MELSEC iQ-R Series)

Model name	Target software	Connection type						
		Bus connection	Direct CPU connection (serial)	Serial communication connection	Ethernet connection	CC-Link IE TSN connection	CC-Link IE controller network connection	CC-Link IE field network connection
CR800-R(R16RTCPU)	-	-	-	-	-	-	-	-
CR800-D	-	-	-	-	-	-	-	-

■CC-Link IE Field Network head module

Model name	Target software	Connection type						
		Bus connection	Direct CPU connection (serial)	Serial communication connection	Ethernet connection	CC-Link IE TSN connection	CC-Link IE controller network connection	CC-Link IE field network connection
RJ72GF15-T2	GX Works3	-	-	GT27 GT25 GT23 GT21 07W GT21 04R GT21 03P 04P ET/R4 GS25 GS21 *1	GT27 GT25 GS25	-	GT27 GT25 *2	GT27 GT25 *2

*1 GT21 and GS21 do not support the wireless LAN connection.
*2 GT25-W, GT2505-V is not supported.

■MELSEC iQ-F Series

Model name	Target software	Connection type						
		Bus connection	Direct CPU connection (serial)	Serial communication connection	Ethernet connection	CC-Link IE TSN connection	CC-Link IE controller network connection	CC-Link IE field network connection
FX5U FX5UC	GX Works3 *1 MX Component *2*3*4 MX Sheet *2*3*4	-	GT27 GT25 GT23 GT21 07W GT21 04R GT21 03P 04P ET/R4 GS25 GS21 *6	-	GT27 GT25 GS25	-	-	GT27 GT25 *7
FX5UJ	GX Works3 *5	-	GT27 GT25 GT23 GT21 07W GT21 04R GT21 03P 04P ET/R4 GS25 GS21 *6	-	GT27 GT25 GS25	-	-	GT27 GT25 *7
FX5S	GX Works3*8	-	GT27 GT25 GT23 GT21 07W GT21 04R GT21 03P 04P ET/R4 GS25 GS21 *6	-	GT27 GT25 GS25	-	-	-

*1 Use FX5-ENET Version 1.240 or later.
*2 The FA transparent through FX5-ENET is not supported.
*3 Please use the MX Component Version 4.11M or later.
MX Sheet, please use the MX Component (Version 4.11M or later).
*4 MX Component and MX Sheet do not support the FA transparent function through an Ethernet network and CC-Link IE Field Network.
*5 Use GX Works3 Version 1.060N or later.
*6 GT21 and GS21 do not support the wireless LAN connection.
*7 GT25-W, GT2505-V is not supported.
*8 Use GX Works3 Version 1.080J or later.

■MELSEC-Q (Q mode)

Model name	Target software	Connection type						
		Bus connection	Direct CPU connection (serial)	Serial communication connection	Ethernet connection	CC-Link IE TSN connection	CC-Link IE controller network connection	CC-Link IE field network connection
Q00JCPU Q00CPU Q01CPU	GX Works2 MX Component *1*2 MX Sheet *1*2	GT27 GT25 *5	GT27 GT25 GT23 GT21 07W GT21 04R GS25 GS21 *4	GT27 GT25 GT23 GT21 07W GT21 04R GT21 03P 04P ET/R4 GS25 GS21 *4	GT27 GT25 GS25	-	GT27 GT25 *5	GT27 GT25 *5

Model name	Target software	Connection type						
		Bus connection	Direct CPU connection (serial)	Serial communication connection	Ethernet connection	CC-Link IE TSN connection	CC-Link IE controller network connection	CC-Link IE field network connection
Q02CPU Q02HCPU Q06HCPU Q12HCPU Q25HCPU	GX Works2 MX Component *1*2 MX Sheet *1*2	GT27 GT25 *5	GT27 GT25 GT23 GT21 07W GT21 04R GT21 03P 04P ET/R4 GS25 GS21 *4	GT27 GT25 GT23 GT21 07W GT21 04R GT21 03P 04P ET/R4 GS25 GS21 *4	GT27 GT25 GS25	-	GT27 GT25 *5	GT27 GT25 *5
Q02PHCPU Q06PHCPU Q12PHCPU Q25PHCPU	GX Works2 MX Component *1*2 MX Sheet *1*2	GT27 GT25 *5	GT27 GT25 GT23 GS25	GT27 GT25 GT23 GS25	GT27 GT25 GS25	-	GT27 GT25 *5	GT27 GT25 *5
Q12PRHCPU (Main base) Q25PRHCPU (Main base)	GX Works2 MX Component *1*2 MX Sheet *1*2	-	GT27 GT25 GS25	-	-	-	GT27 GT25 *5	GT27 GT25 *5
Q12PRHCPU (Extension base) Q25PRHCPU (Extension base)	-	-	-	-	-	-	-	-
Q00UJCPU Q00UJCPU-S8 Q00UCPU Q01UCPU Q02UCPU Q03UDCPU Q04UDHCPU Q06UDHCPU Q10UDHCPU Q13UDHCPU Q20UDHCPU Q26UDHCPU	GX Works2 MX Component *1*2 MX Sheet *1*2	GT27 GT25 *5	GT27 GT25 GT23 GT21 07W GT21 04R GT21 03P 04P ET/R4 GS25 GS21 *4	GT27 GT25 GT23 GT21 07W GT21 04R GT21 03P 04P ET/R4 GS25 GS21 *4	GT27 GT25 GS25	-	GT27 GT25 *5	GT27 GT25 *5
Q03UDECPU Q04UDEHCPU Q06UDEHCPU Q10UDEHCPU Q13UDEHCPU Q20UDEHCPU Q26UDEHCPU Q50UDEHCPU Q100UDEHCPU Q03UDVCPU Q04UDVCPU Q06UDVCPU Q13UDVCPU Q26UDVCPU	GX Works2 MX Component *1*2 MX Sheet *1*2	GT27 GT25 *5	GT27 GT25 GT23 GT21 07W GT21 04R GT21 03P 04P ET/R4 GS25 GS21 *3*4	GT27 GT25 GT23 GT21 07W GT21 04R GT21 03P 04P ET/R4 GS25 GS21 *4	GT27 GT25 GS25	-	GT27 GT25 *5	GT27 GT25 *5

*1 MX Component or MX Sheet does not support the FA transparent function through Ethernet connection, CC-Link IE Controller Network, CC-Link IE Field Network.
*2 GT2505-V does not support the FA transparent function through an Ethernet network.
*3 Use the serial port of QCPU in the multiple CPU system, since the CPU has no direct coupled I/F.
*4 GT21 and GS21 do not support the wireless LAN connection.
*5 GT25-W, GT2505-V is not supported.

■C controller module (Q Series)

Model name	Target software	Connection type						
		Bus connection	Direct CPU connection (serial)	Serial communication connection	Ethernet connection	CC-Link IE TSN connection	CC-Link IE controller network connection	CC-Link IE field network connection
Q12DCCPU-V	GX Works2 MX Component *1 MX Sheet *1	GT27 GT25 *4	GT27 GT25 GT23 GT21 07W GT21 04R GT21 03P 04P ET/R4 GS25 GS21 *2*3	-	-	-	GT27 GT25 *4	GT27 GT25 *4
Q24DHCCPU-V/VG Q24DHCCPU-LS Q26DHCCPU-LS	GX Works2 MX Component *1 MX Sheet *1	GT27 GT25 *4	GT27 GT25 GT23 GT21 07W GT21 04R GT21 03P 04P ET/R4 GS25 GS21 *2*3	-	-	-	GT27 GT25 *4	GT27 GT25 *4
	Setting/Monitoring tool for C Controller module	GT27 GT25 *4	GT27 GT25 GT23 GT21 07W GT21 04R GT21 03P 04P ET/R4 GS25 GS21 *2*3	-	-	-	-	-

*1 MX Component or MX Sheet does not support the FA transparent function through Ethernet connection, CC-Link IE Controller Network, CC-Link IE Field Network.
*2 Use the serial port of QCPU in the multiple CPU system since Q12DCCPU-V1 and Q24DHCCPU-V/VG have no direct coupled I/F.
*3 GT21 and GS21 do not support the wireless LAN connection.
*4 GT25-W, GT2505-V is not supported.

■MELSEC-QS

Model name	Target software	Connection type						
		Bus connection	Direct CPU connection (serial)	Serial communication connection	Ethernet connection	CC-Link IE TSN connection	CC-Link IE controller network connection	CC-Link IE field network connection
QS001CPU	-	-	-	-	-	-	-	-

■MELSEC-L

Model name	Target software	Connection type						
		Bus connection	Direct CPU connection (serial)	Serial communication connection	Ethernet connection	CC-Link IE TSN connection	CC-Link IE controller network connection	CC-Link IE field network connection
L02CPU L06CPU L26CPU L26CPU-BT L02CPU-P L06CPU-P L26CPU-P L26CPU-PBT L02SCPU L02SCPU-P	GX Works2 MX Component *1 MX Sheet *1	-	GT27 GT25 GT23 GT21 07W GT21 04R GT21 03P 04P ET/R4 GS25 GS21 *2	GT27 GT25 GT23 GT21 07W GT21 04R GT21 03P 04P ET/R4 GS25 GS21 *2	GT27 GT25 GS25	-	-	-

*1 MX Component and MX Sheet do not support the FA transparent function through an Ethernet network.
*2 GT21 and GS21 do not support the wireless LAN connection.

■MELSEC-Q (A mode)

Model name	Target software	Connection type						
		Bus connection	Direct CPU connection (serial)	Serial communication connection	Ethernet connection	CC-Link IE TSN connection	CC-Link IE controller network connection	CC-Link IE field network connection
Q02CPU-A Q02HCPU-A Q06HCPU-A	-	-	-	-	-	-	-	-

■MELSEC-QnA(QnACPU)

Model name	Target software	Connection type						
		Bus connection	Direct CPU connection (serial)	Serial communication connection	Ethernet connection	CC-Link IE TSN connection	CC-Link IE controller network connection	CC-Link IE field network connection
Q2ACPU Q2ACPU-S1 Q3ACPU Q4ACPU	-	-	-	-	-	-	-	-
Q4ARCPU	-	-	-	-	-	-	-	-

■MELSEC-QnA(QnASCPU)

Model name	Target software	Connection type						
		Bus connection	Direct CPU connection (serial)	Serial communication connection	Ethernet connection	CC-Link IE TSN connection	CC-Link IE controller network connection	CC-Link IE field network connection
Q2ASCPU Q2ASCPU-S1 Q2ASHCPU Q2ASHCPU-S1	-	-	-	-	-	-	-	-

■MELSEC-A(AnCPU)

Model name	Target software	Connection type						
		Bus connection	Direct CPU connection (serial)	Serial communication connection	Ethernet connection	CC-Link IE TSN connection	CC-Link IE controller network connection	CC-Link IE field network connection
A2UCPU A2UCPU-S1	-	-	-	-	-	-	-	-
A3UCPU	-	-	-	-	-	-	-	-
A4UCPU	-	-	-	-	-	-	-	-
A2ACPU A2ACPUP21 A2ACPUR21 A2ACPU-S1 A2ACPUP21-S1 A2ACPUR21-S1	-	-	-	-	-	-	-	-
A3ACPU A3ACPUP21 A3ACPUR21	-	-	-	-	-	-	-	-
A1NCPU A1NCPUP21 A1NCPUR21	-	-	-	-	-	-	-	-
A2NCPU A2NCPUP21 A2NCPUR21 A2NCPU-S1 A2NCPUP21-S1 A2NCPUR21-S1	-	-	-	-	-	-	-	-
A3NCPU A3NCPUP21 A3NCPUR21	-	-	-	-	-	-	-	-

■MELSEC-A(AnSCPU)

Model name	Target software	Connection type						
		Bus connection	Direct CPU connection (serial)	Serial communication connection	Ethernet connection	CC-Link IE TSN connection	CC-Link IE controller network connection	CC-Link IE field network connection
A2USCPU A2USCPU-S1 A2USHCPU-S1	-	-	-	-	-	-	-	-
A1SCPU A1SCPUC24-R2 A1SHCPU	-	-	-	-	-	-	-	-
A2SCPU A2SCPU-S1 A2SHCPU A2SHCPU-S1	-	-	-	-	-	-	-	-
A1SJCPU A1SJCPU-S3 A1SJHCPU	-	-	-	-	-	-	-	-

■MELSEC-A

Model name	Target software	Connection type						
		Bus connection	Direct CPU connection (serial)	Serial communication connection	Ethernet connection	CC-Link IE TSN connection	CC-Link IE controller network connection	CC-Link IE field network connection
A0J2HCPU A0J2HCPUP21 A0J2HCPUR21 A0J2HCPU-DC24	-	-	-	-	-	-	-	-
A2CCPU A2CCPUP21 A2CCPUR21	-	-	-	-	-	-	-	-
A2CCPUC24 A2CCPUC24-PRF	-	-	-	-	-	-	-	-
A2CJCPU-S3	-	-	-	-	-	-	-	-
A1FXCPU	-	-	-	-	-	-	-	-

■Motion CPU (Q Series)

Model name	Target software	Connection type						
		Bus connection	Direct CPU connection (serial)	Serial communication connection	Ethernet connection	CC-Link IE TSN connection	CC-Link IE controller network connection	CC-Link IE field network connection
Q172CPU Q173CPU Q172CPUN Q173CPUN	-	-	-	-	-	-	-	-
Q172HCPU Q173HCPU	-	-	-	-	-	-	-	-
Q172DCPU Q173DCPU Q172DCPU-S1 Q173DCPU-S1 Q172DSCPU Q173DSCPU	MT Works2	GT27 GT25 *4	GT27 GT25 GT23 GT21 07W GT21 04R GT21 03P 04P ET/R4 GS25 GS21 *1*3	-	-	-	-	-
Q170MCPU Q170MSCPU Q170MSCPU-S1	MT Works2 *2 GX Works2	GT27 GT25 *4	GT27 GT25 GT23 GT21 07W GT21 04R GT21 03P 04P ET/R4 GS25 GS21 *3	-	-	-	GT27 GT25 *4	GT27 GT25 *4

*1 Use the serial port of QCPU in the multiple CPU system since Q172D/Q173DCPU has no direct coupled I/F.
*2 MT Works2 does not support the FA transparent function through CC-Link IE Controller Network, CC-Link IE Field Network.
*3 GT21 and GS21 do not support the wireless LAN connection.
*4 GT25-W, GT2505-V is not supported.

■Motion CPU (A Series)

Model name	Target software	Connection type						
		Bus connection	Direct CPU connection (serial)	Serial communication connection	Ethernet connection	CC-Link IE TSN connection	CC-Link IE controller network connection	CC-Link IE field network connection
A273UCPU A273UHCPU A273UHCPU-S3 A373UCPU A373UCPU-S3	-	-	-	-	-	-	-	-
A171SCPU A171SCPU-S3 A171SCPU-S3N A171SHCPU A171SHCPUN A172SHCPU A172SHCPUN A173UHCPU A173UHCPU-S1	-	-	-	-	-	-	-	-

■MELSEC-FX

Model name	Target software	Connection type						
		Bus connection	Direct CPU connection (serial)	Serial communication connection	Ethernet connection	CC-Link IE TSN connection	CC-Link IE controller network connection	CC-Link IE field network connection
FX0 FX0S FX0N	GX Works2 MX Component MX Sheet	-	GT27 GT25 GT23 GT21 07W GT21 04R GT21 03P 04P ET/R4 GS25 GS21 *3	-	-	-	-	-
FX1 *1 FX2 *1 FX2C *1	GX Works2 MX Component MX Sheet	-	GT27 GT25 GT23 GT21 07W GT21 04R GS25 GS21 *3	-	-	-	-	-
FX1S FX1N FX2N FX1NC FX2NC	GX Works2 MX Component MX Sheet	-	GT27 GT25 GT23 GT21 07W GT21 04R GT21 03P 04P ET/R4 GS25 GS21 *3	-	-	-	-	-
FX3G(C) FX3S FX3GE FX3U(C) *2	GX Works2	-	GT27 GT25 GT23 GT21 07W GT21 04R GT21 03P 04P ET/R4 GS25 GS21 *3	-	GT27 GT25 GS25	-	-	-
	MX Component MX Sheet	-	GT27 GT25 GT23 GT21 07W GT21 04R GT21 03P 04P ET/R4 GS25 GS21 *3	-	-	-	-	-

*1 FX1, FX2, and FX2C cannot be connected with the Ethernet-connectable models of GT21-P.
*2 For FX3U-ENET-L and FX3U-ENET, use a module with version 1.12 or later and serial number 1340001 or later.
*3 GT21 and GS21 do not support the wireless LAN connection.

■MELSEC-WS

Model name	Target software	Connection type						
		Bus connection	Direct CPU connection (serial)	Serial communication connection	Ethernet connection	CC-Link IE TSN connection	CC-Link IE controller network connection	CC-Link IE field network connection
WS0-CPU0 WS0-CPU1 WS0-CPU3	-	-	-	-	-	-	-	-

■MELSECNET/H Remote I/O station

Model name	Target software	Connection type						
		Bus connection	Direct CPU connection (serial)	Serial communication connection	Ethernet connection	CC-Link IE TSN connection	CC-Link IE controller network connection	CC-Link IE field network connection
QJ72LP25-25 QJ72LP25G QJ72BR15	-	-	-	-	-	-	-	-

■CC-Link IE Field Network head module

Model name	Target software	Connection type						
		Bus connection	Direct CPU connection (serial)	Serial communication connection	Ethernet connection	CC-Link IE TSN connection	CC-Link IE controller network connection	CC-Link IE field network connection
LJ72GF15-T2	GX Works2	-	-	-	GT 27 GT 25 GS 25	-	-	-

■CC-Link IE Field Network Ethernet adapter module

Model name	Target software	Connection type						
		Bus connection	Direct CPU connection (serial)	Serial communication connection	Ethernet connection	CC-Link IE TSN connection	CC-Link IE controller network connection	CC-Link IE field network connection
NZ2GF-ETB	-	-	-	-	-	-	-	-

■CNC

Model name	Target software	Connection type						
		Bus connection	Direct CPU connection (serial)	Serial communication connection	Ethernet connection	CC-Link IE TSN connection	CC-Link IE controller network connection	CC-Link IE field network connection
CNC C70(Q173NCCPU)	-	-	-	-	-	-	-	-
MELDAS C6/C64	-	-	-	-	-	-	-	-

■Robot controller (Q Series)

Model name	Target software	Connection type						
		Bus connection	Direct CPU connection (serial)	Serial communication connection	Ethernet connection	CC-Link IE TSN connection	CC-Link IE controller network connection	CC-Link IE field network connection
CRnQ-700(Q172DRCPU) CR750-Q(Q172DRCPU) CR751-Q(Q172DRCPU)	-	-	-	-	-	-	-	-
CR800-Q(Q172DSRCPU)	-	-	-	-	-	-	-	-
CRnD-700 CR750-D CR751-D	-	-	-	-	-	-	-	-

■MELIPC

Model name	Target software	Connection type						
		Bus connection	Direct CPU connection (serial)	Serial communication connection	Ethernet connection	CC-Link IE TSN connection	CC-Link IE controller network connection	CC-Link IE field network connection
MI5122-VW	MI Configurator *1	-	-	-	GT27 GT25 GS25	-	-	-

*1 GT2505-V does not support the FA transparent function through an Ethernet network.

■FR-A500(L), FR-F500(L), FR-V500(L), FR-E500, FR-S500(E), FR-F500J

Model name	Target software	Connection type						
		Bus connection	Direct CPU connection (serial)	Serial communication connection	Ethernet connection	CC-Link IE TSN connection	CC-Link IE controller network connection	CC-Link IE field network connection
FR-A5□0(L)	-	-	-	-	-	-	-	-
FR-F5□0(L)	-	-	-	-	-	-	-	-
FR-V5□0(L)	-	-	-	-	-	-	-	-
FR-E5□0(C) FR-E5□0S FR-E5□0W	-	-	-	-	-	-	-	-
FR-S5□0(E)(-R)(-C) FR-S5□0S(E)(-R) FR-S5□0W(E)(-R)	-	-	-	-	-	-	-	-
FR-F5□0J(F)	-	-	-	-	-	-	-	-

■FR-D700, FR-F700PJ, FR-E700, FR-A700, FR-F700, FR-F700P

Model name	Target software	Connection type						
		Bus connection	Direct CPU connection (serial)	Serial communication connection	Ethernet connection	CC-Link IE TSN connection	CC-Link IE controller network connection	CC-Link IE field network connection
FR-D7□0 FR-D7□0S FR-D7□0W	-	-	-	-	-	-	-	-
FR-F7□0PJ(F)	-	-	-	-	-	-	-	-
FR-E7□0 FR-E7□0S FR-E7□0W	-	-	-	-	-	-	-	-
FR-E7□0-NE	FR Configurator2	-	-	-	GT27 GT25 GS25	-	-	-
FR-A7□0	-	-	-	-	-	-	-	-
FR-F7□0	-	-	-	-	-	-	-	-
FR-F7□0P	-	-	-	-	-	-	-	-

■FR-A800

Model name	Target software	Connection type						
		Bus connection	Direct CPU connection (serial)	Serial communication connection	Ethernet connection	CC-Link IE TSN connection	CC-Link IE controller network connection	CC-Link IE field network connection
FR-A8□0 FR-A8□2 FR-A8□6	FR Configurator2	-	GT27 GT25 GT23 GT21 07W GT21 05Q GT21 04R GT21 03P 04P ET/R4 GT21 03P 04P R4 GS25 GS21	-	-	-	-	-
FR-A8□0-E FR-A8□2-E FR-A8□6-E	FR Configurator2	-	GT27 GT25 GT23 GT21 07W GT21 05Q GT21 04R GT21 03P 04P ET/R4 GT21 03P 04P R4 GS25 GS21	-	GT27 GT25 GS25	-	-	-
FR-A8□0-GF FR-A8□2-GF	FR Configurator2	-	GT27 GT25 GT23 GT21 07W GT21 05Q GT21 04R GT21 03P 04P ET/R4 GT21 03P 04P R4 GS25 GS21	-	-	-	-	-
FR-A8□0-GN FR-A8□2-GN	-	-	-	-	-	-	-	-

■FR-A800 Plus

Model name	Target software	Connection type						
		Bus connection	Direct CPU connection (serial)	Serial communication connection	Ethernet connection	CC-Link IE TSN connection	CC-Link IE controller network connection	CC-Link IE field network connection
FR-A8□0-CRN FR-A8□2-CRN FR-A8□0-R2R FR-A8□2-R2R FR-A8□0-LC	-	-	-	-	-	-	-	-
FR-A8□0-E-CRN FR-A8□2-E-CRN FR-A8□0-E-R2R FR-A8□2-E-R2R FR-A8□0-E-LC	-	-	-	-	-	-	-	-

■FR-F800

Model name	Target software	Connection type						
		Bus connection	Direct CPU connection (serial)	Serial communication connection	Ethernet connection	CC-Link IE TSN connection	CC-Link IE controller network connection	CC-Link IE field network connection
FR-F8□0 FR-F8□2 FR-F8□6	FR Configurator2	-	GT27 GT25 GT23 GT21 07W GT21 05Q GT21 04R GT21 03P 04P ET/R4 GT21 03P 04P R4 GS25 GS21	-	-	-	-	-
FR-F8□0-E FR-F8□2-E	FR Configurator2	-	GT27 GT25 GT23 GT21 07W GT21 05Q GT21 04R GT21 03P 04P ET/R4 GT21 03P 04P R4 GS25 GS21	-	GT27 GT25 GS25	-	-	-

■FR-E800

Model name	Target software	Connection type						
		Bus connection	Direct CPU connection (serial)	Serial communication connection	Ethernet connection	CC-Link IE TSN connection	CC-Link IE controller network connection	CC-Link IE field network connection
FR-E8□0	FR Configurator2	-	GT27 GT25 GT23 GT21 07W GT21 05Q GT21 04R GT21 03P 04P ET/R4 GT21 03P 04P R4 GS25 GS21	-	-	-	-	-
FR-E8□0-E	FR Configurator2 *1	-	-	-	GT27 GT25 GS25	-	-	-

*1 Use FR Configurator2 Version 1.19V or later.

■Sensorless servo

Model name	Target software	Connection type						
		Bus connection	Direct CPU connection (serial)	Serial communication connection	Ethernet connection	CC-Link IE TSN connection	CC-Link IE controller network connection	CC-Link IE field network connection
FR-E7□0EX	-	-	-	-	-	-	-	-

■MELIPM

Model name	Target software	Connection type						
		Bus connection	Direct CPU connection (serial)	Serial communication connection	Ethernet connection	CC-Link IE TSN connection	CC-Link IE controller network connection	CC-Link IE field network connection
MD-CX522-□K(-A0)	-	-	-	-	-	-	-	-

■MELSERVO

Model name	Target software	Connection type						
		Bus connection	Direct CPU connection (serial)	Serial communication connection	Ethernet connection	CC-Link IE TSN connection	CC-Link IE controller network connection	CC-Link IE field network connection
MR-J2S-□A MR-J2S-□CP MR-J2S-□CL	-	-	-	-	-	-	-	-
MR-J2M-P8A MR-J2M-□DU	-	-	-	-	-	-	-	-
MR-J3-□A MR-J3-□T	-	-	-	-	-	-	-	-
MR-J3-□B *1*2	MR Configurator2	GT27 GT25 *3	GT27 GT25 GT23 GS25	-	-	-	-	-
MR-J4-□A MR-J4-□A-RJ MR-JE-□A	-	-	-	-	-	-	-	-
MR-J4-□B *1*2 MR-J4-□B-RJ *1*2 MR-J4W2-□B *1*2 MR-J4W3-□B *1*2	MR Configurator2	GT27 GT25 *3	GT27 GT25 GT23 GS25	-	-	-	-	-
MR-JE-□B	-	-	-	-	-	-	-	-

*1 A motion controller is required between the GOT and PLC in bus connection.
*2 A motion controller is required between the GOT and PLC in direct CPU connection (serial).
*3 GT25-W, GT2505-V is not supported.

23.4 System Configuration

GX Series, MX Series, for C Controller module

The following shows the software for each series.

Series	Software
GX Series	GX Works3, GX Works2, GX Developer, GX LogViewer, CPU Module Logging Configuration Tool
MX Series	MX Component, MX Sheet
For C Controller module	CW Configurator, setting/monitoring tool for C Controller module

When connecting the GOT and the personal computer by USB or serial

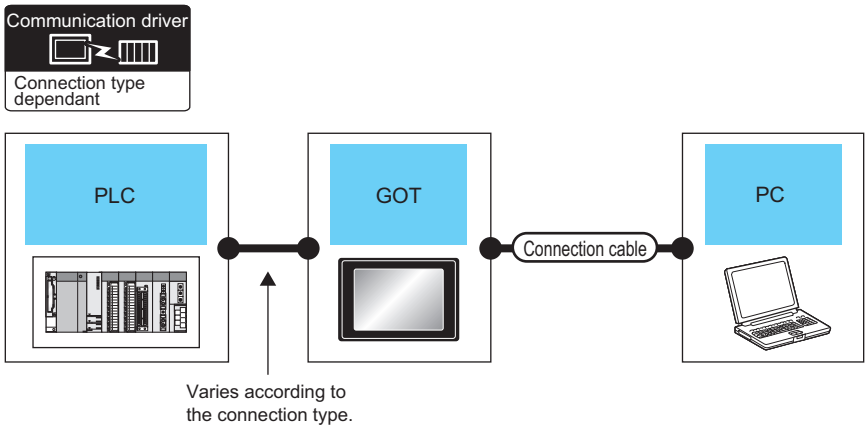

PLC	GOT		Connection cable		Personal computer	Number of connectable equipment
Connection type	Model	Interface	Cable model	Max. distance	Software	
For the system configuration between the GOT and PLC, refer to the following. ☞ Page 217 ETHERNET CONNECTION ☞ Page 375 DIRECT CPU CONNECTION (SERIAL)*11 ☞ Page 439 SERIAL COMMUNICATION CONNECTION	GT27 GT25 GS25	USB	GT09-C30USB-5P(3m) GT09-C20USB-5P(2m)	3m	GX Works3 CW Configurator MX Component MX Sheet CPU Module Logging Configuration Tool	1 personal computer for 1 GOT
For the system configuration between the GOT and PLC, refer to the following. ☞ Page 595 CC-Link IE TSN CONNECTION*9 ☞ Page 625 CC-Link IE CONTROLLER NETWORK CONNECTION ☞ Page 665 CC-Link IE FIELD NETWORK CONNECTION	GT27 GT25 *8	USB	GT09-C30USB-5P(3m) GT09-C20USB-5P(2m)	3m	GX Works3 GX Works2 CW Configurator CPU Module Logging Configuration Tool	1 personal computer for 1 GOT
For the system configuration between the GOT and PLC, refer to the following. ☞ Page 217 ETHERNET CONNECTION ☞ Page 375 DIRECT CPU CONNECTION (SERIAL)*4 ☞ Page 439 SERIAL COMMUNICATION CONNECTION*1*4 ☞ Page 493 BUS CONNECTION*2 ☞ Page 1034 GOT MULTI-DROP CONNECTION*3	GT27 GT25 GS25 *8	USB	GT09-C30USB-5P(3m) GT09-C20USB-5P(2m)	3m	GX Works2 GX Developer GX LogViewer MX Component MX Sheet CPU Module Logging Configuration Tool Setting/Monitoring toolfor C Controllermodule	1 personal computer for 1 GOT

PLC	GOT		Connection cable		Personal computer	Number of connectable equipment
Connection type	**Model**	**Interface**	**Cable model**	**Max. distance**	**Software**	
For the system configuration between the GOT and PLC, refer to the following. ☞ Page 217 ETHERNET CONNECTION*10 ☞ Page 375 DIRECT CPU CONNECTION (SERIAL)*11 ☞ Page 439 SERIAL COMMUNICATION CONNECTION *7*10	GT21 07W, GS21	USB	GT09-C30USB-5P(3m) GT09-C20USB-5P(2m)	3m	GX Works3 CW Configurator MX Component MX Sheet CPU Module Logging Configuration Tool	1 personal computer for 1 GOT
		RS-232	GT01-C30R2-9S(3m)			
For the system configuration between the GOT and PLC, refer to the following. ☞ Page 375 DIRECT CPU CONNECTION (SERIAL)*11 ☞ Page 439 SERIAL COMMUNICATION CONNECTION*7*10	GT21 05Q	USB	GT09-C30USB-5P(3m) GT09-C20USB-5P(2m)			
		RS-232	GT01-C30R2-9S(3m)			
For the system configuration between the GOT and PLC, refer to the following. ☞ Page 217 ETHERNET CONNECTION*10 ☞ Page 375 DIRECT CPU CONNECTION (SERIAL)*11 ☞ Page 439 SERIAL COMMUNICATION CONNECTION*7*10	GT21 04R	USB	GT09-C30USB-5P(3m) GT09-C20USB-5P(2m)			
		RS-232	User preparing Page 1214 RS-232 connection diagram 1)			
For the system configuration between the GOT and PLC, refer to the following. ☞ Page 217 ETHERNET CONNECTION*10 ☞ Page 375 DIRECT CPU CONNECTION (SERIAL)*11 ☞ Page 439 SERIAL COMMUNICATION CONNECTION*7*10	GT21 03P 04P ET/R4	USB	GT09-C30USB-5P(3m) GT09-C20USB-5P(2m)			
For the system configuration between the GOT and PLC, refer to the following. ☞ Page 375 DIRECT CPU CONNECTION (SERIAL)*11 ☞ Page 439 SERIAL COMMUNICATION CONNECTION*7*10	GT21 03P 04P R4, GT21 03P 04P R2, GT21 03P 04P R4-5V	USB	GT09-C30USB-5P(3m) GT09-C20USB-5P(2m)			
		RS-232	GT01-C30R2-6P(3m)			

23

PLC	GOT		Connection cable		Personal computer	Number of connectable equipment
Connection type	**Model**	**Interface**	**Cable model**	**Max. distance**	**Software**	
For the system configuration between the GOT and PLC, refer to the following. ☞ Page 217 ETHERNET CONNECTION ☞ Page 375 DIRECT CPU CONNECTION (SERIAL)*4 ☞ Page 439 SERIAL COMMUNICATION CONNECTION *1*4 ☞ Page 1034 GOT MULTI-DROP CONNECTION *3	GT21 07W, GS21	USB	GT09-C30USB-5P(3m) GT09-C20USB-5P(2m)	3m	GX Works2 GX Developer GX LogViewer MX Component MX Sheet CPU Module Logging Configuration Tool Setting/Monitoring toolfor C Controllermodule	1 personal computer for 1 GOT
		RS-232	GT01-C30R2-9S(3m)			
For the system configuration between the GOT and PLC, refer to the following. ☞ Page 375 DIRECT CPU CONNECTION (SERIAL)*4 ☞ Page 439 SERIAL COMMUNICATION CONNECTION*1*4 ☞ Page 1034 GOT MULTI-DROP CONNECTION*3	GT21 05Q	USB	GT09-C30USB-5P(3m) GT09-C20USB-5P(2m)			
		RS-232	GT01-C30R2-9S(3m)			
For the system configuration between the GOT and PLC, refer to the following. ☞ Page 217 ETHERNET CONNECTION ☞ Page 375 DIRECT CPU CONNECTION (SERIAL)*4 ☞ Page 439 SERIAL COMMUNICATION CONNECTION*1*4 ☞ Page 1034 GOT MULTI-DROP CONNECTION*3	GT21 04R	USB	GT09-C30USB-5P(3m) GT09-C20USB-5P(2m)			
		RS-232	User preparing Page 1214 RS-232 connection diagram 1)			
For the system configuration between the GOT and PLC, refer to the following. ☞ Page 217 ETHERNET CONNECTION ☞ Page 375 DIRECT CPU CONNECTION (SERIAL)*4 ☞ Page 439 SERIAL COMMUNICATION CONNECTION*1*4 ☞ Page 1034 GOT MULTI-DROP CONNECTION*3	GT21 03P 04P ET/R4	USB	GT09-C30USB-5P(3m) GT09-C20USB-5P(2m)			
For the system configuration between the GOT and PLC, refer to the following. ☞ Page 375 DIRECT CPU CONNECTION (SERIAL)*4*6 ☞ Page 439 SERIAL COMMUNICATION CONNECTION*1*4 ☞ Page 1034 GOT MULTI-DROP CONNECTION*3*5	GT21 03P 04P R4, GT21 03P 04P R2, GT21 03P 04P R4-5V	USB	GT09-C30USB-5P(3m) GT09-C20USB-5P(2m)	3m	GX Works2 GX Developer GX LogViewer MX Component MX Sheet CPU Module Logging Configuration Tool Setting/Monitoring toolfor C Controllermodule	1 personal computer for 1 GOT
		RS-232	GT01-C30R2-6P(3m)			

*1 Applicable to the QCPU only
*2 CPU Module Logging Configuration Tool is not applicable to the bus connection
*3 GX LogViewer, MX Component, MX Sheet, QnUDVCPU•LCPU Logging Configuration Tool and Setting/Monitoring tool for C Controller module are not supported.
*4 Not applicable to Setting/Monitoring tool for C Controller module.
*5 GT2104-PMBDS2, GT2103-PMBDS2, GT2104-PMBLS, GT2103-PMBLS do not support the GOT multi-drop connection.
*6 GT2104-PMBLS, GT2103-PMBLS use the USB only as the interface between the GOT and a personal computer.
*7 CW Configurator uses the USB only as the interface between the GOT and a personal computer.
*8 GT25-W, GT2505-V, and GS25 do not support the following connection types:
- Bus connection
- CC-Link IE TSN connection
- CC-Link IE Controller Network connection
- CC-Link IE Field Network connection

*9 GX Works2 and CW Configurator do not support the CC-Link IE TSN connection.
*10 CPU Module Logging Configuration Tool supports only USB interface between the GOT and a personal computer.
*11 CPU Module Logging Configuration Tool does not support the direct CPU connection (serial).

When connecting the GOT and the personal computer by Ethernet

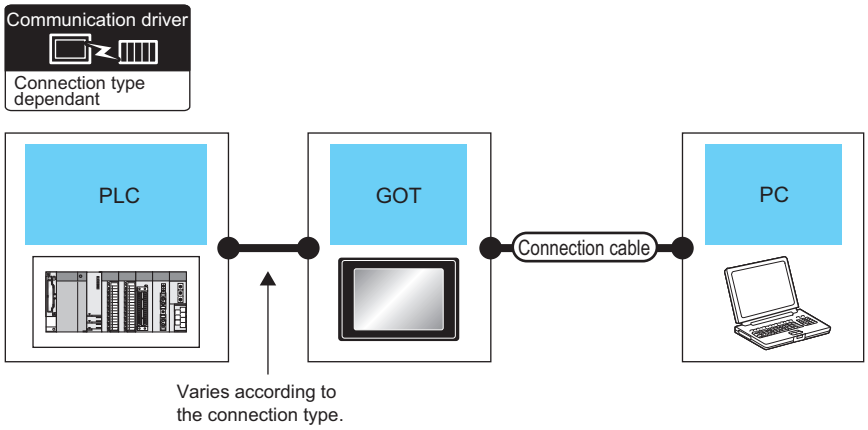

PLC	GOT		Connection cable*1	Maximum segment length*2	Personal computer	Number of connectable equipment
Connection type	Model	Interface	Cable model		Software	
For the system configuration between the GOT and PLC, refer to the following. ☞ Page 217 ETHERNET CONNECTION	GT27 GT25 GS25 *5	- (Built into GOT) or GT25-J71E71-100	Twisted pair cable • 10BASE-T Shielded twisted pair cable (STP) or unshielded twisted pair cable (UTP): Category 3, 4, and 5 • 100BASE-TX Shielded twisted pair cable (STP): Category 5 and 5e	100m	GX Works3 GX Works2 MX Component MX Sheet CPU Module Logging Configuration Tool	1 personal computer for 1 GOT
For the system configuration between the GOT and PLC, refer to the following. ☞ Page 439 SERIAL COMMUNICATION CONNECTION	GT27 GT25 GT23 GT21 07W GT21 04R GT21 03P 04P ETR4 GS25 GS21 *5	- (Built into GOT) or GT25-J71E71-100	Twisted pair cable • 10BASE-T Shielded twisted pair cable (STP) or unshielded twisted pair cable (UTP): Category 3, 4, and 5 • 100BASE-TX Shielded twisted pair cable (STP): Category 5 and 5e	100m	GX Works3 MX Component MX Sheet CW Configurator CPU Module Logging Configuration Tool	1 personal computer for 1 GOT
For the system configuration between the GOT and PLC, refer to the following. ☞ Page 595 CC-Link IE TSN CONNECTION*7 ☞ Page 625 CC-Link IE CONTROLLER NETWORK CONNECTION ☞ Page 665 CC-Link IE FIELD NETWORK CONNECTION	GT27 GT25 *5*6	- (Built into GOT) or GT25-J71E71-100	Twisted pair cable • 10BASE-T Shielded twisted pair cable (STP) or unshielded twisted pair cable (UTP): Category 3, 4, and 5 • 100BASE-TX Shielded twisted pair cable (STP): Category 5 and 5e	100m	GX Works3 GX Works2 CW Configurator CPU Module Logging Configuration Tool	1 personal computer for 1 GOT
For the system configuration between the GOT and PLC, refer to the following. ☞ Page 375 DIRECT CPU CONNECTION (SERIAL)*4 ☞ Page 439 SERIAL COMMUNICATION CONNECTION*4	GT27 GT25 GT23 GT21 07W GT21 04R GT21 03P 04P ETR4 GS25 GS21 *5	- (Built into GOT) or GT25-J71E71-100	Twisted pair cable • 10BASE-T Shielded twisted pair cable (STP) or unshielded twisted pair cable (UTP): Category 3, 4, and 5 • 100BASE-TX Shielded twisted pair cable (STP): Category 5 and 5e	100m	GX Works2 Setting/ Monitoring tool for C Controller module	1 personal computer for 1 GOT
For the system configuration between the GOT and PLC, refer to the following. ☞ Page 493 BUS CONNECTION*3	GT27 GT25 *5*6					

23

*1 Only available for MELSEC-Q (A mode), MELSEC-A (AnSCPU), and Motion CPU (A series) small type.
Connect the cable to the Ethernet module, hub, transceiver, wireless LAN adapter (NZ2WL-JPA or NZ2WL-JPS), or other system equipment according to the Ethernet network system used.
Use cables, connectors, and hubs that meet the IEEE802.3 10BASE-T/100BASE-TX standards.

*2 Length between a hub and a node
The maximum length depends on the Ethernet equipment used.
The following shows the number of the connectable nodes when a repeater hub is used.
• 10BASE-T: Up to 4 nodes for a cascade connection (500 m)
• 100BASE-TX: UP to 2 nodes for a cascade connection (205 m)
When switching hubs are used, the cascade connection between the switching hubs has no logical limit for the number of cascades.
For the limit, contact the switching hub manufacturer.

*3 LCPU is not applicable to the bus connection.

*4 Not applicable to Setting/Monitoring tool for C Controller module.

*5 GT25-W, GT2505-V, GT21, GS25, and GS21 do not support GT25-J71E71-100.

*6 GT25-W and GT2505-V do not support the following connection types:
• Bus connection
• CC-Link IE TSN connection
• CC-Link IE Controller Network connection
• CC-Link IE Field Network connection

*7 GX Works2 and CW Configurator do not support the CC-Link IE TSN connection.

When connecting the GOT and the personal computer by wireless LAN

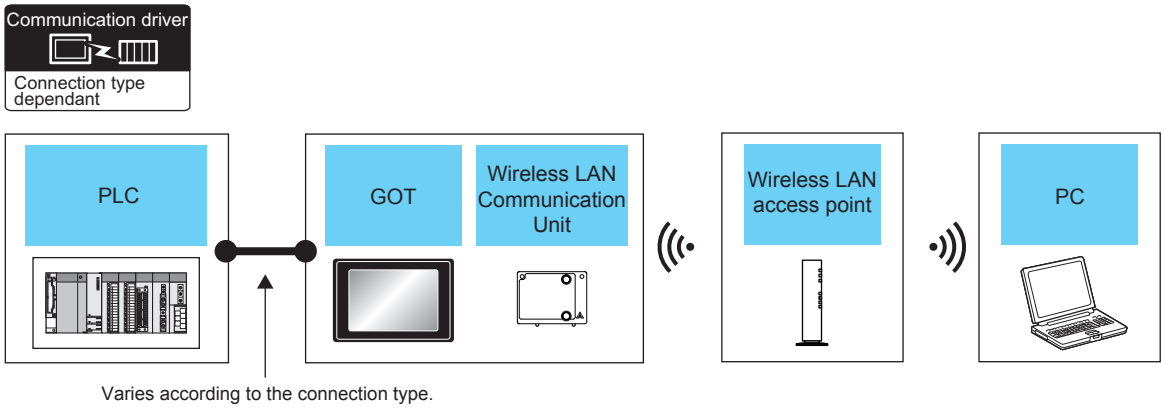

PLC	GOT		Wireless LAN access point	Personal computer	Number of connectable equipment
Connection type	**Model**	**Option device** *6	**Model name**	**Software**	
For the system configuration between the GOT and PLC, refer to the following. ☞ Page 217 ETHERNET CONNECTION	GT27 GT25 GS25 *3	GT25-WLAN	For the wireless LAN access point, use the access point compatible with IEEE802.11b/g/n. *4	GX Works3 GX Works2 MX Component MX Sheet CPU Module Logging Configuration Tool	1 personal computer for 1 GOT
For the system configuration between the GOT and PLC, refer to the following. ☞ Page 439 SERIAL COMMUNICATION CONNECTION	GT27 GT25 GS25 *3	GT25-WLAN	For the wireless LAN access point, use the access point compatible with IEEE802.11b/g/n. *4	GX Works3 MX Component MX Sheet CPU Module Logging Configuration Tool	1 personal computer for 1 GOT
For the system configuration between the GOT and PLC, refer to the following. ☞ Page 625 CC-Link IE CONTROLLER NETWORK CONNECTION ☞ Page 665 CC-Link IE FIELD NETWORK CONNECTION	GT27 GT25 *3*5	GT25-WLAN	For the wireless LAN access point, use the access point compatible with IEEE802.11b/g/n. *4	GX Works3 GX Works2 CPU Module Logging Configuration Tool	1 personal computer for 1 GOT
For the system configuration between the GOT and PLC, refer to the following. ☞ Page 493 BUS CONNECTION*1 ☞ Page 375 DIRECT CPU CONNECTION (SERIAL)*2 ☞ Page 439 SERIAL COMMUNICATION CONNECTION*2	GT27 GT25 GS25 *3*5	GT25-WLAN	For the wireless LAN access point, use the access point compatible with IEEE802.11b/g/n. *4	GX Works2 Setting/Monitoring tool for C Controller module	1 personal computer for 1 GOT

*1 LCPU is not applicable to the bus connection.
*2 Not applicable to Setting/Monitoring tool for C Controller module.
*3 Set the wireless LAN. For details, refer to the following manual.
📖GT Designer3 (GOT2000) Screen Design Manual
*4 When the [Access point] is set to the [Operation mode] using the wireless LAN function for the GOT, the wireless LAN access point is not required.
*5 GT25-W, GT2505-V, and GS25 do not support the bus connection, the CC-Link IE Controller Network connection, and the CC-Link IE Field Network connection.
*6 Check the compliance with the standards applicable to GT25-WLAN before use.
For the standards applicable to GT25-WLAN, refer to the following.
☞ Page 59 Communication module

PX Developer, GX Configurator

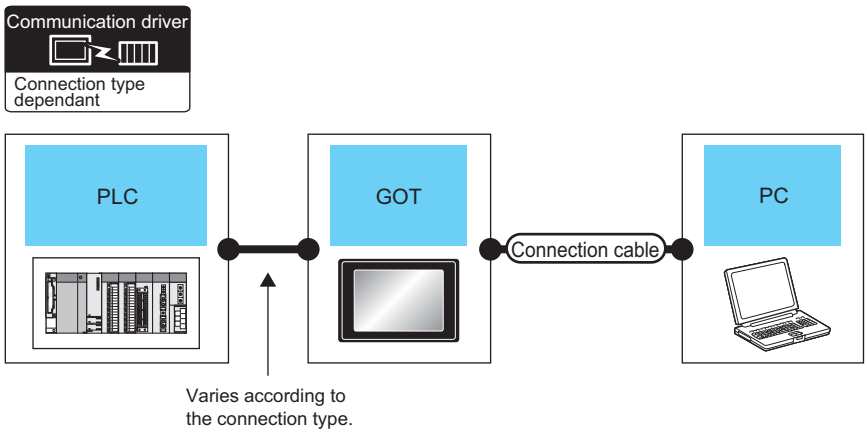

PLC	GOT		Connection cable		Personal computer	Number of connectable equipment
Connection type	**Model**	**Interface**	**Cable model**	**Max. distance**	**Software**	
For the system configuration between the GOT and PLC, refer to the following. ☞ Page 375 DIRECT CPU CONNECTION (SERIAL) ☞ Page 439 SERIAL COMMUNICATION CONNECTION	GT27 GT25 GT23 GS25 *1	USB	GT09-C30USB-5P(3m) GT09-C20USB-5P(2m)	3m	PX Developer GX Configurator	1 personal computer for 1 GOT
For the system configuration between the GOT and PLC, refer to the following. ☞ Page 493 BUS CONNECTION	GT27 GT25 *1	USB	GT09-C30USB-5P(3m) GT09-C20USB-5P(2m)	3m	PX Developer GX Configurator	1 personal computer for 1 GOT

*1 GT25-W, GT2505-V, and GS25 do not support the bus connection.

MT Developer, MT Works2

When connecting the GOT and the personal computer by USB or serial

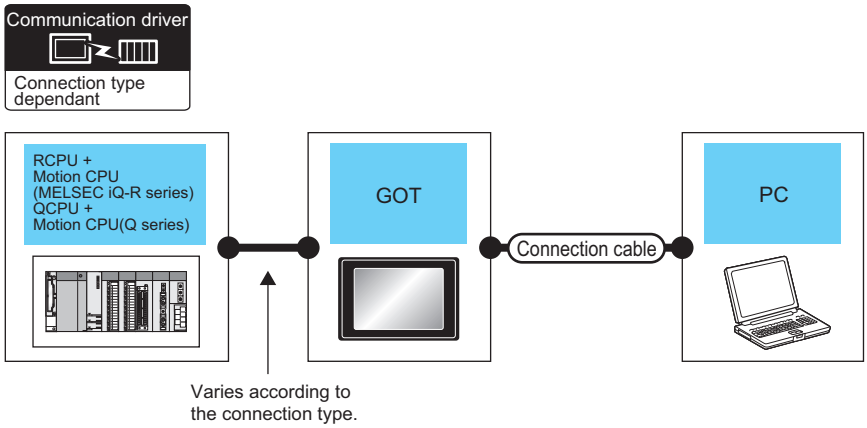

PLC	GOT		Connection cable		Personal computer	Number of connectable equipment
Connection type	Model	Interface	Cable model	Max. distance	Software	
For the system configuration between the GOT and PLC, refer to the following. ☞ Page 493 BUS CONNECTION*1*2 ☞ Page 375 DIRECT CPU CONNECTION (SERIAL)*1 ☞ Page 217 ETHERNET CONNECTION ☞ Page 1034 GOT MULTI-DROP CONNECTION*1	GT27 GT25 GT23 GS25 *5	USB	GT09-C30USB-5P(3m) GT09-C20USB-5P(2m)	3m	MT Developer MT Works2	1 personal computer for 1 GOT
For the system configuration between the GOT and PLC, refer to the following. ☞ Page 217 ETHERNET CONNECTION ☞ Page 1034 GOT MULTI-DROP CONNECTION*1	GT21 03P 04P ET/R4	USB	GT09-C30USB-5P(3m) GT09-C20USB-5P(2m)	3m	MT Developer MT Works2	1 personal computer for 1 GOT
For the system configuration between the GOT and PLC, refer to the following. ☞ Page 375 DIRECT CPU CONNECTION (SERIAL)*1 ☞ Page 217 ETHERNET CONNECTION ☞ Page 1034 GOT MULTI-DROP CONNECTION *1	GT21 07W GS21	USB	GT09-C30USB-5P(3m) GT09-C20USB-5P(2m)	3m	MT Developer MT Works2	1 personal computer for 1 GOT
		RS-232	GT01-C30R2-9S(3m)	3m		
For the system configuration between the GOT and PLC, refer to the following. ☞ Page 375 DIRECT CPU CONNECTION (SERIAL)*1 ☞ Page 1034 GOT MULTI-DROP CONNECTION*1	GT21 05Q	USB	GT09-C30USB-5P(3m) GT09-C20USB-5P(2m)	3m	MT Developer MT Works2	1 personal computer for 1 GOT
		RS-232	GT01-C30R2-9S(3m)	3m		
For the system configuration between the GOT and PLC, refer to the following. ☞ Page 375 DIRECT CPU CONNECTION (SERIAL)*1*4 ☞ Page 1034 GOT MULTI-DROP CONNECTION*1*3	GT21 03P 04P R4 GT21 03P 04P R2 GT21 03P 04P R4-5V	USB	GT09-C30USB-5P(3m) GT09-C20USB-5P(2m)	3m	MT Developer MT Works2	1 personal computer for 1 GOT
		RS-232	GT01-C30R2-6P(3m)	3m		
For the system configuration between the GOT and PLC, refer to the following. ☞ Page 375 DIRECT CPU CONNECTION (SERIAL)*1 ☞ Page 217 ETHERNET CONNECTION ☞ Page 1034 GOT MULTI-DROP CONNECTION*1	GT21 04R	USB	GT09-C30USB-5P(3m) GT09-C20USB-5P(2m)	3m	MT Developer MT Works2	1 personal computer for 1 GOT
		RS-232	User preparing Page 1214 RS-232 connection diagram 1)	3m		

*1 The Motion CPU (MELSEC iQ-R series) does not support the bus connection, direct CPU connection (serial), and GOT multi-drop connection.
*2 GT23 is not applicable to the bus connection.
*3 GT2104-PMBDS2, GT2103-PMBDS2, GT2104-PMBLS, GT2103-PMBLS do not support the GOT multi-drop connection.
*4 GT2104-PMBLS, GT2103-PMBLS use the USB only as the interface between the GOT and a personal computer.
*5 GT25-W, GT2505-V, and GS25 do not support the bus connection.

When connecting the GOT and the personal computer by Ethernet

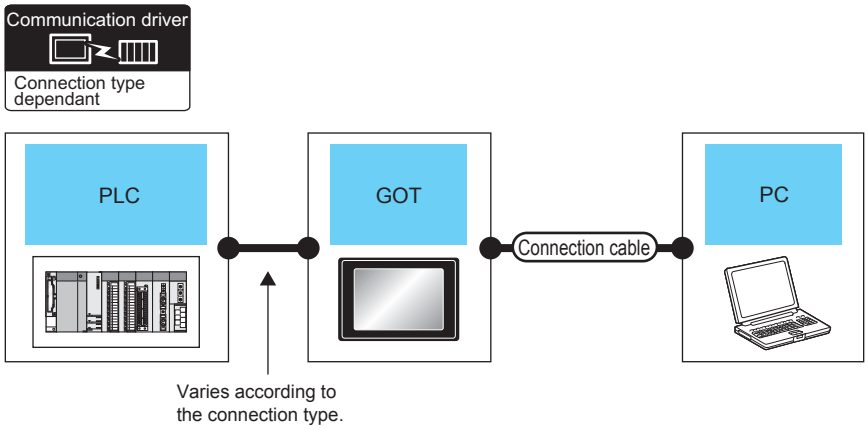

PLC	GOT		Connection cable*1	Maximum segment length*2	Personal computer	Number of connectable equipment
Connection type	Model	Interface	Cable model		Software	
For the system configuration between the GOT and PLC, refer to the following. ☞ Page 375 DIRECT CPU CONNECTION (SERIAL)	GT27 GT25 GT23 GT21 GS25 GS21	- (Built into GOT)	Twisted pair cable • 10BASE-T Shielded twisted pair cable (STP) or unshielded twisted pair cable (UTP): Category 3, 4, and 5 • 100BASE-TX Shielded twisted pair cable (STP): Category 5 and 5e	100m	MT Works2	1 personal computer for 1 GOT
For the system configuration between the GOT and PLC, refer to the following. ☞ Page 217 ETHERNET CONNECTION ☞ Page 493 BUS CONNECTION*3	GT27 GT25 GS25 *4	- (Built into GOT)	Twisted pair cable • 10BASE-T Shielded twisted pair cable (STP) or unshielded twisted pair cable (UTP): Category 3, 4, and 5 • 100BASE-TX Shielded twisted pair cable (STP): Category 5 and 5e	100m	MT Works2	1 personal computer for 1 GOT

*1 Only available for MELSEC-Q (A mode), MELSEC-A (AnSCPU), and Motion CPU (A series) small type.
Connect the cable to the Ethernet module, hub, transceiver, wireless LAN adapter (NZ2WL-JPA or NZ2WL-JPS), or other system equipment according to the Ethernet network system used.
Use cables, connectors, and hubs that meet the IEEE802.3 10BASE-T/100BASE-TX standards.

*2 Length between a hub and a node
The maximum length depends on the Ethernet equipment used.
The following shows the number of the connectable nodes when a repeater hub is used.
• 10BASE-T: Up to 4 nodes for a cascade connection (500 m)
• 100BASE-TX: UP to 2 nodes for a cascade connection (205 m)
When switching hubs are used, the cascade connection between the switching hubs has no logical limit for the number of cascades.
For the limit, contact the switching hub manufacturer.

*3 LCPU is not applicable to the bus connection.

*4 GT25-W, GT2505-V, and GS25 do not support the bus connection.

When connecting the GOT and the personal computer by wireless LAN

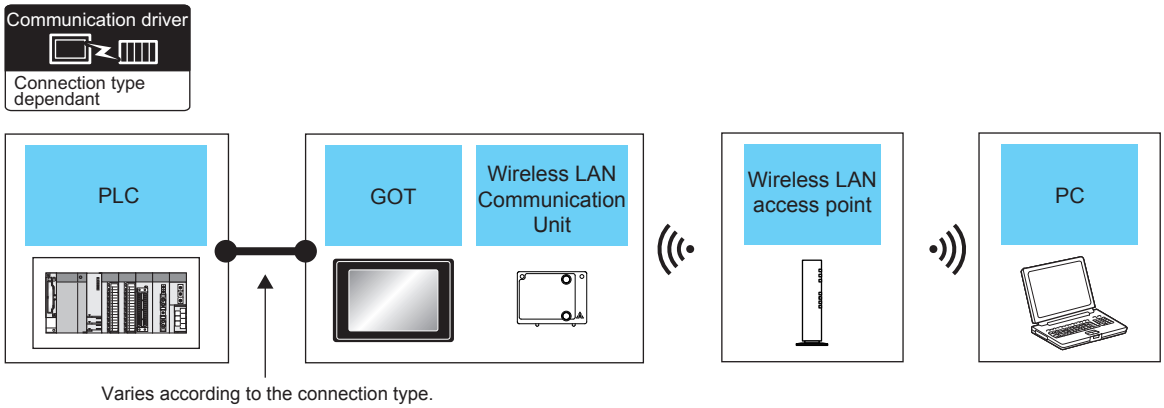

PLC	GOT		Wireless LAN access point	Personal computer	Number of connectable equipment
Connection type	**Model**	**Option device**	**Model name**	**Software**	
For the system configuration between the GOT and PLC, refer to the following. ☞ Page 217 ETHERNET CONNECTION ☞ Page 493 BUS CONNECTION*1 ☞ Page 375 DIRECT CPU CONNECTION (SERIAL)	GT27 GT25 GS25 *2*4	GT25-WLAN	For the wireless LAN access point, use the access point compatible with IEEE802.11b/g/n. *3	MT Works2	1 personal computer for 1 GOT

*1 LCPU is not applicable to the bus connection.

*2 Set the wireless LAN. For details, refer to the following manual.
📖GT Designer3 (GOT2000) Screen Design Manual

*3 When the [Access point] is set to the [Operation mode] using the wireless LAN function for the GOT, the wireless LAN access point is not required.

*4 GT25-W, GT2505-V, and GS25 do not support the bus connection.

MR Configurator, MR Configurator2

When connecting the GOT and the personal computer by USB

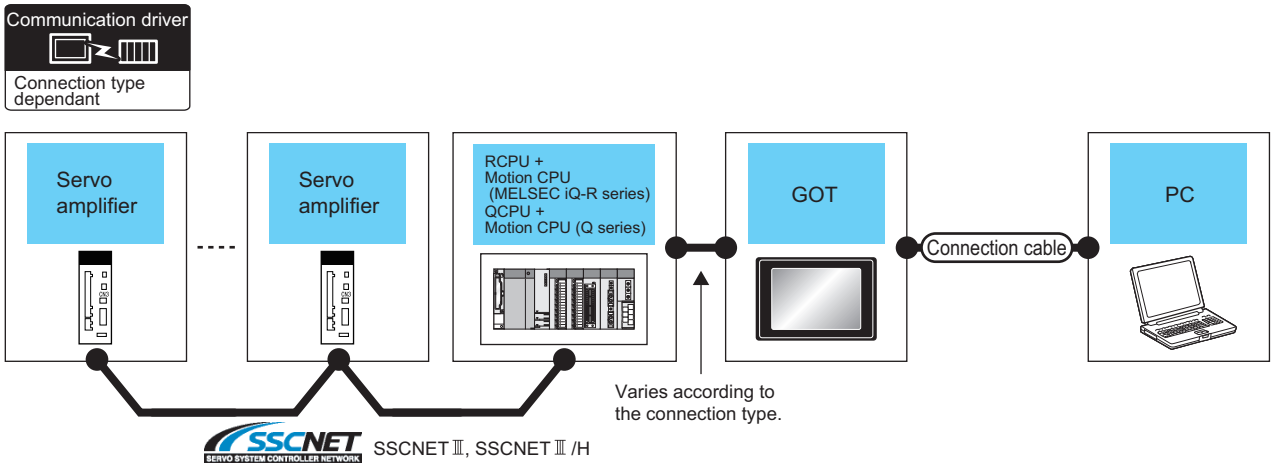

PLC	GOT		Connection cable		Personal computer	Number of connectable equipment
Connection type	**Model**	**Interface**	**Cable model**	**Max. distance**	**Software**	
For the system configuration between the GOT and PLC, refer to the following. ☞ Page 375 DIRECT CPU CONNECTION (SERIAL)*2 ☞ Page 217 ETHERNET CONNECTION*1	GT27 GT25 GT23 GS25 *3	USB	GT09-C30USB-5P(3m) GT09-C20USB-5P(2m)	3m	MR Configurator MR Configurator2	1 personal computer for 1 GOT
For the system configuration between the GOT and PLC, refer to the following. ☞ Page 493 BUS CONNECTION*2	GT27 GT25 *3	USB	GT09-C30USB-5P(3m) GT09-C20USB-5P(2m)	3m	MR Configurator MR Configurator2	1 personal computer for 1 GOT

*1 Only MR Configurator2 is compatible with the Ethernet connection.
*2 The Motion CPU (MELSEC iQ-R series) does not support the bus connection and direct CPU connection (serial).
*3 GT25-W, GT2505-V, and GS25 do not support the bus connection.

When connecting the GOT and the personal computer by Ethernet

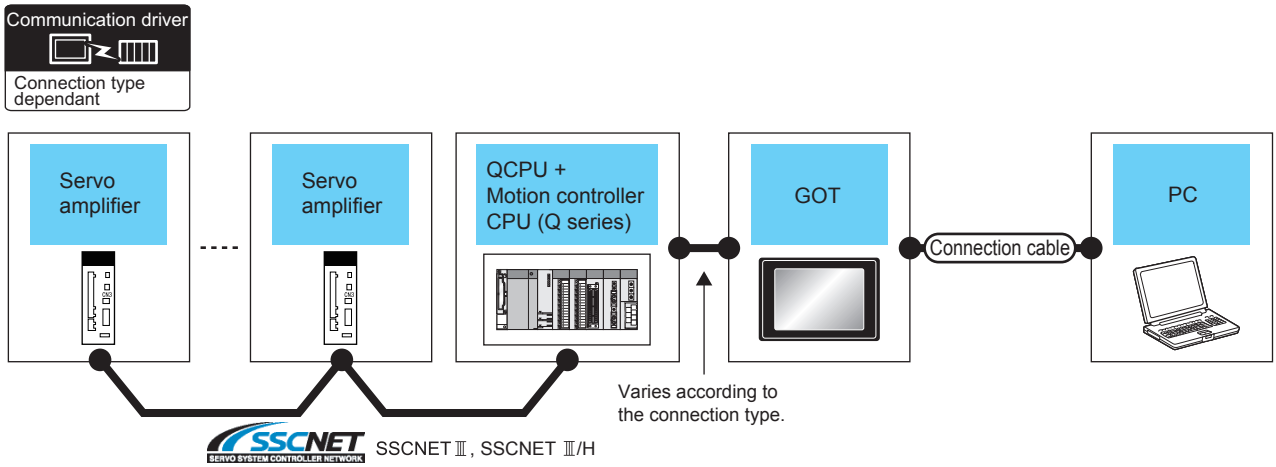

PLC	GOT		Connection cable*1	Maximum segment length*2	Personal computer	Number of connectable equipment
Connection type	Model	Interface	Cable model		Software	
For the system configuration between the GOT and PLC, refer to the following. ☞ Page 375 DIRECT CPU CONNECTION (SERIAL)	GT27 GT25 GT23 GS25 *4	- (Built into GOT)	Twisted pair cable • 10BASE-T Shielded twisted pair cable (STP) or unshielded twisted pair cable (UTP): Category 3, 4, and 5 • 100BASE-TX Shielded twisted pair cable (STP): Category 5 and 5e	100m	MR Configurator2	1 personal computer for 1 GOT
For the system configuration between the GOT and PLC, refer to the following. ☞ Page 493 BUS CONNECTION*3	GT27 GT25 *4	- (Built into GOT)	Twisted pair cable • 10BASE-T Shielded twisted pair cable (STP) or unshielded twisted pair cable (UTP): Category 3, 4, and 5 • 100BASE-TX Shielded twisted pair cable (STP): Category 5 and 5e	100m	MR Configurator2	1 personal computer for 1 GOT

*1 Only available for MELSEC-Q (A mode), MELSEC-A (AnSCPU), and Motion CPU (A series) small type.
Connect the cable to the Ethernet module, hub, transceiver, wireless LAN adapter (NZ2WL-JPA or NZ2WL-JPS), or other system equipment according to the Ethernet network system used.
Use cables, connectors, and hubs that meet the IEEE802.3 10BASE-T/100BASE-TX standards.

*2 Length between a hub and a node
The maximum length depends on the Ethernet equipment used.
The following shows the number of the connectable nodes when a repeater hub is used.
• 10BASE-T: Up to 4 nodes for a cascade connection (500 m)
• 100BASE-TX: UP to 2 nodes for a cascade connection (205 m)
When switching hubs are used, the cascade connection between the switching hubs has no logical limit for the number of cascades.
For the limit, contact the switching hub manufacturer.

*3 LCPU is not applicable to the bus connection.

*4 GT25-W, GT2505-V, and GS25 do not support the bus connection.

When connecting the GOT and the personal computer by wireless LAN

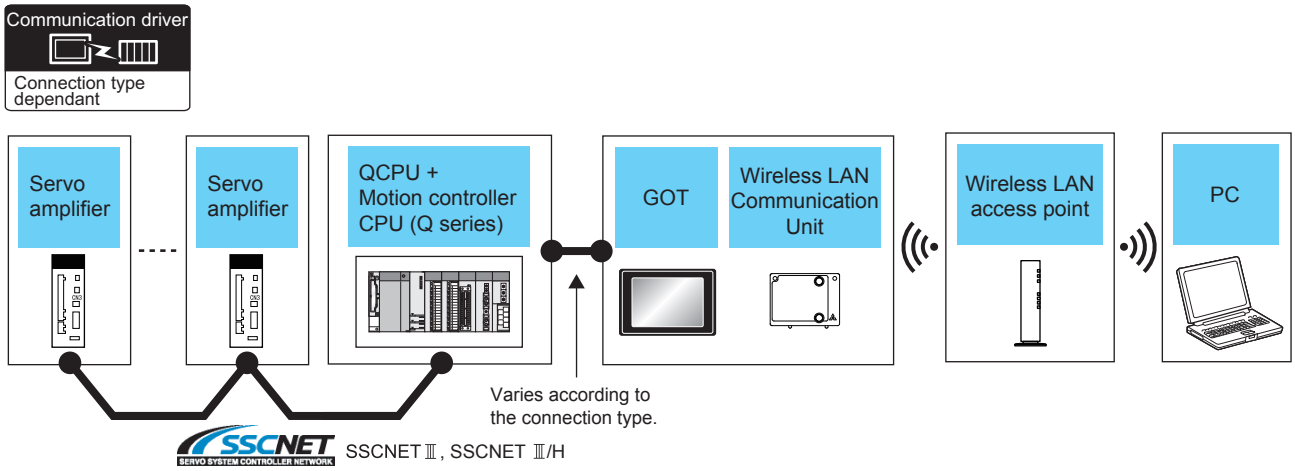

PLC	GOT		Wireless LAN access point	Personal computer	Number of connectable equipment
Connection type	**Model**	**Option device**	**Model name**	**Software**	
For the system configuration between the GOT and PLC, refer to the following. ☞ Page 493 BUS CONNECTION*1 ☞ Page 375 DIRECT CPU CONNECTION (SERIAL)	GT27 GT25 GS25 *2*4	GT25-WLAN	For the wireless LAN access point, use the access point compatible with IEEE802.11b/g/n. *3	MR Configurator2	1 personal computer for 1 GOT

*1 LCPU is not applicable to the bus connection.
*2 Set the wireless LAN. For details, refer to the following manual.
📖GT Designer3 (GOT2000) Screen Design Manual
*3 When the [Access point] is set to the [Operation mode] using the wireless LAN function for the GOT, the wireless LAN access point is not required.
*4 GT25-W, GT2505-V, and GS25 do not support the bus connection.

FR Configurator, FR Configurator2

When connecting the GOT and the personal computer by USB

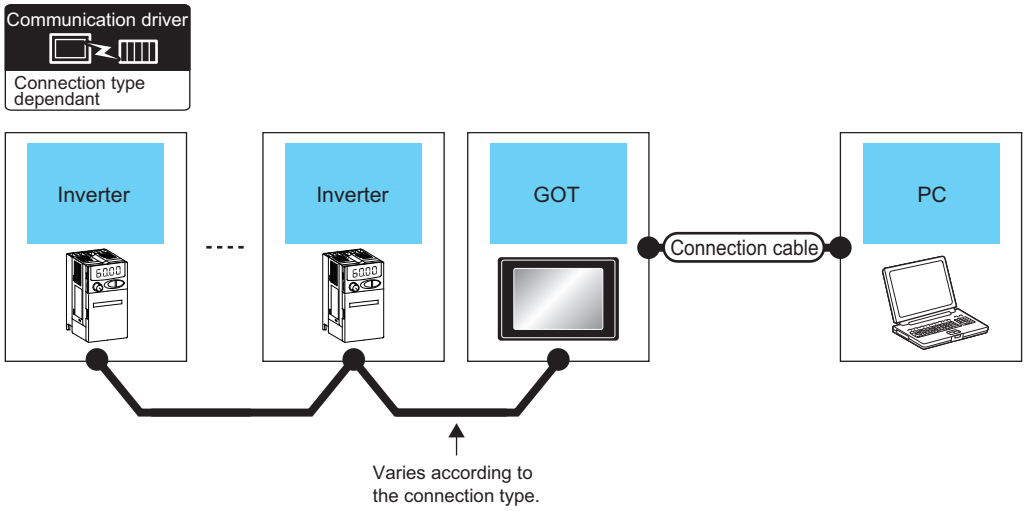

Inverter	GOT		Connection cable		Personal computer	Number of connectable equipment
Connection type	**Model**	**Interface**	**Cable model**	**Max. distance**	**Software**	
For details on the system configuration between GOT and Mitsubishi Electric inverter, refer to the following. ☞ Page 839 INVERTER CONNECTION	GT27 GT25 GT23 GS25	USB	GT09-C30USB-5P(3m) GT09-C20USB-5P(2m)	3m	FR Configurator	1 personal computer for 1 GOT
	GT21 07W GT21 05Q GT21 04R GT21 03P 04P ET/R4 GT21 03P 04P R4	USB	GT09-C30USB-5P(3m) GT09-C20USB-5P(2m)	3m	FR Configurator2	1 personal computer for 1 GOT

When connecting the GOT and the personal computer by Ethernet

Point

When the GOT and the inverters are connected using the direct CPU connection (serial), the communication driver [FREQROL 500/700/800, SENSORLESS SERVO] is not supported.

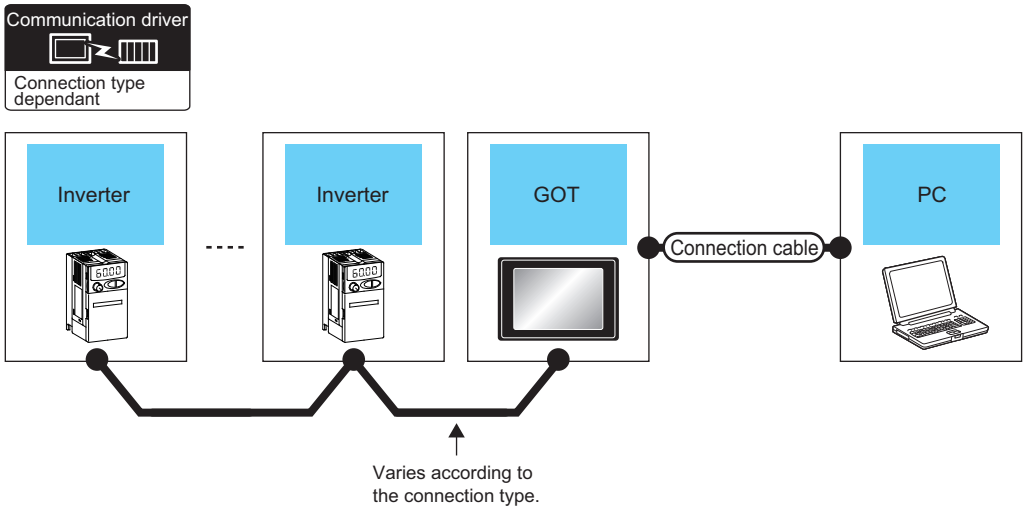

Inverter	GOT		Connection cable *1	Maximum segment length *2	Personal computer	Number of connectable equipment
Connection type	Model	Interface	Cable model		Software	
For details on the system configuration between GOT and Mitsubishi Electric inverter, refer to the following. ☞ Page 839 INVERTER CONNECTION	GT27 GT25 GT23 GS25	- (Built into GOT)	Twisted pair cable • 10BASE-T Shielded twisted pair cable (STP) or unshielded twisted pair cable (UTP): Category 3, 4, and 5 • 100BASE-TX Shielded twisted pair cable (STP): Category 5 and 5e	100m	FR Configurator2	1 personal computer for 1 GOT

*1 Only available for MELSEC-Q (A mode), MELSEC-A (AnSCPU), and Motion CPU (A series) small type.
Connect the cable to the Ethernet module, hub, transceiver, wireless LAN adapter (NZ2WL-JPA or NZ2WL-JPS), or other system equipment according to the Ethernet network system used.
Use cables, connectors, and hubs that meet the IEEE802.3 10BASE-T/100BASE-TX standards.

*2 Length between a hub and a node
The maximum length depends on the Ethernet equipment used.
The following shows the number of the connectable nodes when a repeater hub is used.
• 10BASE-T: Up to 4 nodes for a cascade connection (500 m)
• 100BASE-TX: UP to 2 nodes for a cascade connection (205 m)
When switching hubs are used, the cascade connection between the switching hubs has no logical limit for the number of cascades.
For the limit, contact the switching hub manufacturer.

When connecting the GOT and the personal computer by wireless LAN

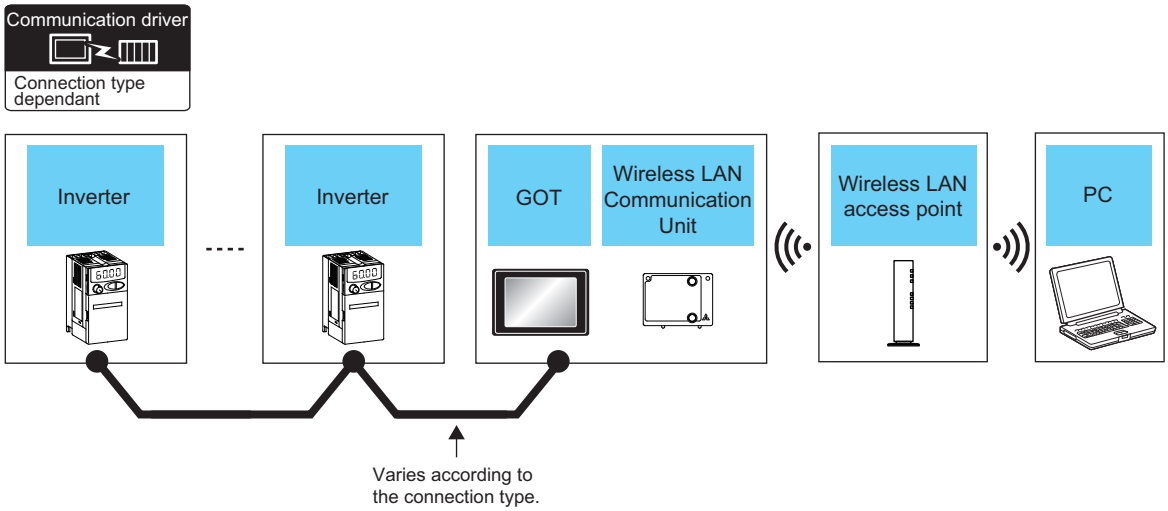

Inverter	GOT		Wireless LAN access point	Personal computer	Number of connectable equipment
Connection type	**Model**	**Interface**	**Model name**	**Software**	
For details on the system configuration between GOT and Mitsubishi Electric inverter, refer to the following. ☞ Page 839 INVERTER CONNECTION	GT27 GT25 GT23 GS25 *1	GT25-WLAN	For the wireless LAN access point, use the access point compatible with IEEE802.11b/g/n. *2	FR Configurator2	1 personal computer for 1 GOT

*1 Set the wireless LAN. For details, refer to the following manual.
📖GT Designer3 (GOT2000) Screen Design Manual

*2 When the [Access point] is set to the [Operation mode] using the wireless LAN function for the GOT, the wireless LAN access point is not required.

FX Configurator-FP, FX Configurator-EN-L, FX Configurator-EN

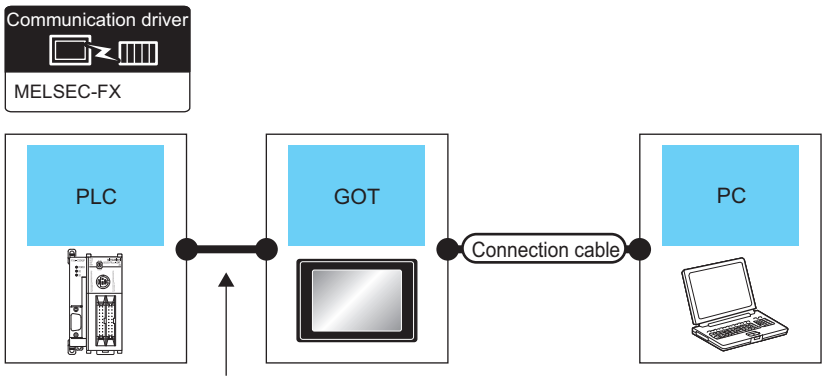

PLC	GOT		Connection cable		Personal computer	Number of connectable equipment
Connection type	**Model**	**Interface**	**Cable model**	**Max. distance**	**Software**	
For the system configuration between the GOT and PLC, refer to the following. ☞ Page 375 DIRECT CPU CONNECTION (SERIAL)	GT27 GT25 GT23 GT21 07W GS25 GS21	USB	GT09-C30USB-5P(3m) GT09-C20USB-5P(2m)	3m	FX Configurator-FP FX Configurator-EN-L FX Configurator-EN	1 personal computer for 1 GOT
For the system configuration between the GOT and PLC, refer to the following. ☞ Page 375 DIRECT CPU CONNECTION (SERIAL)	GT21 05Q	USB	GT09-C30USB-5P(3m) GT09-C20USB-5P(2m)	3m	FX Configurator-FP FX Configurator-EN-L FX Configurator-EN	1 personal computer for 1 GOT
		RS-232	GT01-C30R2-9S(3m)	3m		
For the system configuration between the GOT and PLC, refer to the following. ☞ Page 375 DIRECT CPU CONNECTION (SERIAL)	GT21 03P 04P R4 GT21 03P 04P R2	USB	GT09-C30USB-5P(3m) GT09-C20USB-5P(2m)	3m	FX Configurator-FP FX Configurator-EN-L FX Configurator-EN	1 personal computer for 1 GOT
		RS-232	GT01-C30R2-6P(3m)	3m		
For the system configuration between the GOT and PLC, refer to the following. ☞ Page 375 DIRECT CPU CONNECTION (SERIAL)	GT21 04R	USB	GT09-C30USB-5P(3m) GT09-C20USB-5P(2m)	3m	FX Configurator-FP FX Configurator-EN-L FX Configurator-EN	1 personal computer for 1 GOT
		RS-232	User preparing Page 1214 RS-232 connection diagram 1)	3m		

RT ToolBox2, RT ToolBox3

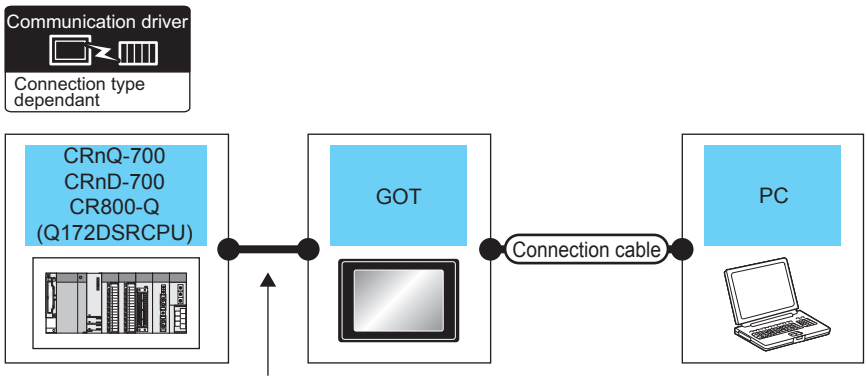

PLC	GOT		Connection cable		Personal computer	Number of connectable equipment
Connection type	**Model**	**Interface**	**Cable model**	**Max. distance**	**Software**	
For the system configuration between the GOT and PLC, refer to the following. ☞ Page 375 DIRECT CPU CONNECTION (SERIAL)*1 ☞ Page 217 ETHERNET CONNECTION	GT27 GT25 GT23 GS25 *2	USB	GT09-C30USB-5P(3m) GT09-C20USB-5P(2m)	3m	RT ToolBox2 RT ToolBox3	1 personal computer for 1 GOT
For the system configuration between the GOT and PLC, refer to the following. ☞ Page 493 BUS CONNECTION*1	GT27 GT25 *2	USB	GT09-C30USB-5P(3m) GT09-C20USB-5P(2m)	3m	RT ToolBox2 RT ToolBox3	1 personal computer for 1 GOT
For the system configuration between the GOT and PLC, refer to the following. ☞ Page 375 DIRECT CPU CONNECTION (SERIAL) ☞ Page 217 ETHERNET CONNECTION	GT21 GS21	USB	GT09-C30USB-5P(3m) GT09-C20USB-5P(2m)	3m	RT ToolBox2 RT ToolBox3	1 personal computer for 1 GOT
		RS-232	GT01-C30R2-9S(3m)	3m		

*1 CRnD-700 is not applicable to the bus connection or the direct CPU connection (serial).
*2 GT25-W, GT2505-V, and GS25 do not support the bus connection.

NC Configurator2

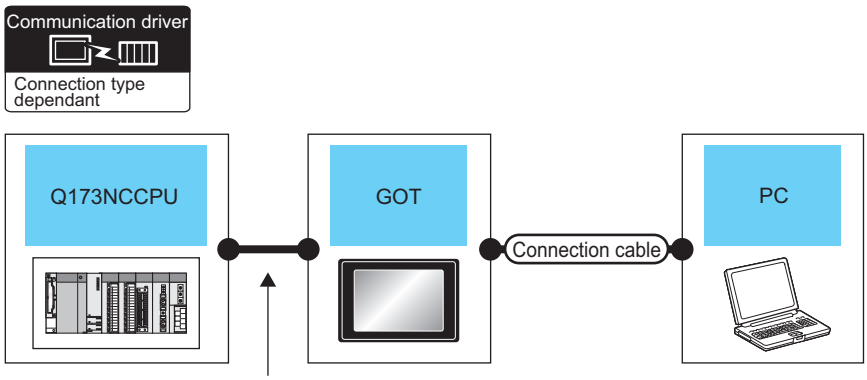

PLC	GOT		Connection cable		Personal computer	Number of connectable equipment
Connection type	**Model**	**Interface**	**Cable model**	**Max. distance**	**Software**	
For the system configuration between the GOT and PLC, refer to the following. ☞ Page 217 ETHERNET CONNECTION	GT27 GT25 GT23 GS25 *1	USB	GT09-C30USB-5P(3m) GT09-C20USB-5P(2m)	3m	NC Configurator2	1 personal computer for 1 GOT
For the system configuration between the GOT and PLC, refer to the following. ☞ Page 493 BUS CONNECTION	GT27 GT25 *1	USB	GT09-C30USB-5P(3m) GT09-C20USB-5P(2m)	3m	NC Configurator2	1 personal computer for 1 GOT

*1 GT25-W, GT2505-V, and GS25 do not support the bus connection.

MI Configurator

Communication driver

Ethernet(MITSUBISHI ELECTRIC),Gateway

When connecting the GOT and the personal computer by USB

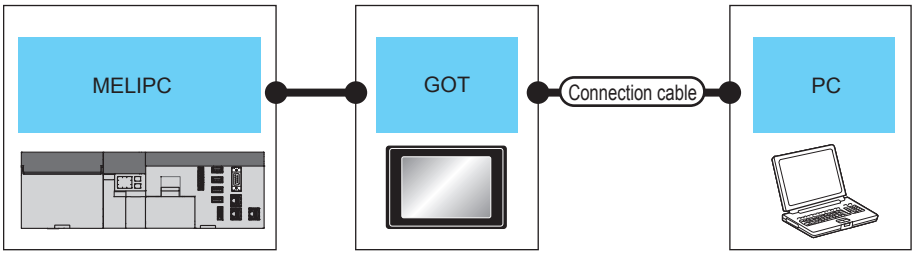

PLC	GOT		Connection cable		Personal computer	Number of connectable equipment
Connection type	Model	Interface	Cable model	Max. distance	Software	
For the system configuration between the GOT and MELIPC, refer to the following. ☞ Page 814 MELIPC CONNECTION*1	GT27 GT25 GT21 GT2 GS25	USB	GT09-C30USB-5P(3m) GT09-C20USB-5P(2m)	3m	MI Configurator	1 personal computer for 1 GOT

*1 Only for Ethernet connection, the GOT supports FA transparent function.

When connecting the GOT and the personal computer by Ethernet

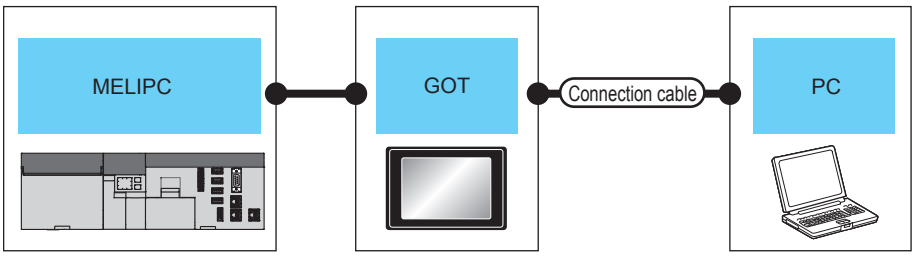

PLC	GOT		Connection cable*1	Maximum segment length*2	Personal computer	Number of connectable equipment
Connection type	Model	Interface	Cable model		Software	
For the system configuration between the GOT and MELIPC, refer to the following. ☞ Page 814 MELIPC CONNECTION*4	GT27 GT25 GS25 *3	- (Built into GOT) or GT25-J71E71-100	Twisted pair cable • 10BASE-T Shielded twisted pair cable (STP) or unshielded twisted pair cable (UTP): Category 3, 4, and 5 • 100BASE-TX Shielded twisted pair cable (STP): Category 5 and 5e	100m	MT Works2	1 personal computer for 1 GOT

*1 The connection destination of the twisted pair cable differs depending on the configuration of the Ethernet network system to be used. Connect to the Ethernet module, hub, transceiver, the wireless LAN adapter (NZ2WL-JPA, NZ2WL-JPS) or other system equipment corresponding to the applicable Ethernet network system.
Use cables, connectors, and hubs that meet the IEEE802.3 10BASE-T/100BASE-TX standard.
For the controller to which the wireless LAN adapter can be connected and the setting method of the wireless LAN adapter, refer to the manual of the wireless LAN adapter.

*2 Length between a hub and a node
The maximum length depends on the Ethernet equipment used.
The following shows the number of the connectable nodes when a repeater hub is used.
• 10BASE-T: Up to 4 nodes for a cascade connection (500 m)
• 100BASE-TX: UP to 2 nodes for a cascade connection (205 m)
When switching hubs are used, the cascade connection between the switching hubs has no logical limit for the number of cascades.
For the limit, contact the switching hub manufacturer.

*3 GT25-W, GT2505-V, and GS25 do not support GT25-J71E71-100.

*4 Only for Ethernet connection, the GOT supports FA transparent function.

When connecting the GOT and the personal computer by wireless LAN

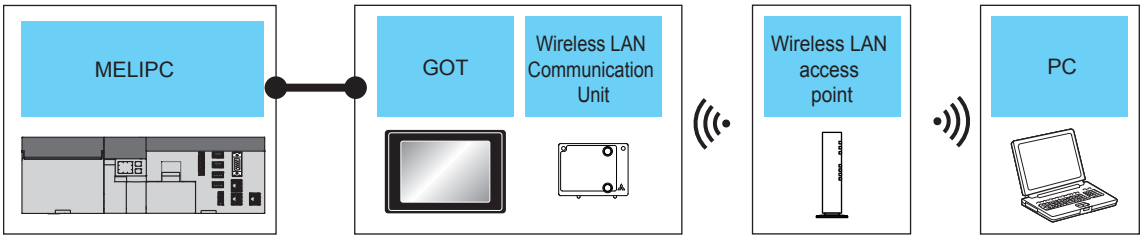

PLC	GOT		Wireless LAN access point	Personal computer	Number of connectable equipment
Connection type	Model	Option device	Model name	Software	
For the system configuration between the GOT and PLC, refer to the following. ☞ Page 814 MELIPC CONNECTION*4	GT27 GT25 GS25 *1*2*3	GT25-WLAN	For the wireless LAN access point, use the access point compatible with IEEE802.11b/g/n. *2	MT Works2	1 personal computer for 1 GOT

*1 Set the wireless LAN. For details, refer to the following manual.
📖GT Designer3 (GOT2000) Screen Design Manual

*2 When the [Access point] is set to the [Operation mode] using the wireless LAN function for the GOT, the wireless LAN access point is not required.

*3 GT2505-V does not support the option device.

*4 Only for Ethernet connection, the GOT supports FA transparent function.

23.5 Connection Diagram

The following diagram shows the connection between the GOT and the PLC.

RS-232 cable

Connection Diagram

■RS-232 connection diagram 1)

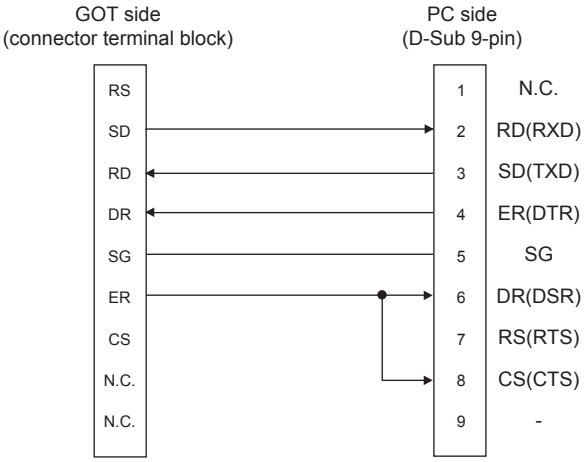

Precautions when preparing a cable

■Cable length

The length of the RS-232 cable must be within the maximum distance specifications.

■GOT side connector

For the GOT side connector, refer to the following.

☞ Page 64 GOT connector specifications

23.6 GOT Side Settings

Setting communication interface

Controller Setting

Set the channel of the connected equipment.

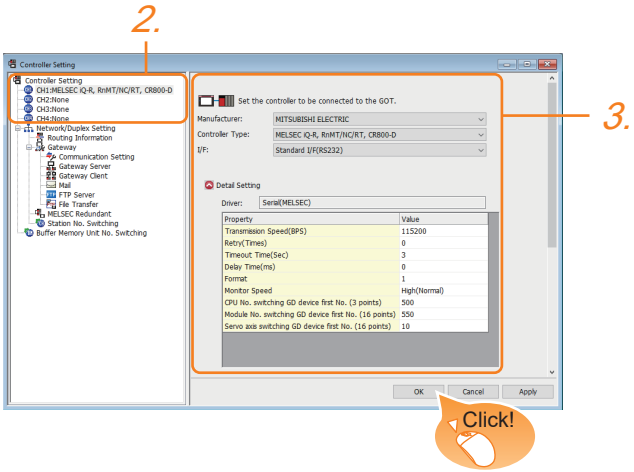

1. Select [Common] → [Controller Setting] from the menu.
2. In the [Controller Setting] window, select the channel No. to be used from the list menu.
3. Set [Manufacturer], [Controller Type], [I/F], and [Detail Setting] according to the controller used.
4. When you have completed the settings, click the [OK] button.

Point

The settings of connecting equipment can be confirmed in [I/F Communication Setting].
For details, refer to the following.
☞ Page 54 I/F communication setting

Communication setting with personal computer

Set the communication setting between the GOT and the personal computer.

For details of the setting contents, refer to the following manual.

📖GT Designer3 (GOT2000) Screen Design Manual

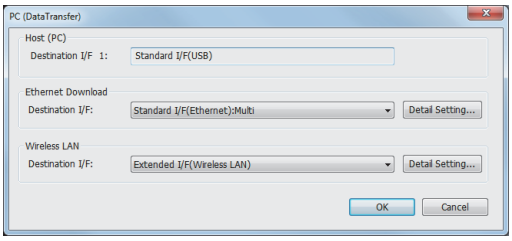

1. Select [Common] → [Peripheral Setting] → [PC(Data Transfer)] from the menu.
2. The [PC (Data Transfer)] is displayed. Set the interface of the GOT to be used in the communication with the personal computer.

■Host (PC) setting

When communicating the GOT and the personal computer in the direct connection, set the interface of the GOT to be used in the communication with the personal computer.

■Ethernet download setting

When communicating the GOT via Ethernet, set the interface of the GOT to be used in the communication with the personal computer.

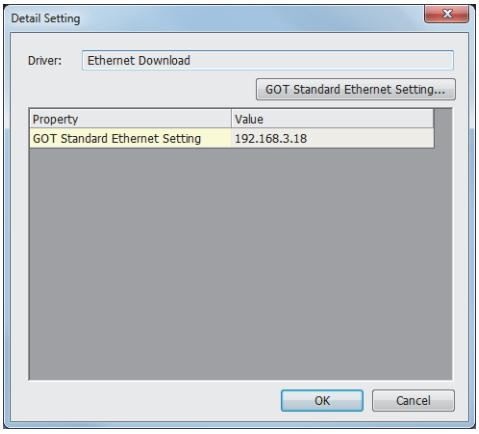

Item	Description	Range
GOT Standard Ethernet Setting *1	Set the IP address of the GOT. (Default: 192.168.3.18)	0.0.0.0 to 255.255.255.255

*1 For setting, refer to the following.
☞ Page 50 GOT Ethernet Setting

■Wireless LAN setting

When communicating the GOT via wireless LAN, set the interface of the GOT to be used in the communication with the personal computer.

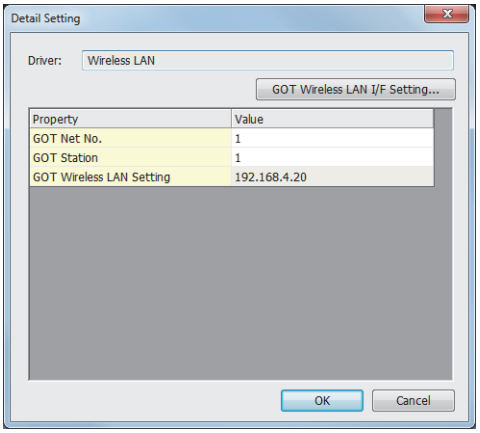

Item	Description	Range
GOT Wireless LAN I/F Setting *1	Set the IP address of the GOT. (Default: 192.168.4.20)	0.0.0.0 to 255.255.255.255

*1 For setting, refer to the following.
☞ Page 50 GOT Ethernet Setting

Point

When connecting the GOT and the personal computer by Ethernet or wireless LAN, match the GOT IP address and the transparent port No. with those in [PLC side I/F Detailed Setting of GOT] of GX Works2.
☞ Page 1282 Accessing by GX Works2

1. Click the [OK] button when settings are completed.

Point

• Communication interface setting by Utility
The communication interface setting can be changed on the Utility's [Communication Settings] after downloading [Communication Settings] of project data.
For details on the Utility, refer to the following manual.
📖GOT2000 Series User's Manual (Utility)
• Precedence in communication settings
When settings are made by GT Designer3 or the Utility, the latest setting is effective.

GOT Setup

When using the multi-channel function, specify the channel No. on which FA transparent function is executed.
(For GT27, GT25, GS25)

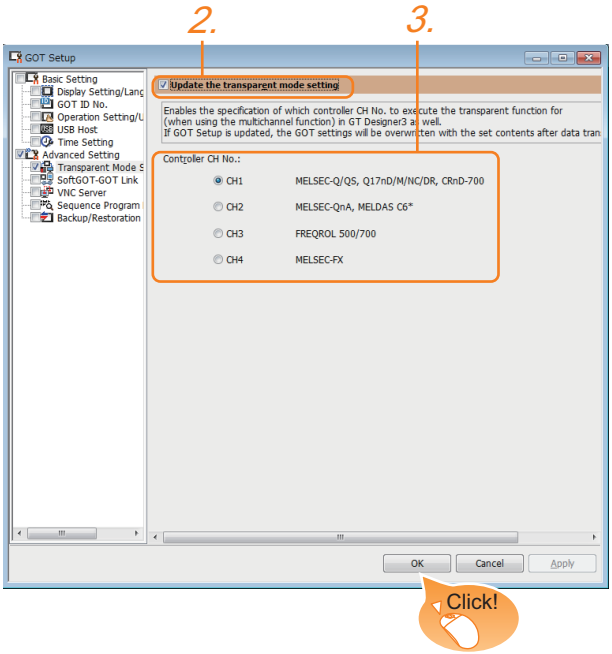

1. Select [Common] → [GOT Environmental Setting] → [GOT Setup] from the menu.

2. Check [Enable GOT Setup].

3. As necessary, check one of [CH1] to [CH4]. (Default: CH1)

GOT	Selectable CH No.
GT 27 GT 25 GS 25	[CH1], [CH2], [CH3], [CH4]
GT 23 GT 21 07W GT 21 03P 04P ETR4 GT 21 03P 04P R4 GS 21	[CH1], [CH2]

4. Click the [OK] button when settings are completed.

Point

Transparent setting on the utility screen
Transparent setting can be performed by the GOT.
For details of the operating, refer to the following.
📖GOT2000 Series User's Manual (Utility)

23.7 Personal Computer Side Setting

Accessing by GX Works3

The following shows the procedure to set the FA transparent function of GX Works3.
GX Works3 Version 1.030G or later is required to use the FA transparent function for the RCPU redundant system.

When connecting the GOT and the personal computer by USB

■Connecting the GOT and PLC in Ethernet connection

- When connecting to RCPU

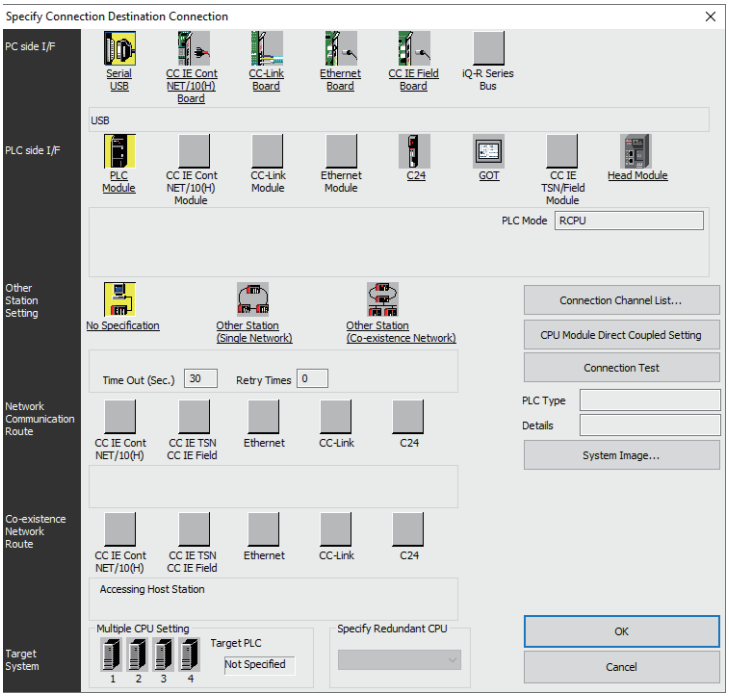

1. Click [Online] → [Current Connection Destination] on GX Works3.

Displays the [Specify Connection Destination] dialog.

2. Set [Specify Connection Destination].

- PC side I/F: Serial USB
- PLC side I/F: GOT
- Other Station Setting: No Specification

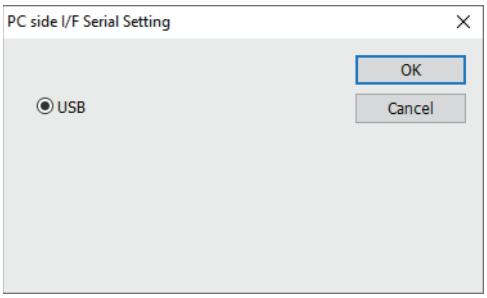

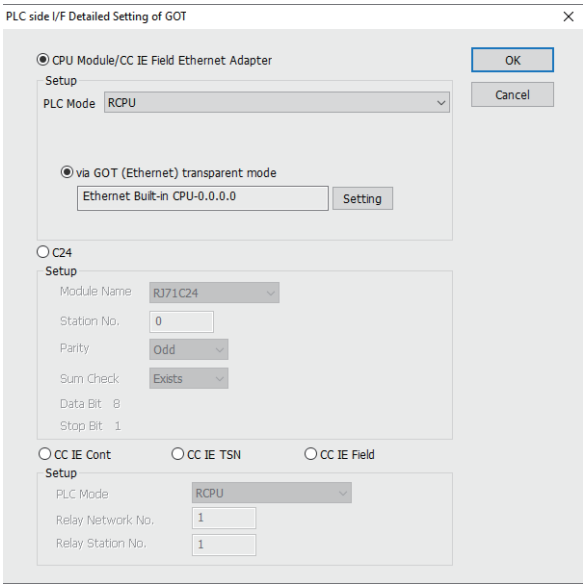

3. Double-click [GOT] of the PLC side I/F to display [PLC side I/F Detailed Setting of GOT].

4. On the [PLC side I/F Detailed Setting of GOT], mark the [via GOT(Ethernet) transparent mode] checkbox and click [Setting...].

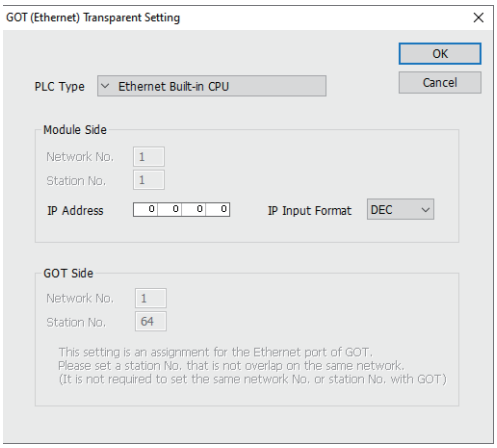

5. By clicking [Set], the [GOT (Ethernet) Transparent Setting] is displayed.

Here, set the built-in Ethernet port CPU or Ethernet module, which is firstly connected via a GOT.

Item		Description
[PLC Type]		Select the controller connected to the GOT by Ethernet. • [RJ71EN71] • [Ethernet Built-in CPU]
[Module Side]	[Network No.]	When [RJ71EN71] is set for [PLC type], specify the network number assigned to the Ethernet module.
	[Station No.]	When [RJ71EN71] is set for [PLC type], specify the station number assigned to the Ethernet module.
	[IP address]	Specify the IP address assigned to the built-in Ethernet port CPU or Ethernet module.

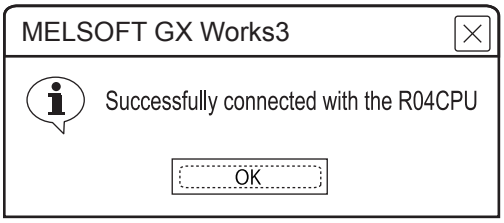

6. The screen returns to the [Connection Channel Setup]. Click [Connection Test] to check if GX Works3 has been connected to the RCPU.

• When connecting to FX5U, FX5UC, or FX5UJ

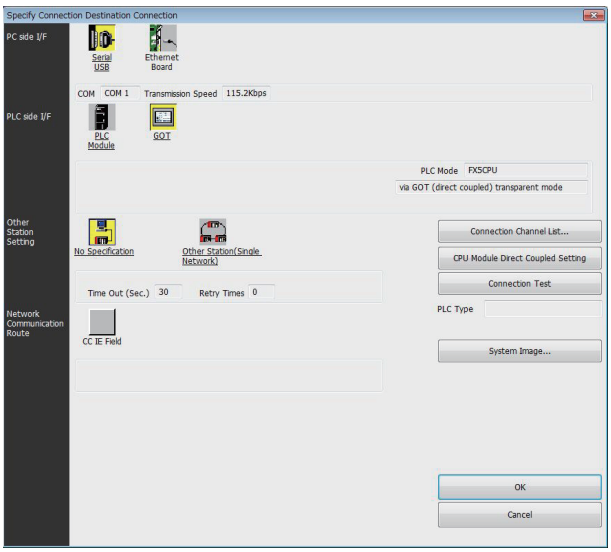

1. Click [Online] → [Current Connection Destination] → [Other connection method] in GX Works3.

Displays the [Specify Connection Destination] dialog.

2. Set the [Specify Connection Destination]:

• PC side I/F: Serial USB

• PLC side I/F: GOT

• Other Station Setting: No Specification

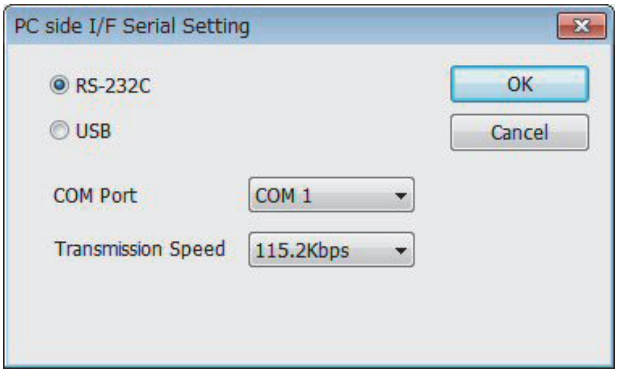

3. Double-click [Serial USB] of the PC side I/F to display [PC side I/F Serial Setting].

4. Select [USB] in the [PC side I/F Serial Setting] dialog.

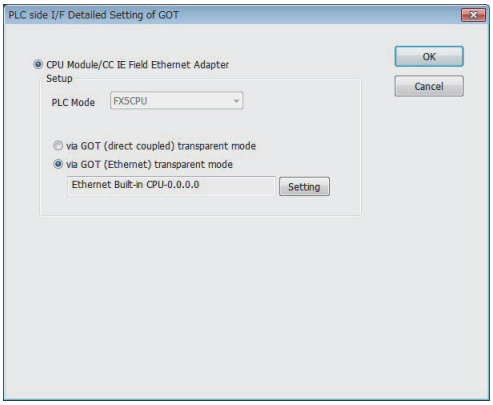

5. Double-click [GOT] of the PLC side I/F to display [PLC side I/F Detailed Setting of GOT].

6. On the [PLC side I/F Detailed Setting of GOT], mark the [via GOT (Ethernet) transparent mode] checkbox and click [Setting...].

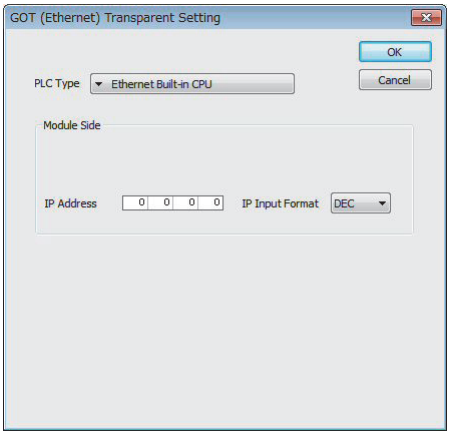

7. By clicking [Setting], the [GOT (Ethernet) transparent setting] is displayed.

Here, set the built-in Ethernet port CPU , which is firstly connected via a GOT.

8. Specify the IP address for [IP address] same as the IP address assigned to the built-in Ethernet port CPU.

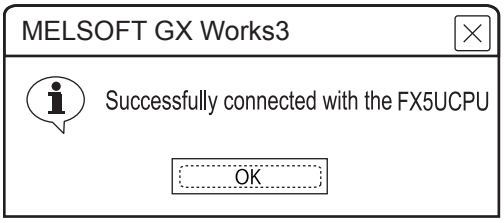

9. The screen returns to Specify Connection Destination Connection1. Click [Connection Test] to check if GX Works3 has been connected to the FX5CPU.

■Connecting the GOT and PLC in direct CPU connection (serial) (FX5U, FX5UC, FX5UJ)

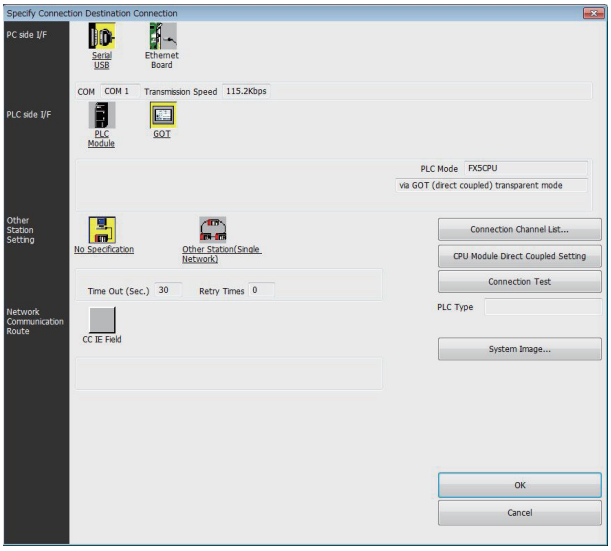

1. Click [Online] → [Current Connection Destination] → [Other connection method] in GX Works3.

Displays the [Specify Connection Destination] dialog.

2. Set the [Specify Connection Destination]:

- PC side I/F: Serial USB
- PLC side I/F: GOT
- Other Station Setting: No Specification:

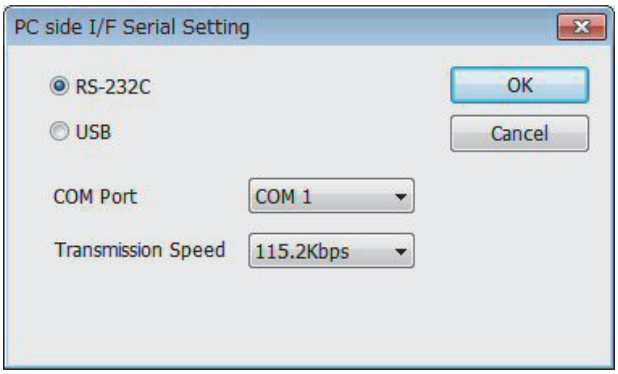

3. Double-click [Serial USB] of the PC side I/F to display [PC side I/F Serial Setting].

4. Select [USB] in the [PC side I/F Serial Setting] dialog.

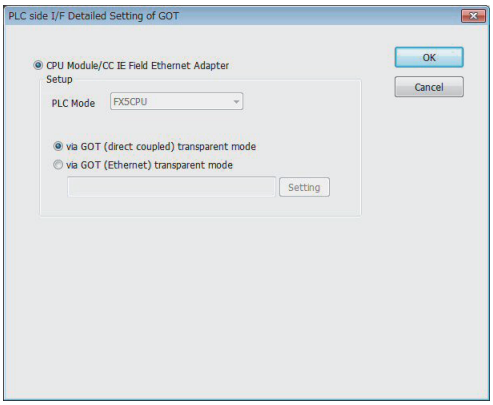

5. Double-click [GOT] of the PLC side I/F to display [PLC side I/F Detailed Setting of GOT].

6. Check-mark [via GOT (direct coupled) transparent mode] in [PLC side I/F Detailed Setting of GOT].

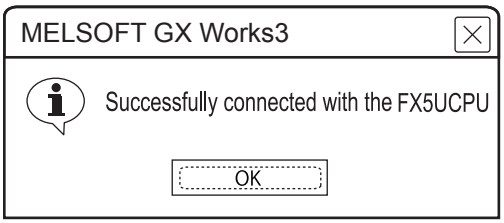

7. The screen returns to Specify Connection Destination Connection1. Click [Connection Test] to check if GX Works3 has been connected to the FX5UCPU.

■Connecting the GOT and PLC in serial communication connection (when connecting to RJ71C24)

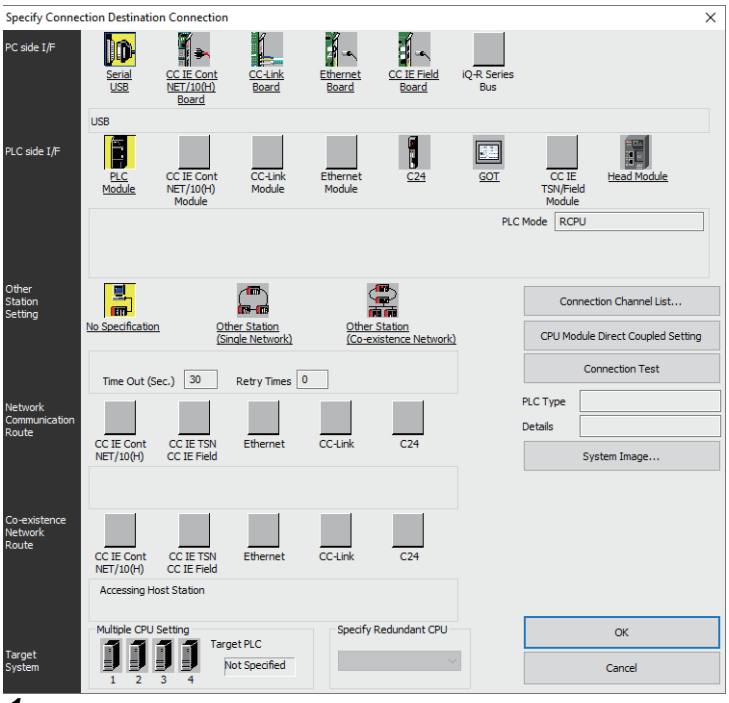

1. Click [Online] → [Current Connection Destination] on GX Works3.

Displays the [Specify Connection Destination] dialog.

2. Set [Specify Connection Destination].

- PC side I/F: Serial USB
- PLC side I/F: GOT
- Other Station Setting: No Specification

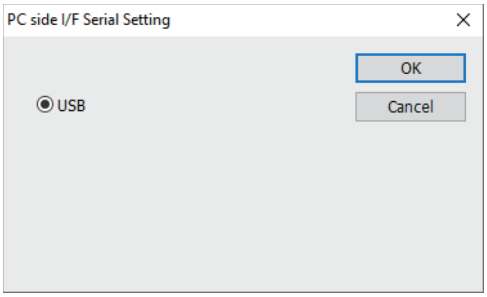

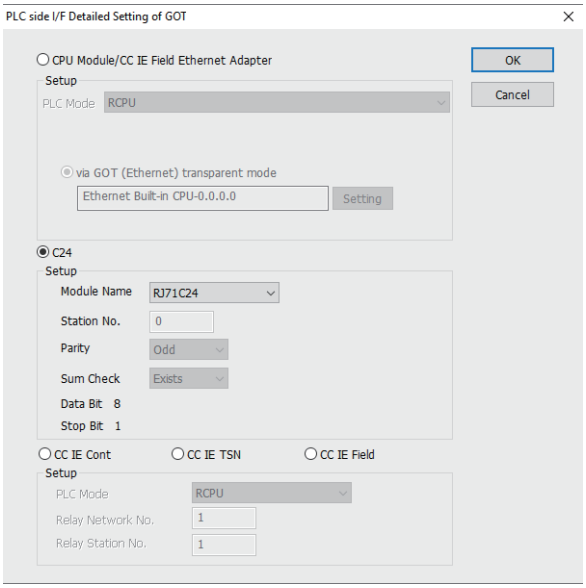

3. Double-click [GOT] of the PLC side I/F to display [PLC side I/F Detailed Setting of GOT].

4. Check-mark [C24] in [PLC side I/F Detailed Setting of GOT].

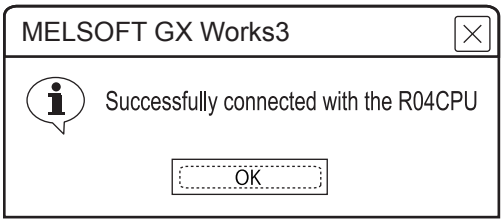

5. The screen returns to the [Connection Channel Setup]. Click [Connection Test] to check if GX Works3 has been connected to the RCPU.

■Connecting the GOT and PLC in CC-Link IE controller network connection

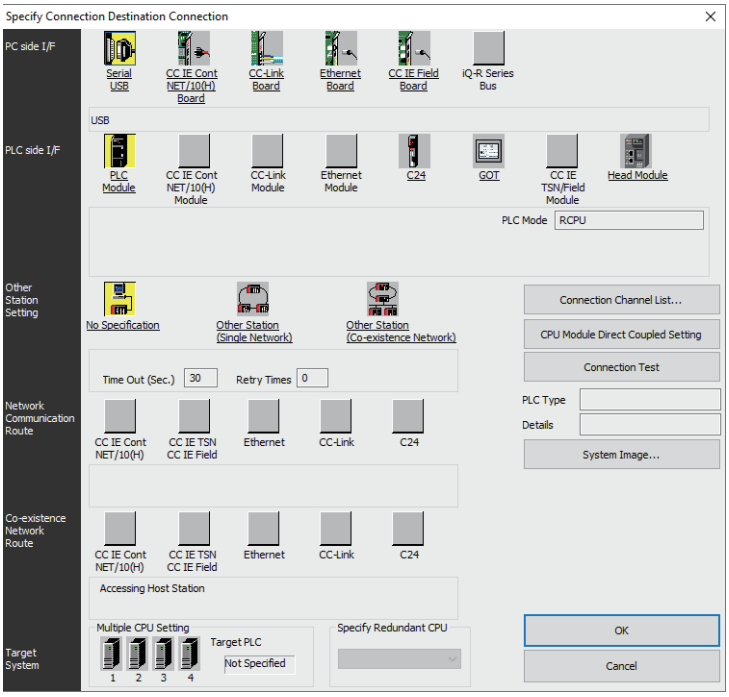

1. Click [Online] → [Current Connection Destination] on GX Works3.

Displays the [Specify Connection Destination] dialog.

2. Set [Specify Connection Destination].

- PC side I/F: Serial USB
- PLC side I/F: GOT
- Other Station Setting: No Specification

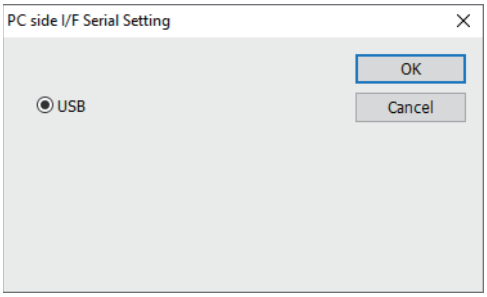

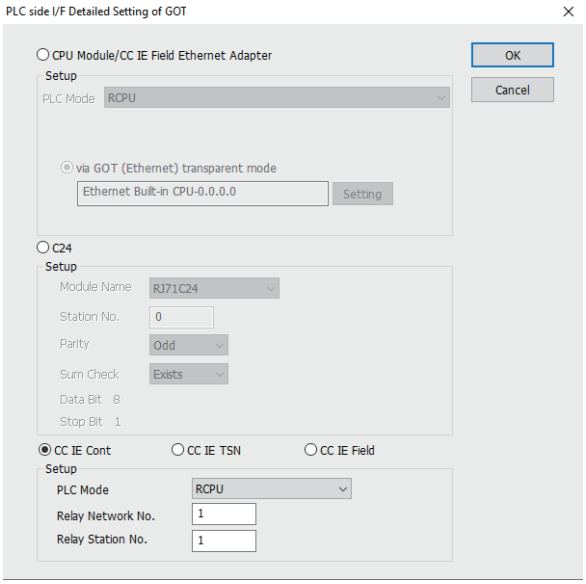

3. Double-click [GOT] of the PLC side I/F to display [PLC side I/F Detailed Setting of GOT].

4. Check-mark [CC IE Cont] in [Detail setting for GOT and PLC connection].

5. Set [Setup].

Set [Relay Station No.] as follows:

- When the target PLC has the same network No. as that of the GOT

Set the number assigned to the PLC that is targeted by using the transparent function and CC-Link IE controller network module.

- When the target PLC has a different network No. from that of the GOT

Set the number assigned the PLC that is used as a relay station and CC-Link IE controller network module.

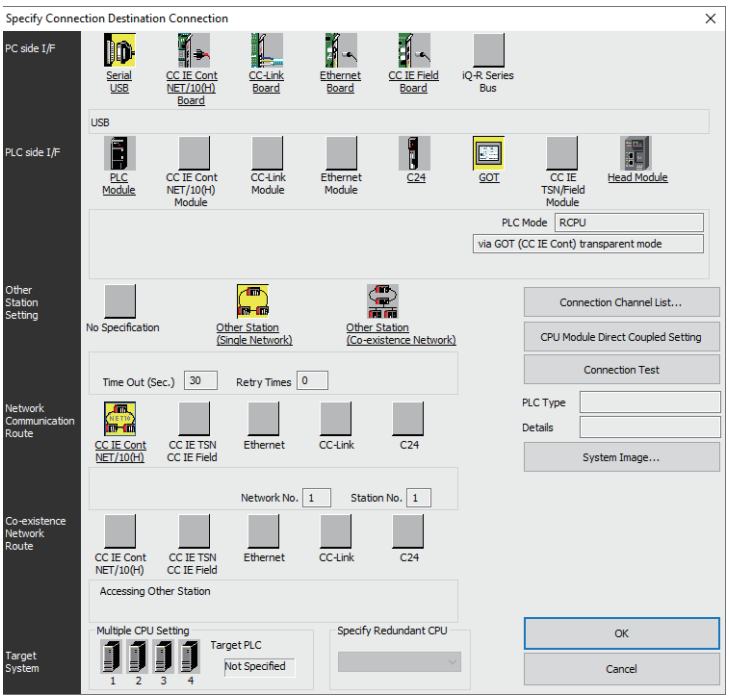

6. Return to [Specify Connection Destination], click [Other Station (Single Network)], and double-click [CC IE Cont NET/10(H)].

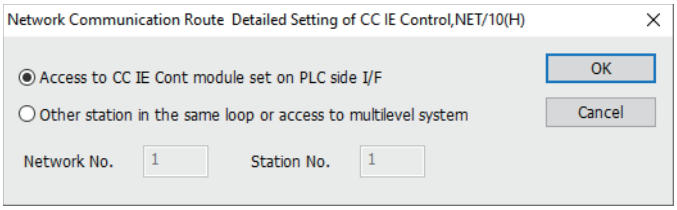

7. Set as shown below and click [OK].

- When the GOT and PLC are on the same network

Select [Access to CC IE Cont module set on PLC side I/F].

- When the GOT and PLC are on the different networks

Select [Other station in the same loop or access to multilevel system] and set [Network No.] and [Station No.].

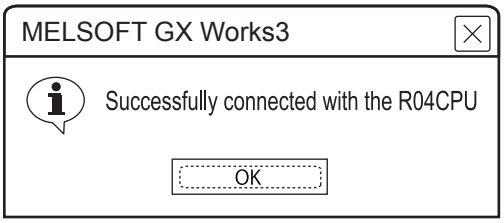

8. The screen returns to the [Connection Channel Setup]. Click [Connection Test] to check if GX Works3 has been connected to the RCPU.

■Connecting the GOT and PLC using the CC-Link IE TSN connection

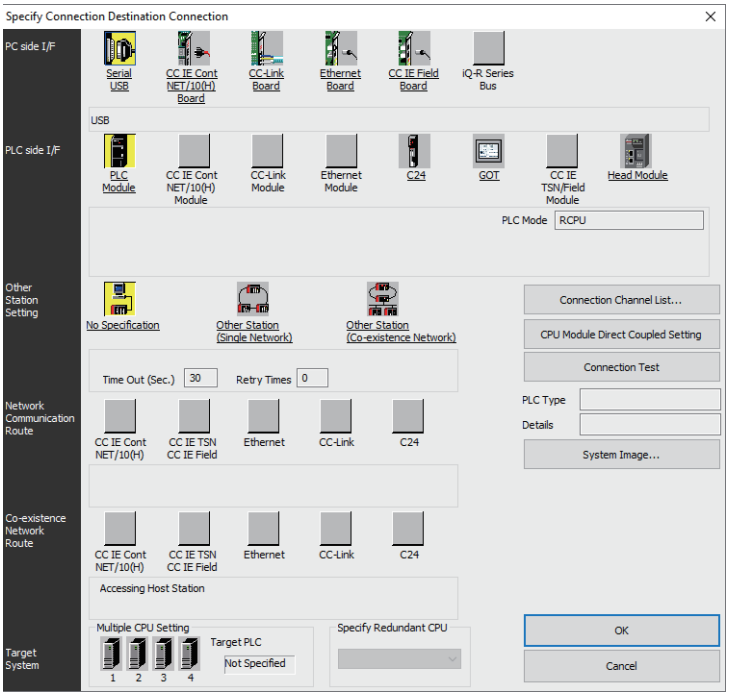

1. Click [Online] → [Current Connection Destination] on GX Works3.

Displays the [Specify Connection Destination] dialog.

2. Set [Specify Connection Destination].

- PC side I/F: Serial USB
- PLC side I/F: GOT
- Other Station Setting: No Specification

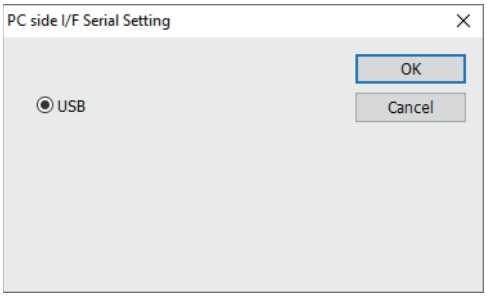

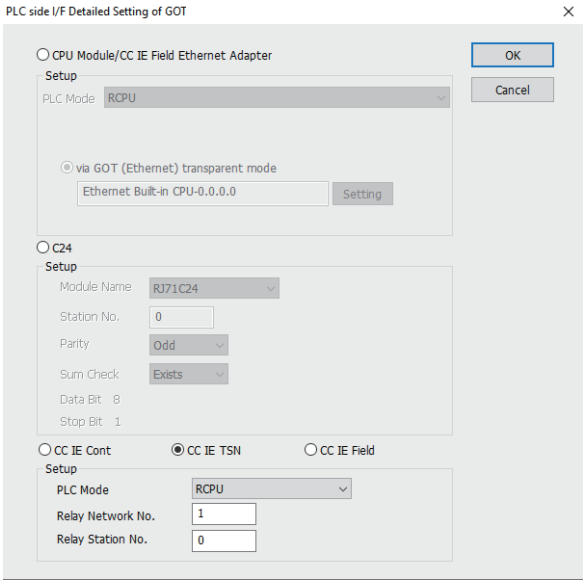

3. Double-click [GOT] of the PLC side I/F to display [PLC side I/F Detailed Setting of GOT].

4. Check-mark [CC IE TSN] in [Detail setting for GOT and PLC connection].

5. Set [Setup].

Set [Relay Station No.] as follows:

- When the target PLC has the same network No. as that of the GOT

Set the number assigned to the PLC that is targeted by using the transparent function and CC-Link IE TSN master/local module.

- When the target PLC has a different network No. from that of the GOT

Set the number assigned to the PLC that is used as a relay station and CC-Link IE TSN master/local module.

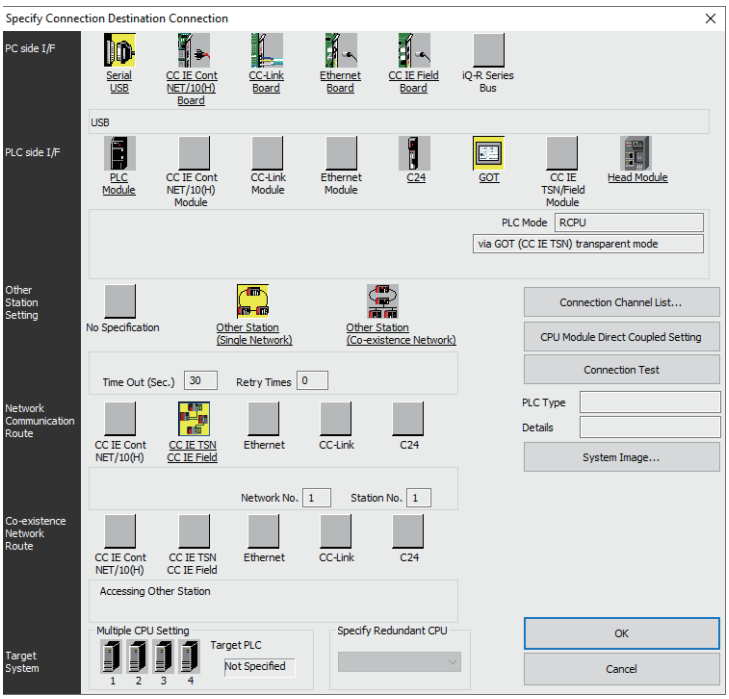

6. Return to [Specify Connection Destination], click [Other Station (Single Network)], and double-click [CC IE TSN CC IE Field].

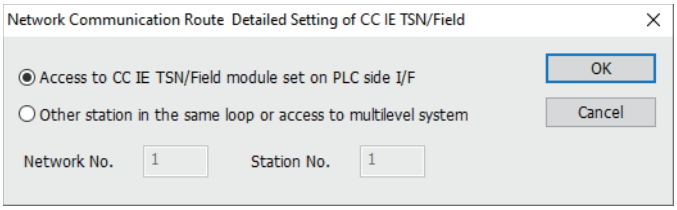

7. Set as shown below and click [OK].

- When the GOT and PLC are on the same network

Select [Access to CC IE TSN/Field module set on PLC side I/F].

- When the GOT and PLC are on the different networks

Select [Other station in the same loop or access to multilevel system] and set [Network No.] and [Station No.].

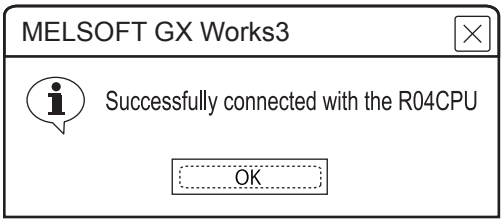

8. The screen returns to the [Connection Channel Setup]. Click [Connection Test] to check if GX Works3 has been connected to the RCPU.

■Connecting the GOT and PLC in CC-Link IE field network connection

- When connecting to RCPU

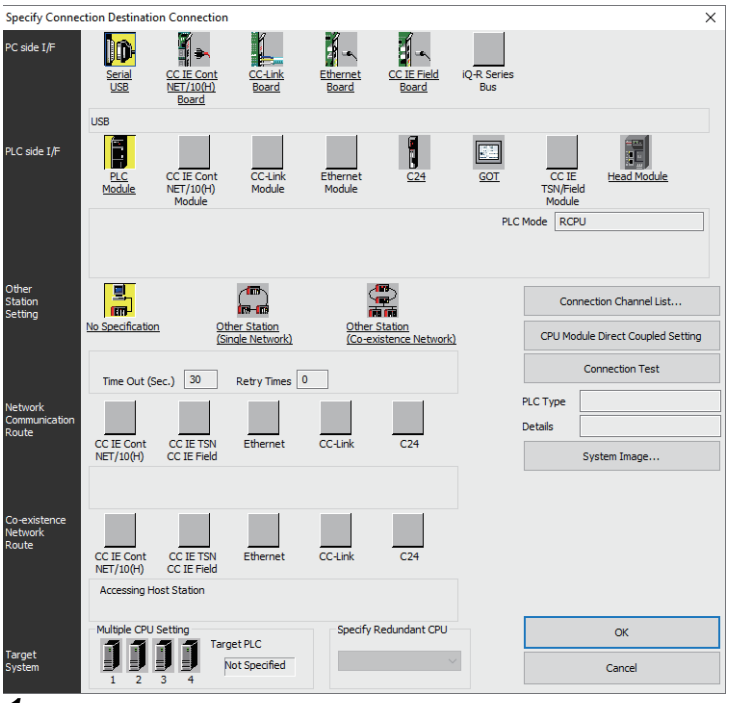

1. Click [Online] → [Current Connection Destination] on GX Works3.

Displays the [Specify Connection Destination] dialog.

2. Set [Specify Connection Destination].

- PC side I/F: Serial USB
- PLC side I/F: GOT
- Other Station Setting: No Specification

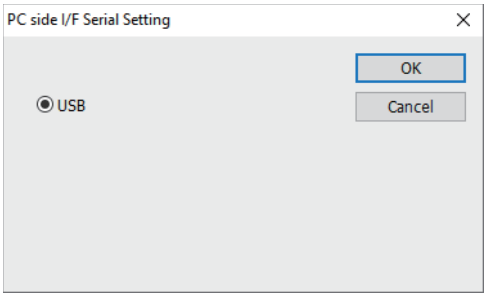

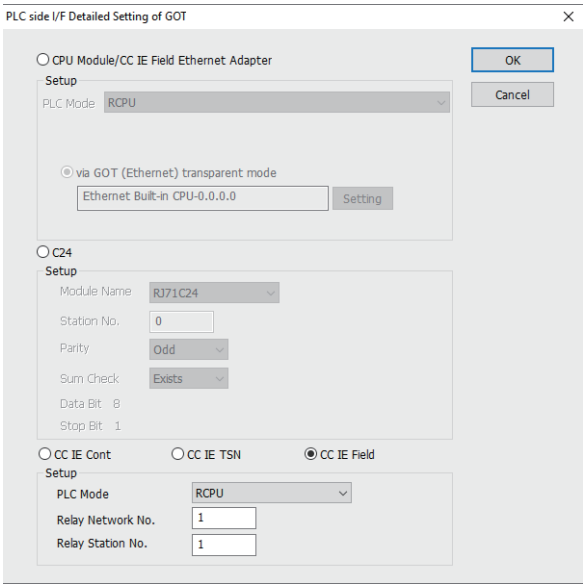

3. Double-click [GOT] of the PLC side I/F to display [PLC side I/F Detailed Setting of GOT].

4. Check-mark [CC IE Field] in [Detail setting for GOT and PLC connection].

5. Set [Setup].

Set [Relay Station No.] as follows:

- When the target PLC has the same network No. as that of the GOT

Set the number assigned to the PLC that is targeted by using the transparent function and CC-Link IE field network module.

- When the target PLC has a different network No. from that of the GOT

Set the number assigned the PLC that is used as a relay station and CC-Link IE field network module.

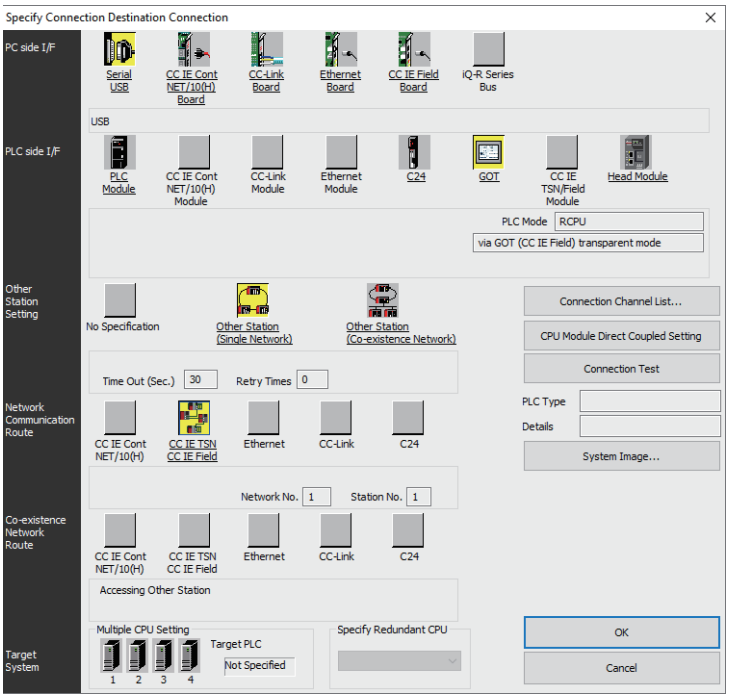

6. Return [Transfer Setup], click [Other Station (Single Network)], and double-click [CC IE Field].

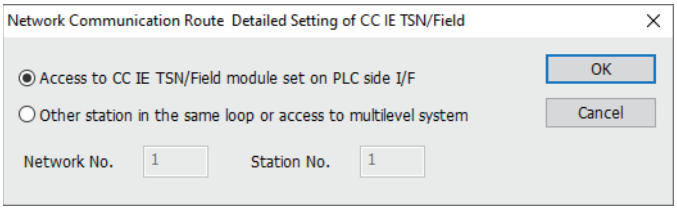

7. Set as shown below and click [OK].

- When the GOT and PLC are on the same network

Select [Access to CC IE TSN/Field module set on PLC side I/F].

- When the GOT and PLC are on the different networks

Select [Other station in the same loop or access to multilevel system] and set [Network No.] and [Station No.].

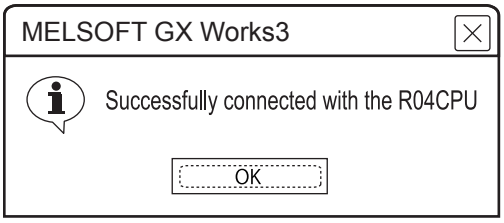

8. The screen returns to the [Connection Channel Setup]. Click [Connection Test] to check if GX Works3 has been connected to the RCPU.

- When connecting to FX5U, FX5UC, or FX5UJ

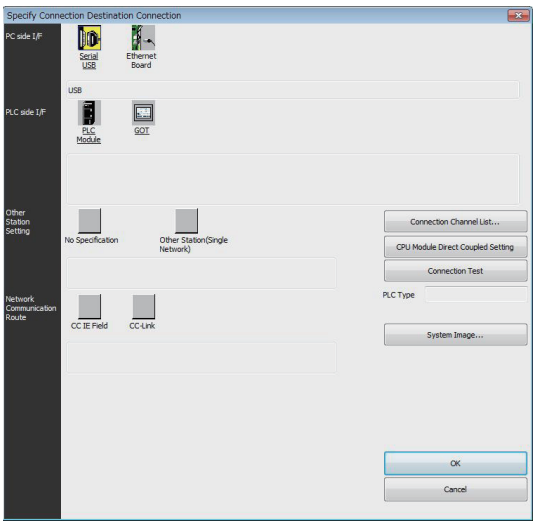

1. Click [Online] → [Current Connection Destination] → [Other connection method] in GX Works3.

Displays the [Specify Connection Destination] dialog.

2. Set [Specify Connection Destination].

- PC side I/F: Serial USB
- PLC side I/F: GOT
- Other Station Setting: No Specification

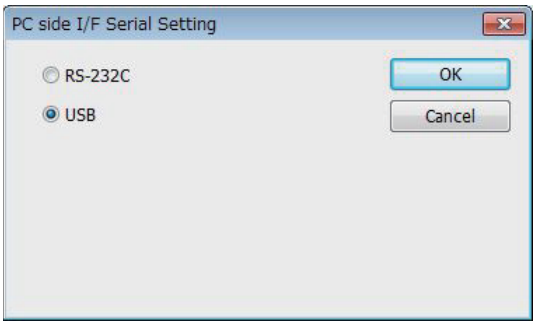

3. Double-click [GOT] of the PLC side I/F to display [PLC side I/F Detailed Setting of GOT].

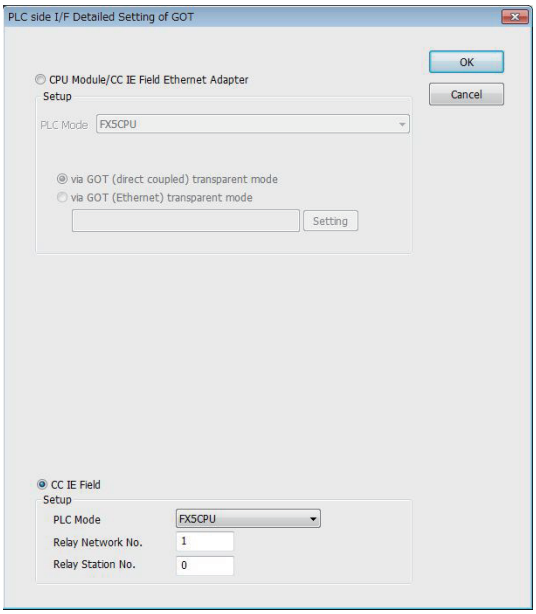

4. Check-mark [CC IE Field] in [Detail setting for GOT and PLC connection].

5. Set the [CPU mode] and [Relay network No.] and [Relay station No.].

• When the target PLC has the same network No. as that of the GOT

Set the number assigned to the PLC that is targeted by using the transparent function and CC-Link IE field network module.

• When the target PLC has a different network No. from that of the GOT

Set the number assigned the PLC that is used as a relay station and CC-Link IE field network module.

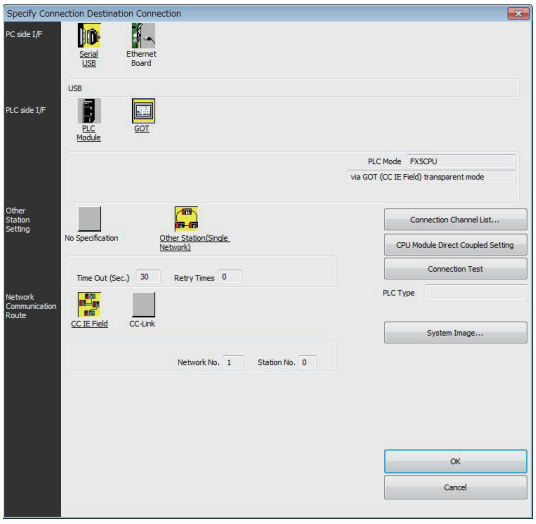

6. Return [Transfer Setup], click [Other Station (Single Network)], and double-click [CC IE Field].

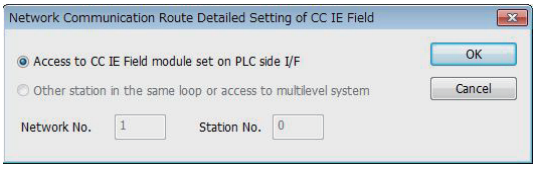

7. Set as shown below and click [OK].

• When the GOT and PLC are on the same network

Select [Access to CC IE Field module set on PLC side I/F].

• When the GOT and PLC are on the different networks

Select [Other station in the same loop or access to multilevel system] and set [Network No.] and [Station No.].

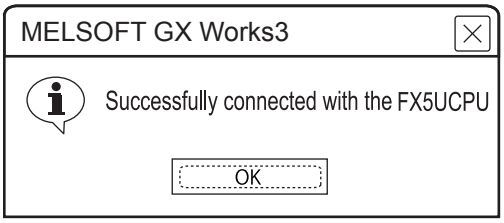

8. The screen returns to the [Connection Channel Setup]. Click [Connection Test] to check if GX Works3 has been connected to the FX5CPU.

When connecting the GOT and the personal computer by Ethernet

■Connecting the GOT and PLC in direct CPU connection (serial) (FX5U, FX5UC, FX5UJ)

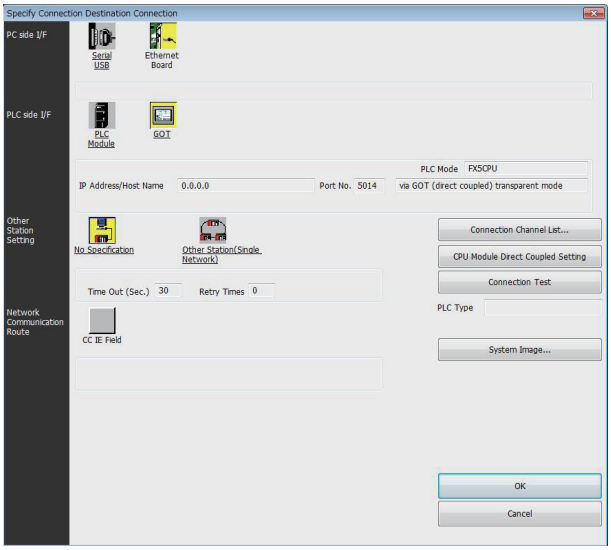

1. Click [Online] → [Current Connection Destination] → [Other connection method] in GX Works3.

Displays the [Specify Connection Destination] dialog.

2. Set [Specify Connection Destination].

- PC side I/F: Ethernet Board
- PLC side I/F: GOT
- Other Station Setting: No Specification

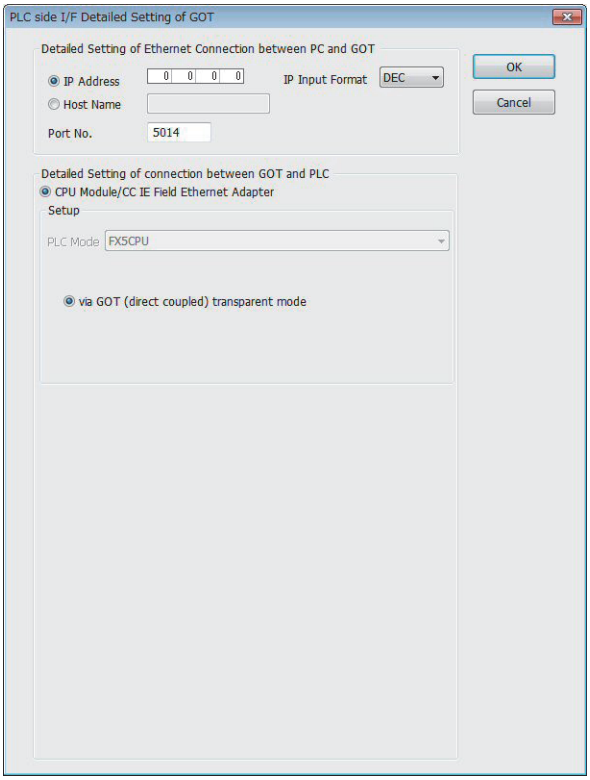

3. Double-click [GOT] of the PLC side I/F to display [PLC side I/F Detailed Setting of GOT].

4. [Set the IP address and port No. in [Ethernet detail setting for PC and GOT connection].

Check the IP address and port number on the GOT side in the [GOT Ethernet Setting] window in GT Designer3.

For the details, refer to the following.

GT Designer3 (GOT2000) Screen Design Manual

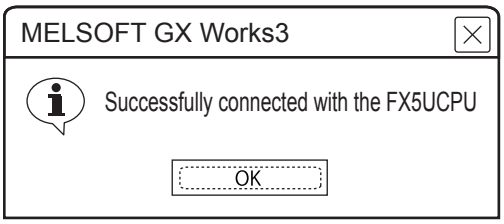

5. The screen returns to the [Connection Channel Setup]. Click [Connection Test] to check if GX Works3 has been connected to the FX5CPU.

■Connecting the GOT and PLC in serial communication connection (when connecting to RJ71C24)

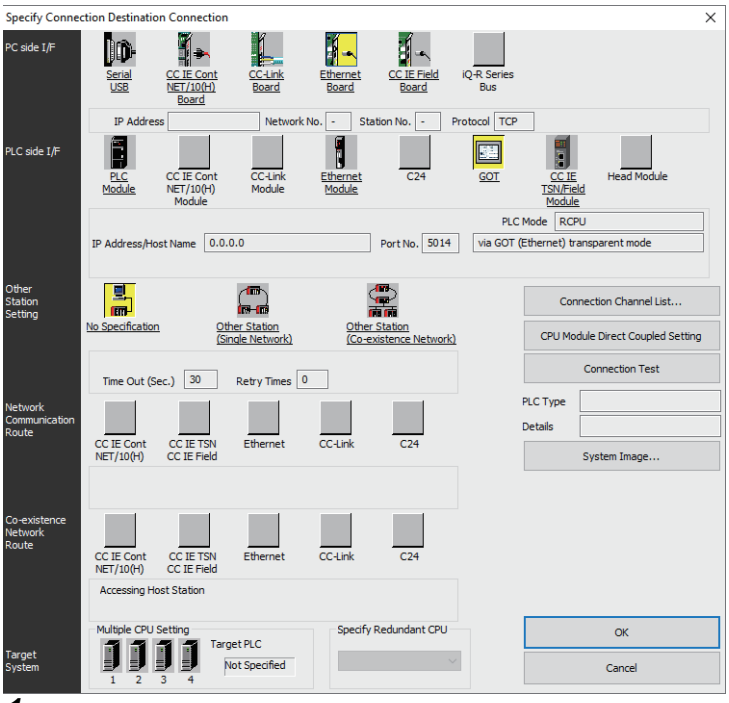

1. Click [Online] → [Current Connection Destination] on GX Works3.

Displays the [Specify Connection Destination] dialog.

2. Set [Specify Connection Destination].

- PC side I/F: Ethernet Board
- PLC side I/F: GOT
- Other Station Setting: No Specification

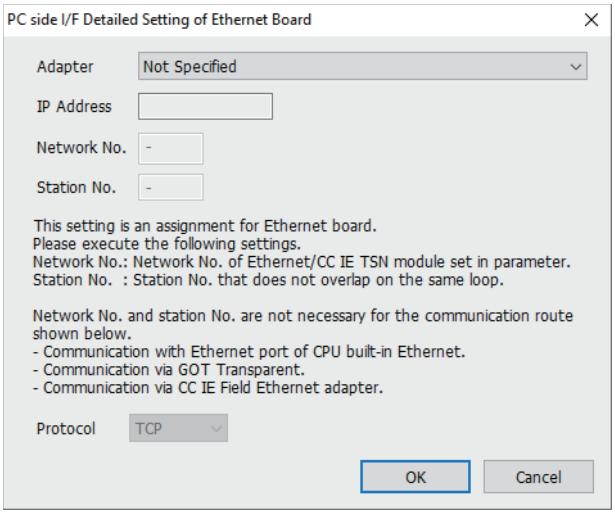

3. Double-click [Ethernet Board] of the PC side I/F to display [PC side I/F Ethernet Board Setting].

4. Network No. and Station No. are not required to be changed (default) because they are not used.

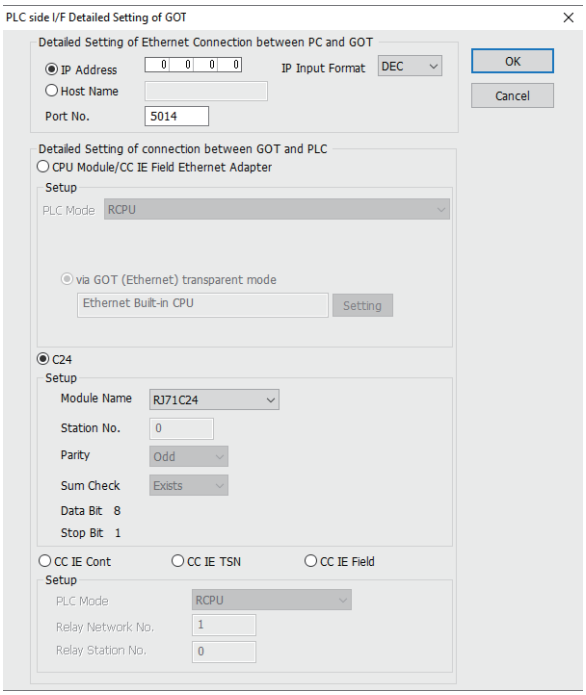

5. Double-click [GOT] of the PLC side I/F to display [PLC side I/F Detailed Setting of GOT].

6. Set the IP address and port No. in [Ethernet detail setting for PC and GOT connection].

Check the IP address and port number on the GOT side in the [GOT Ethernet Setting] window in GT Designer3.

For the details, refer to the following.

GT Designer3 (GOT2000) Screen Design Manual

7. Check-mark [C24] in [Detail setting for GOT and PLC connection].

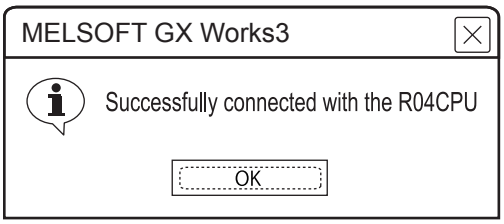

8. The screen returns to the [Connection Channel Setup]. Click [Connection Test] to check if GX Works3 has been connected to the RCPU.

■Connecting the GOT and PLC in CC-Link IE controller network connection

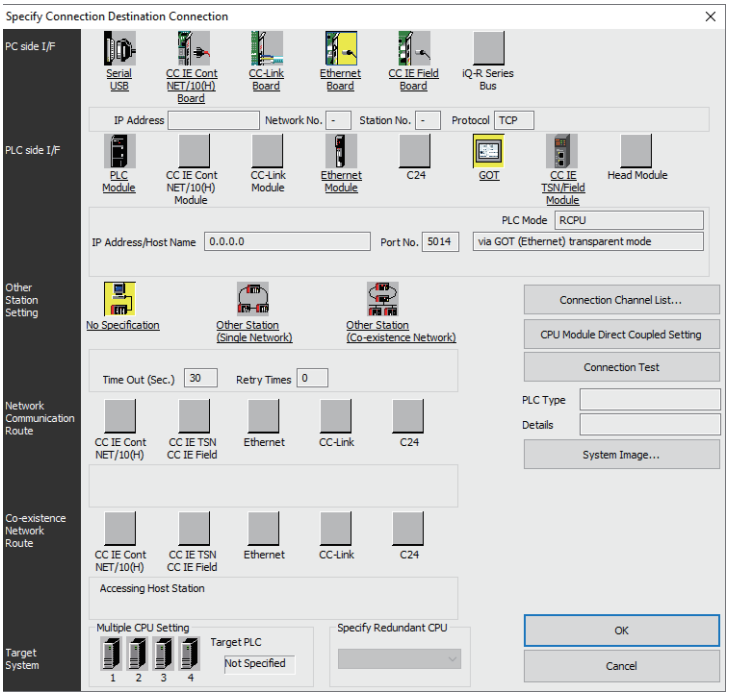

1. Click [Online] → [Current Connection Destination] on GX Works3.

Displays the [Specify Connection Destination] dialog.

2. Set [Specify Connection Destination].

- PC side I/F: Ethernet Board
- PLC side I/F: GOT
- Other Station Setting: No Specification

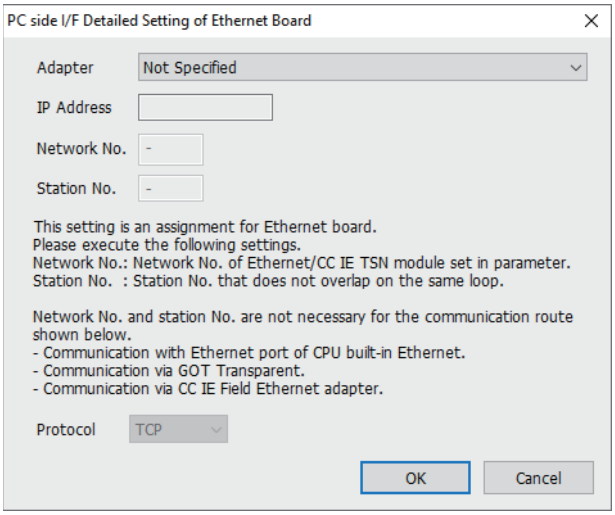

3. Double-click [Ethernet Board] of the PC side I/F to display [PC side I/F Ethernet Board Setting].

4. Network No. and Station No. are not required to be changed (default) because they are not used.

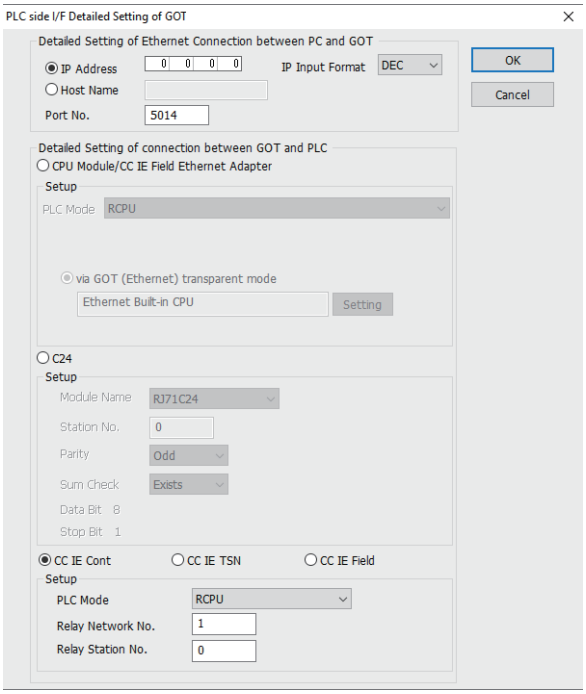

5. Double-click [GOT] of the PLC side I/F to display [PLC side I/F Detailed Setting of GOT].

6. Set the IP address and port No. in [Ethernet detail setting for PC and GOT connection].

Check the IP address and port number on the GOT side in the [GOT Ethernet Setting] window in GT Designer3.

For the details, refer to the following.

GT Designer3 (GOT2000) Screen Design Manual

7. Check-mark [CC IE Cont] in [Detail setting for GOT and PLC connection].

8. Set [Setup].

Set [Relay Station No.] as follows:

- When the target PLC has the same network No. as that of the GOT

Set the number assigned to the PLC that is targeted by using the transparent function and CC-Link IE controller network module.

- When the target PLC has a different network No. from that of the GOT

Set the number assigned the PLC that is used as a relay station and CC-Link IE controller network module.

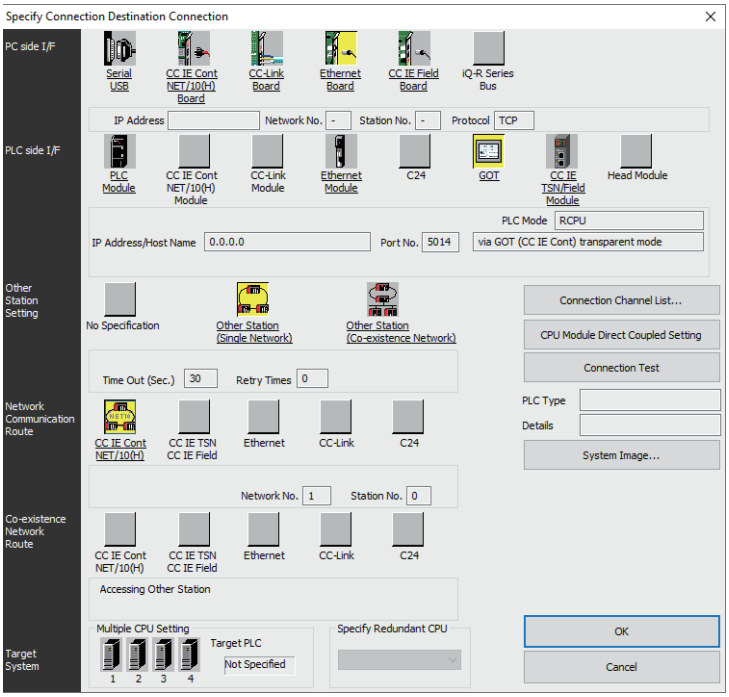

9. Return [Transfer Setup], click [Other Station (Single Network)], and double-click [CC IE Cont NET/10(H)].

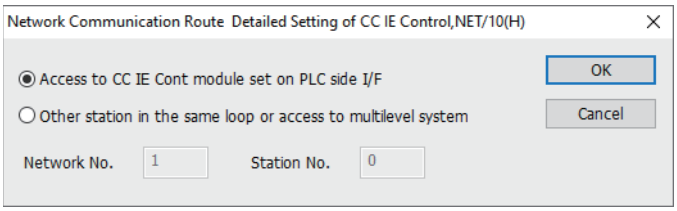

10. Set as shown below and click [OK].

- When the GOT and PLC are on the same network

Select [Access to CC IE Cont module set on PLC side I/F].

- When the GOT and PLC are on the different networks

Select [Other station in the same loop or access to multilevel system] and set [Network No.] and [Station No.].

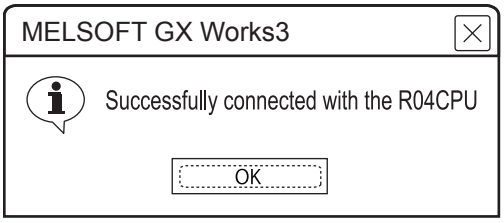

11. The screen returns to the [Connection Channel Setup]. Click [Connection Test] to check if GX Works3 has been connected to the RCPU.

■Connecting the GOT and PLC using the CC-Link IE TSN connection

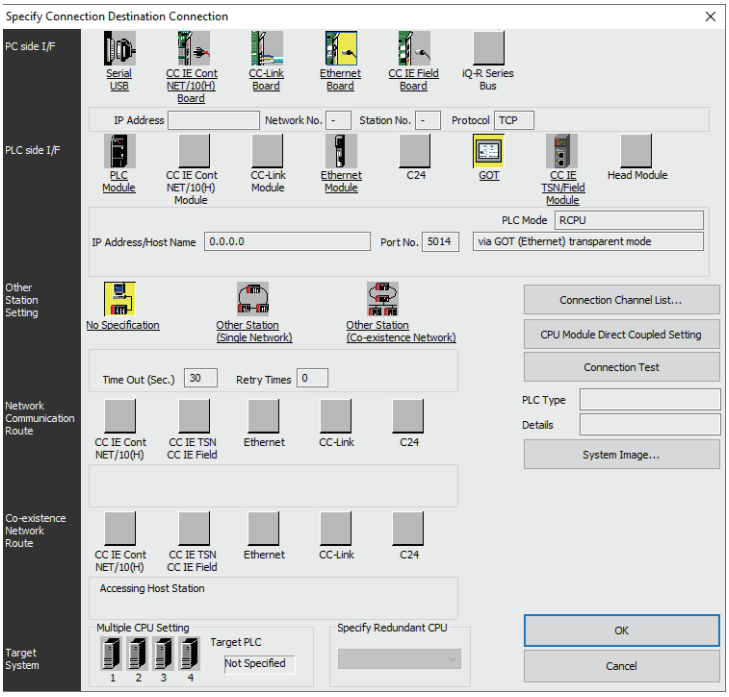

1. Click [Online] → [Current Connection Destination] on GX Works3.

Displays the [Specify Connection Destination] dialog.

2. Set [Specify Connection Destination].

- PC side I/F: Ethernet Board
- PLC side I/F: GOT
- Other Station Setting: No Specification

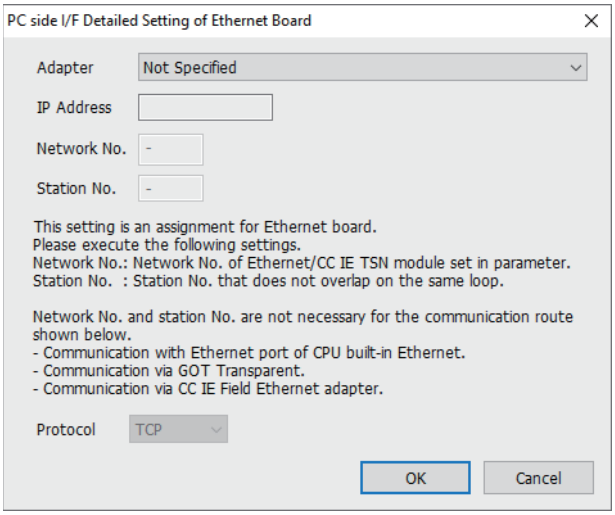

3. Double-click [Ethernet Board] of the PC side I/F to display [PC side I/F Ethernet Board Setting].

4. The network number and the station number are not used. The default settings need not be changed.

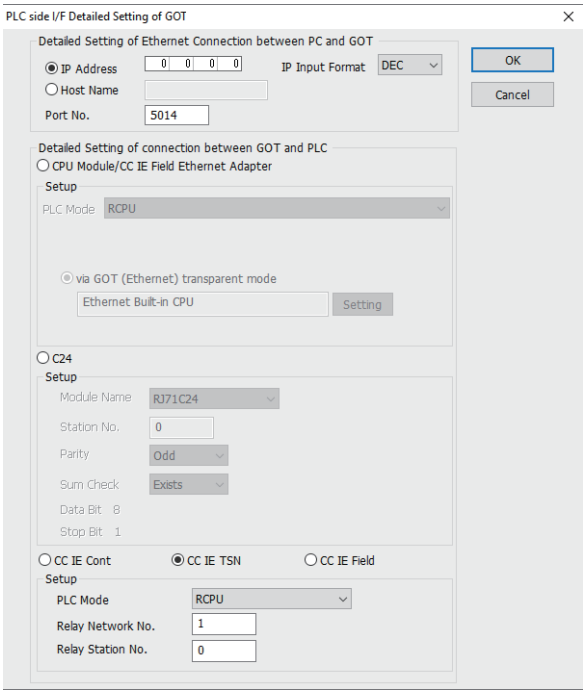

5. Double-click [GOT] of the PLC side I/F to display [PLC side I/F Detailed Setting of GOT].

6. Set the IP address and port No. in [Ethernet detail setting for PC and GOT connection].

Check the IP address and port number on the GOT side in the [GOT Ethernet Setting] window in GT Designer3.

For the details, refer to the following.

GT Designer3 (GOT2000) Screen Design Manual

7. Check-mark [CC IE TSN] in [Detail setting for GOT and PLC connection].

8. Set [Setup].

Set [Relay Station No.] as follows:

- When the target PLC has the same network No. as that of the GOT

Set the number assigned to the PLC that is targeted by using the transparent function and CC-Link IE TSN master/local module.

- When the target PLC has a different network No. from that of the GOT

Set the number assigned to the PLC that is used as a relay station and CC-Link IE TSN master/local module.

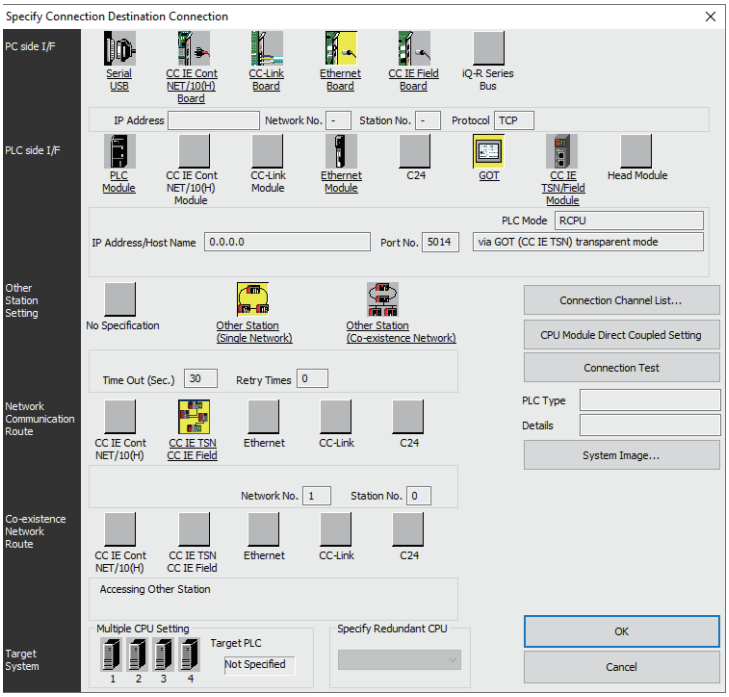

9. Return to [Specify Connection Destination], click [Other Station (Single Network)], and double-click [CC IE TSN CC IE Field].

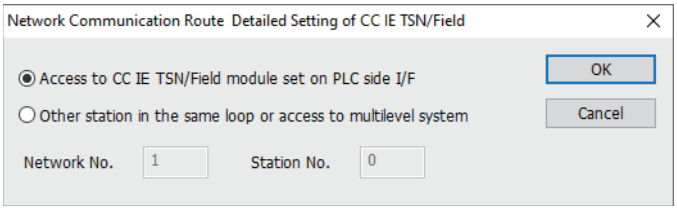

10. Set as shown below and click [OK].

- When the GOT and PLC are on the same network

Select [Access to CC IE TSN/Field module set on PLC side I/F].

- When the GOT and PLC are on the different networks

Select [Other station in the same loop or access to multilevel system] and set [Network No.] and [Station No.].

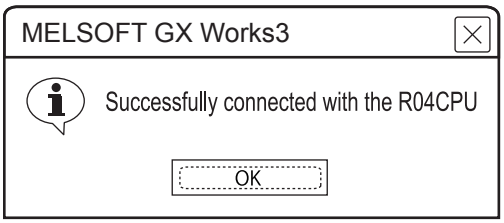

11. The screen returns to the [Connection Channel Setup]. Click [Connection Test] to check if GX Works3 has been connected to the RCPU.

■Connecting the GOT and PLC in CC-Link IE field network connection

- When connecting to RCPU

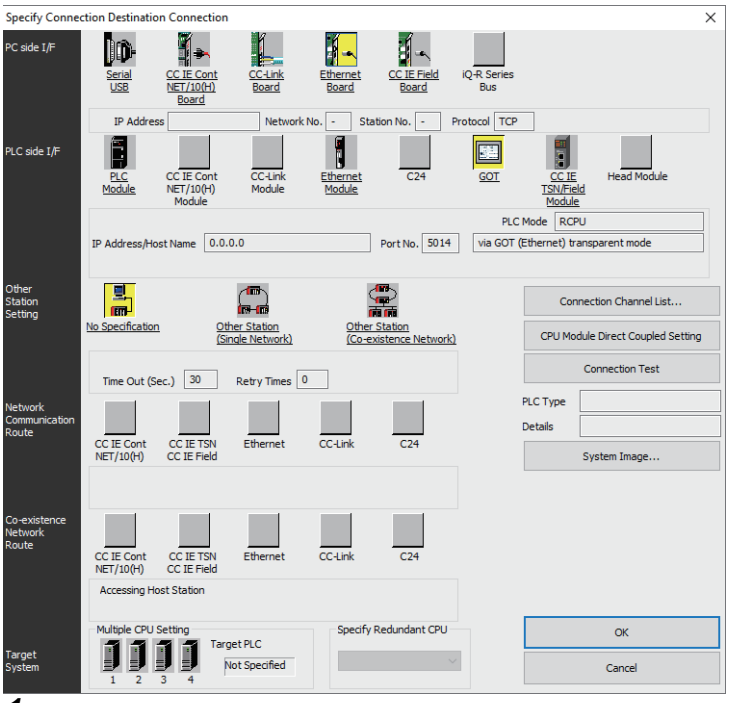

1. Click [Online] → [Current Connection Destination] on GX Works3.

Displays the [Specify Connection Destination] dialog.

2. Set [Specify Connection Destination].

- PC side I/F: Ethernet Board
- PLC side I/F: GOT
- Other Station Setting: No Specification

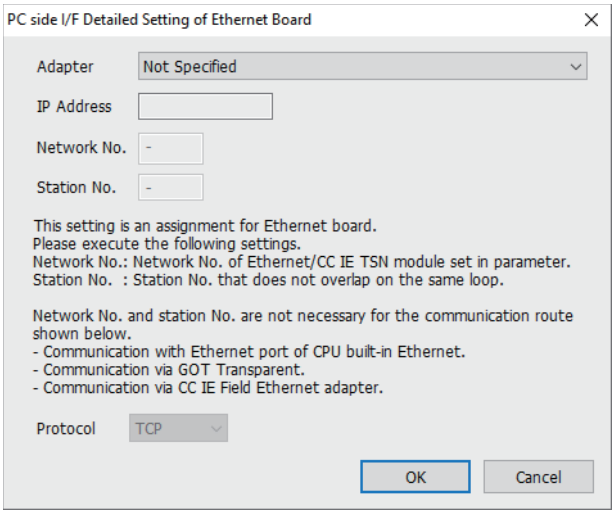

3. Double-click [Ethernet Board] of the PC side I/F to display [PC side I/F Ethernet Board Setting].

4. Network No. and Station No. are not required to be changed (default) because they are not used.

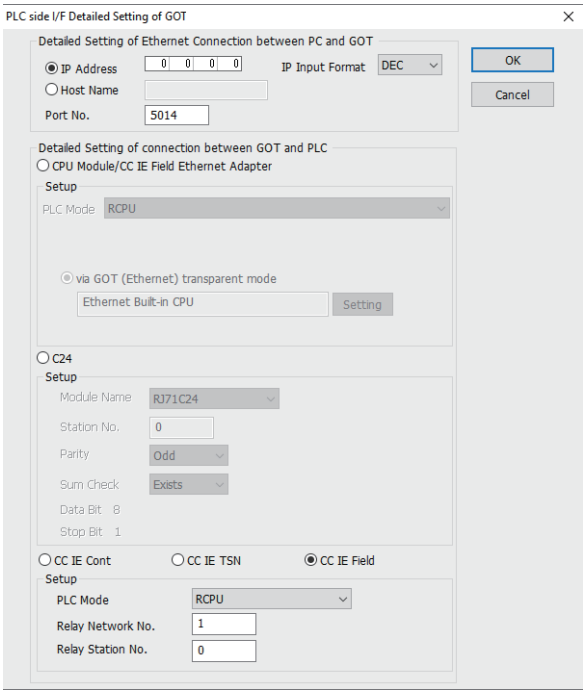

5. Double-click [GOT] of the PLC side I/F to display [PLC side I/F Detailed Setting of GOT].

6. Set the IP address and port No. in [Ethernet detail setting for PC and GOT connection].

Check the IP address and port number on the GOT side in the [GOT Ethernet Setting] window in GT Designer3.

For the details, refer to the following.

📖GT Designer3 (GOT2000) Screen Design Manual

7. Check-mark [CC IE Field] in [Detail setting for GOT and PLC connection].

8. Set [Setup].

Set [Relay Station No.] as follows:

- When the target PLC has the same network No. as that of the GOT

Set the number assigned to the PLC that is targeted by using the transparent function and CC-Link IE field network module.

- When the target PLC has a different network No. from that of the GOT

Set the number assigned the PLC that is used as a relay station and CC-Link IE field network module.

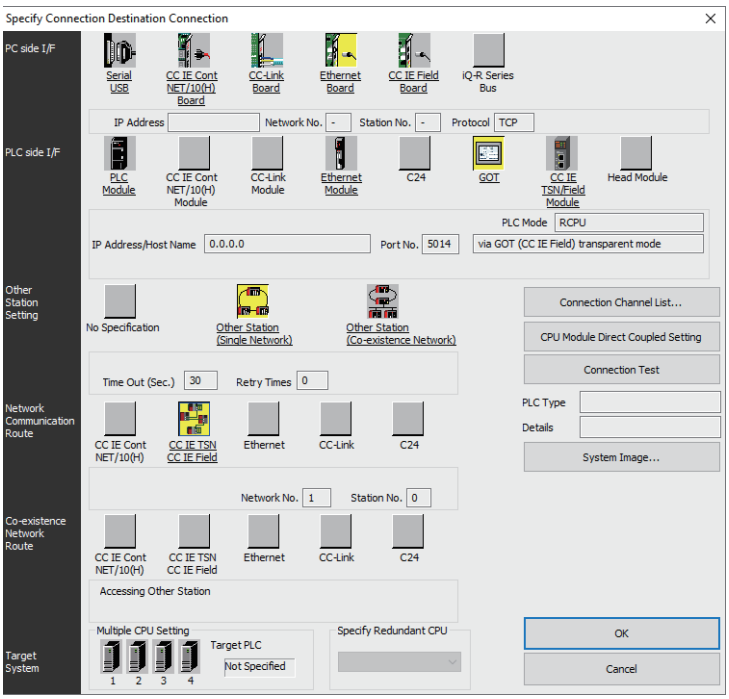

9. Return to [Specify Connection Destination], click [Other Station (Single Network)], and double-click [CC IE TSN CC IE Field].

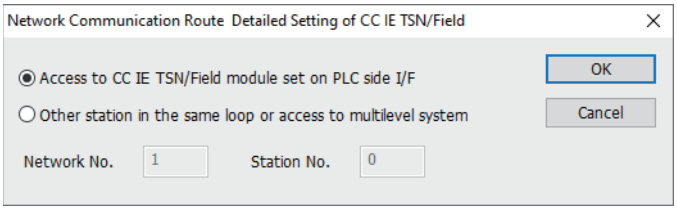

10. Set as shown below and click [OK].

- When the GOT and PLC are on the same network

Select [Access to CC IE TSN/Field module set on PLC side I/F].

- When the GOT and PLC are on the different networks

Select [Other station in the same loop or access to multilevel system] and set [Network No.] and [Station No.].

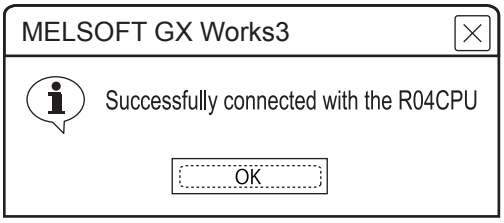

11. The screen returns to the [Connection Channel Setup]. Click [Connection Test] to check if GX Works3 has been connected to the RCPU.

- When connecting to FX5U, FX5UC, or FX5UJ

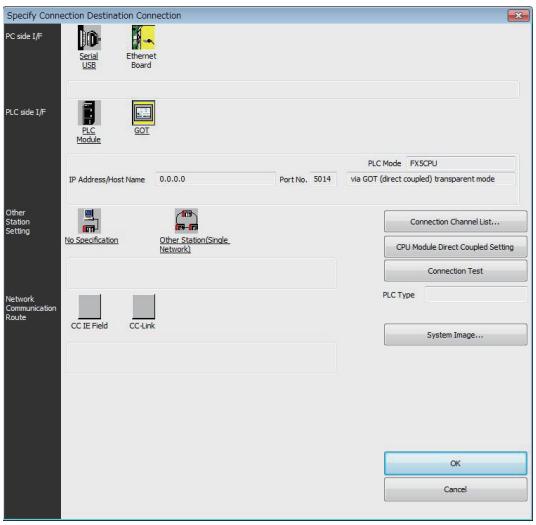

1. Click [Online] → [Current Connection Destination] → [Other connection method] in GX Works3.

Displays the [Specify Connection Destination] dialog.

2. Set [Specify Connection Destination].

- PC side I/F: Ethernet Board
- PLC side I/F: GOT
- Other Station Setting: No Specification

3. Double-click [GOT] of the PLC side I/F to display [PLC side I/F Detailed Setting of GOT].

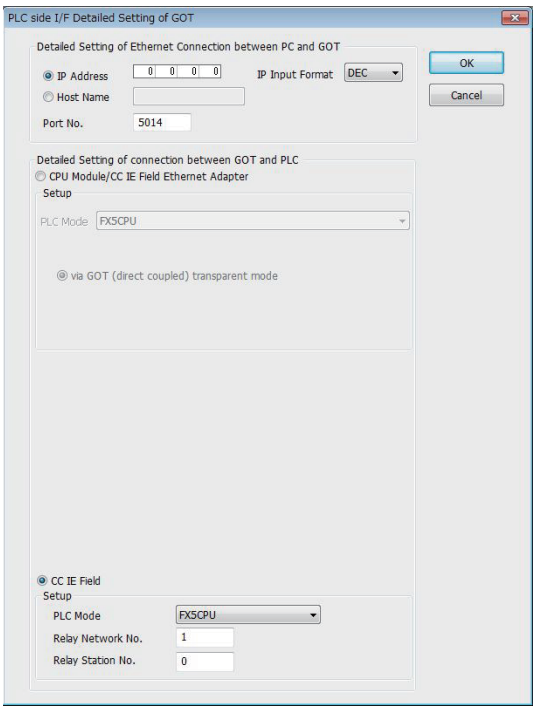

4. Set the IP address and port No. in [Ethernet detail setting for PC and GOT connection].

Check the IP address and port number on the GOT side in the [GOT Ethernet Setting] window in GT Designer3.

For the details, refer to the following.

📖GT Designer3 (GOT2000) Screen Design Manual

5. Check-mark [CC IE Field] in [Detail setting for GOT and PLC connection].

6. Set the [CPU mode] and [Relay network No.] and [Relay station No.].

• When the target PLC has the same network No. as that of the GOT

Set the number assigned to the PLC that is targeted by using the transparent function and CC-Link IE field network module.

• When the target PLC has a different network No. from that of the GOT

Set the number assigned the PLC that is used as a relay station and CC-Link IE field network module.

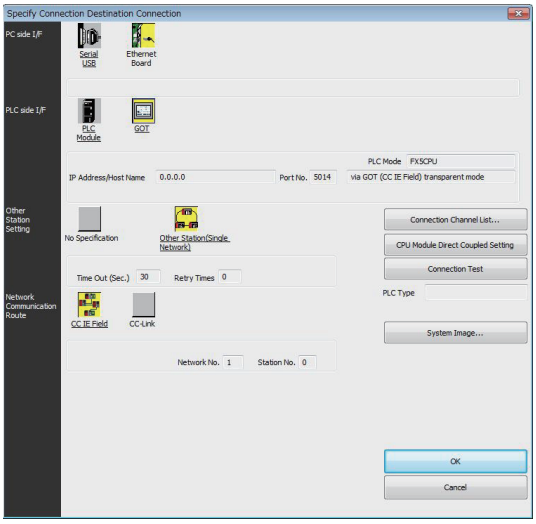

7. Return [Transfer Setup], click [Other Station (Single Network)], and double-click [CC IE Field].

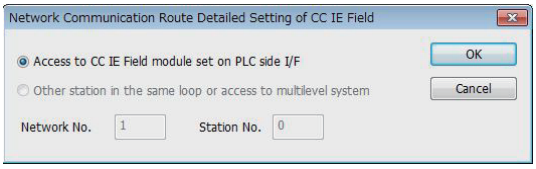

8. Set as shown below and click [OK].

• When the GOT and PLC are on the same network

Select [Access to CC IE Field module set on PLC side I/F].

• When the GOT and PLC are on the different networks

Select [Other station in the same loop or access to multilevel system] and set [Network No.] and [Station No.].

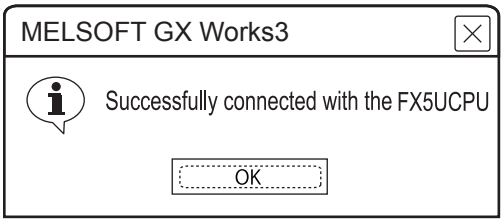

9. The screen returns to the [Connection Channel Setup]. Click [Connection Test] to check if GX Works3 has been connected to the FX5CPU.

■When connecting the GOT and PLC by Ethernet

Configure the settings in [Connected Ethernet Controller Setting] on the GOT.

The routing setting may also be needed for the GOT side depending on the system configuration.

For details, refer to the following procedure.

The following shows an example of connecting to MELSEC iQ-R series.

- When the routing setting is not needed for the GOT side

1) System configuration

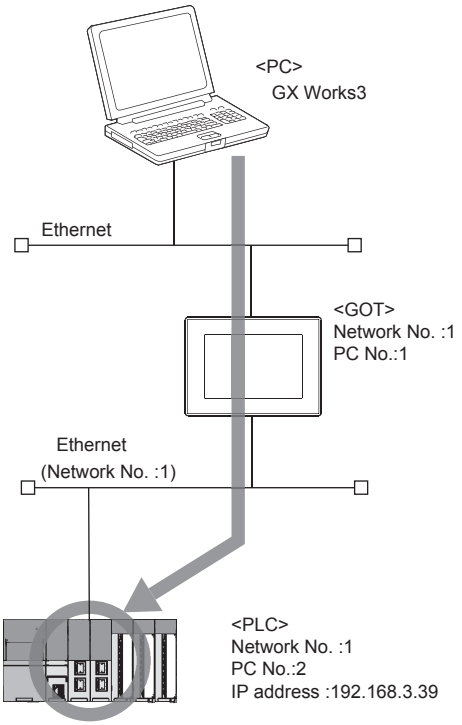

2) [Connected Ethernet Controller Setting] of GT Designer3

Set the network number, PLC number, and IP address of the PLC CPUs that support the FA transparent function on GT Designer3.

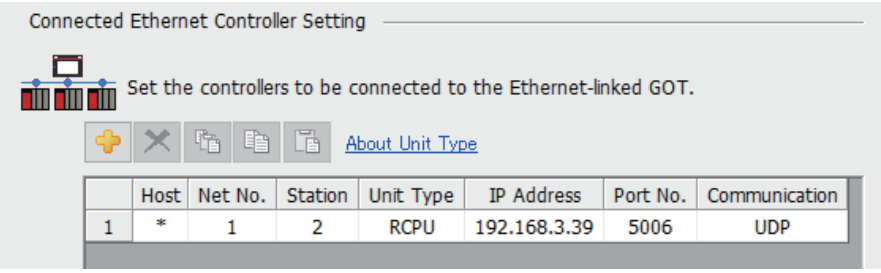

	Host	Net No.	Station	Unit Type	IP Address	Port No.	Communication
1	*	1	2	RCPU	192.168.3.39	5006	UDP

☞ Page 217 ETHERNET CONNECTION

3) GX Works3 settings

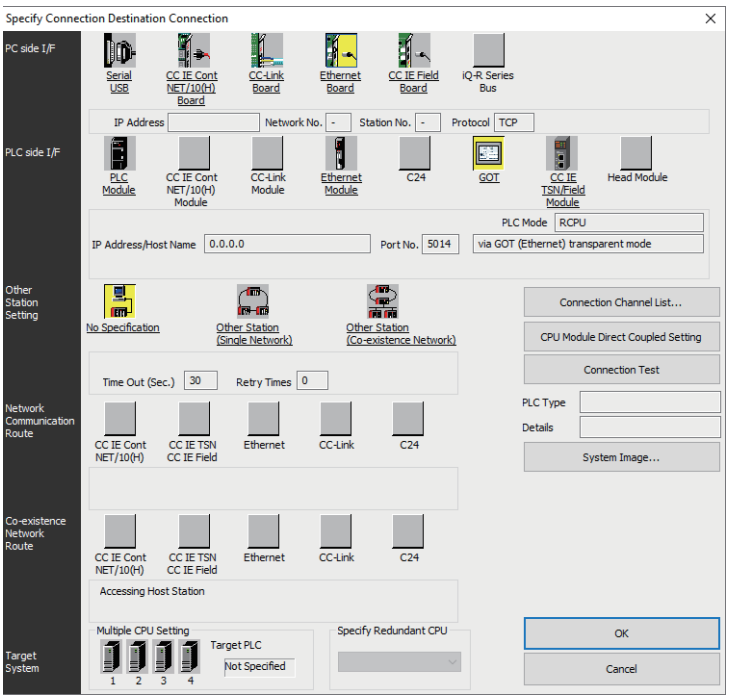

1. Click [Online] → [Current Connection Destination] on GX Works3.

Displays the [Specify Connection Destination] dialog.

2. Set [Specify Connection Destination].

- PC side I/F: Ethernet Board
- PLC side I/F: GOT
- Other Station Setting: No Specification

3. Double-click [GOT] of the PLC side I/F to display [PLC side I/F Detailed Setting of GOT].

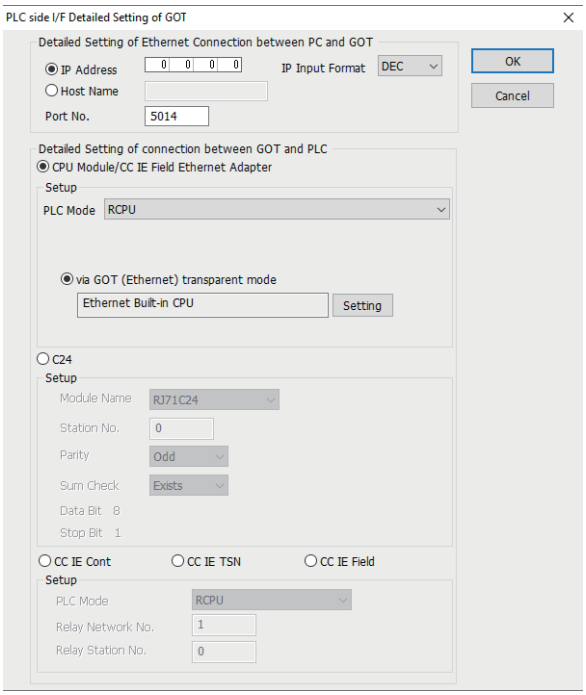

4. Set the IP address and port No. in [Ethernet detail setting for PC and GOT connection].

Check the IP address and port number on the GOT side in the [GOT Ethernet Setting] window in GT Designer3.

For the details, refer to the following.

📖GT Designer3 (GOT2000) Screen Design Manual

5. On the [Detail setting for GOT and PLC connection], check-mark [via GOT(Ethernet) transparent mode] and click [Setting].

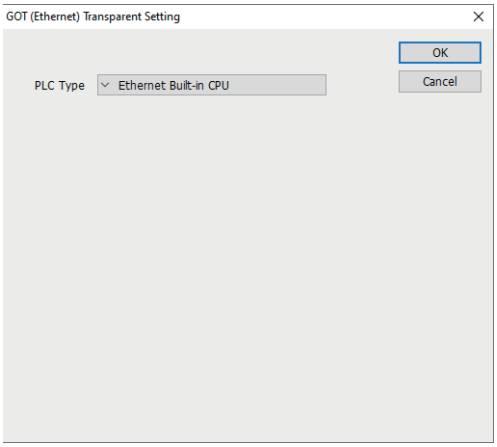

6. Specify [Built-in Ethernet port CPU] or [RJ71EN71] for the connection destination of the GOT.

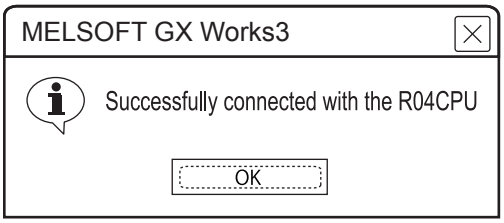

7. [Connection Test] to check if GX Works3 has been connected to the RCPU.

• When the routing setting is needed for the GOT side

1) System configuration

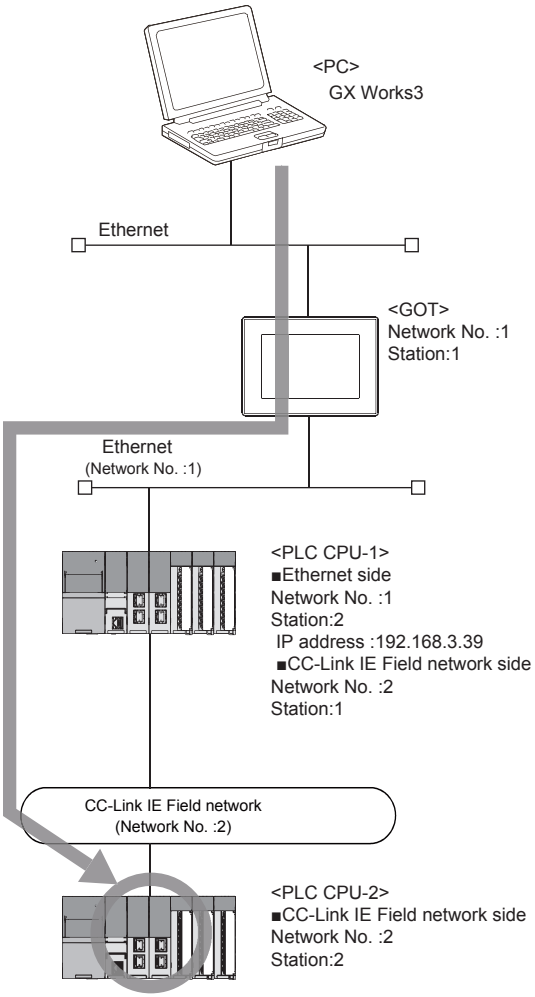

2) [Connected Ethernet Controller Setting] of GT Designer3

Set the network No., PC No., and IP address of the target PLC CPUs for the FA transparent function in GT Designer3.

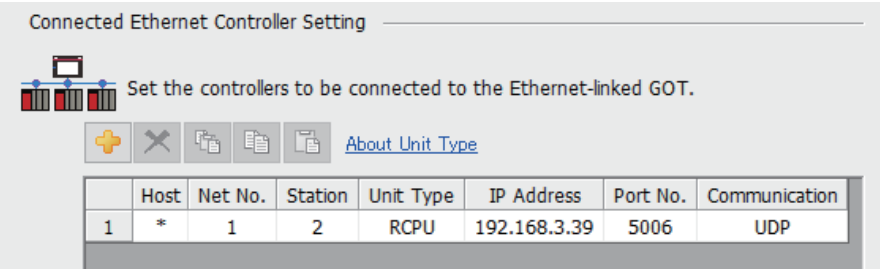

	Host	Net No.	Station	Unit Type	IP Address	Port No.	Communication
1	*	1	2	RCPU	192.168.3.39	5006	UDP

☞ Page 217 ETHERNET CONNECTION

Point

Since the MELSEC iQ-F series has no settings of the network number and station number, the routing setting cannot be configured.

The programmable controller which is set as [Host] in [Connected Ethernet Controller Setting] will be the target of the FA transparent function.

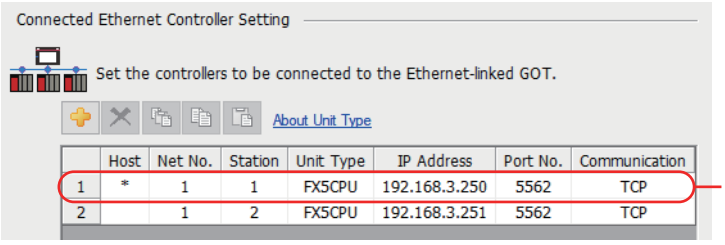

	Host	Net No.	Station	Unit Type	IP Address	Port No.	Communication
1	*	1	1	FX5CPU	192.168.3.250	5562	TCP
2		1	2	FX5CPU	192.168.3.251	5562	TCP

Target of the FA transparent function

3) Routing setting of GT Designer3

Be sure to set the transfer network No., relay network No., and relay station No. for CPUs supporting the FAtransparent function by GT Desinger3.

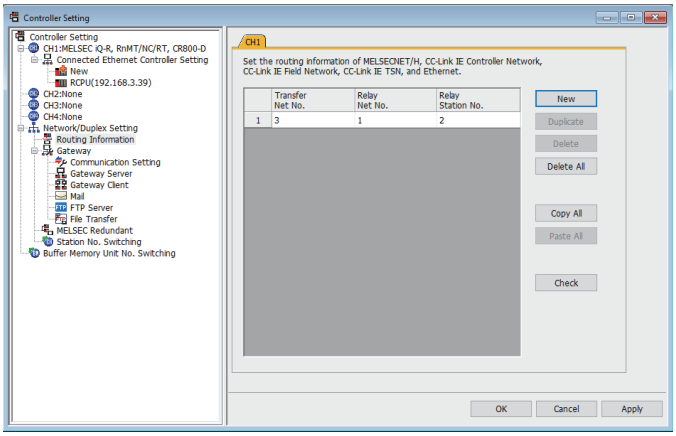

☞ Page 217 ETHERNET CONNECTION

4) GX Works3 settings

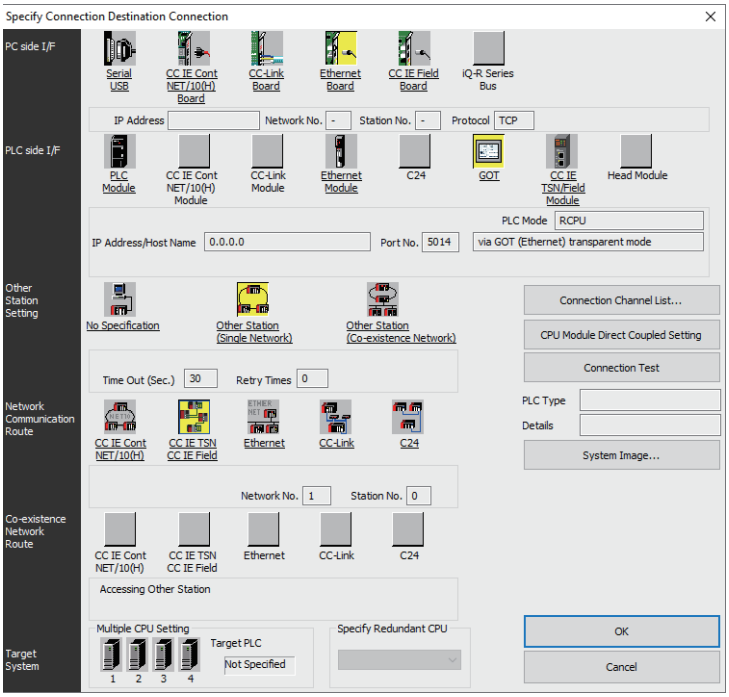

1. Click [Online] → [Current Connection Destination] on GX Works3.

Displays the [Specify Connection Destination] dialog.

2. Set [Specify Connection Destination].

- PC side I/F: Ethernet Board
- PLC side I/F: GOT
- Other Station Setting: Other Station (Single Network)
- Network path: CC IE TSN CC IE Field

3. Double-click [CC IE TSN CC IE Field] to set [Network No.] and [Station No.].

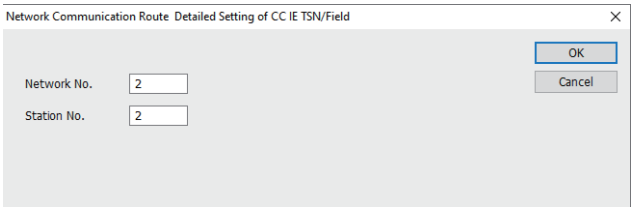

4. Double-click [GOT] of the PLC side I/F to display [PLC side I/F Detailed Setting of GOT].

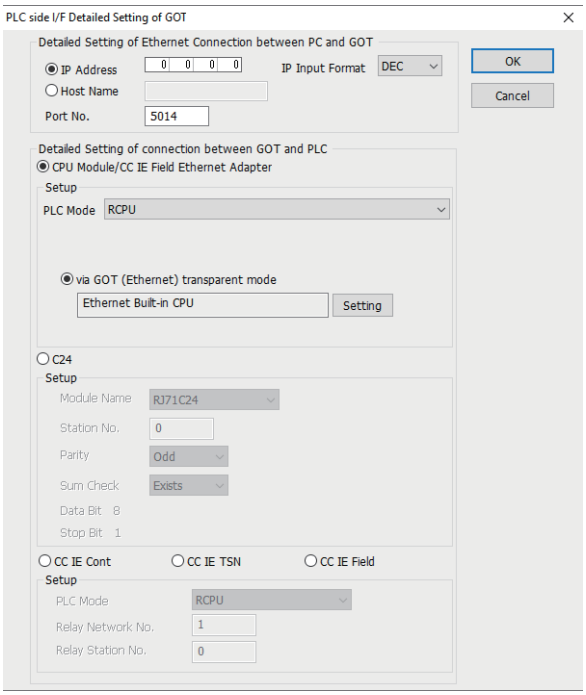

5. Set the IP address and port No. in [Ethernet detail setting for PC and GOT connection].

Check the IP address and port number on the GOT side in the [GOT Ethernet Setting] window in GT Designer3.

For the details, refer to the following.

📖GT Designer3 (GOT2000) Screen Design Manual

6. On the [Detail setting for GOT and PLC connection], check-mark [via GOT(Ethernet) transparent mode] and click [Setting].

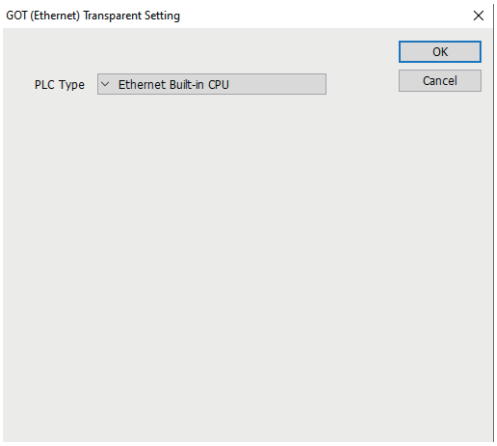

7. Specify [Built-in Ethernet port CPU] or [RJ71EN71] for the connection destination of the GOT.

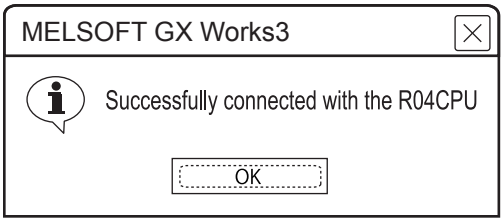

8. [Connection Test] to check if GX Works3 has been connected to the RCPU.

Accessing by CW Configurator

The following shows the procedure to set the FA transparent function of CW Configurator.

When connecting the GOT and the personal computer by USB

■Connecting the GOT and PLC in Ethernet connection

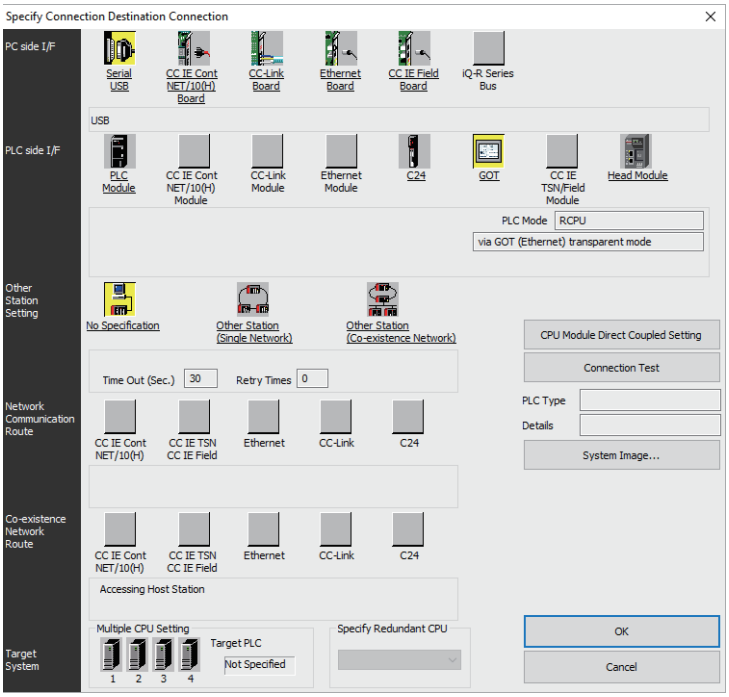

1. Click [Online] → [Current Connection Destination] on CW Configurator.

Displays the [Specify Connection Destination] dialog.

2. Set [Specify Connection Destination].

- PC side I/F: Serial USB
- PLC side I/F: GOT
- Other Station Setting: No Specification

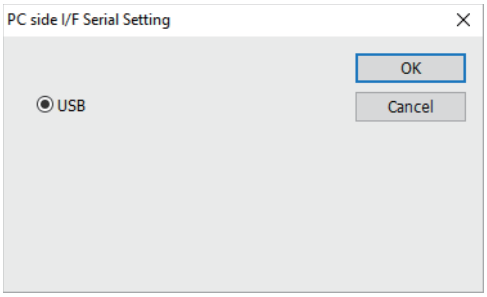

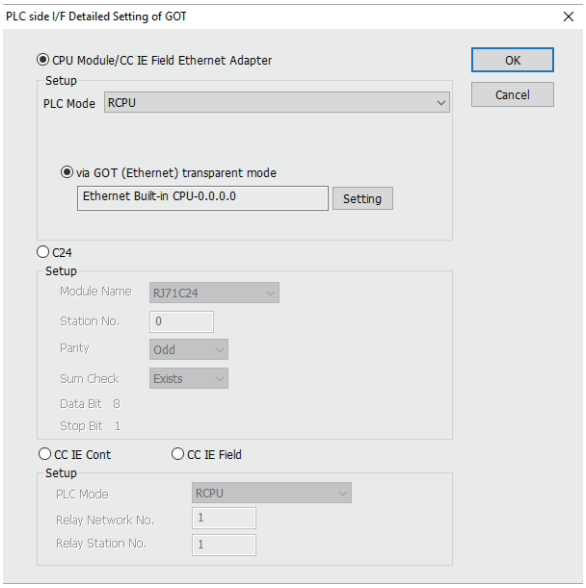

3. Double-click [GOT] of the PLC side I/F to display [PLC side I/F Detailed Setting of GOT].

4. On the [PLC side I/F Detailed Setting of GOT], mark the [via GOT(Ethernet) transparent mode] checkbox and click [Setting...].

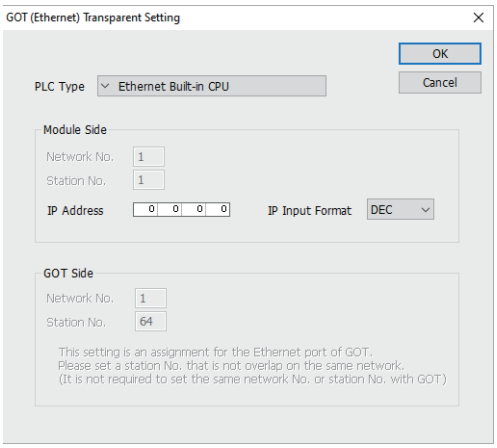

5. By clicking [Set], the [GOT (Ethernet) Transparent Setting] is displayed.

Here, set the built-in Ethernet port CPU, which is firstly connected via a GOT.

6. Set [Ethernet Built-in CPU] for [PLC Type].

7. For [IP address], specify the IP address that is set for the Built-in Ethernet port CPU.

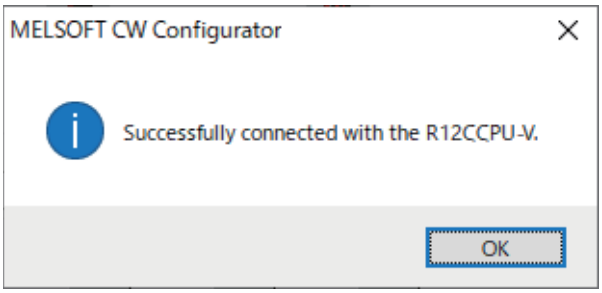

8. The screen returns to the [Connection Channel Setup].

Click [Connection Test] to check if CW Configurator has been connected to the R12CCPU-V.

■Connecting the GOT and PLC in serial communication connection (when connecting to RJ71C24)

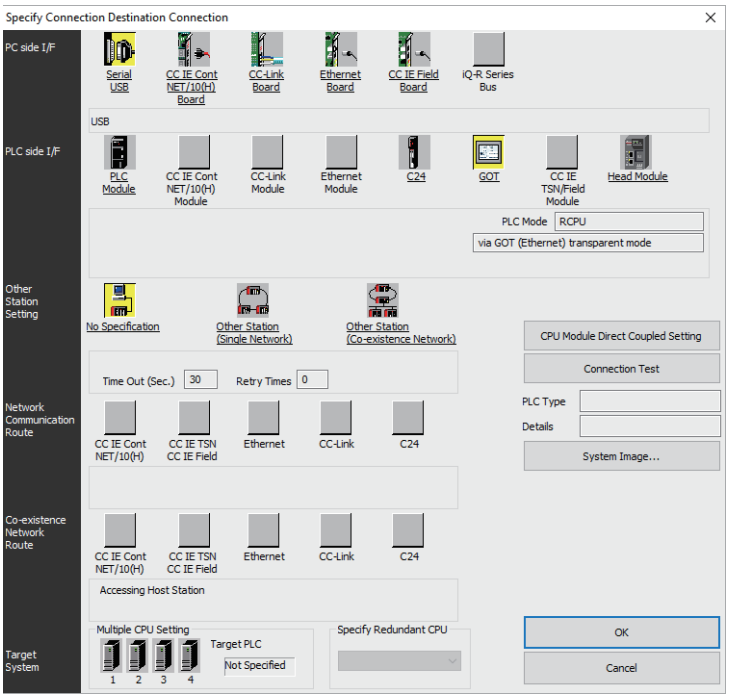

1. Click [Online] → [Current Connection Destination] on CW Configurator.

Displays the [Specify Connection Destination] dialog.

2. Set [Specify Connection Destination].

- PC side I/F: Serial USB
- PLC side I/F: GOT
- Other Station Setting: No Specification

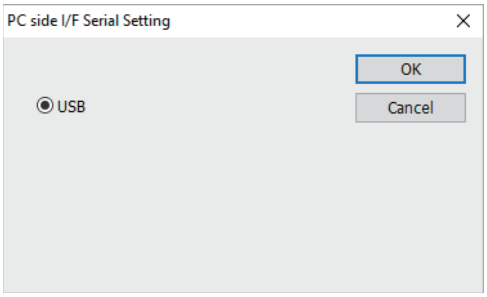

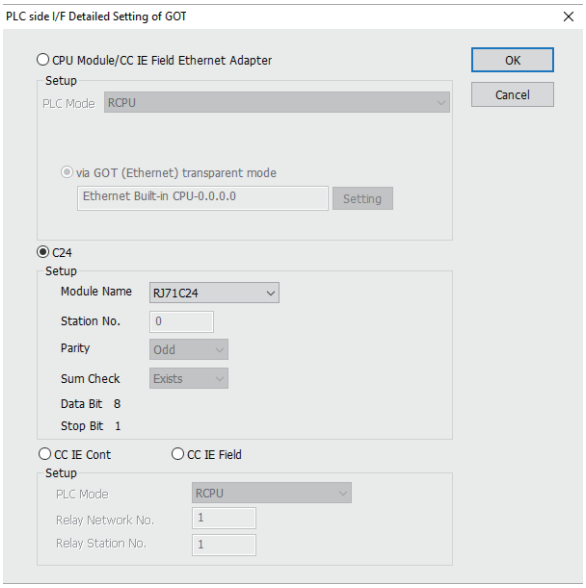

3. Double-click [GOT] of the PLC side I/F to display [PLC side I/F Detailed Setting of GOT].

4. Check-mark [C24] in [PLC side I/F Detailed Setting of GOT].

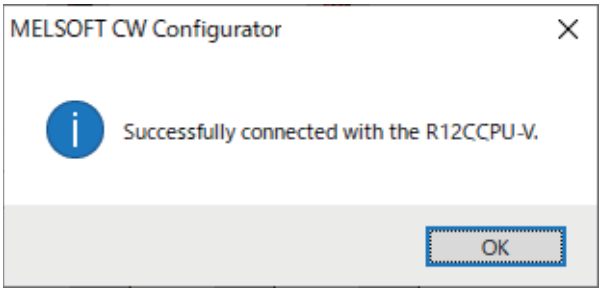

5. The screen returns to the [Connection Channel Setup].

Click [Connection Test] to check if CW Configurator has been connected to the R12CCPU-V.

■Connecting the GOT and PLC in CC-Link IE controller network connection

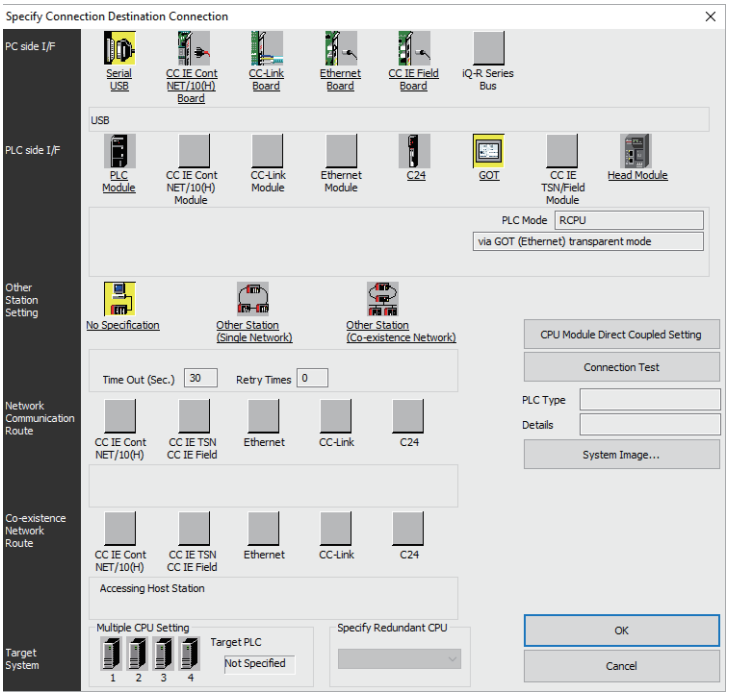

1. Click [Online] → [Current Connection Destination] on CW Configurator.

Displays the [Specify Connection Destination] dialog.

2. Set [Specify Connection Destination].

- PC side I/F: Serial USB
- PLC side I/F: GOT
- Other Station Setting: No Specification

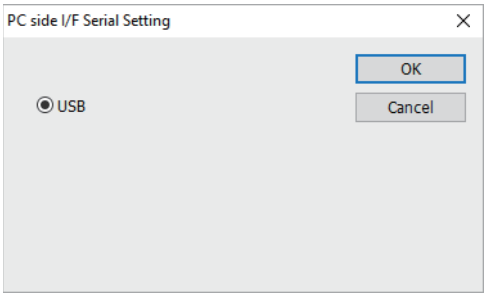

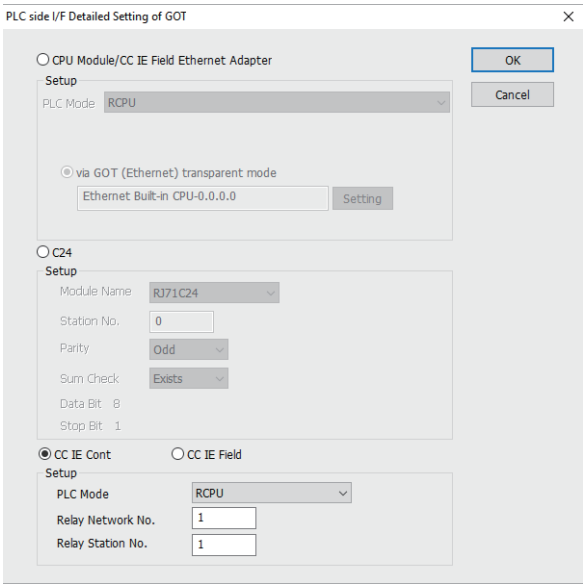

3. Double-click [GOT] of the PLC side I/F to display [PLC side I/F Detailed Setting of GOT].

4. Select [CC IE Cont] in [PLC side I/F Detailed Setting of GOT].

5. Set [Setup].

Set [Relay Station No.] as follows:

- When the target PLC has the same network No. as that of the GOT

Set the number assigned to the PLC that is targeted by using the transparent function and CC-Link IE controller network module.

- When the target PLC has a different network No. from that of the GOT

Set the number assigned the PLC that is used as a relay station and CC-Link IE controller network module.

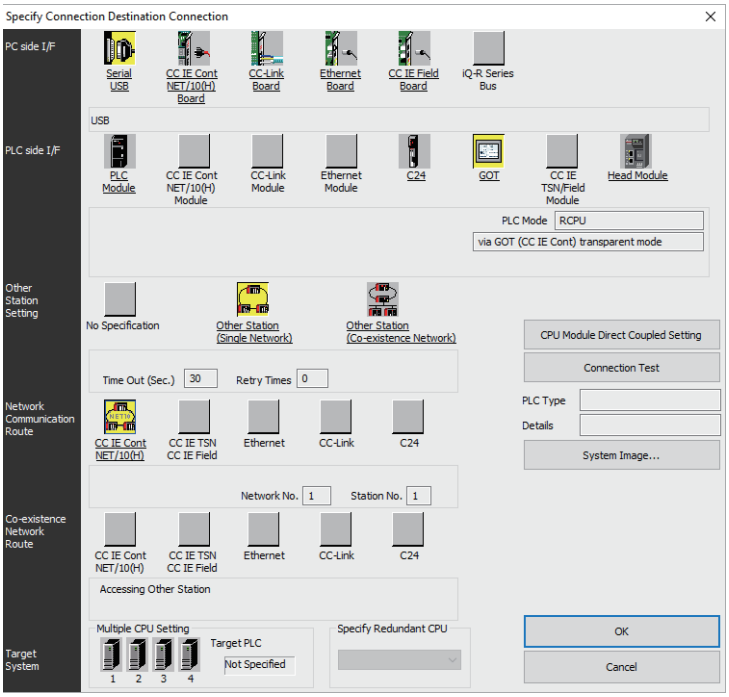

6. Return to [Specify Connection Destination], click [Other Station (Single Network)], and double-click [CC IE Cont NET/10(H)].

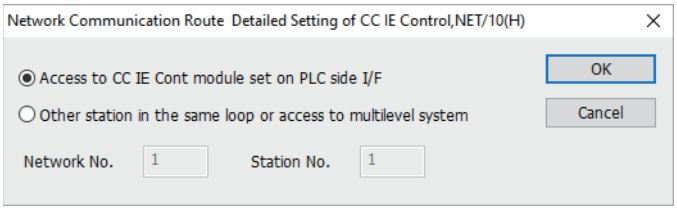

7. Set as shown below and click [OK].

- When the GOT and PLC are on the same network

Select [Access to CC IE Cont module set on PLC side I/F].

- When the GOT and PLC are on the different networks

Select [Other station in the same loop or access to multilevel system] and set [Network No.] and [Station No.].

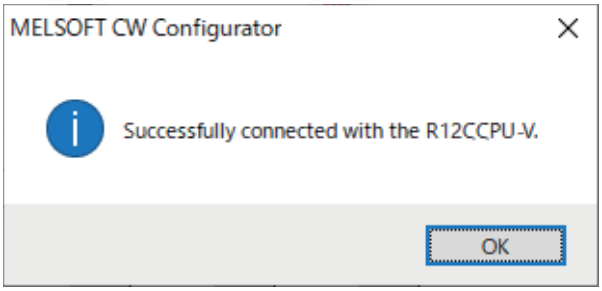

8. The screen returns to the [Connection Channel Setup].

Click [Connection Test] to check if CW Configurator has been connected to the R12CCPU-V.

■Connecting the GOT and PLC in CC-Link IE field network connection

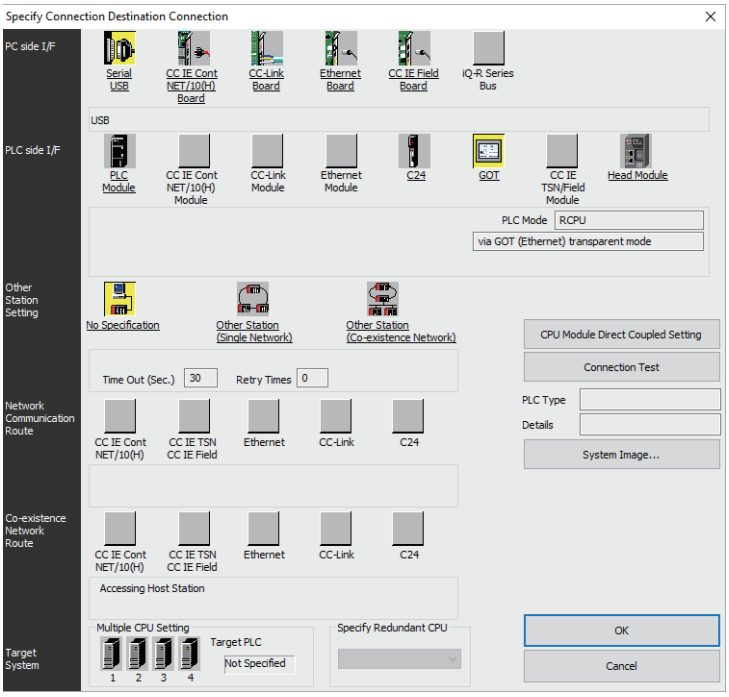

1. Click [Online] → [Current Connection Destination] on CW Configurator.

Displays the [Specify Connection Destination] dialog.

2. Set [Specify Connection Destination].

- PC side I/F: Serial USB
- PLC side I/F: GOT
- Other Station Setting: No Specification

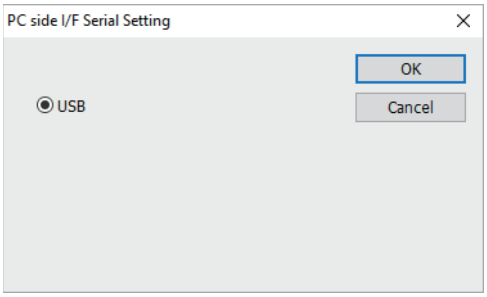

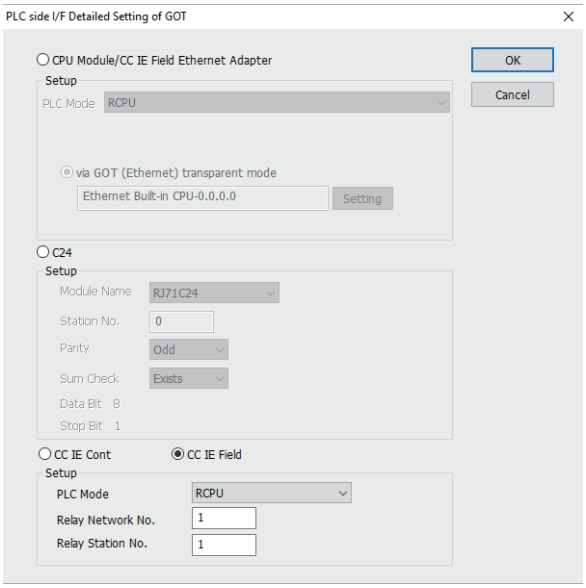

3. Double-click [GOT] of the PLC side I/F to display [PLC side I/F Detailed Setting of GOT].

4. Select [CC IE Field] in [PLC side I/F Detailed Setting of GOT].

5. Set [Setup].

Set [Relay Station No.] as follows:

- When the target PLC has the same network No. as that of the GOT

Set the number assigned to the PLC that is targeted by using the transparent function and CC-Link IE field network module.

- When the target PLC has a different network No. from that of the GOT

Set the number assigned the PLC that is used as a relay station and CC-Link IE field network module.

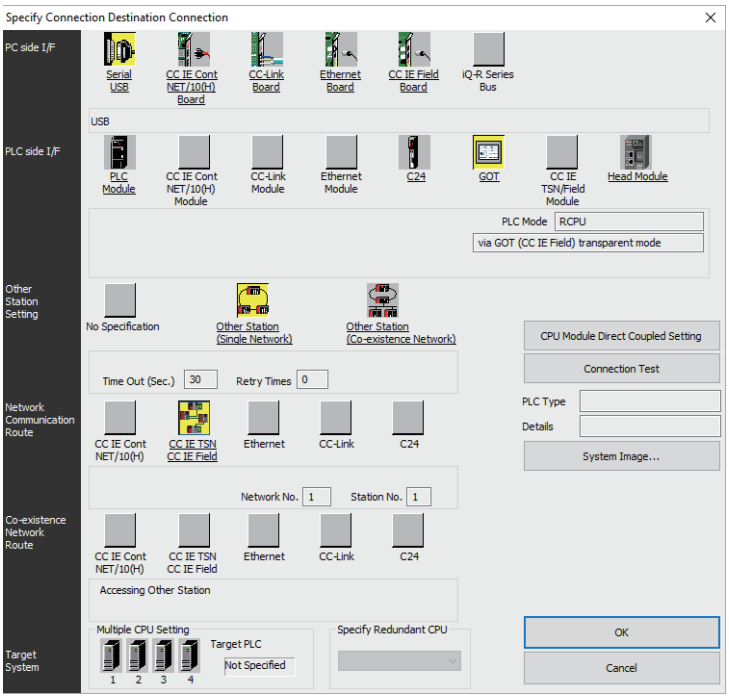

6. Return [Specify Connection Destination], click [Other Station (Single Network)], and double-click [CC IE TSN CC IE Field].

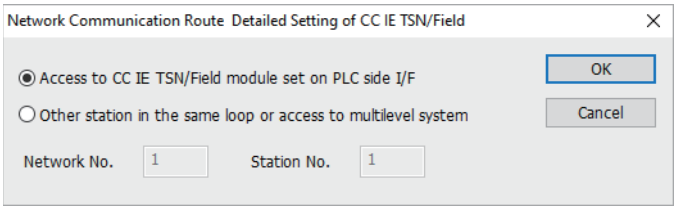

7. Set as shown below and click [OK].

- When the GOT and PLC are on the same network

Select [Access to CC IE TSN/Field module set on PLC side I/F].

- When the GOT and PLC are on the different networks

Select [Other station in the same loop or access to multilevel system] and set [Network No.] and [Station No.].

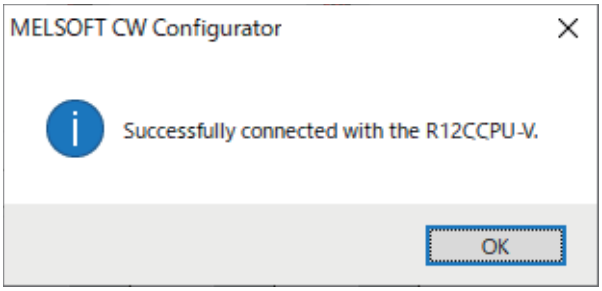

8. The screen returns to the [Connection Channel Setup].

Click [Connection Test] to check if CW Configurator has been connected to the R12CCPU-V.

When connecting the GOT and the personal computer by Ethernet

■Connecting the GOT and PLC in serial communication connection (when connecting to RJ71C24)

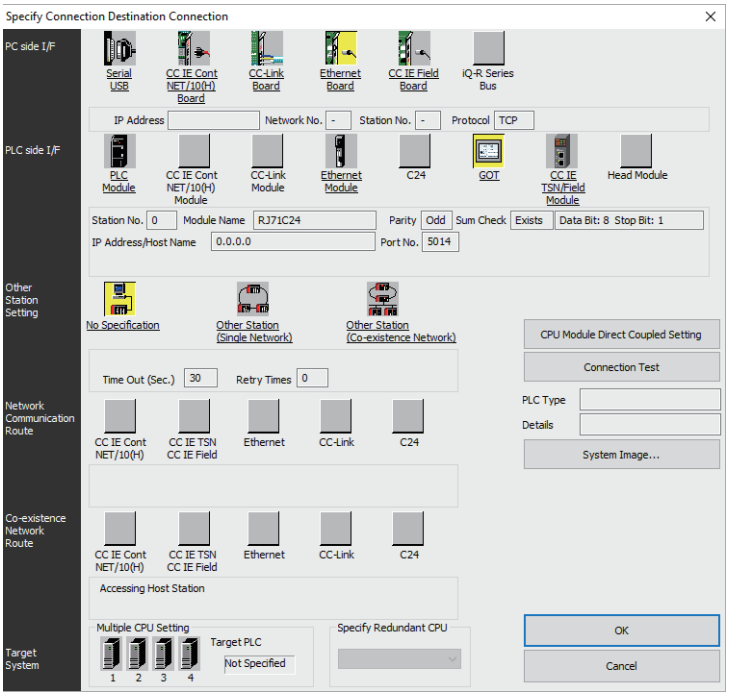

1. Click [Online] → [Current Connection Destination] on CW Configurator.

Displays the [Specify Connection Destination] dialog.

2. Set [Specify Connection Destination].

- PC side I/F: Ethernet Board
- PLC side I/F: GOT
- Other Station Setting: No Specification

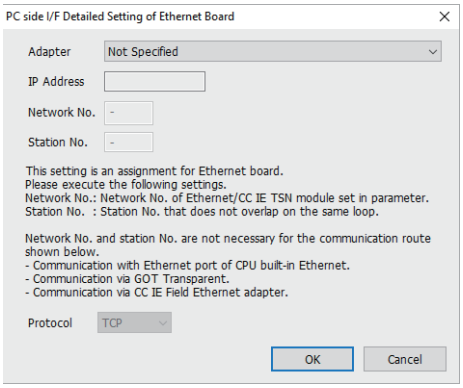

3. Double-click [Ethernet Board] of the PC side I/F to display [PC side I/F Ethernet Board Setting].

4. Select [Adapter] in [PC side I/F Detailed Setting of Ethernet Board].

The network number and the station number are not used. The default settings need not be changed.

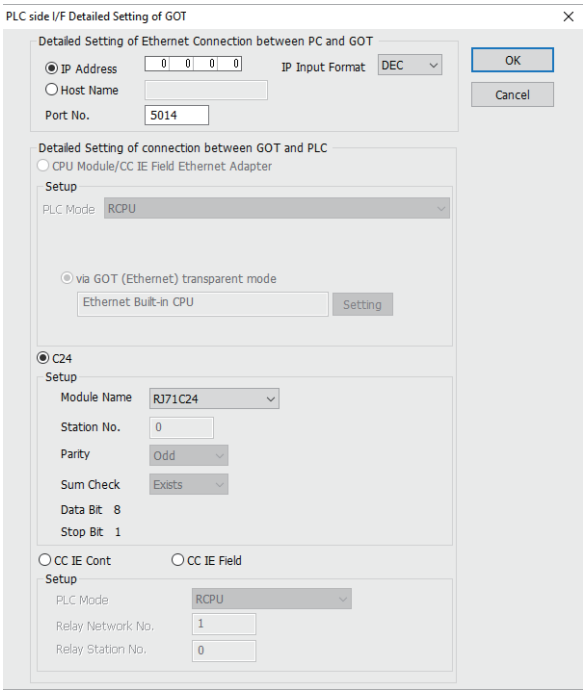

5. Double-click [GOT] of the PLC side I/F to display [PLC side I/F Detailed Setting of GOT].

6. Set the IP address and port No. in [Ethernet detail setting for PC and GOT connection].

Check the IP address and port number on the GOT side in the [GOT Ethernet Setting] window in GT Designer3.

For the details, refer to the following.

GT Designer3 (GOT2000) Screen Design Manual

7. Check-mark [C24] in [Detail setting for GOT and PLC connection].

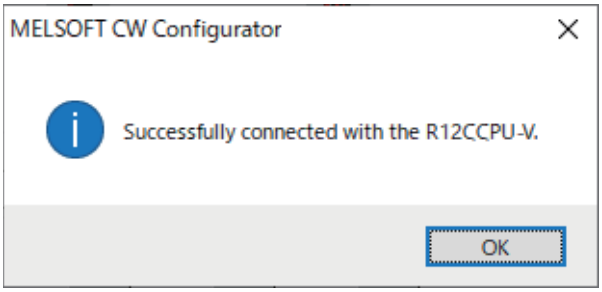

8. The screen returns to the [Connection Channel Setup].

Click [Connection Test] to check if CW Configurator has been connected to the R12CCPU-V.

■Connecting the GOT and PLC in CC-Link IE controller network connection

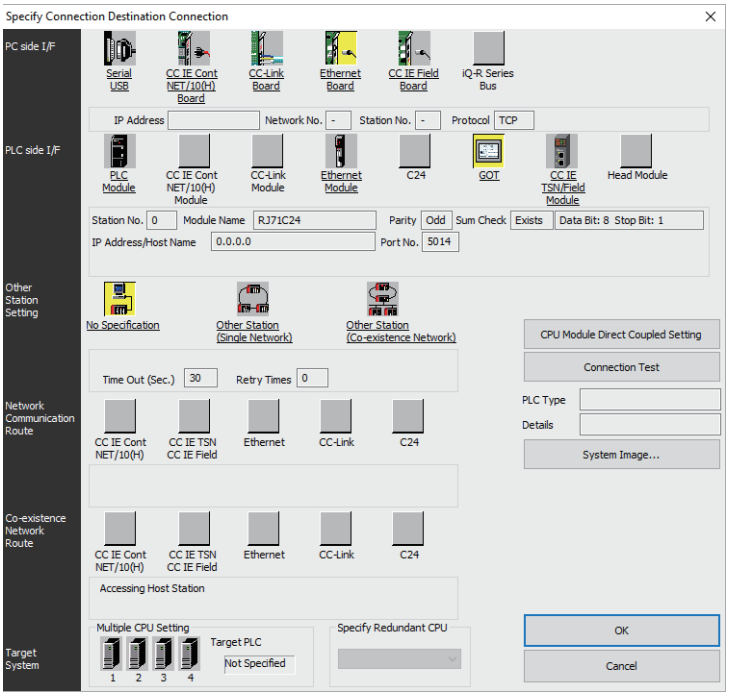

1. Click [Online] → [Current Connection Destination] on CW Configurator.

Displays the [Specify Connection Destination] dialog.

2. Set [Specify Connection Destination].

- PC side I/F: Ethernet Board
- PLC side I/F: GOT
- Other Station Setting: No Specification

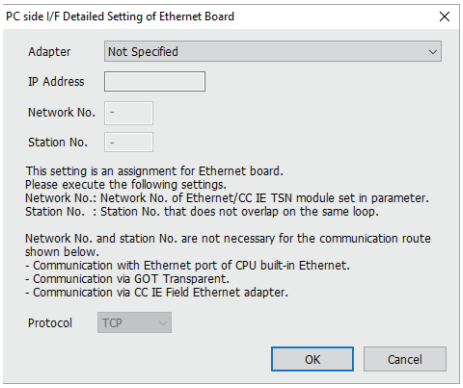

3. Double-click [Ethernet Board] of the PC side I/F to display [PC side I/F Ethernet Board Setting].

4. Select [Adapter] in [PC side I/F Detailed Setting of Ethernet Board].

The network number and the station number are not used. The default settings need not be changed.

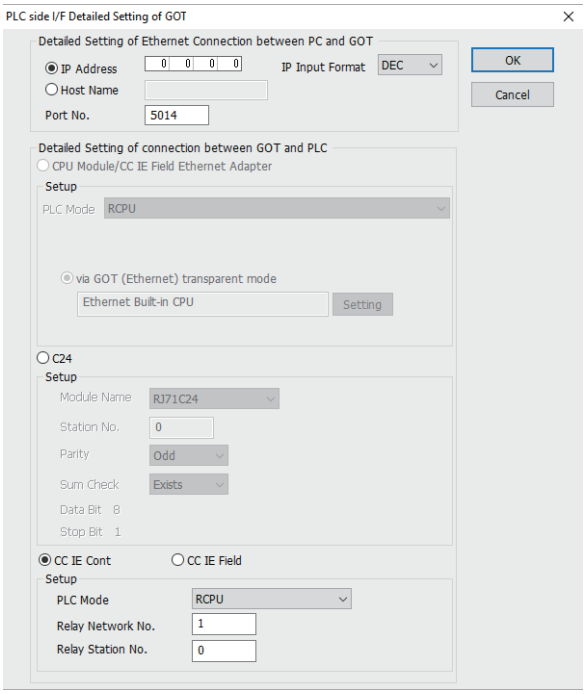

5. Double-click [GOT] of the PLC side I/F to display [PLC side I/F Detailed Setting of GOT].

6. Set the IP address and port No. in [Ethernet detail setting for PC and GOT connection].

Check the IP address and port number on the GOT side in the [GOT Ethernet Setting] window in GT Designer3.

For the details, refer to the following.

GT Designer3 (GOT2000) Screen Design Manual

7. Check-mark [CC IE Cont] in [Detail setting for GOT and PLC connection].

8. Set [Setup].

Set [Relay Station No.] as follows:

- When the target PLC has the same network No. as that of the GOT

Set the number assigned to the PLC that is targeted by using the transparent function and CC-Link IE controller network module.

- When the target PLC has a different network No. from that of the GOT

Set the number assigned the PLC that is used as a relay station and CC-Link IE controller network module.

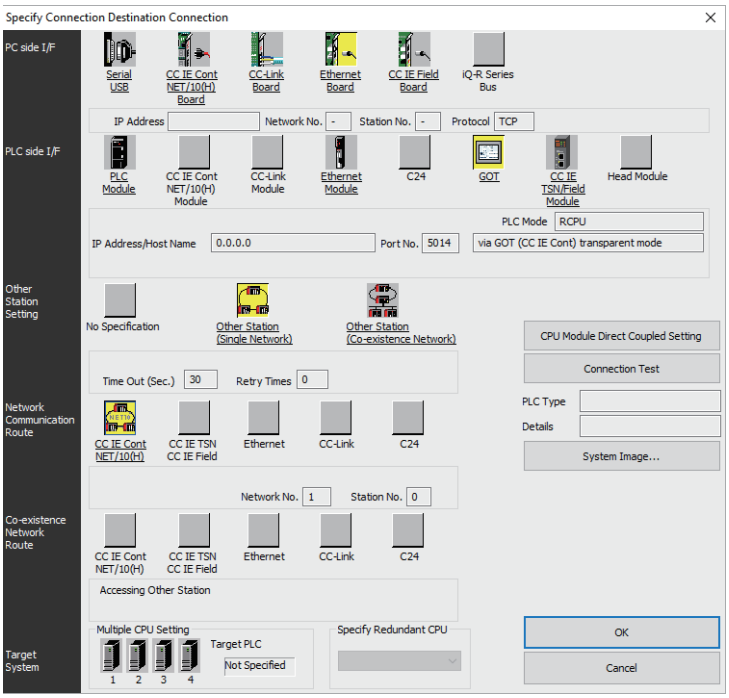

9. Return [Specify Connection Destination], click [Other Station (Single Network)], and double-click [CC IE Cont NET/10(H)].

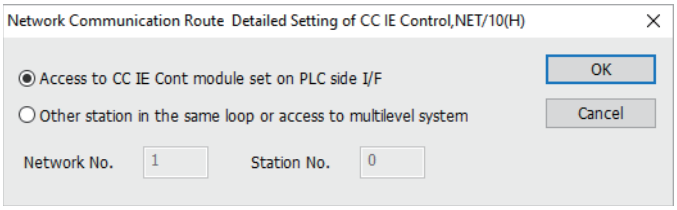

10. Set as shown below and click [OK].

- When the GOT and PLC are on the same network

Select [Access to CC IE Cont module set on PLC side I/F].

- When the GOT and PLC are on the different networks

Select [Other station in the same loop or access to multilevel system] and set [Network No.] and [Station No.].

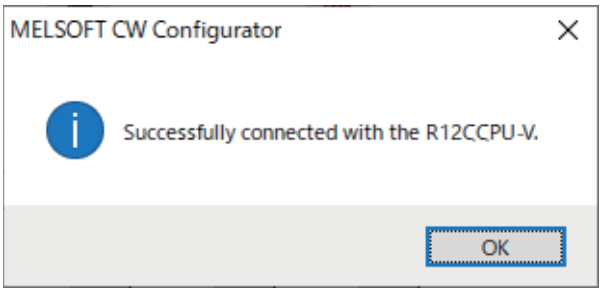

11. The screen returns to the [Connection Channel Setup].

Click [Connection Test] to check if CW Configurator has been connected to the R12CCPU-V.

■Connecting the GOT and PLC in CC-Link IE field network connection

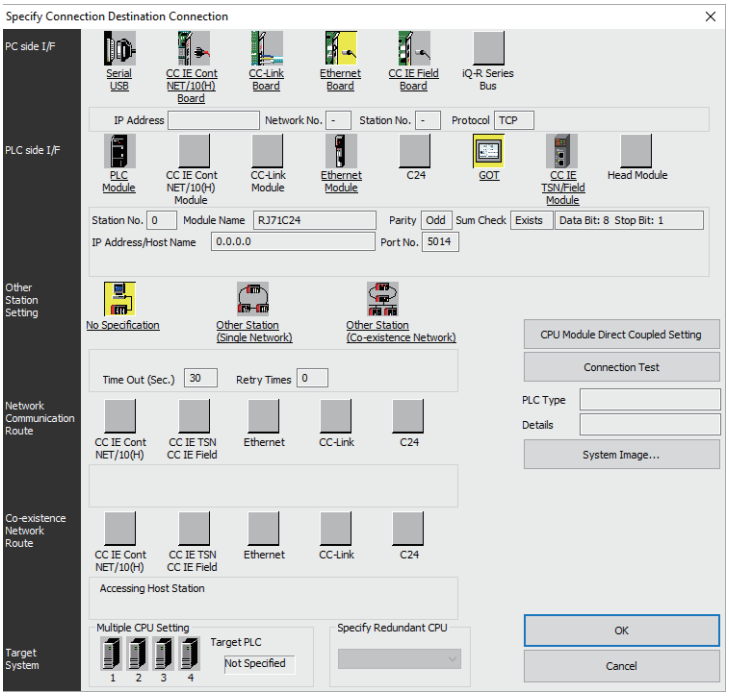

1. Click [Online] → [Current Connection Destination] on CW Configurator.

Displays the [Specify Connection Destination] dialog.

2. Set [Specify Connection Destination].

- PC side I/F: Ethernet Board
- PLC side I/F: GOT
- Other Station Setting: No Specification

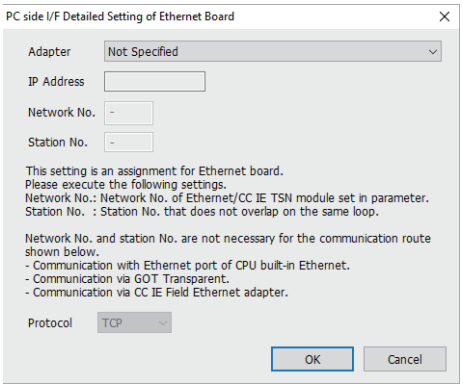

3. Double-click [Ethernet Board] of the PC side I/F to display [PC side I/F Ethernet Board Setting].

4. 4. Select [Adapter] in [PC side I/F Detailed Setting of Ethernet Board].

The network number and the station number are not used. The default settings need not be changed.

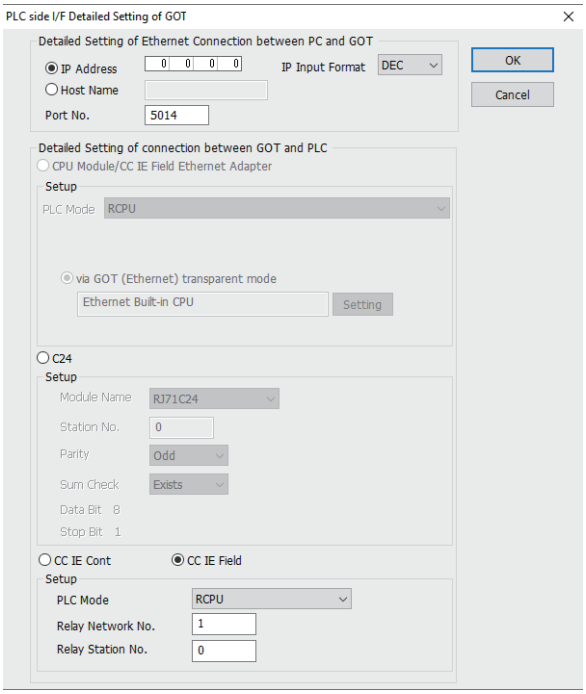

5. Double-click [GOT] of the PLC side I/F to display [PLC side I/F Detailed Setting of GOT].

6. Set the IP address and port No. in [Ethernet detail setting for PC and GOT connection].

Check the IP address and port number on the GOT side in the [GOT Ethernet Setting] window in GT Designer3.

For the details, refer to the following.

GT Designer3 (GOT2000) Screen Design Manual

7. Check-mark [CC IE Field] in [Detail setting for GOT and PLC connection].

8. Set [Setup].

Set [Relay Station No.] as follows:

- When the target PLC has the same network No. as that of the GOT

Set the number assigned to the PLC that is targeted by using the transparent function and CC-Link IE field network module.

- When the target PLC has a different network No. from that of the GOT

Set the number assigned the PLC that is used as a relay station and CC-Link IE field network module.

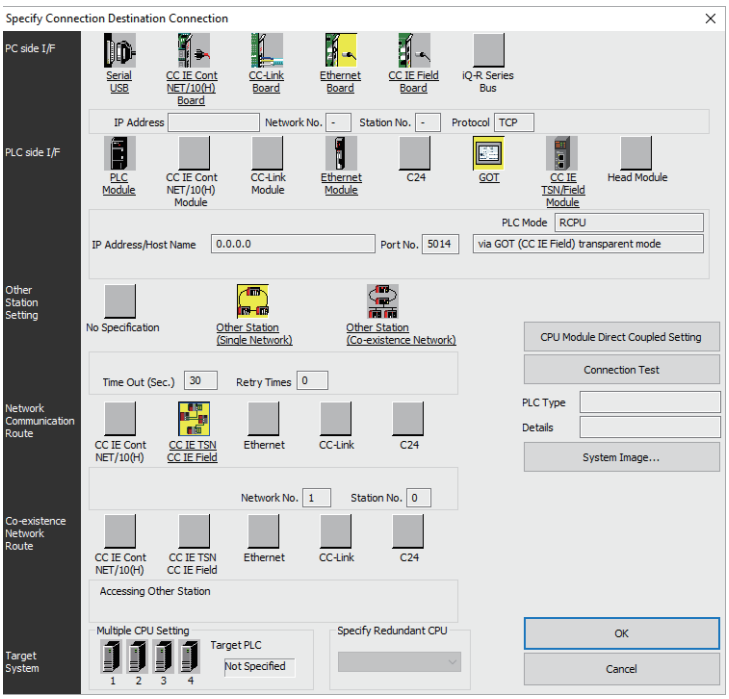

9. Return to [Specify Connection Destination], click [Other Station (Single Network)], and double-click [CC IE TSN CC IE Field].

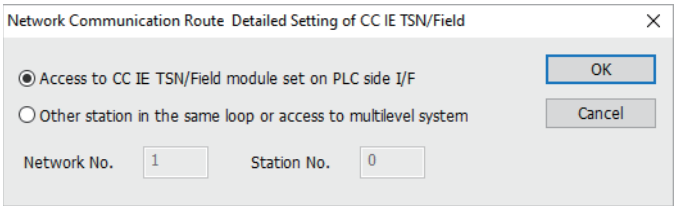

10. Set as shown below and click [OK].

- When the GOT and PLC are on the same network

Select [Access to CC IE TSN/Field module set on PLC side I/F].

- When the GOT and PLC are on the different networks

Select [Other station in the same loop or access to multilevel system] and set [Network No.] and [Station No.].

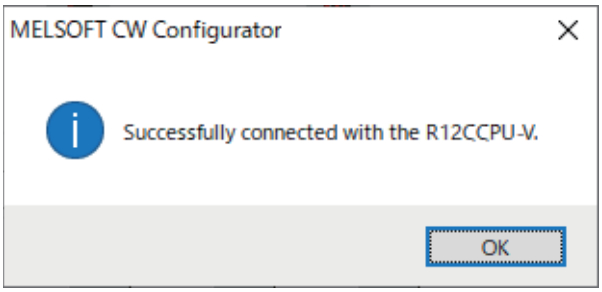

11. The screen returns to the [Connection Channel Setup].

Click [Connection Test] to check if CW Configurator has been connected to the R12CCPU-V.

Accessing the PLC by the PX Developer, GX Configurator

The setting method for the FA transparent function of PX Developer is used as an example.

Connecting the GOT and PLC in bus connection or direct CPU connection (serial) (when connecting to QCPU (Q mode))

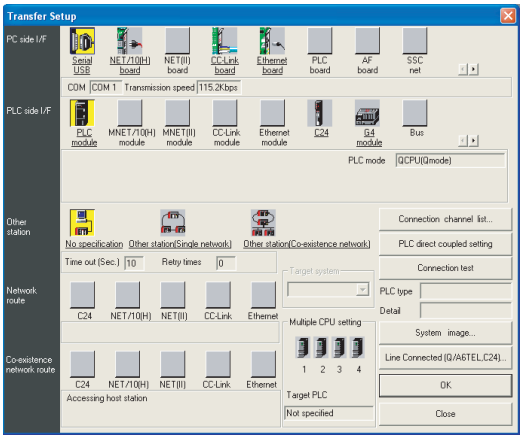

1. Click [Online] → [Transfer Setup] in PX Developer.

2. The [Transfer Setup] is displayed.

3. Set the [Transfer Setup]:

PC side I/F: Serial USB (COM)

PLC side I/F: PLC module

Other station: No specification

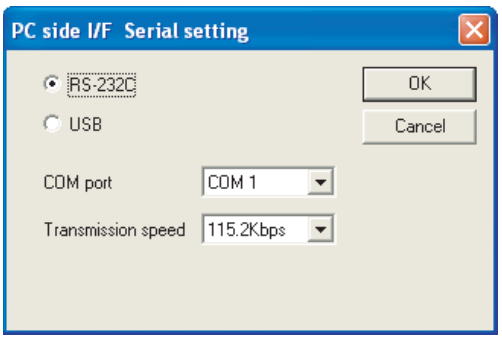

4. Double-click [Serial] of the PC side I/F to display [PC side I/F Serial setting].

5. Select [USB] in the [PC side I/F Serial Setting] dialog.

(For bus connection)

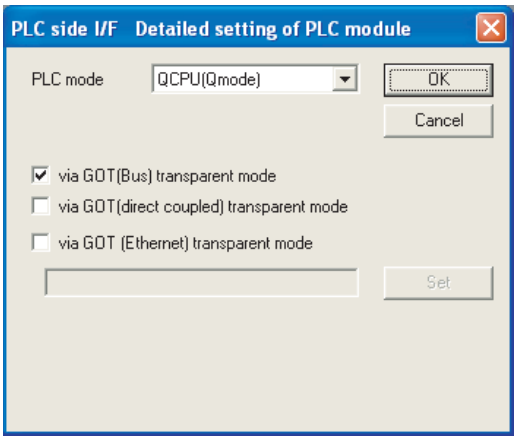

6. Double-click [PLC module] of the PLC side I/F to display [PLC side I/F Detailed setting of PLC module].

7. Check-mark either of the following in [PLC side I/F Detailed setting of PLC module].

Bus connection

[via GOT(Bus) transparent mode]

Direct CPU connection (serial)

[via GOT (direct coupled) transparent mode]

8. The screen returns to [Transfer Setup]. Click [Connection Test] to check if PX Developer has been connected to the QCPU (Q mode).

Connecting the GOT and PLC in serial communication connection (when connected to the QJ71C24(N)) (GX Configurator is not supported.)

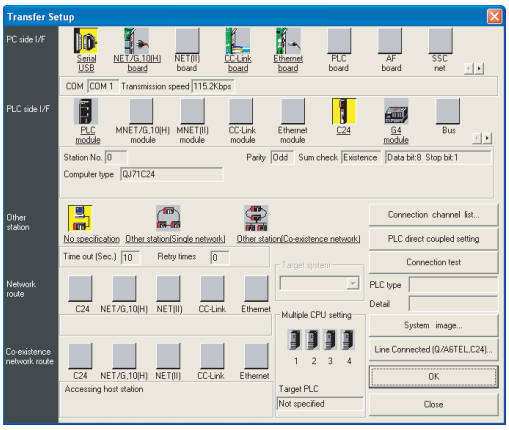

1. Click [Online] → [Transfer Setup] in PX Developer.

2. The [Transfer Setup] is displayed.

3. Set the [Transfer Setup]:

PC side I/F: Serial

PLC side I/F: C24

Other station: No specification

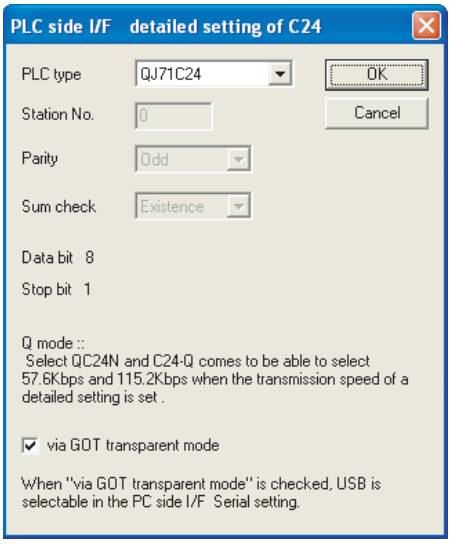

4. Return to [Transfer Setup] and double-click [C24] of the PLC side I/F to display [PLC side I/F detailed setting of C24].

5. Check [via GOT transparent mode] for [PLC side I/F detailed setting of C24].

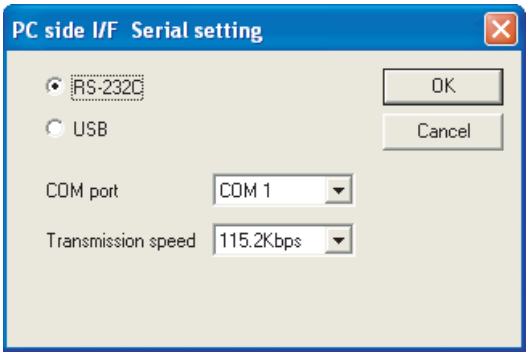

6. Double-click [Serial] of the PC side I/F to display [PC side I/F Serial setting].

7. Select [USB] in the [PC side I/F Serial Setting] dialog.

8. The screen returns to [Transfer Setup]. Click [Connection Test] to check if PX Developer has been connected to the QCPU (Q mode).

When connecting the GOT and PLC in Ethernet communication (when connecting to QCPU (Q mode))

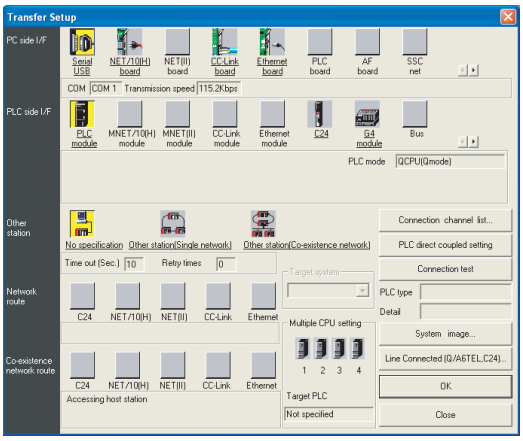

1. Click [Online] → [Transfer Setup] in PX Developer.

2. The [Transfer Setup] is displayed.

3. Set the [Transfer Setup]:

PC side I/F: Serial USB (COM)

PLC side I/F: PLC module

Other station: No specification

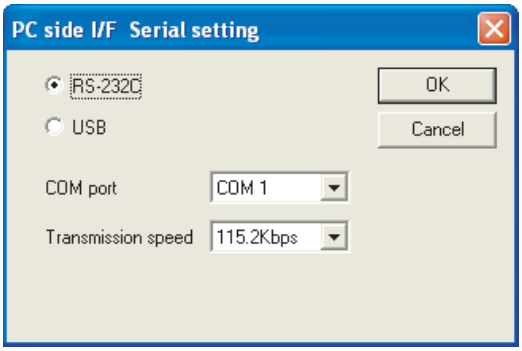

4. Double-click [Serial] of the PC side I/F to display [PC side I/F Serial setting].

5. Select [USB] in the [PC side I/F Serial Setting] dialog.

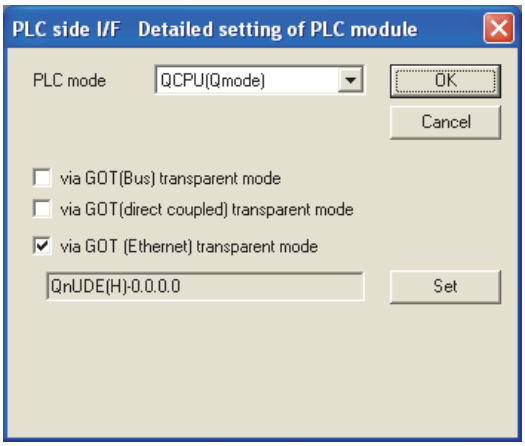

6. Double-click [PLC module] of the PLC side I/F to display [PLC side I/F Detailed setting of PLC module].

7. On the [PLC side I/F Detailed setting of PLC module], mark the [via GOT(Ethernet) transparent mode] checkbox and click [Set].

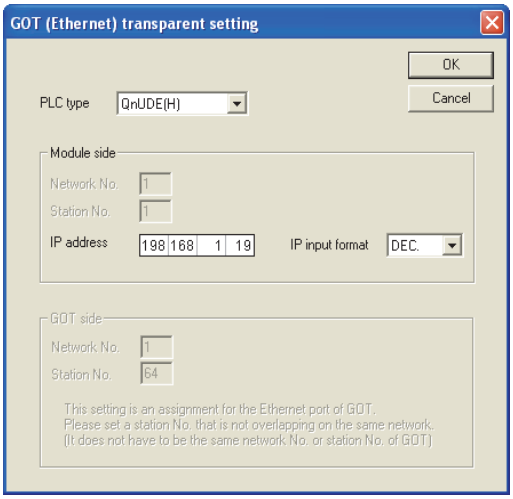

8. By clicking [Set], the [GOT (Ethernet) transparent setting] is displayed.

Here, set the built-in Ethernet port QCPU or Ethernet module, which is firstly connected via a GOT.

9. Set [QnUDE(H)] or [QJ71E71] for [Type name].

When connecting the Q173NCCPU, set [QJ71E71].

10. Specify the number for [Network No.] and [Station No.] same as the number assigned to the Ethernet module.

When [QnUDE(H)] is set for [Type name], the setting is not required.

11. Specify the IP address for [IP address] same as the IP address assigned to the built-in Ethernet port QCPU or Ethernet module.

12. The screen returns to [Transfer Setup]. Click [Connection Test] to check if PX Developer has been connected to the QCPU (Q mode).

Connecting the GOT and PLC in direct CPU connection (serial) (when connecting to FXCPU)

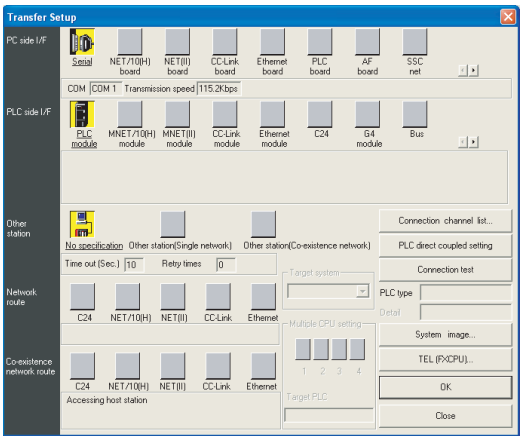

1. Click [Online] → [Transfer Setup] in PX Developer.

2. The [Transfer Setup] is displayed.

3. Set the [Transfer Setup]:

PC side I/F: Serial

PLC side I/F: PLC module

Other station: No specification

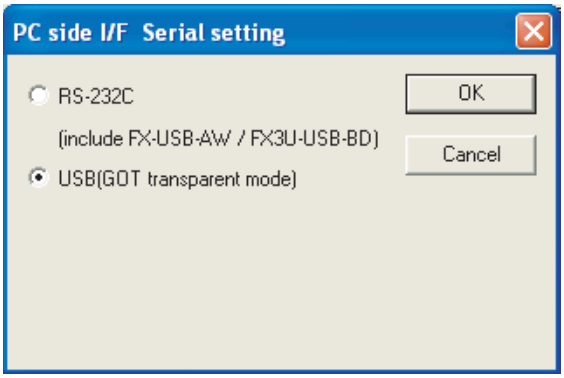

4. Double-click [Serial] of the PC side I/F to display [PC side I/F Serial setting].

5. Select [USB (GOT transparent mode)] in the [PC side I/F Serial Setting] dialog.

6. The screen returns to the [Transfer Setup]. Click the [Connection Test] to check if PX Developer has been connected to the FXCPU.

Point

How to operate PX Developer

For the PX Developer operation method, refer to the following manual.

📖PX Developer Version 1 Operating Manual (Programming Tool)

Accessing by GX Works2

The following shows the procedure to set the FA transparent function of GX Works2.

When connecting the GOT and the personal computer by USB

■Connecting the GOT and PLC in bus connection or direct CPU connection (serial) (when connecting to QCPU (Q mode))

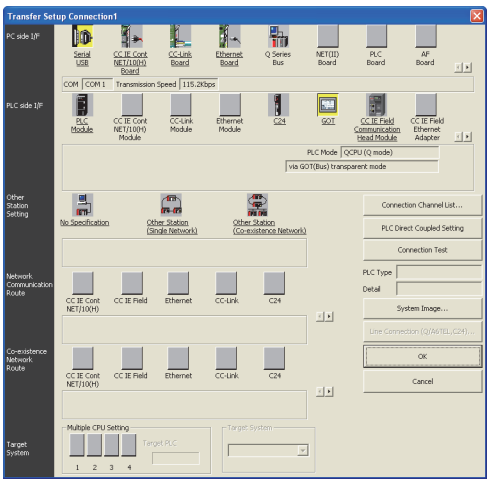

1. Click the Connection Destination view → [Connection Destination] → [(Connection target data name)] in the Navigation window of GX Works2.

2. The [Transfer Setup Connection1] is displayed.

3. Set the [Transfer Setup Connection1]:

PC side I/F: Serial USB

PLC side I/F: GOT

Other Station Setting: No Specification:

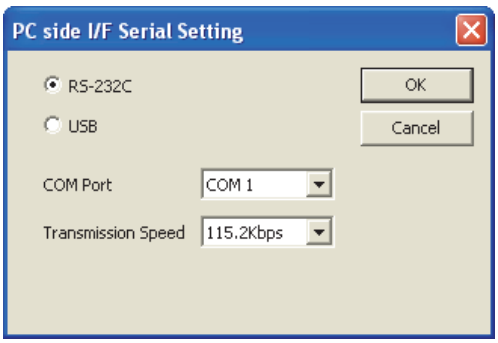

4. Double-click [Serial USB] of the PC side I/F to display [PC side I/F Serial Setting].

5. Select [USB] in the [PC side I/F Serial Setting] dialog.

(For bus connection)

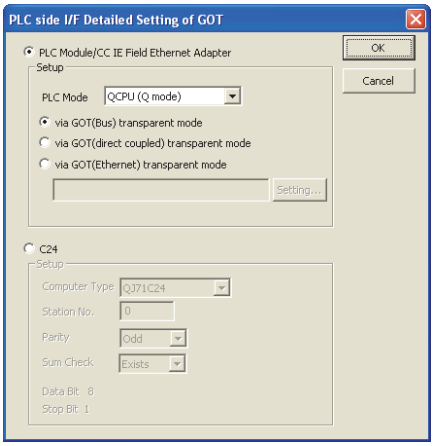

6. Double-click [GOT] of the PLC side I/F to display [PLC side I/F Detailed Setting of GOT].

7. Check-mark either of the following in [PLC side I/F Detailed Setting of GOT].

Bus connection

[via GOT(Bus) transparent mode]

Direct CPU connection (serial)

Mark the [via GOT(direct coupled) transparent mode] checkbox.

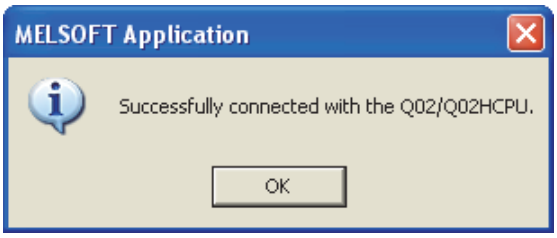

8. The screen returns to [Transfer Setup Connection1]. Click [Connection Test] to check if GX Works2 has been connected to the QCPU (Q mode).

■Connecting the GOT and PLC in serial communication connection (when connecting to QJ71C24 (N))

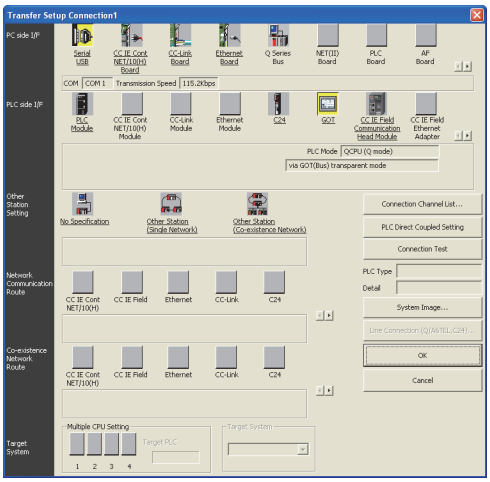

1. Click the Connection Destination view → [Connection Destination] → [(Connection target data name)] in the Navigation window of GX Works2.

2. The [Transfer Setup Connection1] is displayed.

3. Set the [Transfer Setup Connection1]:

PC side I/F: Serial USB

PLC side I/F: GOT

Other Station Setting: No Specification

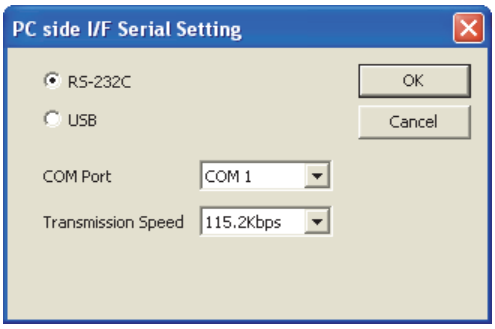

4. Double-click [Serial USB] of the PC side I/F to display [PC side I/F Serial Setting].

5. Select [USB] in the [PC side I/F Serial Setting] dialog.

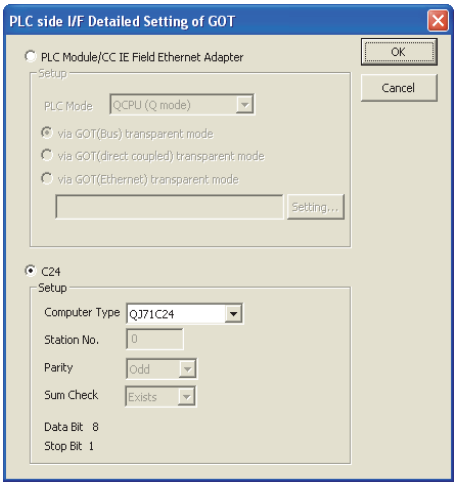

6. Double-click [GOT] of the PLC side I/F to display [PLC side I/F Detailed Setting of GOT].

7. Check-mark [C24] in [PLC side I/F Detailed Setting of GOT].

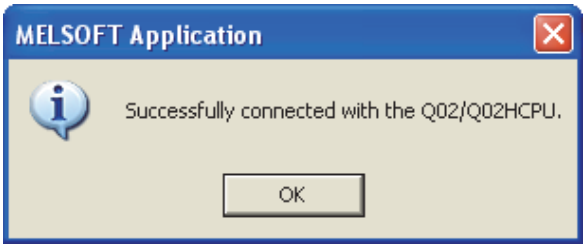

8. The screen returns to [Transfer Setup Connection1]. Click [Connection Test] to check if GX Works2 has been connected to the QCPU (Q mode).

■Connecting the GOT and PLC in Ethernet connection

- Connecting to QCPU (Q mode)

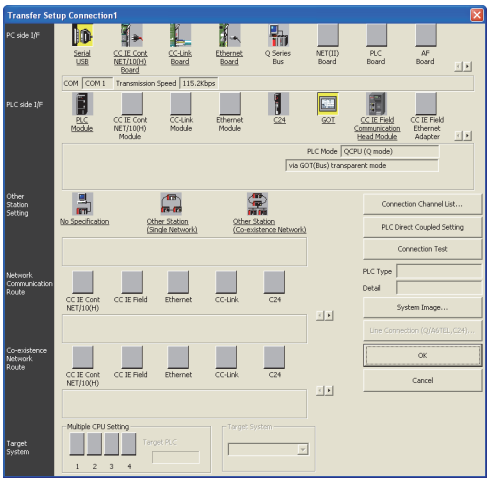

1. Click the Connection Destination view → [Connection Destination] → [(Connection target data name)] in the Navigation window of GX Works2.

2. The [Transfer Setup Connection1] is displayed.

3. Set the [Transfer Setup Connection1]:

PC side I/F: Serial USB

PLC side I/F: GOT

Other Station Setting: No Specification

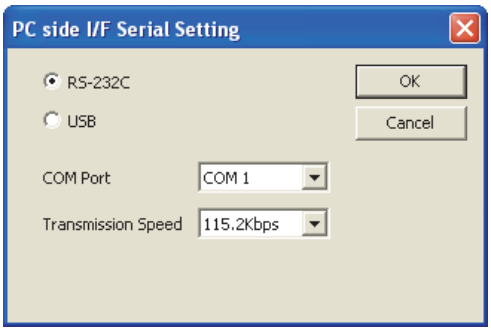

4. Double-click [Serial USB] of the PC side I/F to display [PC side I/F Serial Setting].

5. Select [USB] in the [PC side I/F Serial Setting] dialog.

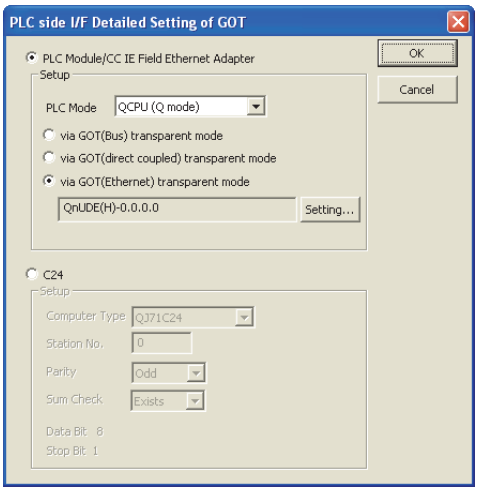

6. Double-click [GOT] of the PLC side I/F to display [PLC side I/F Detailed Setting of GOT].

7. On the [PLC side I/F Detailed Setting of GOT], mark the [via GOT(Ethernet) transparent mode] checkbox and click [Setting...].

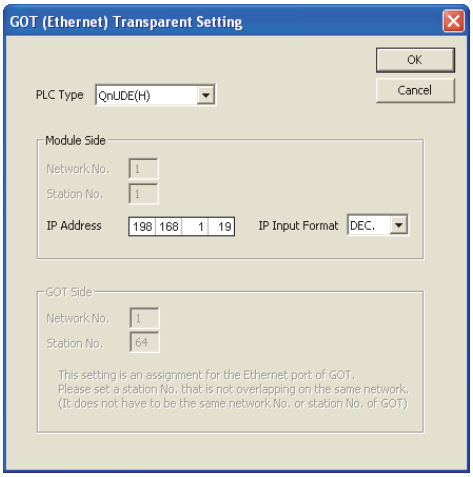

8. By clicking [Set], the [GOT (Ethernet) Transparent Setting] is displayed.

Here, set the built-in Ethernet port QCPU or Ethernet module, which is firstly connected via a GOT.

9. Set [QnUDE(H)] or [QJ71E71] for [PLC Type].

10. Specify the number for [Network No.] and [Station No.] same as the number assigned to the Ethernet module.

When [QnUDE(H)] is set for [PLC type], the setting is not required.

11. Specify the IP address for [IP Address] same as the IP address assigned to the built-in Ethernet port QCPU or Ethernet module.

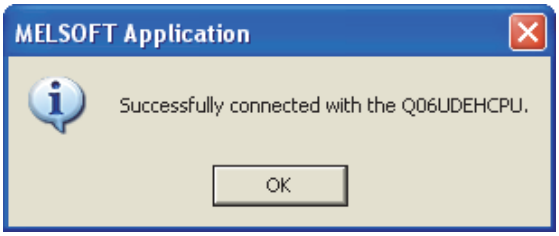

12. The screen returns to [Transfer Setup Connection1]. Click [Connection Test] to check if GX Works2 has been connected to the QCPU (Q mode).

• Connecting to FXCPU

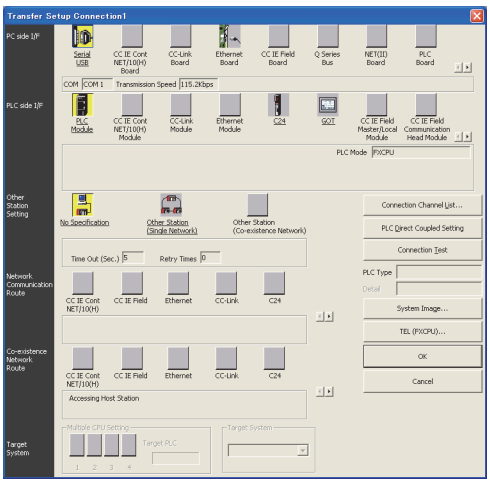

1. Click the Connection Destination view → [Connection Destination] → [(Connection target data name)] in the Navigation window of GX Works2.

2. The [Transfer Setup Connection1] is displayed.

3. Set the [Transfer Setup Connection1]:

PC side I/F: Serial USB

PLC side I/F: GOT

Other Station Setting: No Specification

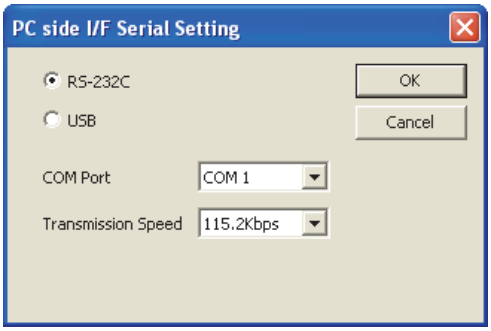

4. Double-click [Serial USB] of the PC side I/F to display [PC side I/F Serial Setting].

5. Select [USB] in the [PC side I/F Serial Setting] dialog.

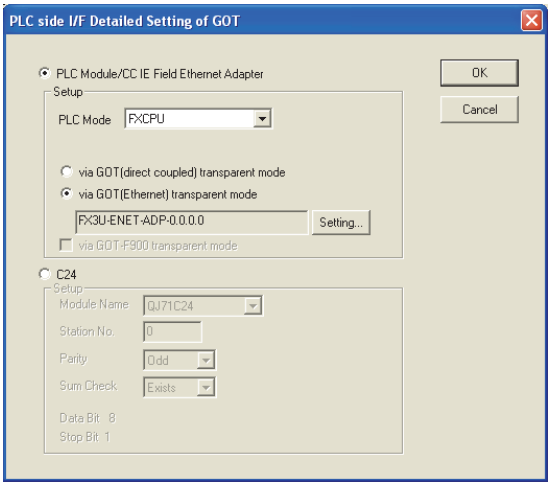

6. Double-click [GOT] of the PLC side I/F to display [PLC side I/F Detailed Setting of GOT].

7. On the [PLC side I/F Detailed Setting of GOT], mark the [via GOT(Ethernet) transparent mode] checkbox and click [Setting...].

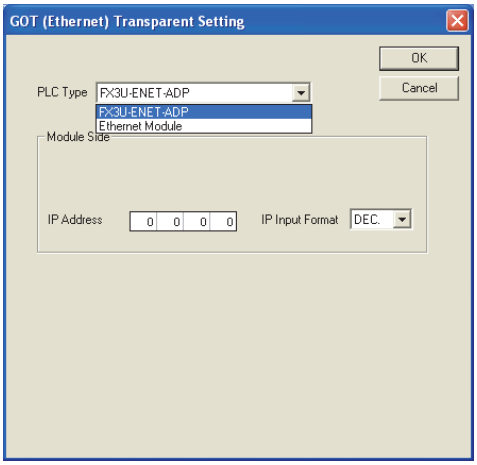

8. By clicking [Set], the [GOT (Ethernet) transparent setting] is displayed.

Here, set the [FX3U-ENET-ADP] or [Ethernet Module], which is connected via a GOT.

9. Set [FX3U-ENET-ADP] or [Ethernet Module] for [PLC Type].

10. Specify the IP address for [IP address] same as the IP address assigned to the [FX3U-ENET-ADP] or [Ethernet Module].

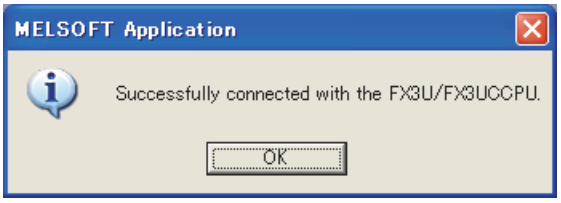

11. The screen returns to [Transfer Setup]. Click [Connection Test] to check if GX Works2 has been connected to the FXCPU.

■Connecting the GOT and Ethernet adapter (NZ2GF-ETB) in Ethernet connection, and connecting it to a PLC in the CC-Link IE Field Network.

This section describes the settings of the GX Works2 in the following case of system configuration.

Point

Version of GX Works2

GX Works2 Version 1.34L or later is required to execute the FA transparent function with using Ethernet adapter (NZ2GF-ETB).

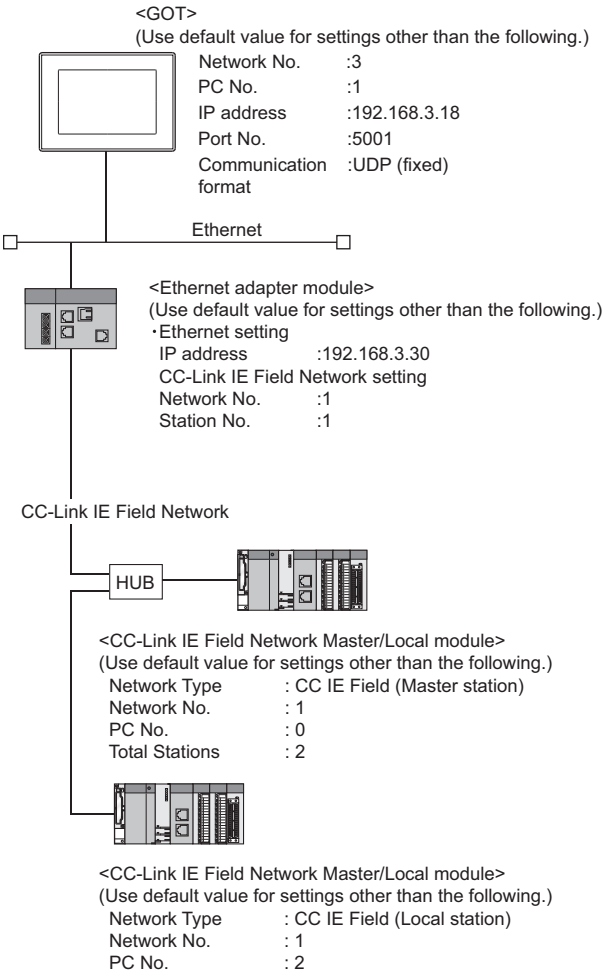

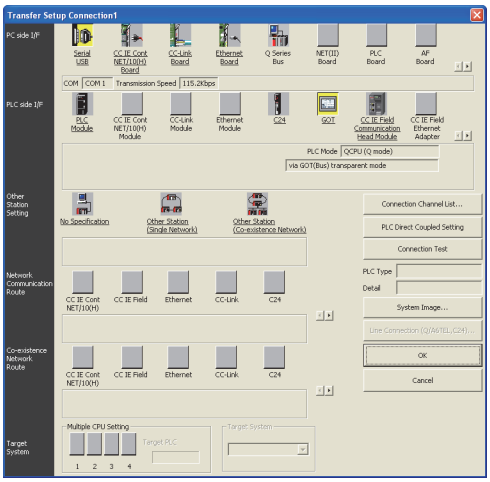

1. Click the Connection Destination view → [Connection Destination] → [(Connection target data name)] in the Navigation window of GX Works2.
2. The [Transfer Setup Connection1] is displayed.

3. Set the [Transfer Setup Connection1].

PC side I/F: Serial USB

PLC side I/F: GOT

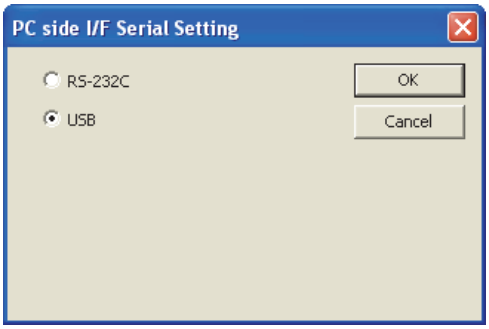

4. Double-click [Serial USB] of the PC side I/F to display [PC side I/F Serial Setting].

5. Select [USB] in the [PC side I/F Serial Setting] dialog.

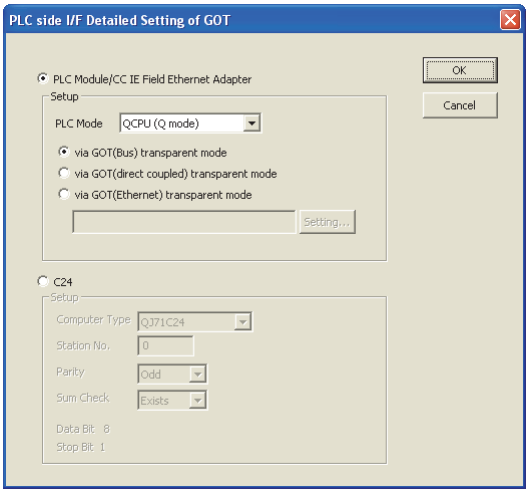

6. Double-click [GOT] of the PLC side I/F to display [PLC side I/F Detailed Setting of GOT].

7. Set the [CPU mode] to [LCPU].

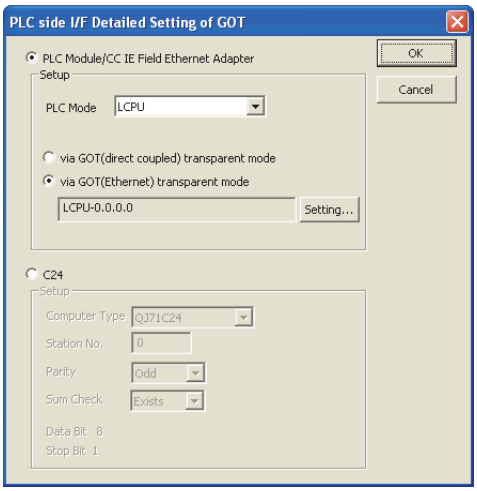

8. On the[PLC side I/F Detailed Setting of GOT], mark the [via GOT(Ethernet) transparent mode] checkbox and click [Setting...].

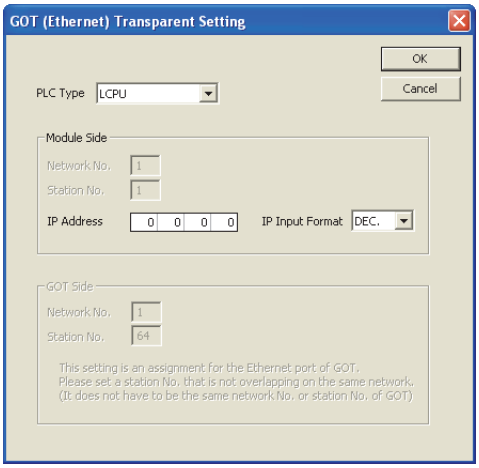

9. [GOT (Ethernet) Transparent Setting] is displayed.

Here, set the Ethernet module, which is firstly connected via a GOT.

10. Set [NZ2GF-ETB] for [PLC Type].

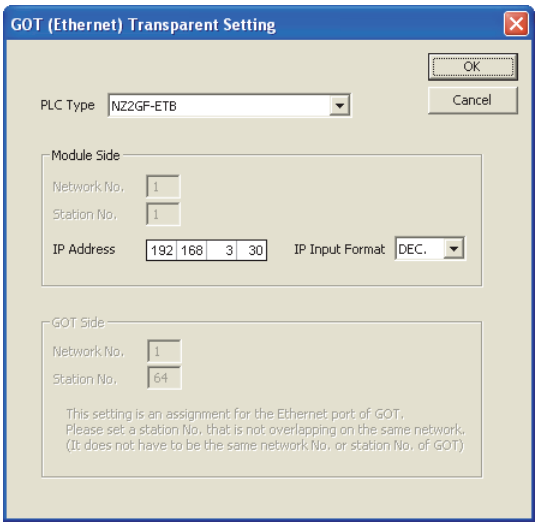

11. Set the same number to [IP address] as the number assigned to NZ2GF-ETB, and click [OK].

In the system configuration example, the setting is as follows.

[IP address]: 192 168 3 30

12. Return to [PLC side I/F Detailed Setting of GOT], and click [OK].

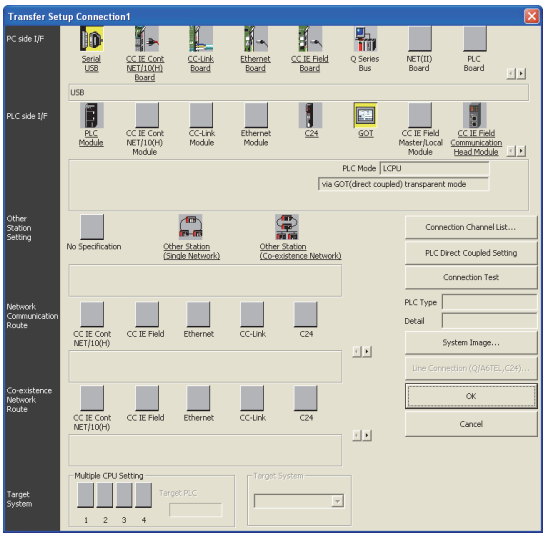

13. The [Transfer Setup Connection1] is displayed.

14. Click [Other station (Single network)].

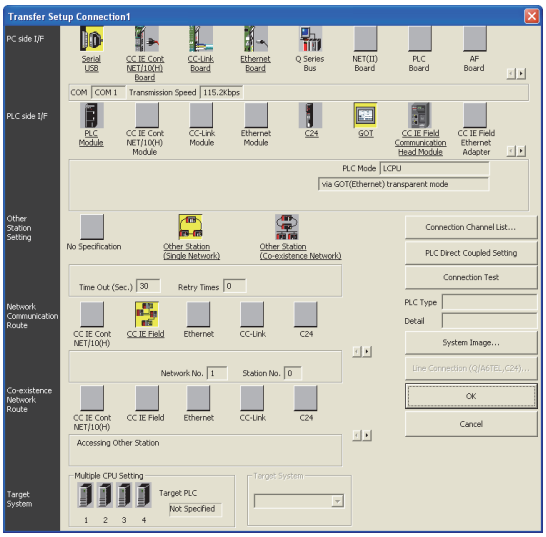

15. Double-click [CC IE Field].

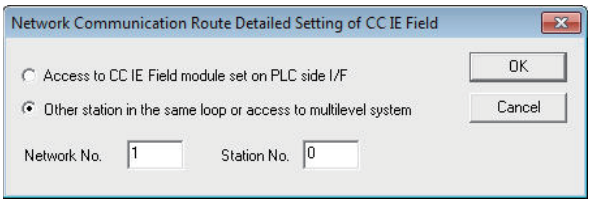

16. Network Communication Route Detailed Setting of CC IE Field is displayed.

17. Set [Network No.] and [Station No.] assigned to CPU, and click [OK].

When connecting to CC-Link IE Field Network Master/Local module of the system configuration example, the setting is as follows.

[Network No.] :1

[Station No.] :0

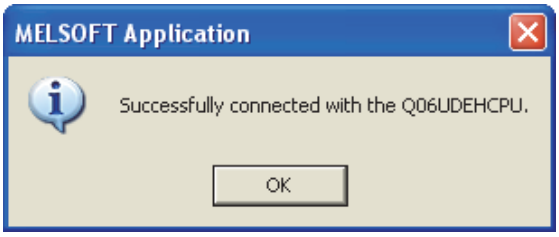

18. The screen returns to [Transfer Setup]. Click [Connection Test] to check if GX Works2 has been connected to the QCPU (Q mode).

■Connecting the GOT and PLC in CC-Link IE controller network connection

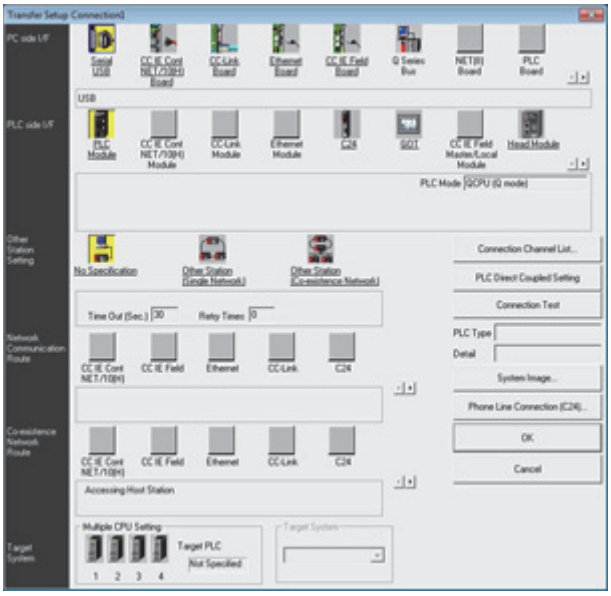

1. Click the Connection Destination view → [Connection Destination] → [(Connection target data name)] in the Navigation window of GX Works2.
2. [Connection Channel Setup] is displayed.
3. Set [Connection Channel Setup].

PC side I/F : Serial USB

PLC side I/F : GOT

Other Station Setting : No Specification

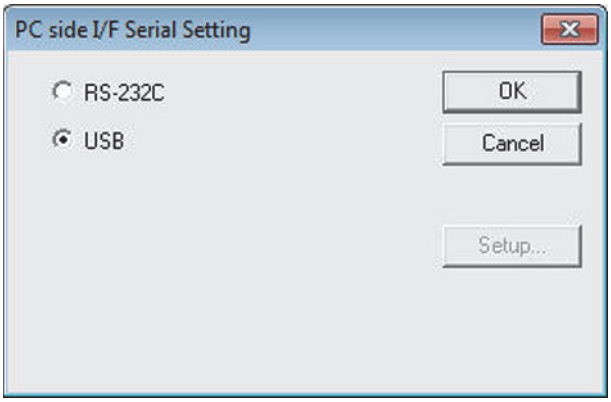

4. Double-click [Serial USB] of the PC side I/F to display [PC side I/F Serial Setting].

5. Check-mark [USB] in [PC side I/F Serial Setting].

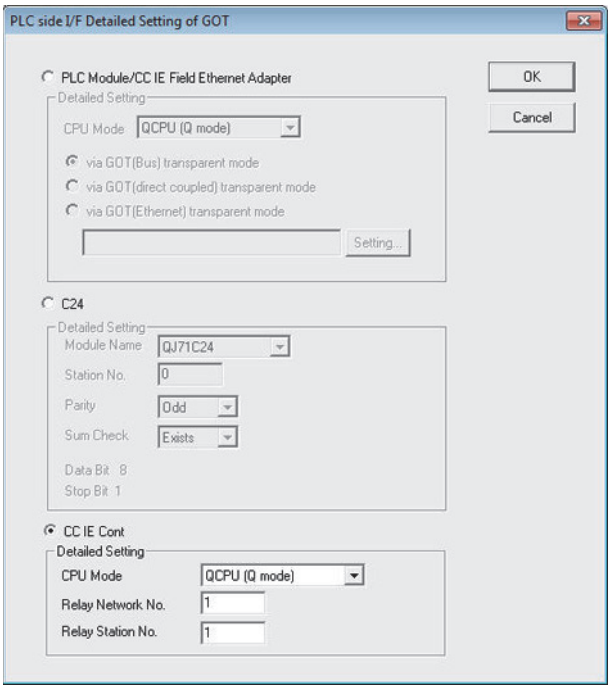

6. Double-click [GOT] of the PLC side I/F to display [PLC side I/F Detailed Setting of GOT].

7. Check-mark [CC IE Cont] in [Detail setting for GOT and PLC connection].

8. Set the [CPU mode] and [Relay network No.] and [Relay station No.].

- When the target PLC has the same network No. as that of the GOT

Set the number assigned to the PLC that is targeted by using the transparent function and CC-Link IE controller network module.

- When the target PLC has a different network No. from that of the GOT

Set the number assigned the PLC that is used as a relay station and CC-Link IE controller network module.

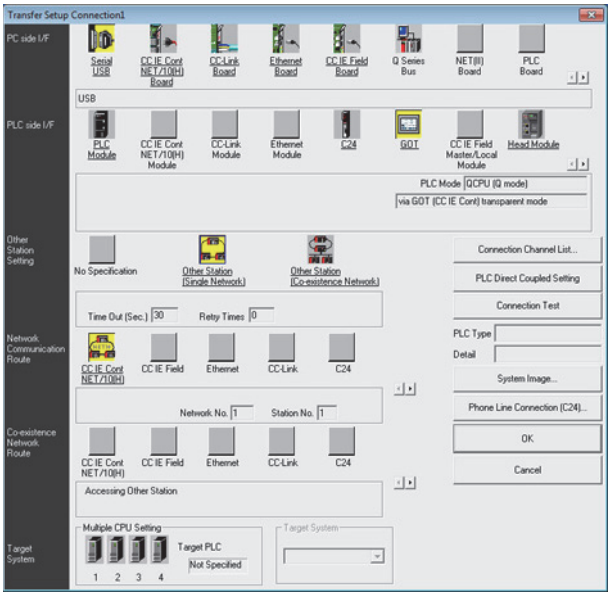

9. Return [Transfer Setup], click [Other Station (Single Network)], and double-click [CC IE Cont NET/10(H)].

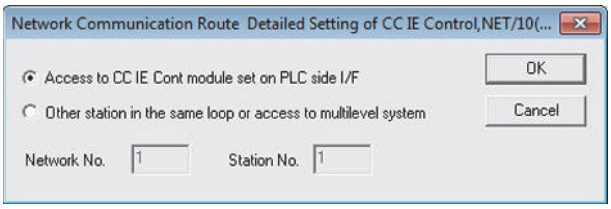

10. Set as shown below and click [OK].

• When the GOT and PLC are on the same network

Select [Access to CC IE Cont module set on PLC side I/F].

• When the GOT and PLC are on the different networks

Select [Other station in the same loop or access to multilevel system] and set [Network No.] and [Station No.].

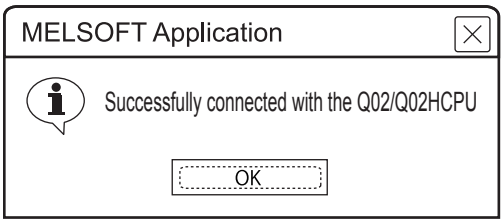

11. [Connection Test] to check if GX Works2 has been connected to the QCPU (Q mode).

When connecting the GOT and the personal computer by Ethernet

■Connecting the GOT and PLC in bus connection or direct CPU connection (serial) (when connecting to QCPU (Q mode))

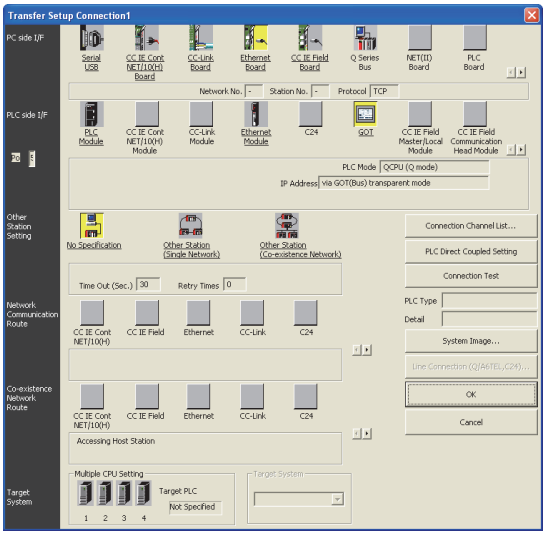

1. Click the Connection Destination view → [Connection Destination] → [(Connection target data name)] in the Navigation window of GX Works2.
2. The [Transfer Setup] is displayed.
3. Set the [Transfer Setup]:

PC side I/F :Ethernet Board

PLC side I/F :GOT

Other Station Setting : No specification

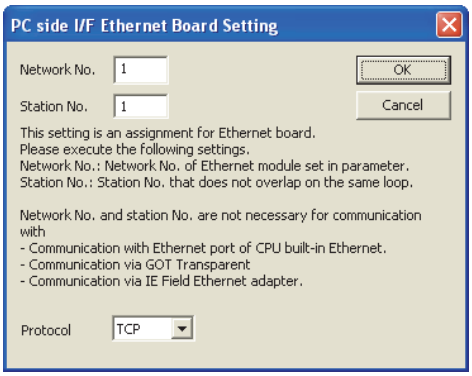

4. Double-click [Ethernet Board] of the PC side I/F to display [PC side I/F Ethernet Board Setting].

5. Set the protocol to TCP. Network No. and Station No. are not required to be changed (default) because they are not used.

(For bus connection)

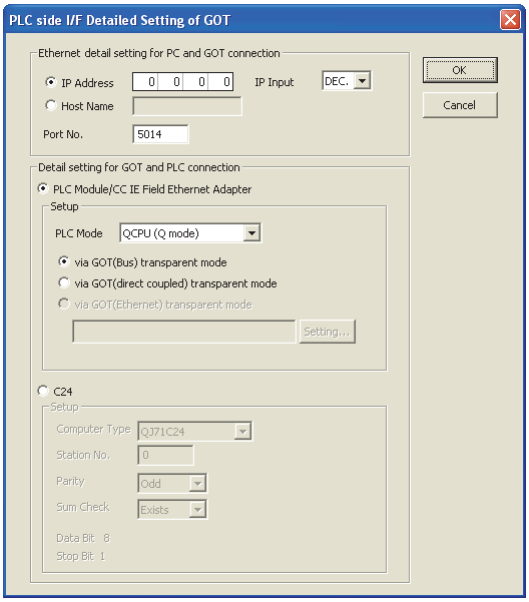

6. Double-click [GOT] of the PLC side I/F to display [PLC side I/F Detailed Setting of GOT].

7. Set the IP address and port No. in [Ethernet detail setting for PC and GOT connection].

Check the IP address and port number on the GOT side in the [GOT Ethernet Setting] window in GT Designer3.

For the details, refer to the following.

📖GT Designer3 (GOT2000) Screen Design Manual

8. Check either of the followings in [Detail setting for GOT and PLC connection].

Bus connection

[via GOT(Bus) transparent mode]

Direct CPU connection (serial)

Mark the [via GOT(direct coupled) transparent mode] checkbox.

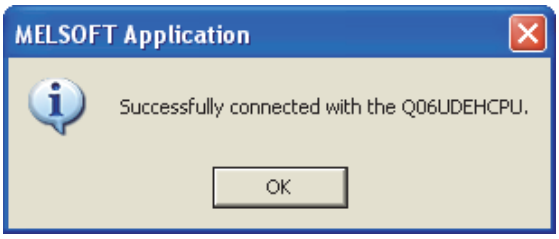

9. The screen returns to [Transfer Setup]. Click [Connection Test] to check if GX Works2 has been connected to the QCPU (Q mode).

■Connecting the GOT and PLC in computer link connection (when connecting to QJ71C24 (N))

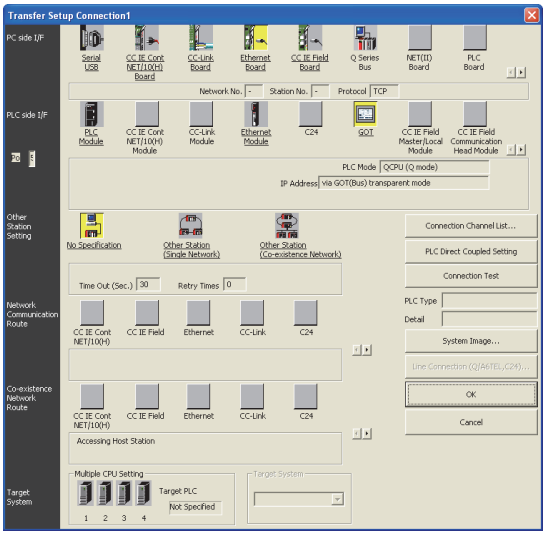

1. Click the Connection Destination view → [Connection Destination] → [(Connection target data name)] in the Navigation window of GX Works2.

2. The [Transfer Setup] is displayed.

3. Set the [Transfer Setup]:

PC side I/F : Ethernet Board

PLC side I/F : GOT

Other Station Setting : No specification

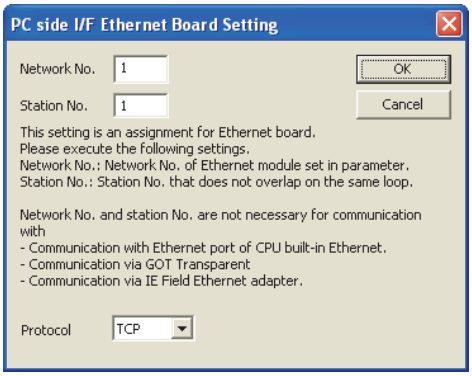

4. Double-click [Ethernet Board] of the PC side I/F to display [PC side I/F Ethernet Board Setting].

5. Set the protocol to TCP. Network No. and Station No. are not required to be changed (default) because they are not used.

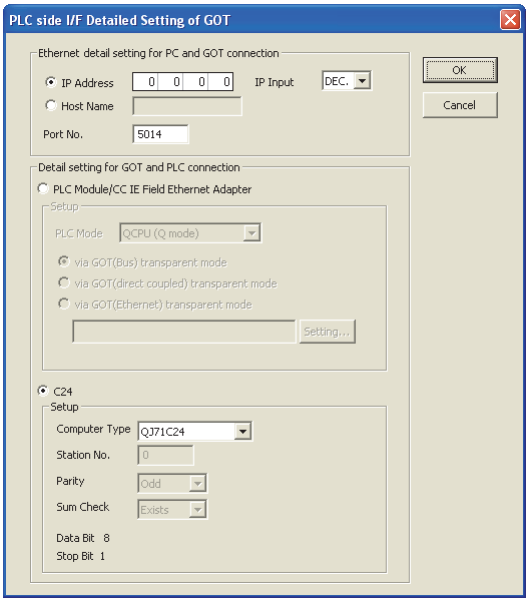

6. Double-click [GOT] of the PLC side I/F to display [PLC side I/F Detailed Setting of GOT].

7. Set the IP address and port No. in [Ethernet detail setting for PC and GOT connection].

Check the IP address and port number on the GOT side in the [GOT Ethernet Setting] window in GT Designer3.

For the details, refer to the following.

📖GT Designer3 (GOT2000) Screen Design Manual

8. Check [C24] in [Detail setting for GOT and PLC connection].

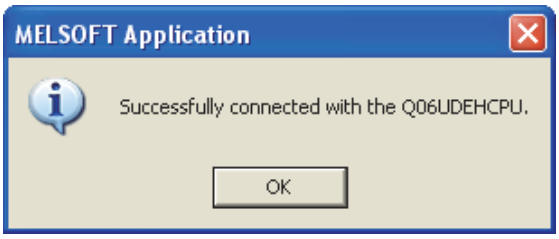

9. The screen returns to [Transfer Setup]. Click [Connection Test] to check if GX Works2 has been connected to the QCPU (Q mode).

■Connecting the GOT and PLC in CC-Link IE controller network connection

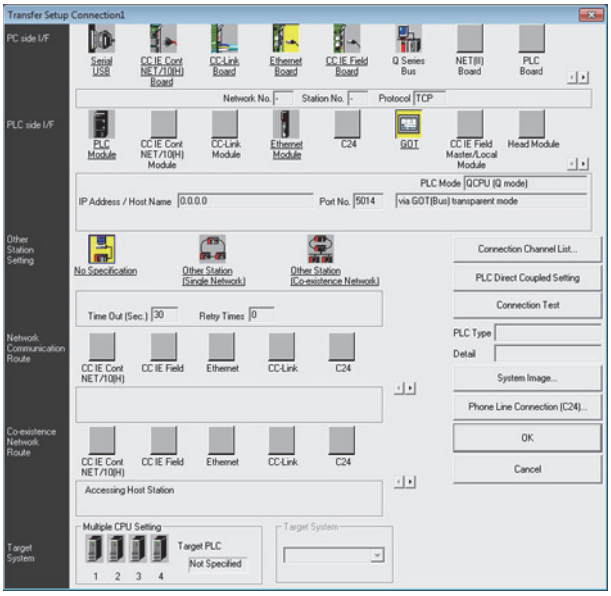

1. Click the Connection Destination view → [Connection Destination] → [(Connection target data name)] in the Navigation window of GX Works2.
2. [Connection Channel Setup] is displayed.
3. Set [Connection Channel Setup].

PC side I/F : Ethernet Board

PLC side I/F : GOT

Other Station Setting : No Specification

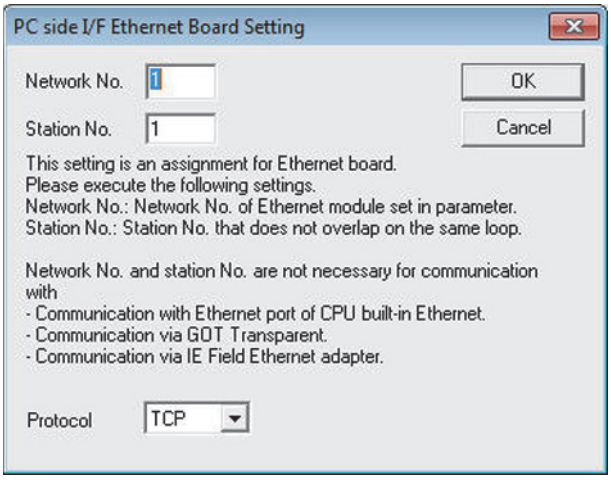

4. Double-click [Ethernet Board] of the PC side I/F to display [PC side I/F Ethernet Board Setting].

5. Set the protocol to TCP.Network No. and Station No. are not required to be changed (default) because they are not used.

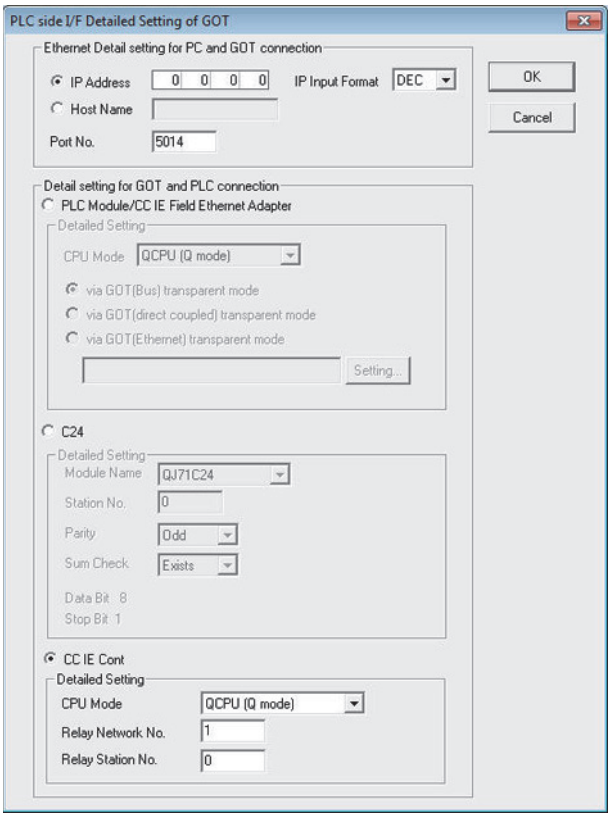

6. Double-click [GOT] of the PLC side I/F to display [PLC side I/F Detailed Setting of GOT].

7. Set the IP address and port No. in [Ethernet detail setting for PC and GOT connection].

Check the IP address and port number on the GOT side in the [GOT Ethernet Setting] window in GT Designer3.

For the details, refer to the following.

📖GT Designer3 (GOT2000) Screen Design Manual

8. Check-mark [CC IE Cont] in [Detail setting for GOT and PLC connection].

9. Set the [CPU mode] and [Relay network No.] and [Relay station No.].

- When the target PLC has the same network No. as that of the GOT

Set the number assigned to the PLC that is targeted by using the transparent function and CC-Link IE controller network module.

- When the target PLC has a different network No. from that of the GOT

Set the number assigned the PLC that is used as a relay station and CC-Link IE controller network module.

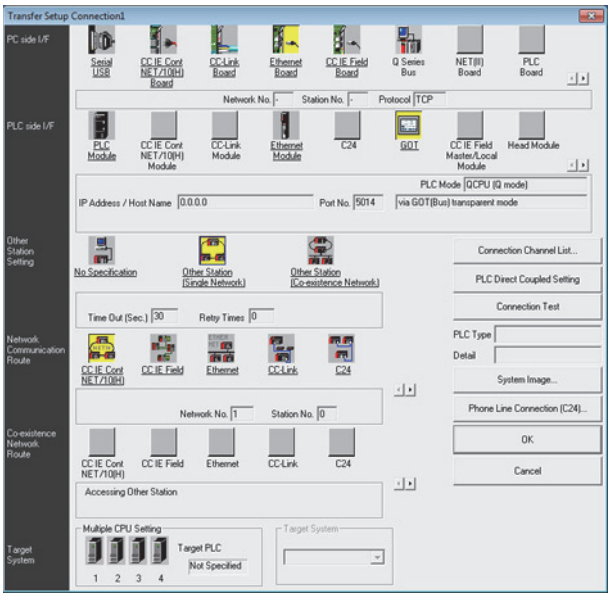

10. Return [Transfer Setup], click [Other Station (Single Network)], and double-click [CC IE Cont NET/10(H)].

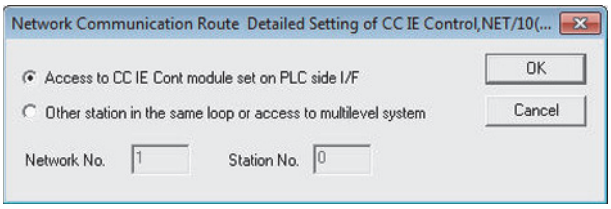

11. Set as shown below and click [OK].

- When the GOT and PLC are on the same network

Select [Access to CC IE Cont module set on PLC side I/F].

- When the GOT and PLC are on the different networks

Select [Other station in the same loop or access to multilevel system] and set [Network No.] and [Station No.].

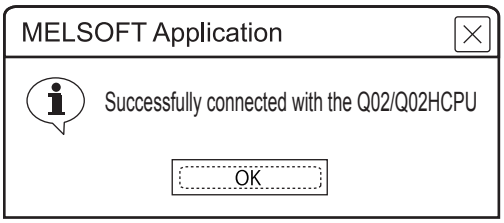

12. [Connection Test] to check if GX Works2 has been connected to the QCPU (Q mode).

■When connecting the GOT and PLC in Ethernet communication

Configure the settings of [Connected Ethernet Controller Setting] on the GOT.

The routing setting may also be needed for the GOT side depending on the system configuration.

For details, refer to the following procedure.

The following shows an example for connecting with QCPU (Q mode).

- When the routing setting is not needed for the GOT side

1) System configuration

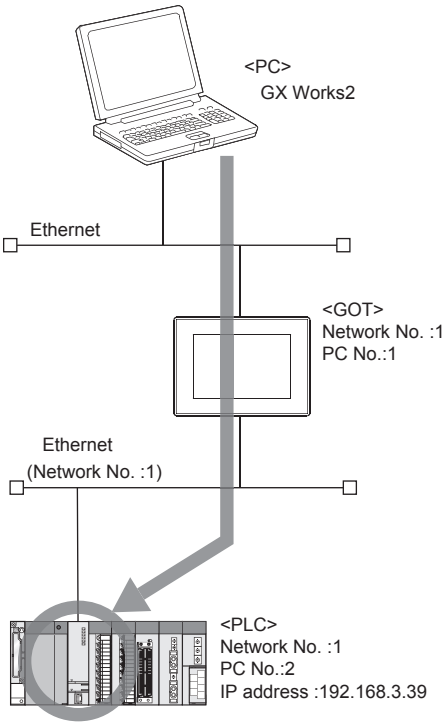

2) [Connected Ethernet Controller Setting] of GT Designer3

Set the network No., PC No., and IP address of the target PLC CPUs for the FA transparent function in GT Designer3.

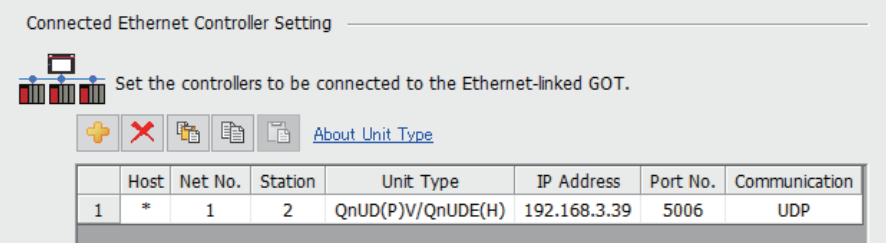

	Host	Net No.	Station	Unit Type	IP Address	Port No.	Communication
1	*	1	2	QnUD(P)V/QnUDE(H)	192.168.3.39	5006	UDP

☞ Page 217 ETHERNET CONNECTION

Point

For FXCPU

FA transparent function is applied to only FXCPU which sets a host station.

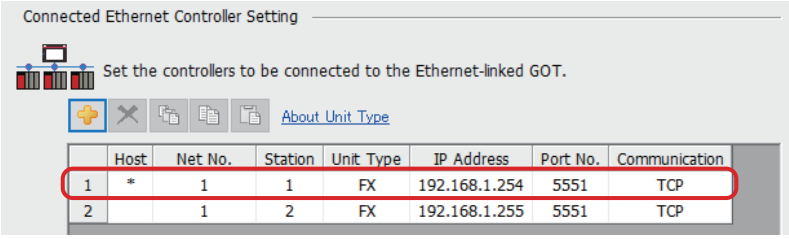

	Host	Net No.	Station	Unit Type	IP Address	Port No.	Communication
1	*	1	1	FX	192.168.1.254	5551	TCP
2		1	2	FX	192.168.1.255	5551	TCP

3) GX Works2 settings

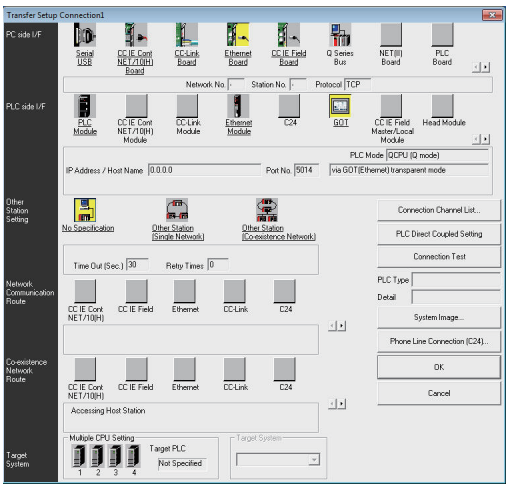

1. Click the Connection Destination view → [Connection Destination] → [(Connection target data name)] in the Navigation window of GX Works2. The [Transfer Setup] is displayed.

2. Set the [Transfer Setup]:

PC side I/F: Ethernet Board

PLC side I/F: GOT

Other Station Setting: No Specification

3. Double-click [GOT] of the PLC side I/F to display [PLC side I/F Detailed Setting of GOT].

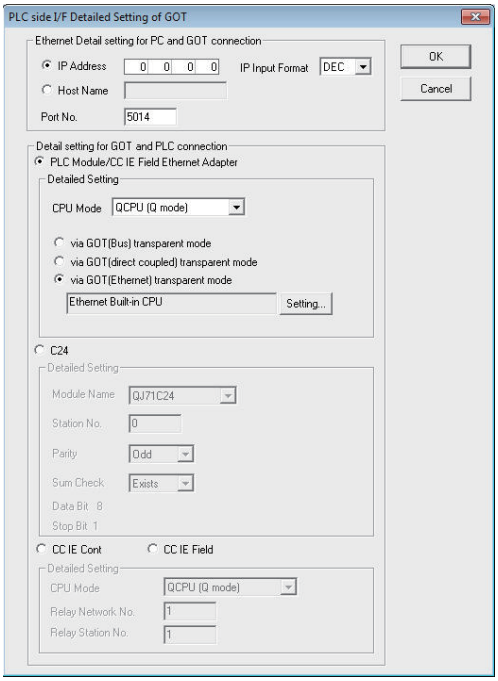

4. Set the IP address and port No. in [Ethernet detail setting for PC and GOT connection].

Check the IP address and port number on the GOT side in the [GOT Ethernet Setting] window in GT Designer3.

For the details, refer to the following.

📖GT Designer3 (GOT2000) Screen Design Manual

5. On the [Detail setting for GOT and PLC connection], check-mark [via GOT(Ethernet) transparent mode] and click [Setting].

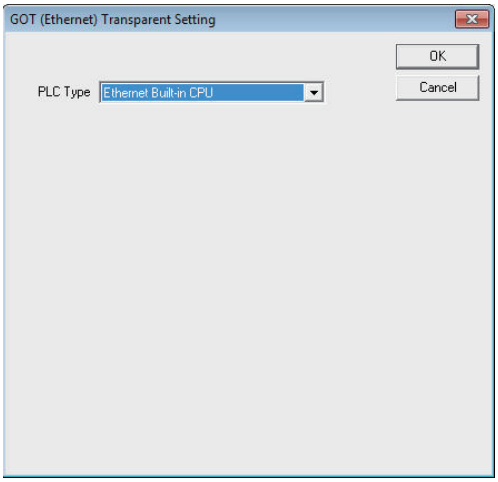

6. Specify [Built-in Ethernet port CPU] for the connection destination of the GOT.

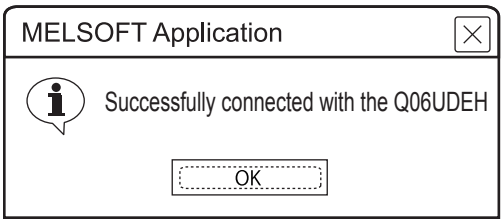

7. [Connection Test] to check if GX Works2 has been connected to the QCPU (Q mode).

• When the routing setting is needed for the GOT side

1) System configuration

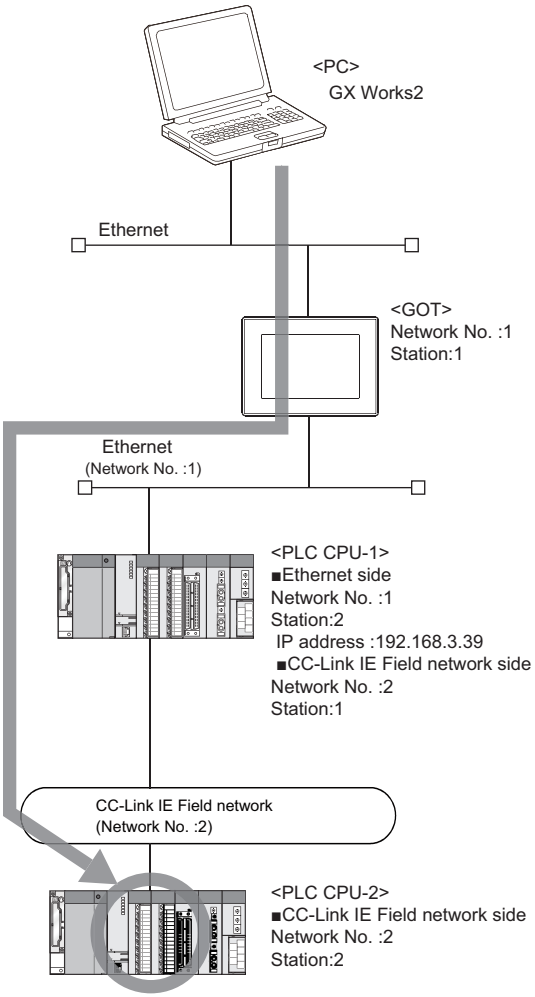

2) [Connected Ethernet Controller Setting] of GT Designer3

Set the network No., PC No., and IP address of the target PLC CPUs for the FA transparent function in GT Designer3.

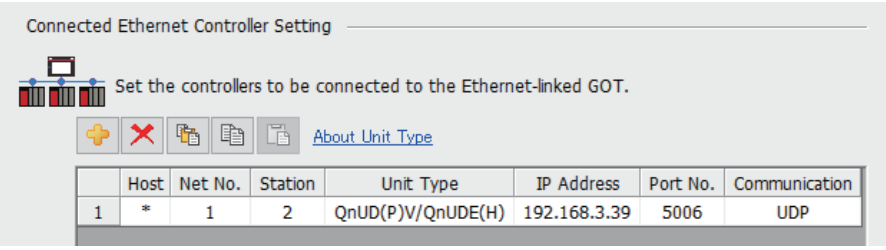

	Host	Net No.	Station	Unit Type	IP Address	Port No.	Communication
1	*	1	2	QnUD(P)V/QnUDE(H)	192.168.3.39	5006	UDP

☞ Page 217 ETHERNET CONNECTION

3) Routing setting of GT Designer3

Be sure to set the transfer network No., relay network No., and relay station No. for CPUs supporting the FAtransparent function by GT Desinger3.

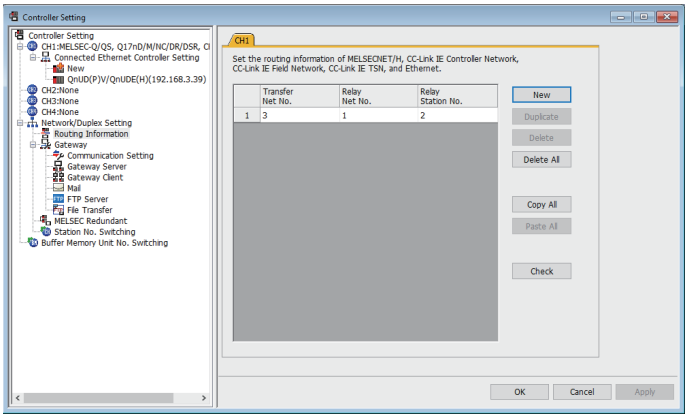

☞ Page 217 ETHERNET CONNECTION

4) GX Works2 settings

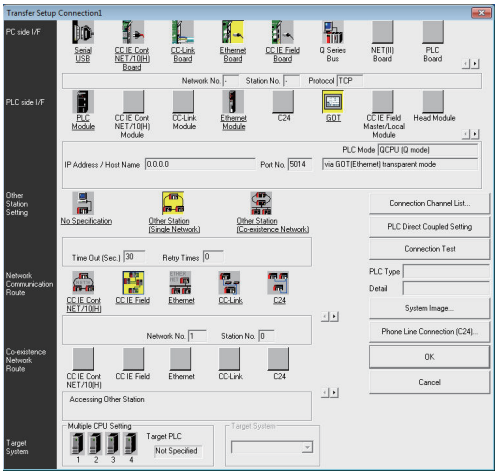

1. Click the Connection Destination view → [Connection Destination] → [(Connection target data name)] in the Navigation window of GX Works2. The [Transfer Setup] is displayed.

2. Set the [Transfer Setup].

PC side I/F: Ethernet Board

PLC side I/F: GOT

Other Station Setting: Other Station (Single Network)

Network path: CC IE Field

3. Double-click [CC IE Field] to set the network No. and station No.

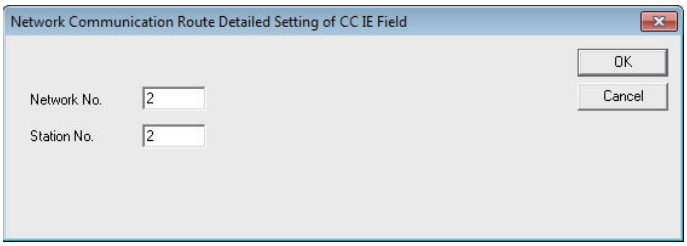

4. Double-click [GOT] of the PLC side I/F to display [PLC side I/F Detailed Setting of GOT].

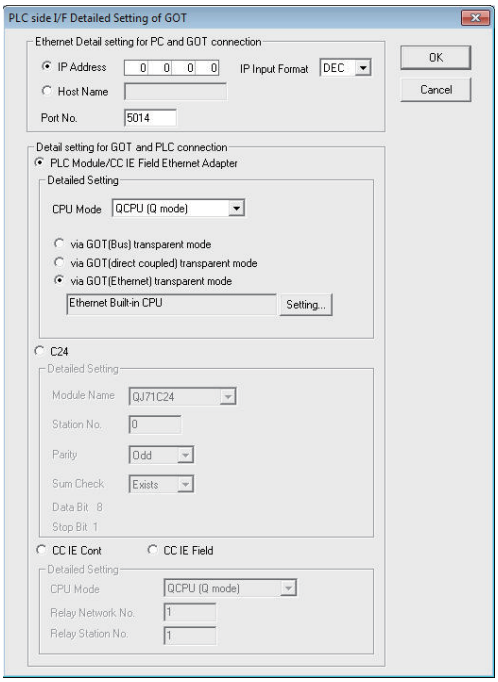

5. Set the IP address and port No. in [Ethernet detail setting for PC and GOT connection].

Check the IP address and port number on the GOT side in the [GOT Ethernet Setting] window in GT Designer3.

For the details, refer to the following.

📖GT Designer3 (GOT2000) Screen Design Manual

6. On the [Detail setting for GOT and PLC connection], check-mark [via GOT(Ethernet) transparent mode] and click [Setting].

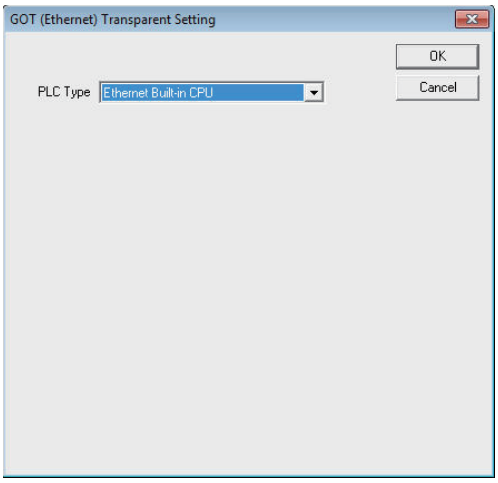

7. Specify [Built-in Ethernet port CPU] or [QJ71E71] for the connection destination of the GOT.

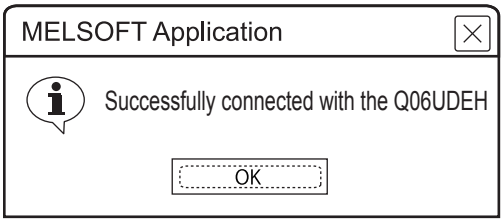

8. [Connection Test] to check if GX Works2 has been connected to the QCPU (Q mode).

Accessing by GX LogViewer

The following shows the procedure to set the FA transparent function of GX LogViewer.

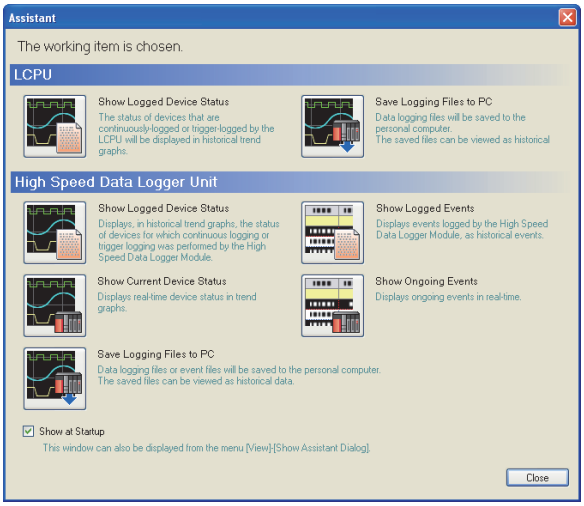

1. Click [Show Assistant Dialog] for [View] on GX LogViewer.

2. The [Assistant] dialog box is displayed.

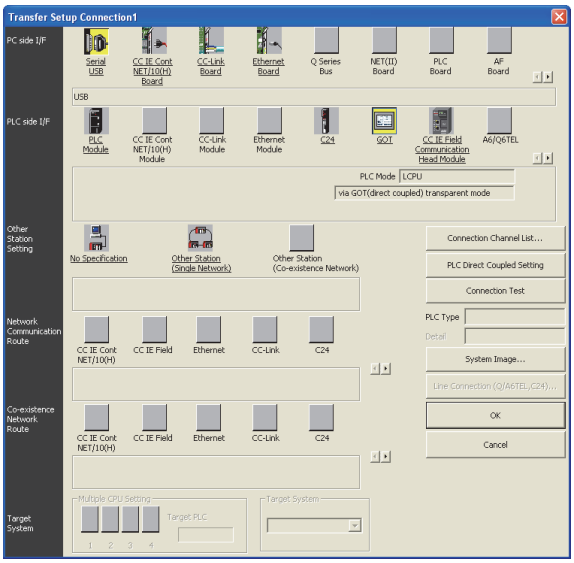

3. Click [LCPU] → [Show Logged Device Status] in the [Assistant] dialog box.

4. The [Transfer Setup Connection 1] dialog box is displayed.

5. Set the [Transfer Setup Connection 1]:

PC side I/F: Serial USB

PLC side I/F: GOT

Other Station Setting: (Select from the system configuration)

6. For [PC side I/F Serial Setting] and [PLC side I/F Detailed Setting of GOT] of [Transfer Setup], refer to the following.

☞ Page 1282 Accessing by GX Works2

Accessing PLC by GX Configurator-QP

The following shows the procedure to set the FA transparent function of GX Configurator-QP.

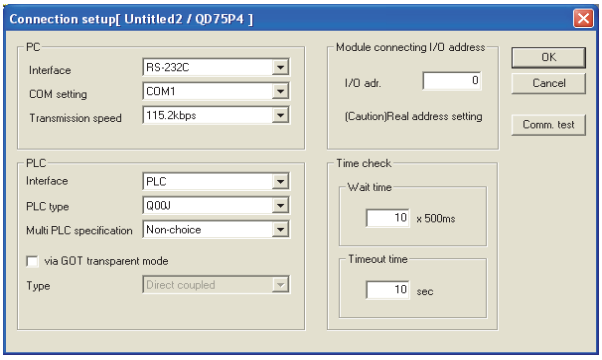

1. Click [Connection setup] for [Online] on GX Configurator-QP.

2. The [Connection setup] is displayed.

3. Set the following in [PC] of the [Connection setup] dialog.

Interface: USB

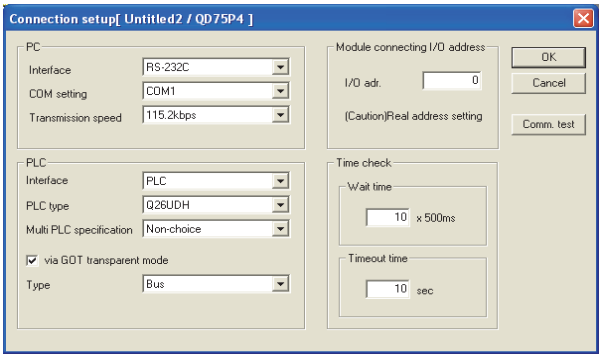

4. Set the [PLC side] in [Connection setup].

PLC type: Q series PLC type

Multi PLC specification: None/No.1 to 4

Direct CPU connection, mark the [via GOT transparent mode] checkbox.

Bus connection

Interface: PLC

Type: Bus

Direct CPU connection (serial)

Interface: PLC

Type: Direct coupled

Computer link connection

Interface: C24

(For bus connection only)

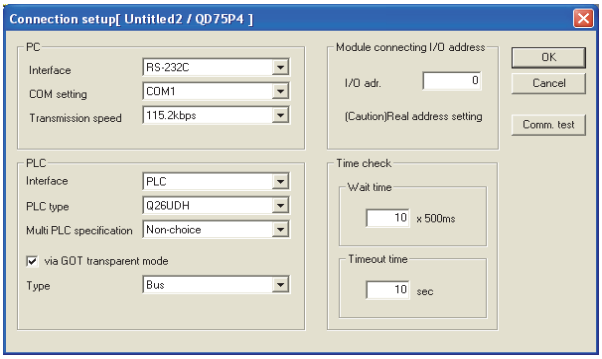

5. Set the [Module connecting I/O address] in [Connection setup].

Specify the actual IP address of the module.

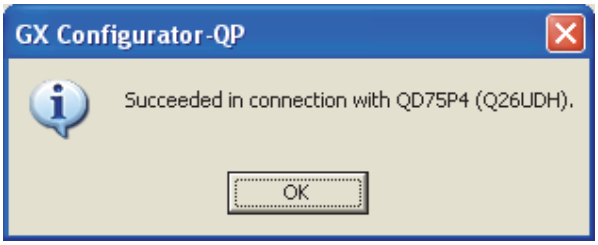

6. The screen returns to the [Connection setup]. Click the [Connection Test] to check if GX Configurator-QP has been connected to the QD75***(QnCPU).

Accessing by the MT Developer

This section explains the procedure for setting the FA transparent function of MT Developer using the setting when the motion CPU (Q series) is connected as an example.

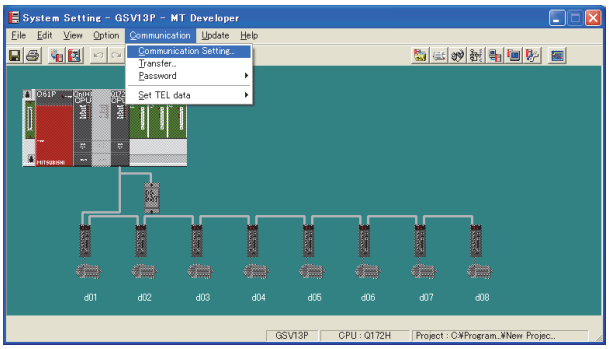

1. Click [Communication] → [Communication Setting] in MT Developer.

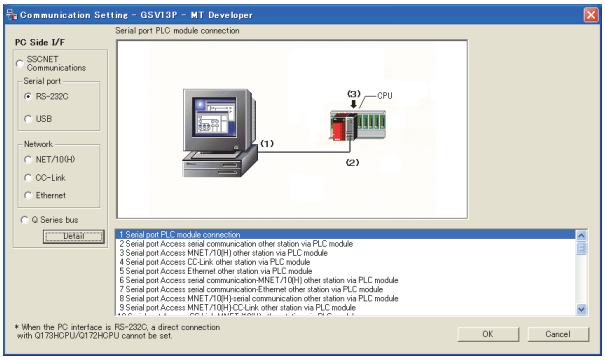

2. Select [USB] in [Serial port].

3. Click [Detail].

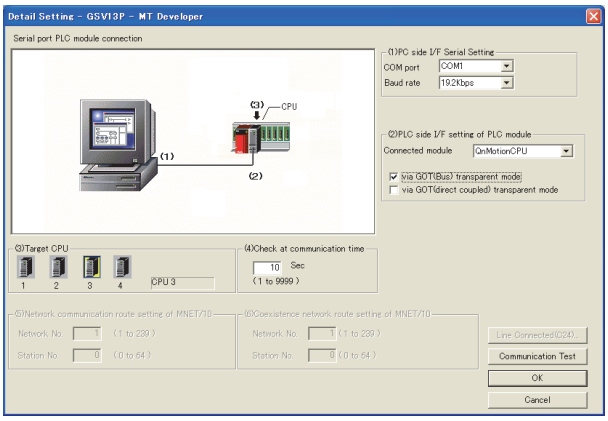

4. Check-mark either of the following in [PLC side I/F setting of PLC module].

Bus connection

[via GOT(Bus) transparent mode]

Direct CPU connection (serial)

[via GOT(direct coupled) transparent mode]

5. As necessary, select a CPU that is targeted by using the transparent function in [CPU].

6. Click [Connection Test].

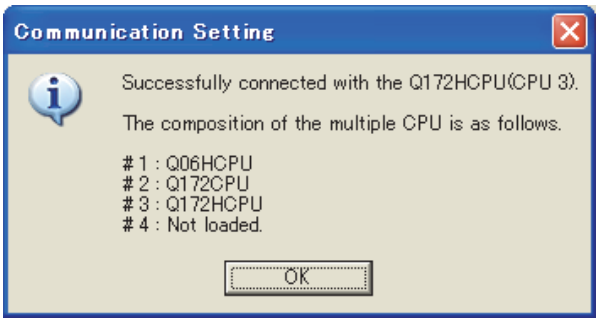

7. Confirm that the personal computer is connected to the Motion CPU (Q series).

Accessing by the MT Works2

This section explains the procedure to set the FA transparent function of MT Works2 using connection to a Motion CPU (MELSEC iQ-R series or Q series) as an example.

When connecting the GOT and the personal computer by USB

■Connecting the GOT and a PLC using the bus connection or direct CPU connection (serial) (Motion CPU (Q series) only)

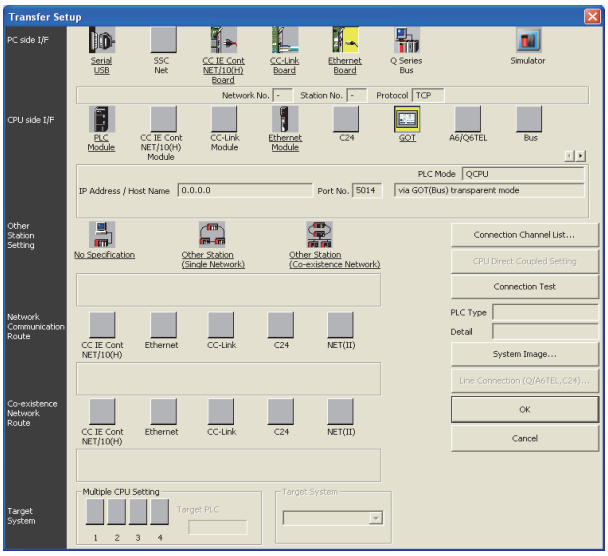

1. Click [Transfer setup] → [Online].

2. The [Transfer setup] is displayed.

3. Set the [Transfer setup]:

PC side I/F: Serial USB

CPU side I/F: GOT

Other Station Setting : No specification

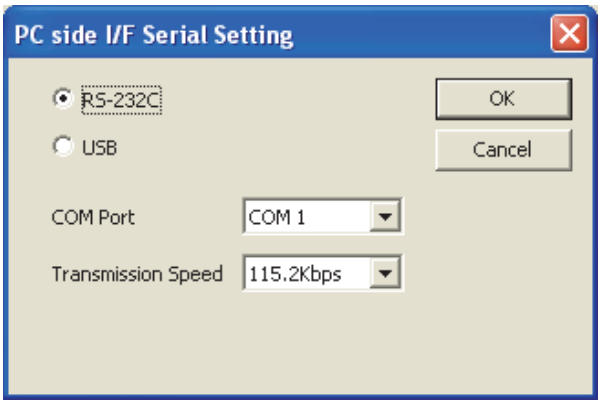

4. Double-click [Serial] of the PLC side I/F to display [PC side I/F Serial setting].

5. Select [USB] in the [PC side I/F Serial Setting] dialog.

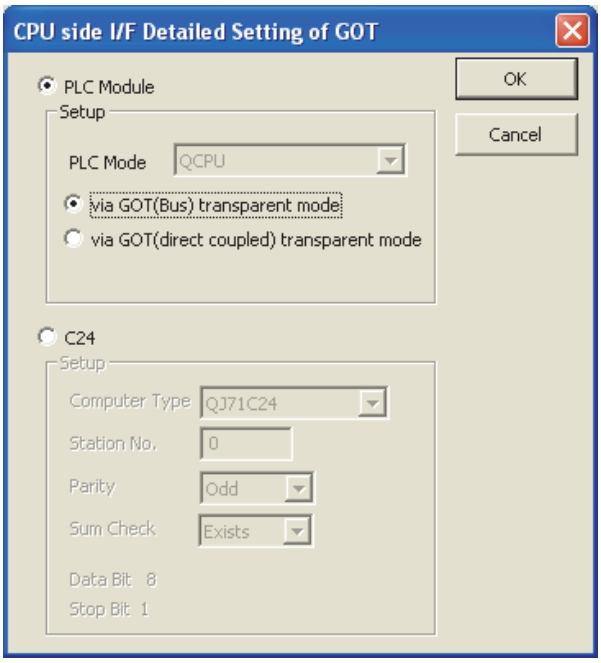

6. Double-click [GOT] of the CPU side I/F to display [CPU side I/F Detailed Setting of GOT].

7. Check-mark either of the following in [CPU side I/F Detailed Setting of GOT].

Bus connection

Mark the [via GOT(Bus) transparent mode] checkbox.

Direct CPU connection (serial)

Mark the [via GOT (direct coupled) transparent mode] checkbox.

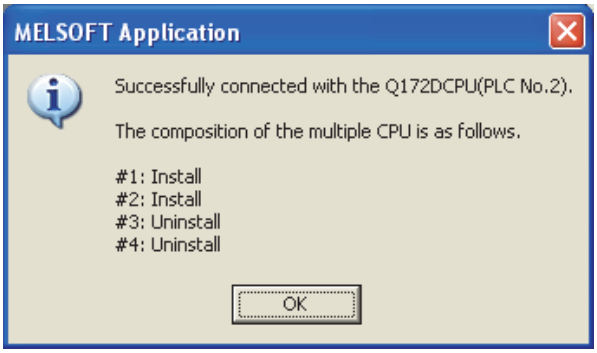

8. The screen returns to [Transfer setup]. Click [Connection Test] to check if MT Works2 has been connected to the motion controller (Q mode).

■Connecting the GOT and a PLC using the bus connection or direct CPU connection (Motion CPU (Q series) only)

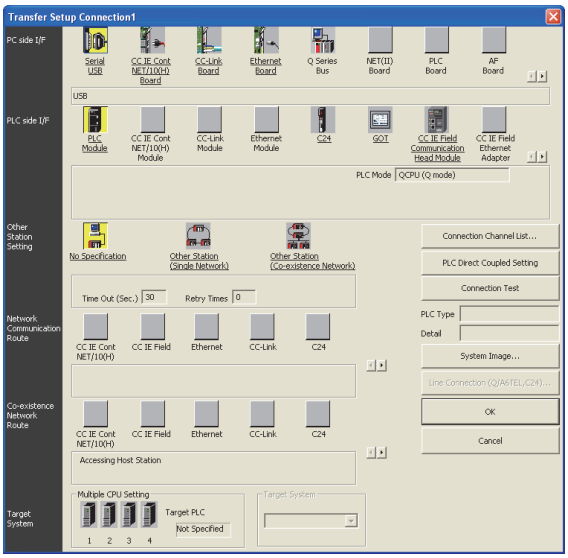

1. Click the Connection Destination view → [Connection Destination] → [(Connection target data name)] in the Navigation window of MT Works2.

2. The [Transfer Setup] is displayed.

3. Set the [Transfer Setup]:

PC side I/F: Serial USB

PLC side I/F: GOT

Other Station Setting: No Specification:

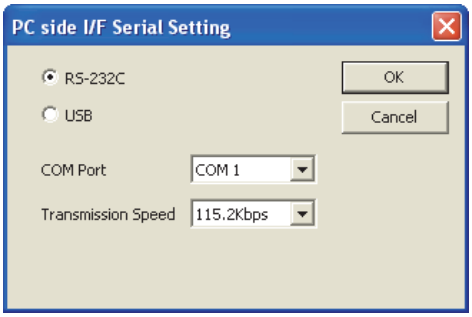

4. Double-click [Serial USB] of the PC side I/F to display [PC side I/F Serial Setting].

5. Select [USB] in the [PC side I/F Serial Setting] dialog.

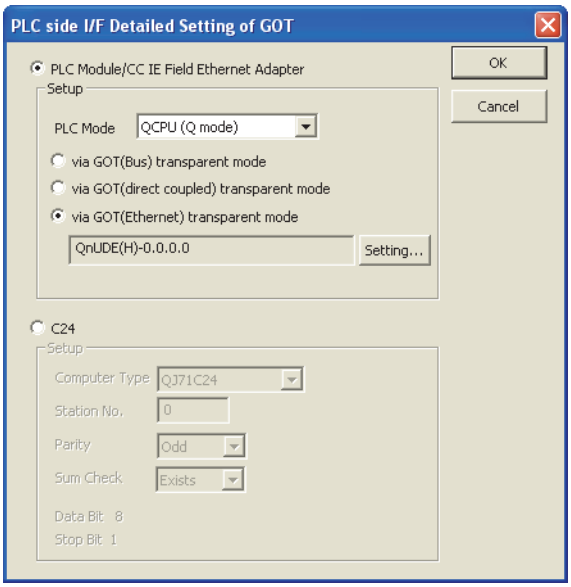

6. Double-click [GOT] of the PLC side I/F to display [PLC side I/F Detailed Setting of GOT].

7. PLC side I/F Detailed Setting of GOT

Mark the [via GOT(Ethernet) transparent mode] checkbox and click [Set].

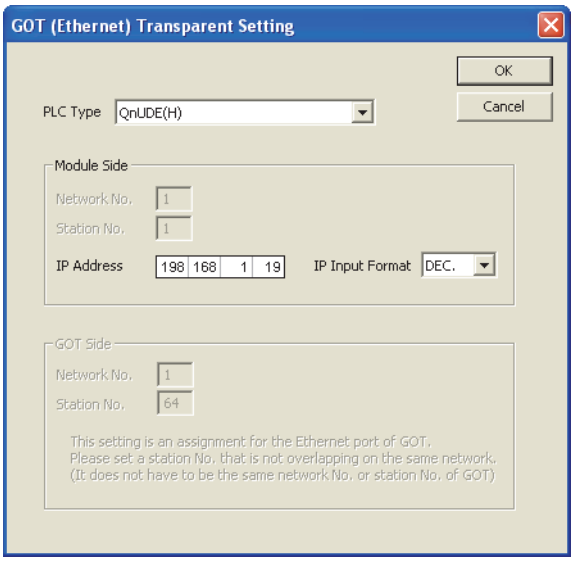

8. By clicking [Set], the [GOT (Ethernet) Transparent Setting] is displayed.

Here, set the built-in Ethernet port QCPU or Ethernet module, which is firstly connected via a GOT.

9. Set [QnUDE(H)] or [QJ71E71] for [Type name].

10. Specify the number for [Network No.] and [Station No.] same as the number assigned to the Ethernet module.

When [QnUDE(H)] is set for [Type name], the setting is not required.

11. Specify the IP address for [IP address] same as the IP address assigned to the built-in Ethernet port QCPU or Ethernet module.

12. The screen returns to [Transfer setup]. Click [Connection Test] to check if MT Works2 has been connected to the motion controller (Q mode).

When connecting the GOT and the personal computer by Ethernet

■Connecting the GOT and a PLC using the bus connection or direct CPU connection (serial) (Motion CPU (Q series) only)

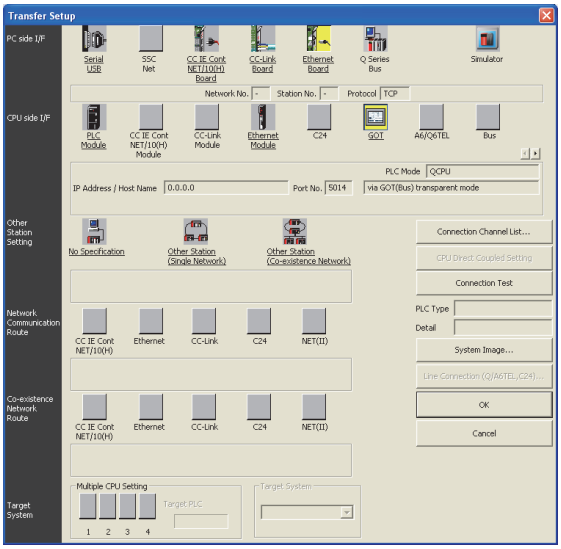

1. Click the Connection Destination view → [Connection Destination] → [(Connection target data name)] in the Navigation window of MT Works2.

2. The [Transfer Setup] is displayed.

3. Set the [Transfer Setup]:

PC side I/F: Ethernet Board

PLC side I/F: GOT

Other Station Setting: No Specification:

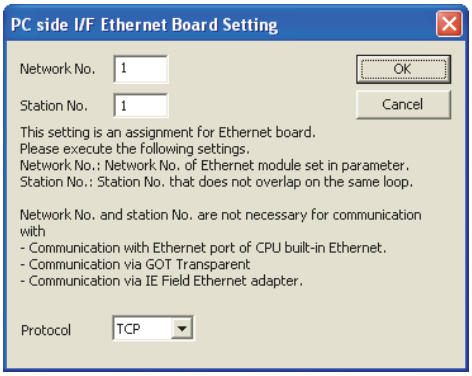

4. Double-click [Ethernet Board] of the PC side I/F to display [PC side I/F Ethernet Board Setting].

5. Set the protocol to TCP. Network No. and Station No. are not required to be changed (default) because they are not used.

(For bus connection)

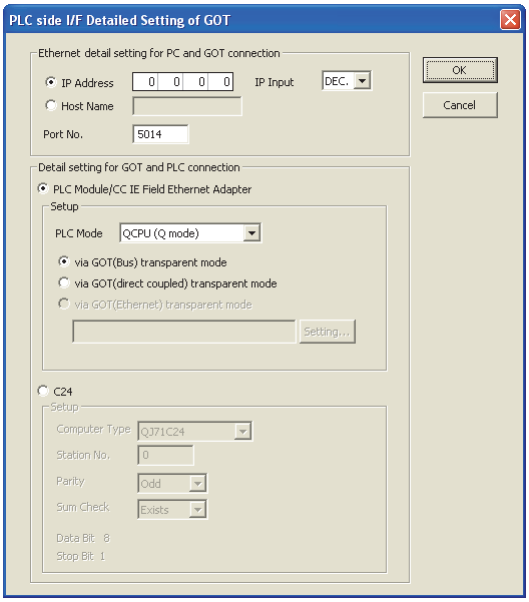

6. Double-click [GOT] of the PLC side I/F to display [PLC side I/F Detailed Setting of GOT].

7. Set the IP address and port No. in [Ethernet detail setting for PC and GOT connection].

Check the IP address and port number on the GOT side in the [GOT Ethernet Setting] window in GT Designer3.

For the details, refer to the following.

📖GT Designer3 (GOT2000) Screen Design Manual

8. Check either of the followings in [Detail setting for GOT and PLC connection].

Bus connection

[via GOT(Bus) transparent mode]

Direct CPU connection (serial)

Mark the [via GOT(direct coupled) transparent mode] checkbox.

9. The screen returns to [Transfer Setup]. Click [Connection Test] to check if MT Works2 has been connected to the Motion controller (Q mode).

■When connecting the GOT and PLC in Ethernet communication

Configure the settings of [Connected Ethernet Controller Setting] on the GOT.

The routing setting may also be needed for the GOT side depending on the system configuration.

For details, refer to the following procedure.

The following shows an example of connecting the GOT to the Motion CPU (MELSEC iQ-R series).

- When the routing setting is not needed for the GOT side

1) System configuration

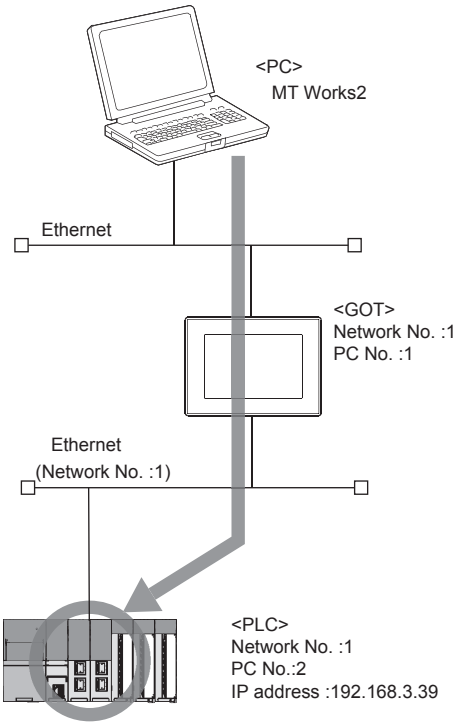

2) [Connected Ethernet Controller Setting] of GT Designer3

Set the network No., PC No., and IP address of the target PLC CPUs for the FA transparent function in GT Designer3.

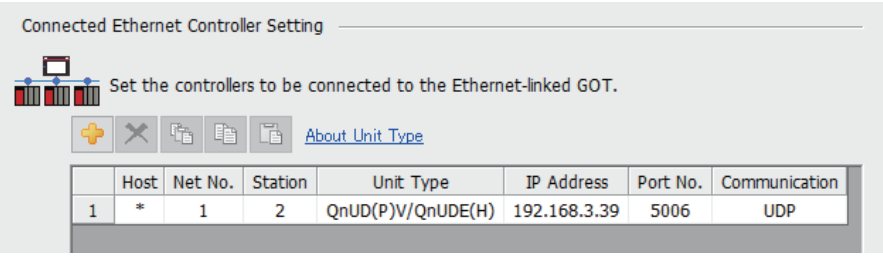

☞ Page 217 ETHERNET CONNECTION

3) MT Works2 settings

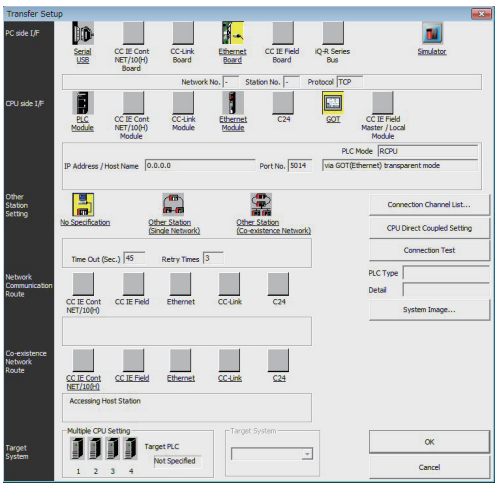

1. Click [Online] → [Transfer Setup] on MT Works2. The [Transfer Setup] is displayed.

2. Set the [Transfer Setup].

PC side I/F: Ethernet Board

PLC side I/F: GOT

Other Station Setting: Other Station (Single Network)

Network path: CC IE Field

3. Double-click [GOT] of the PLC side I/F to display [PLC side I/F Detailed Setting of GOT].

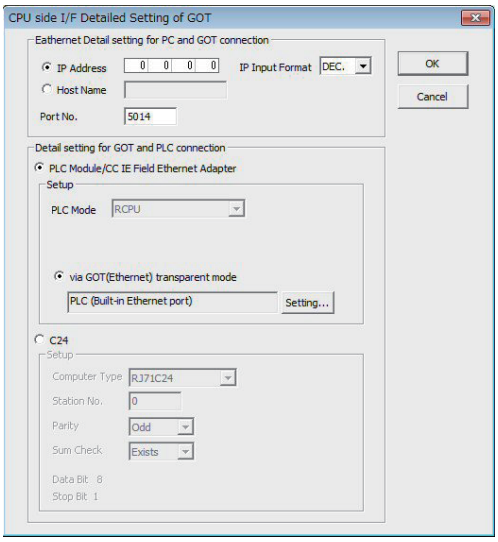

4. Set the IP address and port No. in [Ethernet detail setting for PC and GOT connection].

Check the IP address and port number on the GOT side in the [GOT Ethernet Setting] window in GT Designer3.

For the details, refer to the following.

GT Designer3 (GOT2000) Screen Design Manual

5. On the [Detail setting for GOT and PLC connection], check-mark [via GOT(Ethernet) transparent mode] and click [Setting].

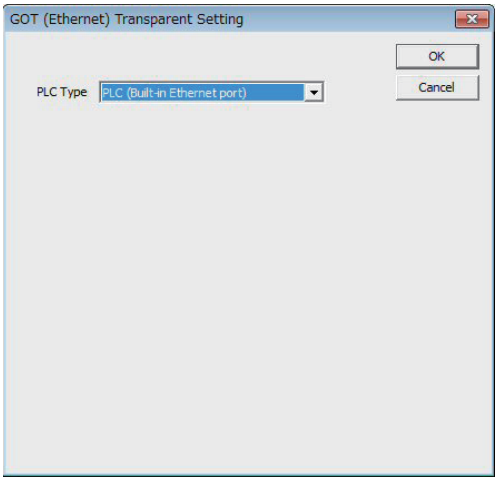

6. Specify [Built-in Ethernet port CPU] for the connection destination of the GOT.

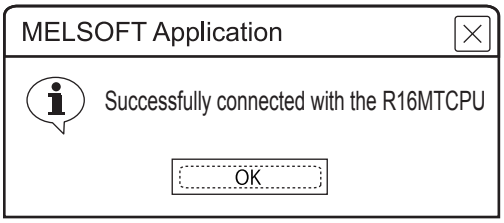

7. [Connection Test] to check if MT Works2 has been connected to the R16MTCPU.

• When the routing setting is needed for the GOT side

1) System configuration

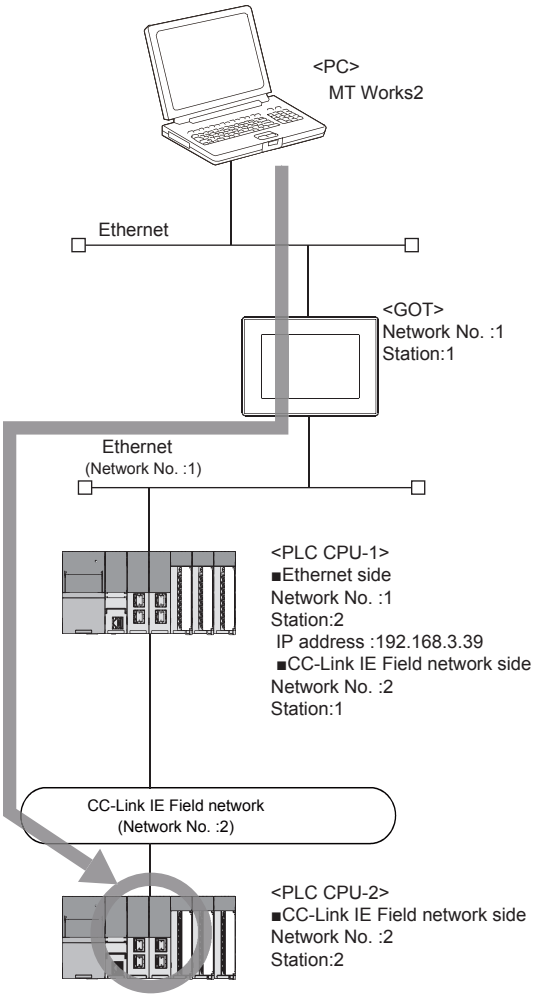

2) [Connected Ethernet Controller Setting] of GT Designer3

Set the network No., PC No., and IP address of the target PLC CPUs for the FA transparent function in GT Designer3.

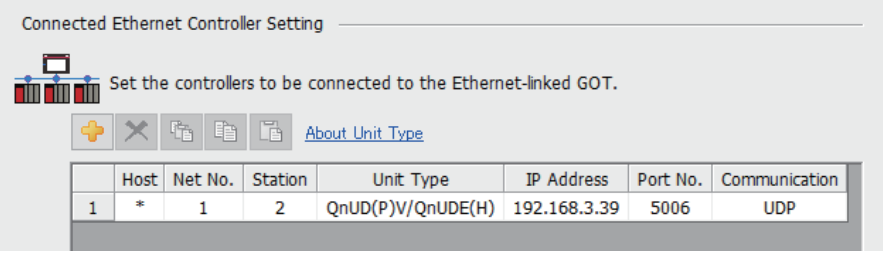

	Host	Net No.	Station	Unit Type	IP Address	Port No.	Communication
1	*	1	2	QnUD(P)V/QnUDE(H)	192.168.3.39	5006	UDP

☞ Page 217 ETHERNET CONNECTION

3) Routing setting of GT Designer3

Be sure to set the transfer network No., relay network No., and relay station No. for CPUs supporting the FAtransparent function by GT Desinger3.

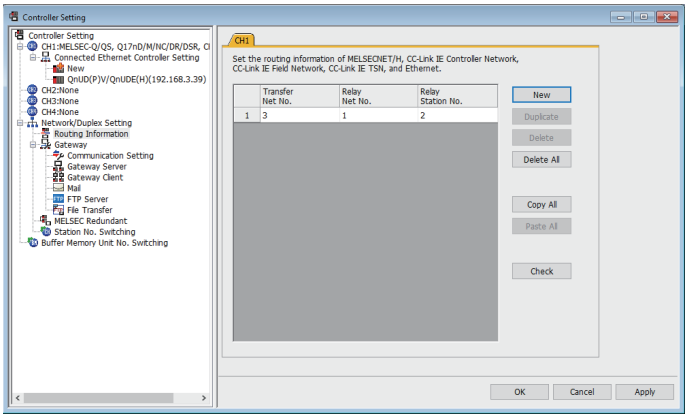

☞ Page 217 ETHERNET CONNECTION

4) MT Works2 settings

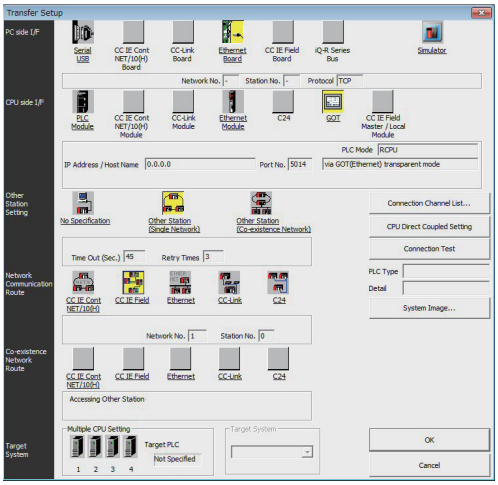

1. Click [Online] → [Transfer Setup] on MT Works2. The [Transfer Setup] is displayed.

2. Set the [Transfer Setup].

PC side I/F: Ethernet Board

PLC side I/F: GOT

Other Station Setting: Other Station (Single Network)

Network path: CC IE Field

3. Double-click [CC IE Field] to set the network No. and station No.

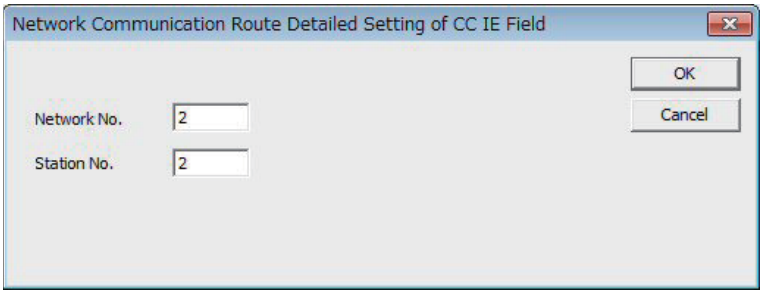

4. Double-click [GOT] of the PLC side I/F to display [PLC side I/F Detailed Setting of GOT].

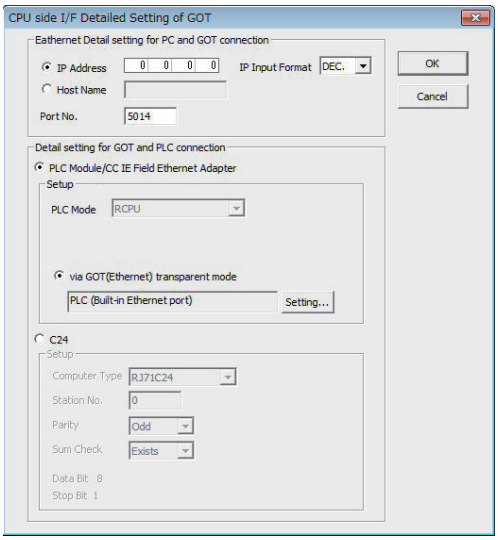

5. Set the IP address and port No. in [Ethernet detail setting for PC and GOT connection].

Check the IP address and port number on the GOT side in the [GOT Ethernet Setting] window in GT Designer3.

For the details, refer to the following.

GT Designer3 (GOT2000) Screen Design Manual

6. On the [Detail setting for GOT and PLC connection], check-mark [via GOT(Ethernet) transparent mode] and click [Setting].

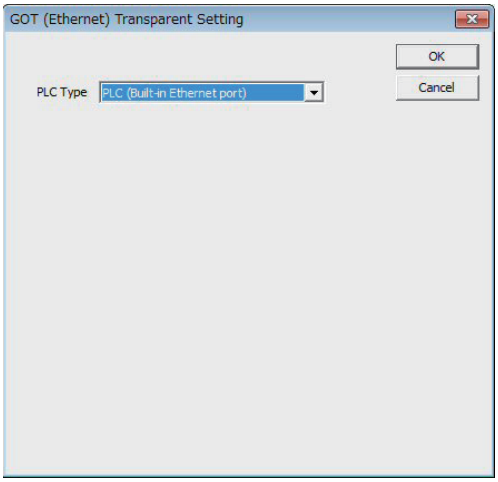

7. Specify [Built-in Ethernet port CPU] or [RJ71EN71] for the connection destination of the GOT.

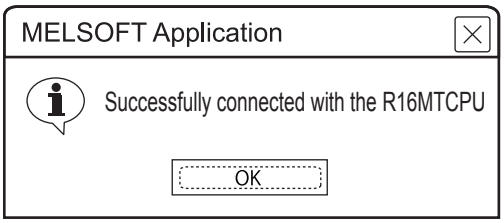

8. [Connection Test] to check if MT Works2 has been connected to the R16MTCPU.

Accessing the servo amplifier by the MR Configurator

Make the FA transparent settings with the of MT Developer.

For details, refer to the following:

☞ Page 1313 Accessing by the MT Developer

Accessing the servo amplifier by the MR Configurator2

Make the FA transparent settings in the MT Works2 communication settings.

For details of MT Works2, refer to the following.

☞ Page 1315 Accessing by the MT Works2

Accessing the inverter by the FR Configurator

This section explains how to set the FA transparent function of FR Configurator using a connection to the FR-A700 or FR-F700 series as an example.

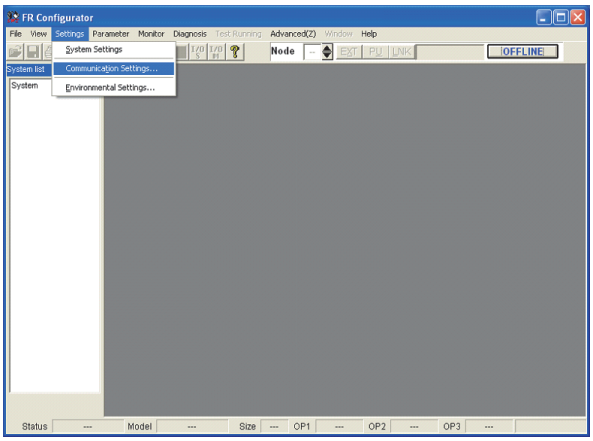

1. Click [Settings] → [Communication Settings...] in FR Configurator.

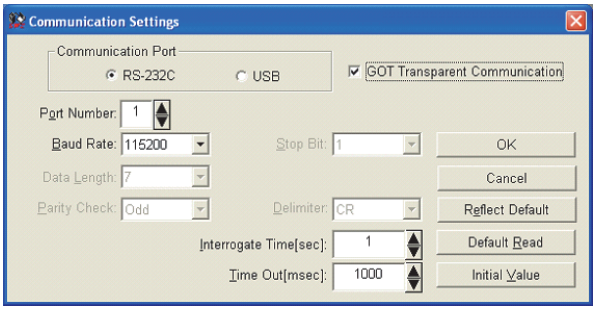

2. Select [USB] in [Communication Port].

3. Click [GOT Transparent Communication].

4. Click the [OK].

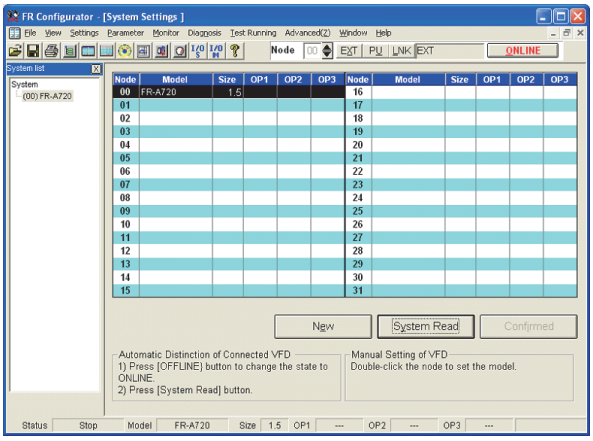

5. Click [OFFLINE] to make it [ONLINE].

6. Click [System Read], and ensure that the GOT has been connected to the FR-A700 or FR-F700 series properly.

Accessing the inverter by the FR Configurator2

This section explains how to set the FA transparent function of FR Configurator2 using a connection to the FR-E700 (FR-E700-NE), FR-A800, or FR-F800 series as an example.

When directly connecting the GOT and inverter

■USB connection between the GOT and personal computer, serial connection between the GOT and inverter

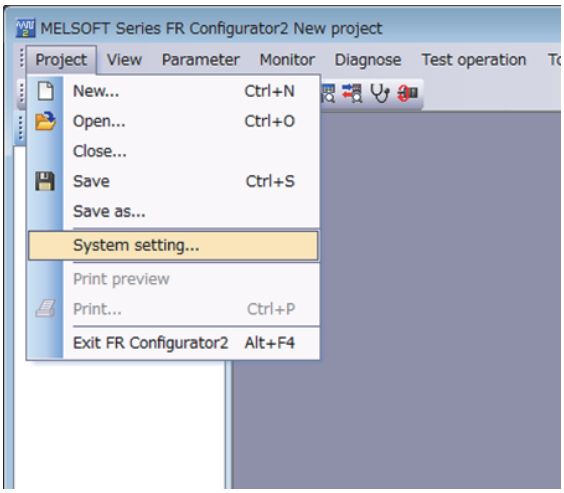

1. Click [Project] → [System setting] in FR Configurator2 to display the [System setting] dialog.

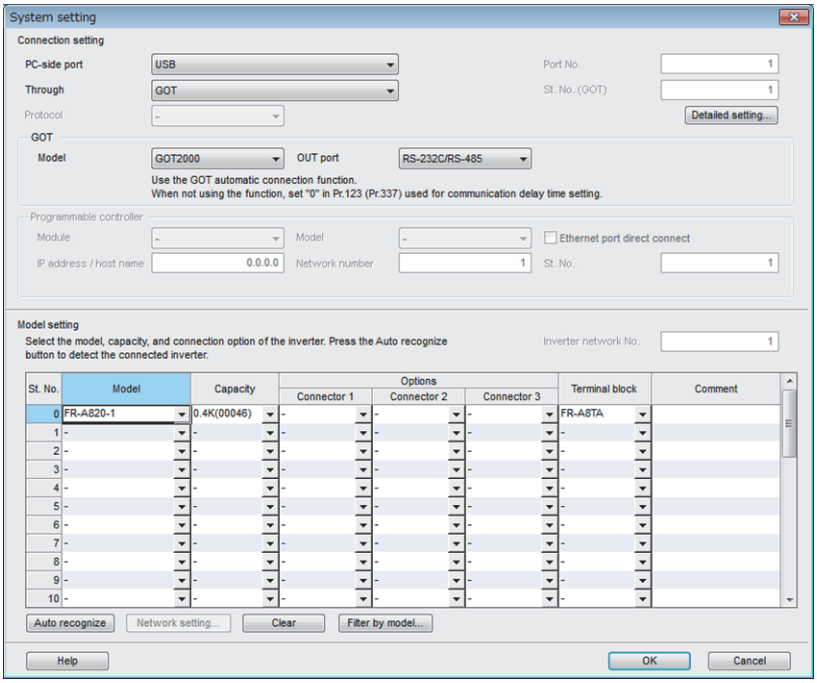

2. Set [Connection setting] in the [System setting] dialog.

- [PC-side port]: [USB]
- [Through]: [GOT]

3. Set [GOT].

- [Model]: [GOT2000]
- [OUT port]: [RS-232C/RS-485]

4. Set [Model setting].

- [Model]: Model of the inverter to be connected

5. Click [OK] to complete the setting.

■USB connection between the GOT and personal computer, Ethernet connection between the GOT and inverter

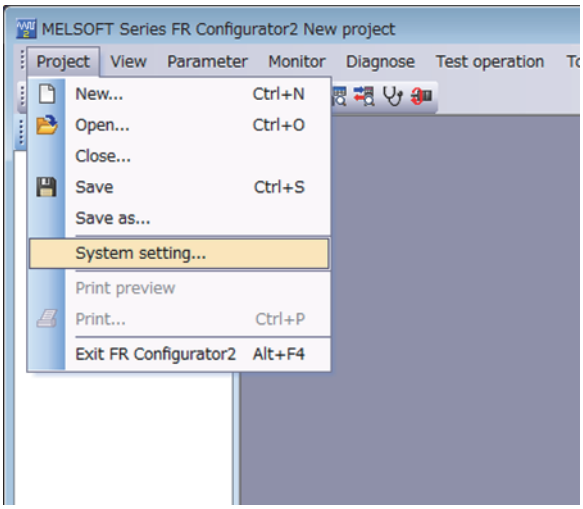

1. Click [Project] → [System setting] in FR Configurator2 to display the [System setting] dialog.

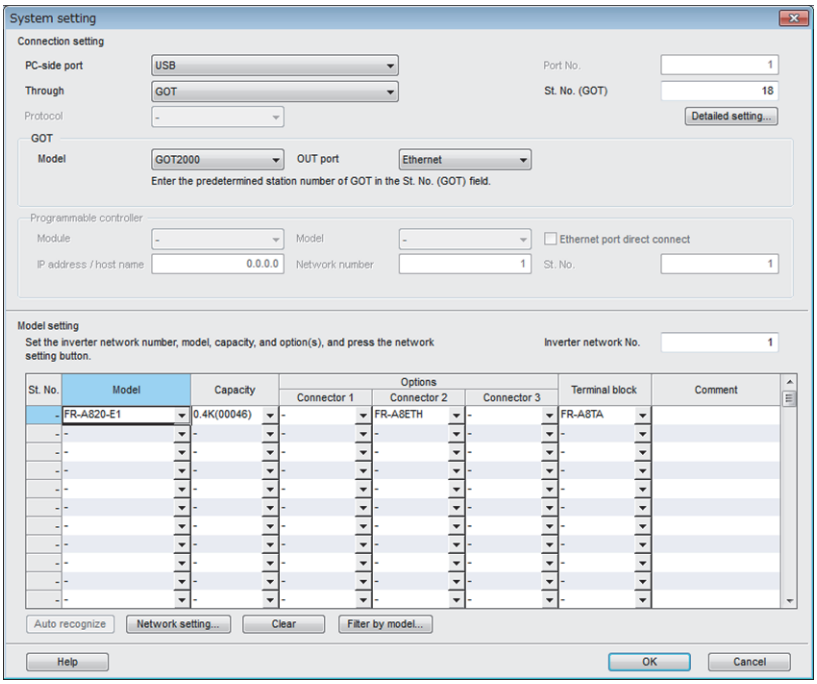

2. Set [Connection setting] in the [System setting] dialog.

- [PC-side port]: [USB]
- [Through]: [GOT]
- [St. No. (GOT)]: Station number of the GOT to be used

3. Set [GOT].

- [Model]: [GOT2000]
- [OUT port]: [Ethernet]

4. Set [Model setting].

- [Inverter network No.]: Network No. of the inverter to be connected
- [Model]: Model of the inverter to be connected

5. Click the [Network setting] button to display the [Network setting] dialog.

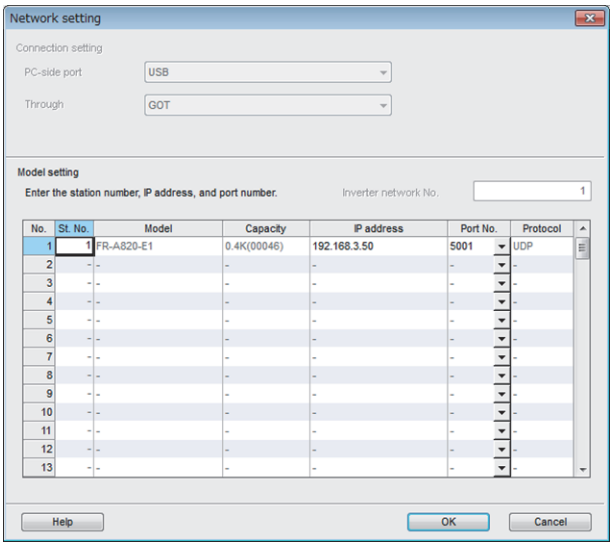

6. Configure [Model setting] in the [Network setting] dialog, and click [OK].

- [St. No.]: Station number of the inverter to be connected
- [IP address]: IP address of the inverter to be connected
- [Port No.]: Port number of the inverter to be connected

7. Click [OK] in the [System setting] dialog to complete the settings.

■Connecting the GOT and a personal computer in an Ethernet connection, and the GOT and an inverter in a serial connection

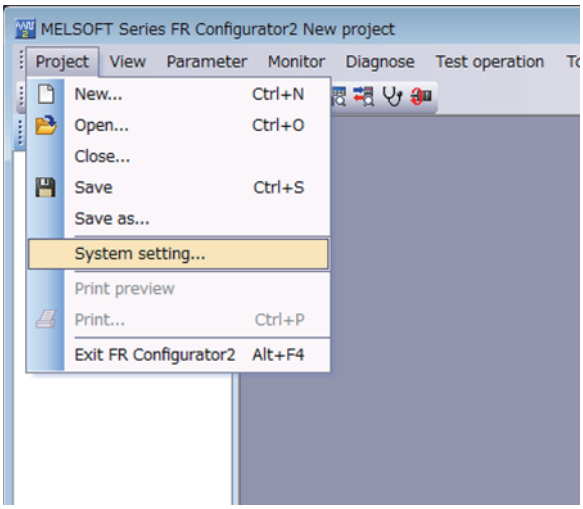

1. Click [Project] → [System setting] in FR Configurator2 to display the [System setting] dialog.

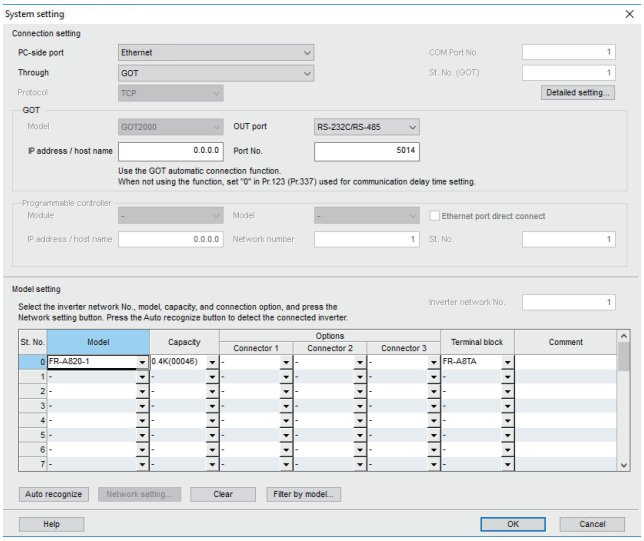

2. Set [Connection setting] in the [System setting] dialog.

- [PC-side port]: [Ethernet]
- [Through]: [GOT]

3. Set [GOT].

- [OUT port]: [RS-232C/RS-485]
- [IP address / host name]: IP address assigned to the GOT
- [Port No.]: [5014]

4. Set [Model setting].

- [Model]: Model of the inverter to be connected

5. Click [OK] to complete the setting.

■Ethernet connection between the GOT and personal computer, Ethernet connection between the GOT and inverter

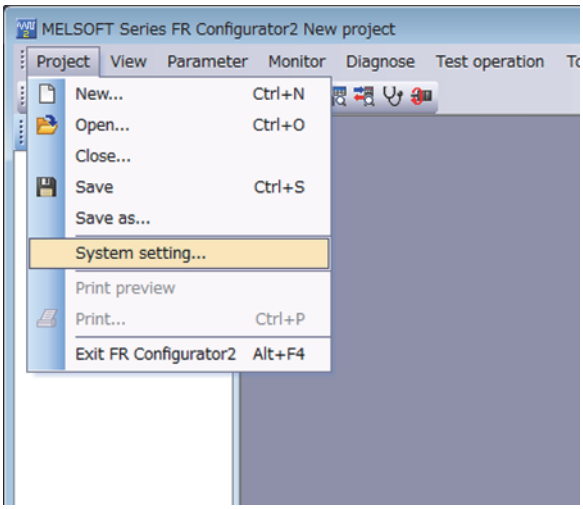

1. Click [Project] → [System setting] in FR Configurator2 to display the [System setting] dialog.

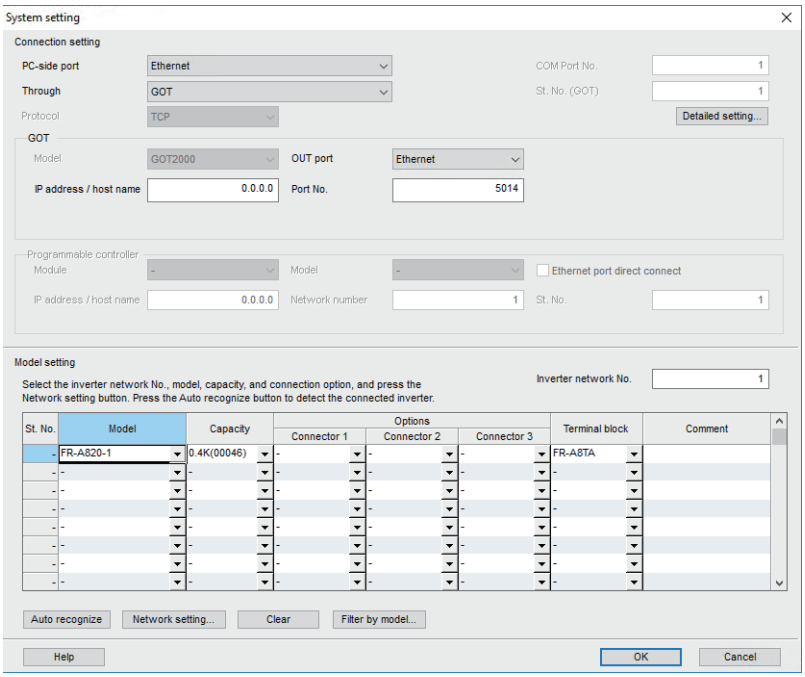

2. Set [Connection setting] in the [System setting] dialog.

- [PC-side port]: [Ethernet]
- [Through]: [GOT]

3. Set [GOT].

- [IP address / host name]: IP address assigned to the GOT
- [Port No.]: [5014]

4. Set [Model setting].

- [Inverter network No.]: Network No. of the inverter to be connected
- [Model]: Model of the inverter to be connected

5. Click the [Network setting] button to display the [Network setting] dialog.

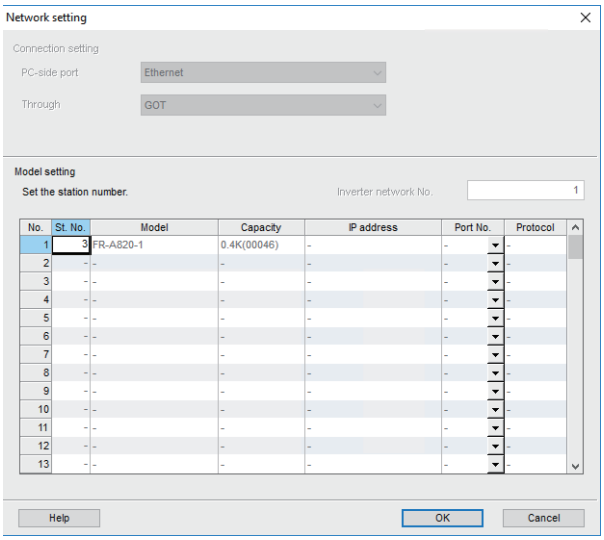

6. Configure [Model setting] in the [Network setting] dialog, and click [OK].

- [St. No.]: Station number of the inverter to be connected

7. Click [OK] in the [System setting] dialog to complete the settings.

When connecting the GOT and inverter via a PLC

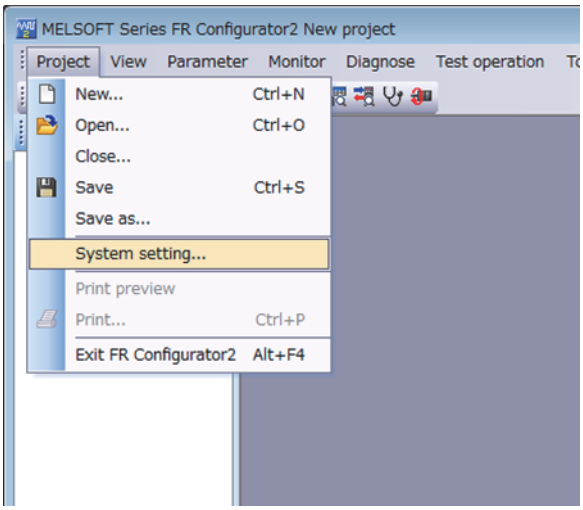

1. Click [Project] → [System setting] in FR Configurator2 to display the [System setting] dialog.

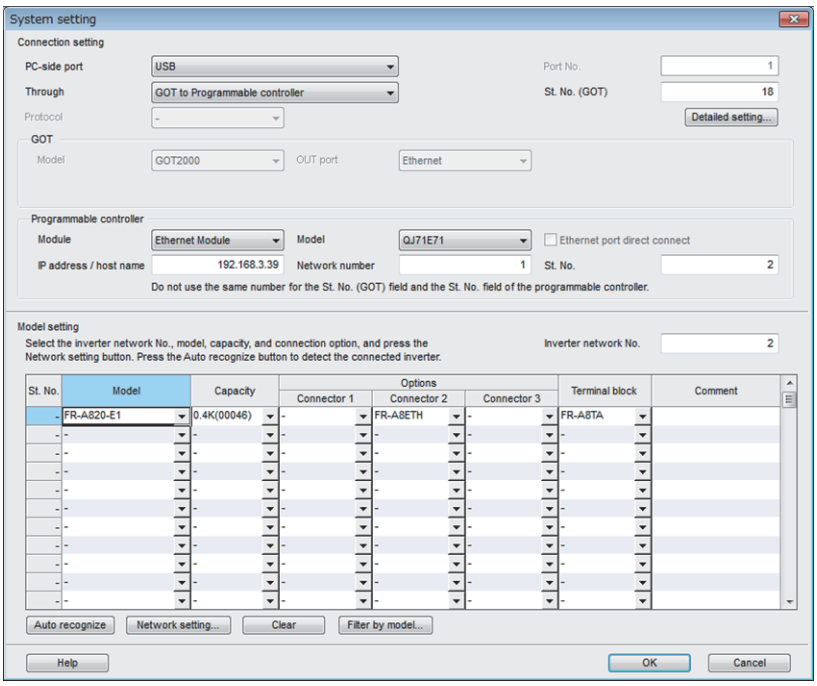

2. Set [Connection setting] in the [System setting] dialog.

- [PC-side port]: [USB]
- [Through]: [GOT to Programmable controller]
- [St. No. (GOT)]: Station number of the GOT to be used

3. Set [Programmable controller].

- [Module]: Type of the PLC module that relays the GOT and inverter
- [Model]: Model of the PLC module that relays the GOT and inverter
- [IP address / host name]: IP address/host name of the PLC module that relays the GOT and inverter
- [Network number]: Network No. of the PLC module that relays the GOT and inverter
- [St. No.]: Station number of the PLC module that relays the GOT and inverter

4. Set [Model setting].

- [Inverter network No.]: Network No. of the inverter to be connected
- [Model]: Model of the inverter to be connected

5. Click the [Network setting] button to display the [Network setting] dialog.

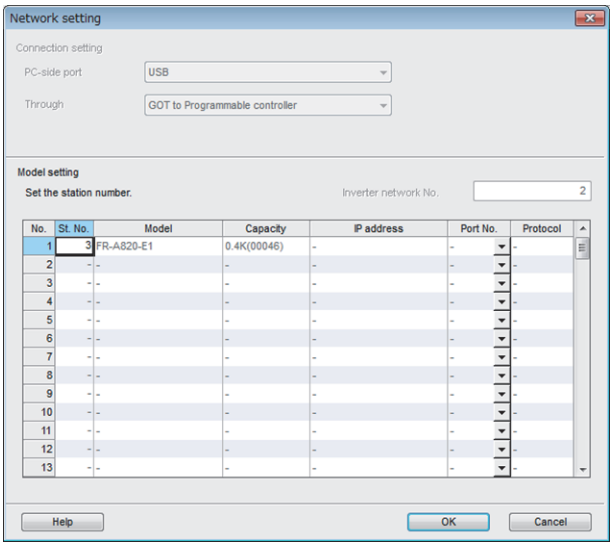

6. Configure [Model setting] in the [Network setting] dialog, and click [OK].

- [St. No.]: Station number of inverter to be connected

7. Click [OK] in the [System setting] dialog to complete the settings.

Accessing PLC by FX Configurator-FP

This section explains the procedure for setting the FA transparent function of FR Configurator2 with an example of connecting to the FREQROL E700/A800/F800 series.

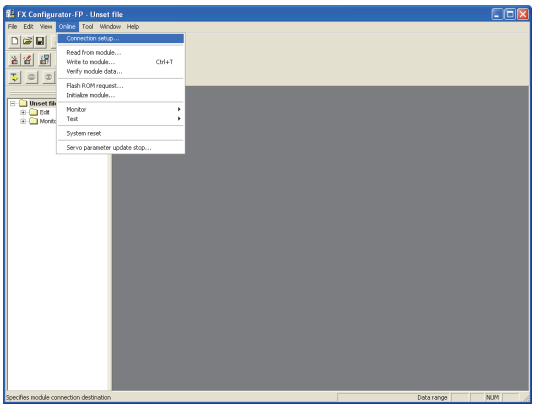

1. Click [Connection setup] for [Online] on FX Configurator-FP.

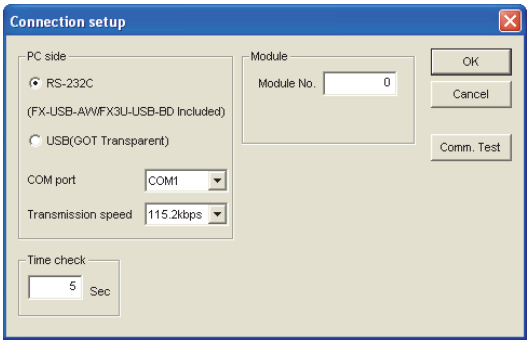

2. Select [USB (GOT Transparent)] in [PC side].

3. Click [Comm. Test].

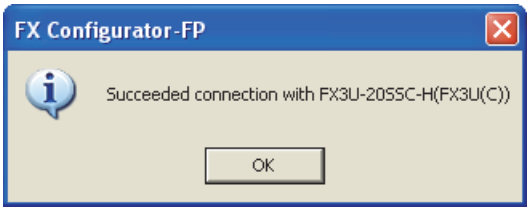

4. After the communication test is completed, check that the GOT is correctly connected to the FXCPU.

Accessing by FX Configurator-EN-L or FX Configurator-EN

This section explains how to set the FA transparent function using FX Configurator-EN-L or FX Configurator-EN.
The following shows FX Configurator-EN-L as an example.

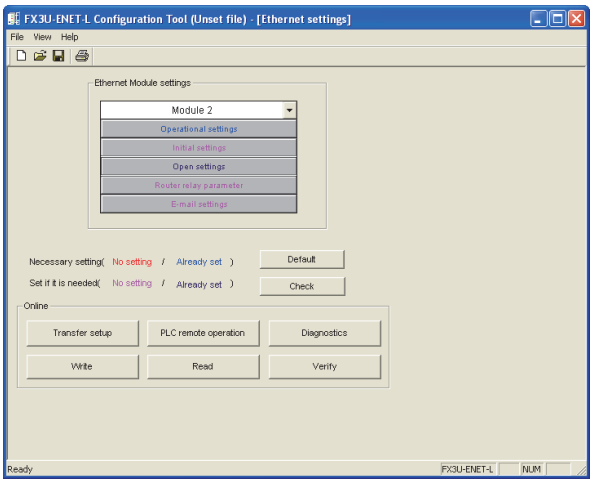

1. Click [Transfer setup] on the FX Configurator-EN-L.

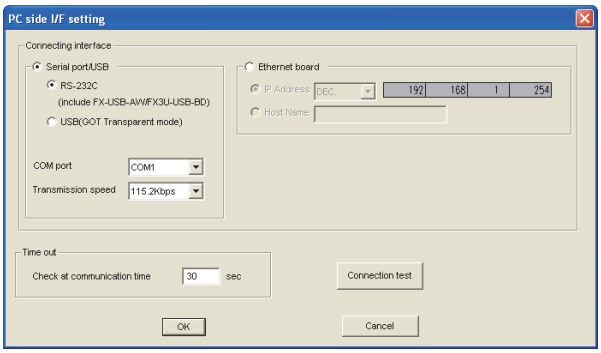

2. Select [USB (GOT Transparent mode)] in [Serial port/USB] of [Connecting interface].

3. Click [Connection test]

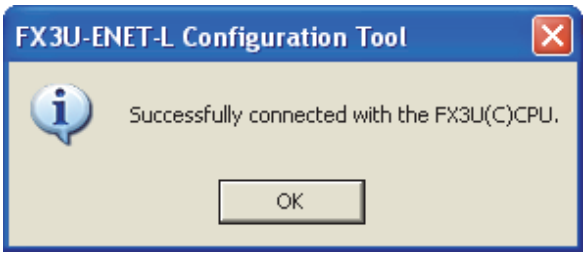

4. After the communication test is completed, check that the GOT is correctly connected to the FXCPU.

Accessing by RT ToolBox3

The following shows the procedure to set the FA transparent function of RT ToolBox3.

CR800-R Series

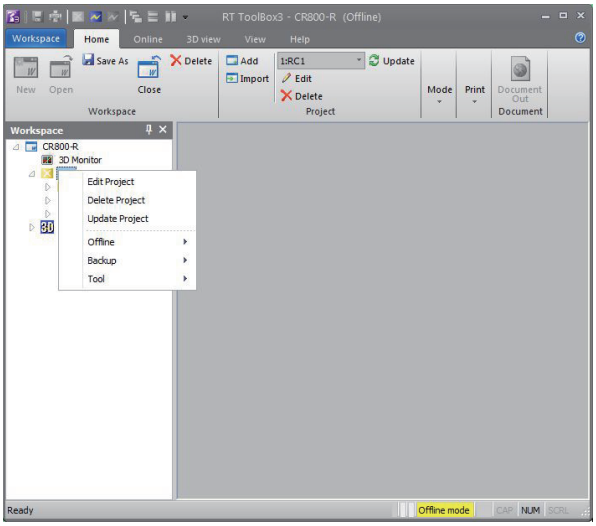

1. Right-click a project name to be a target on the workspace of RT ToolBox3, and click [Edit Project] to display the [Edit Project] dialog.

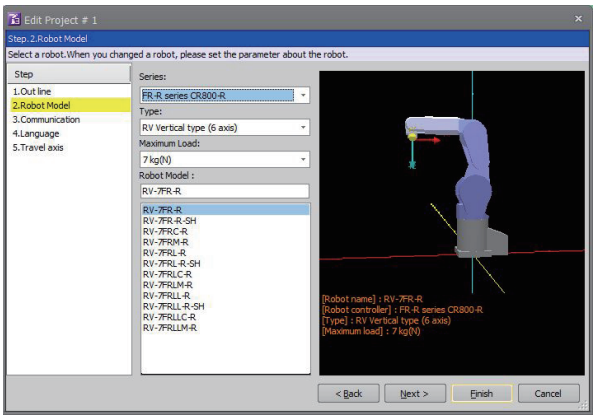

2. Click the [Next] button.

3. Set the following item, and click the [Next] button.

- [Series]: [FR-R series CR800-R]

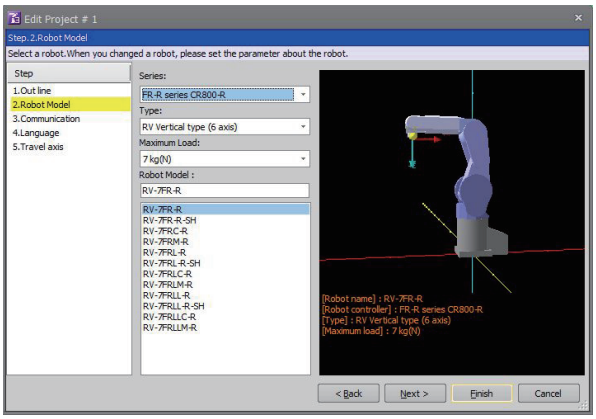

4. Set the following item, and click the [Detail] button to display the [CRnQ_R Communication Setting] dialog.

- [Method]: [CRnQ_R]

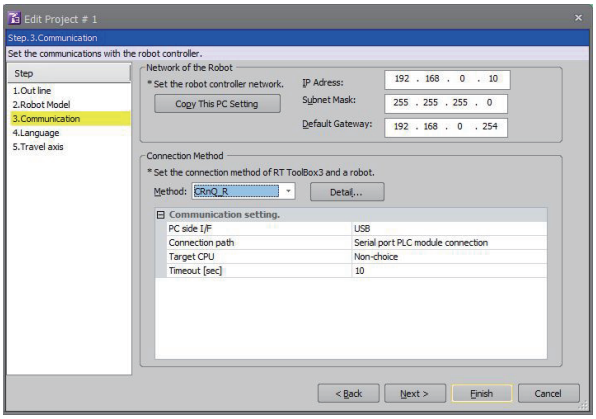

5. Set the following item, and click the [Detail] button to display the [CRnQ_R Communication Detail Setting] dialog.

- [Serial Port]: [USB]

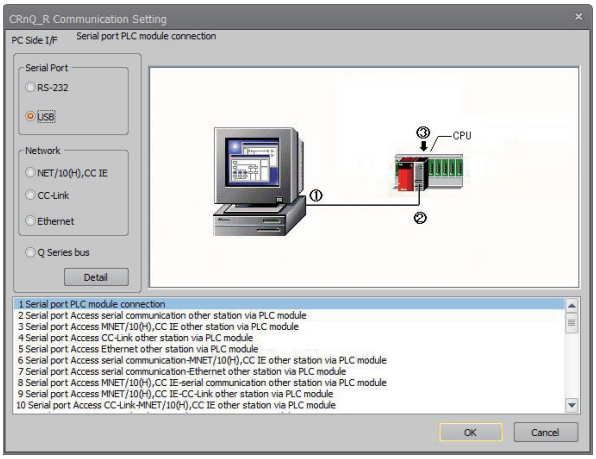

6. Select [via GOT(Ethernet) transparent mode] in [(2)PLC Side I/F Setting of PLC Module].

Select the transparent target controller in [(3)Target CPU] as necessary.

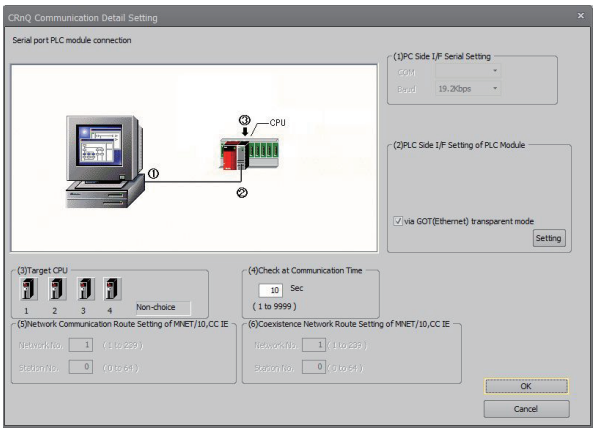

7. Click the [Setting] button to display the [GOT (Ethernet) Transparent Setting] dialog.

8. Set the following according to the interface of the controller.

- When connecting with an Ethernet port built in a PLC CPU

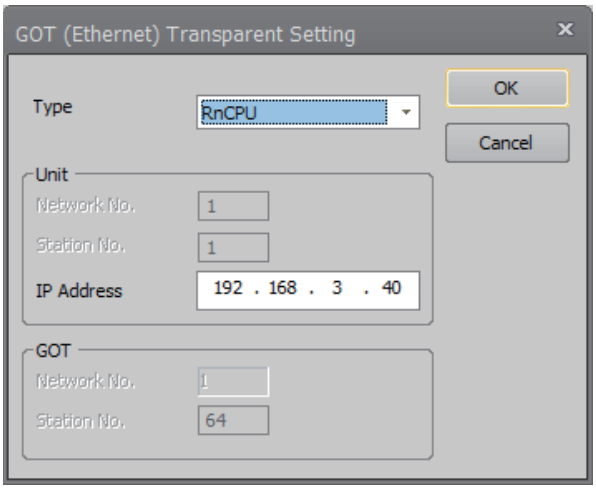

Item		Setting
[Type]		[RnCPU]
[Unit]	[IP Address]	IP address assigned to RnCPU

- When connecting with an Ethernet module

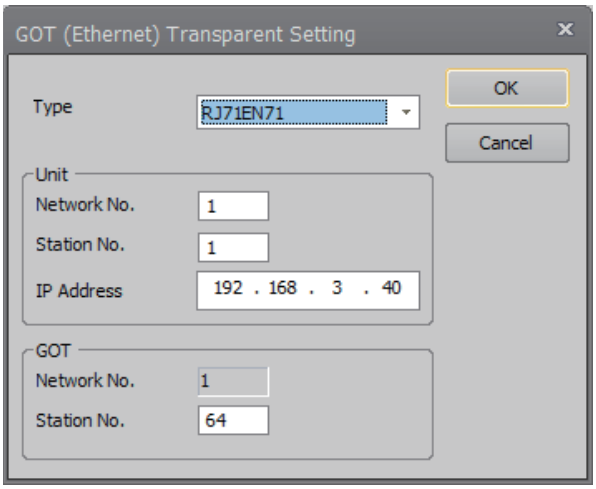

Item		Setting
[Type]		[RJ71EN71]
[Unit]	[Network No.]	Network number assigned to the Ethernet module
	[Station No.]	Station number assigned to the Ethernet module
	[IP Address]	IP address assigned to the Ethernet module
[GOT]	[Station No.]	Station number assigned to the GOT

9. Click the [OK] buttons of the dialogs set at Step 5 to 8 to complete the settings.

10. Click [Finish] in the [Edit Project] dialog to complete the settings.

After completing the settings, change the operation mode to [Online].

Change the operation mode with the GOT and robot controller connected.

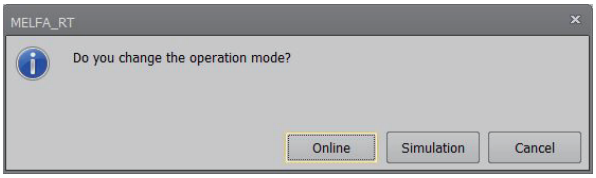

CR800-D Series

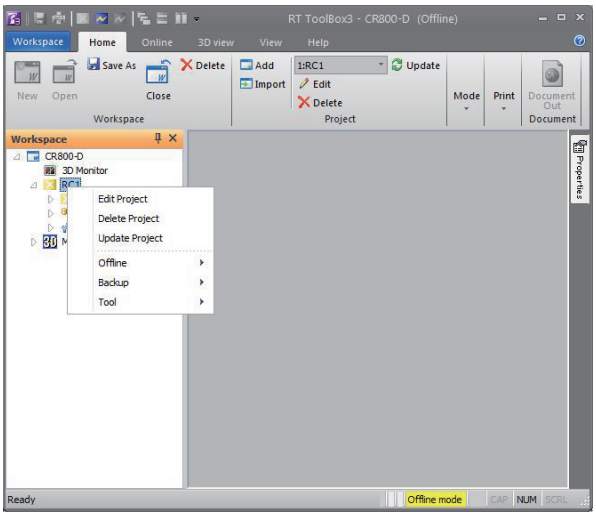

1. Right-click a project name to be a target on the workspace of RT ToolBox3, and click [Edit Project] to display the [Edit Project] dialog.

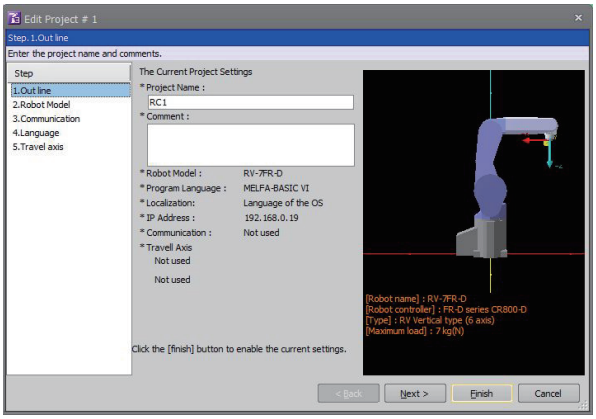

2. Click the [Next] button.

3. Set the following item, and click the [Next] button.

- [Series]: [FR-D series CR800-D]

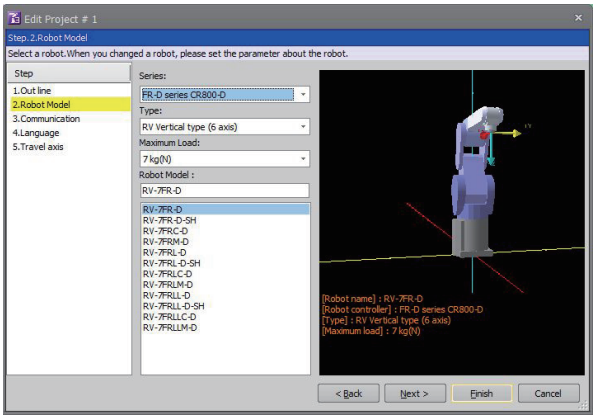

4. Set the following items.

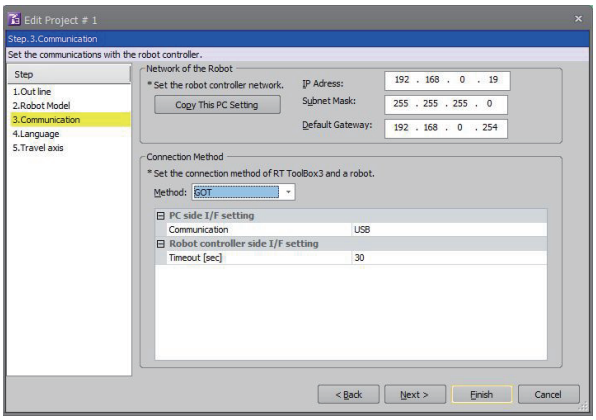

Item		Setting
[Method]		[GOT]
[PC side I/F setting]	[Communication]	[USB]
[Robot controller side I/F setting]	[Timeout [sec]]	Set this item as necessary.

5. Click [Finish] in the [Edit Project] dialog to complete the settings.

After completing the settings, change the operation mode to [Online].

Change the operation mode with the GOT and robot controller connected.

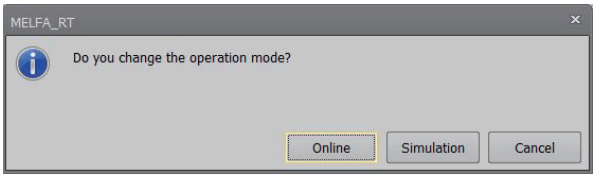

CRnQ-700 Series

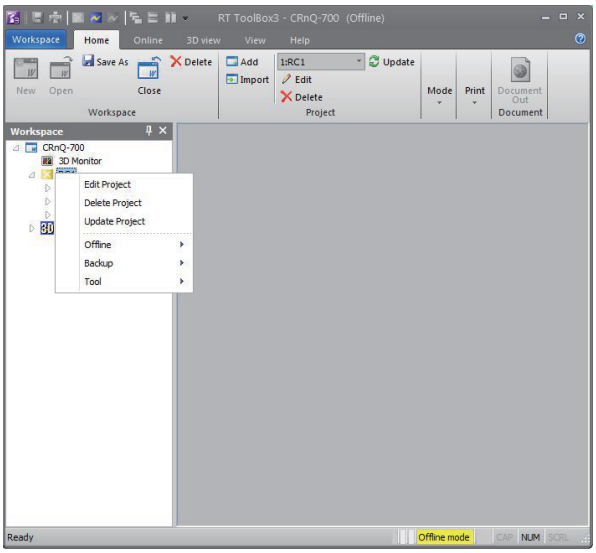

1. Right-click a project name to be a target on the workspace of RT ToolBox3, and click [Edit Project] to display the [Edit Project] dialog.

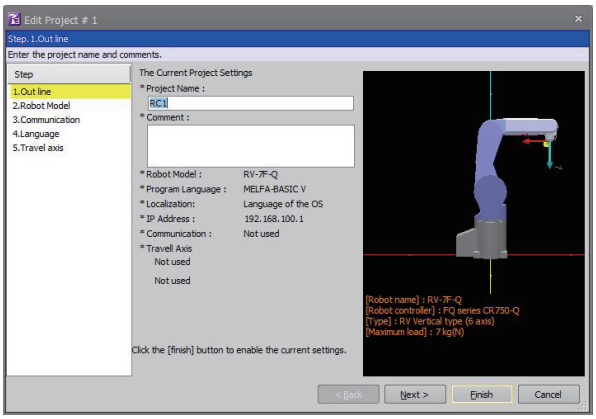

2. Click the [Next] button.

3. Set the following item, and click the [Next] button.

- [Series]: [FQ series CR750-Q]

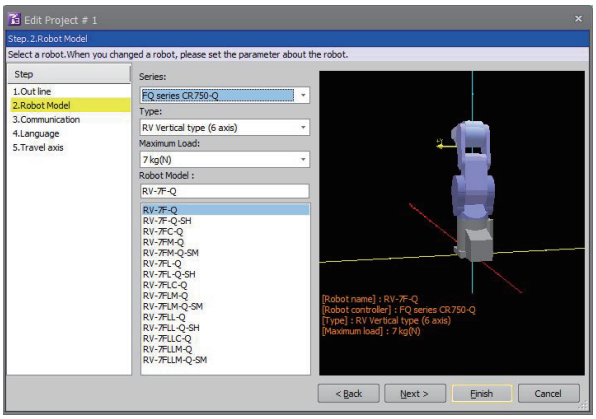

4. Set the following item, and click the [Detail] button to display the [CRnQ_R Communication Setting] dialog.

- [Method]: [CRnQ_R]

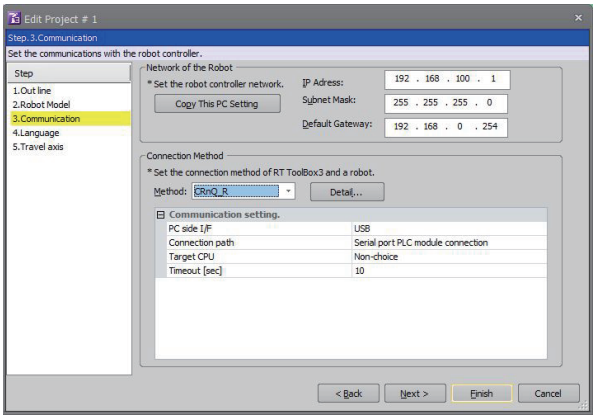

5. Set the following item, and click the [Detail] button to display the [CRnQ_R Communication Detail Setting] dialog.

- [Serial Port]: [USB]

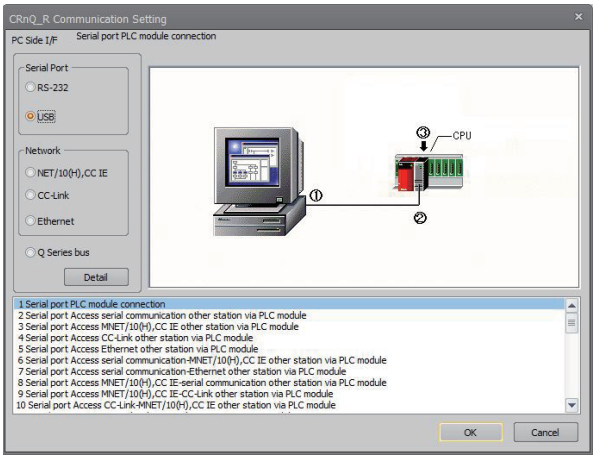

6. Select either of the following in [(2)PLC Side I/F Setting of PLC Module].

[via GOT(Bus) transparent mode]

[via GOT(direct coupled) transparent mode]

[via GOT(Ethernet) transparent mode]

Here, select [via GOT(Ethernet) transparent mode].

Select the transparent target controller in [(3)Target CPU] as necessary.

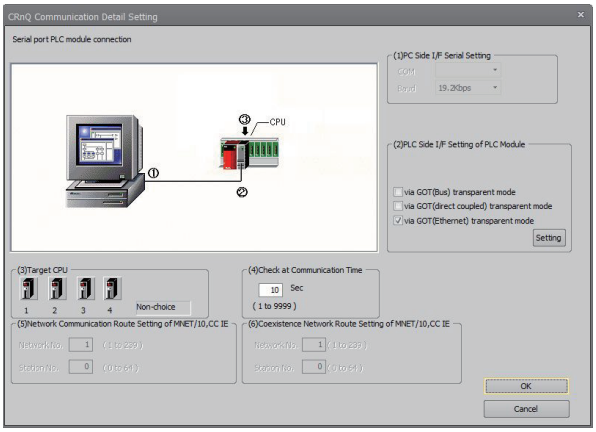

7. Click the [Setting] button to display the [GOT (Ethernet) Transparent Setting] dialog.

8. Set the following according to the interface of the controller.

- When connecting with an Ethernet port built in a PLC CPU

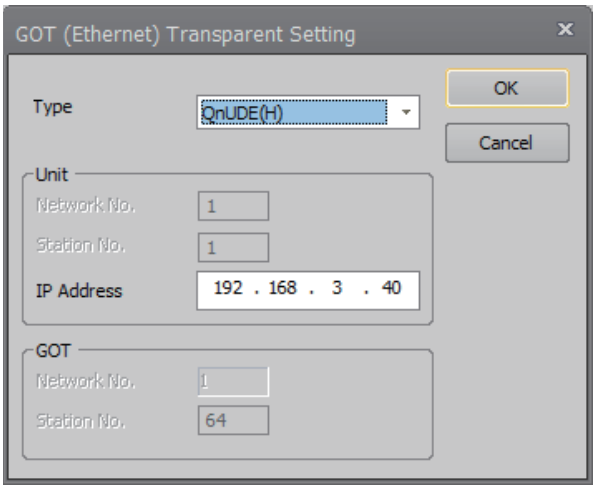

Item		Setting
[Type]		[QnUDE(H)]
[Unit]	[IP Address]	IP address assigned to QnUDE(H)

- When connecting with an Ethernet module

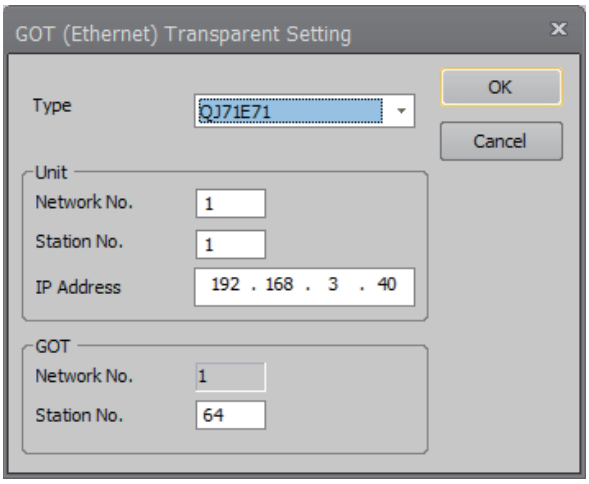

Item		Setting
[Type]		[QJ71E71]
[Unit]	[Network No.]	Network number assigned to the Ethernet module
	[Station No.]	Station number assigned to the Ethernet module
	[IP Address]	IP address assigned to the Ethernet module
[GOT]	[Station No.]	Station number assigned to the GOT

9. Click the [OK] buttons of the dialogs set at Step 5 to 8 to complete the settings.

10. Click [Finish] in the [Edit Project] dialog to complete the settings.

After completing the settings, change the operation mode to [Online].

Change the operation mode with the GOT and robot controller connected.

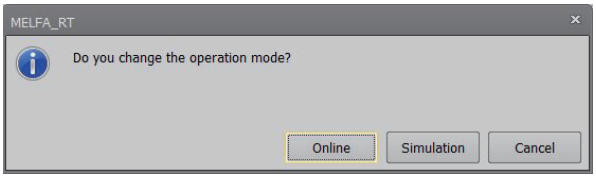

CRnD-700 Series

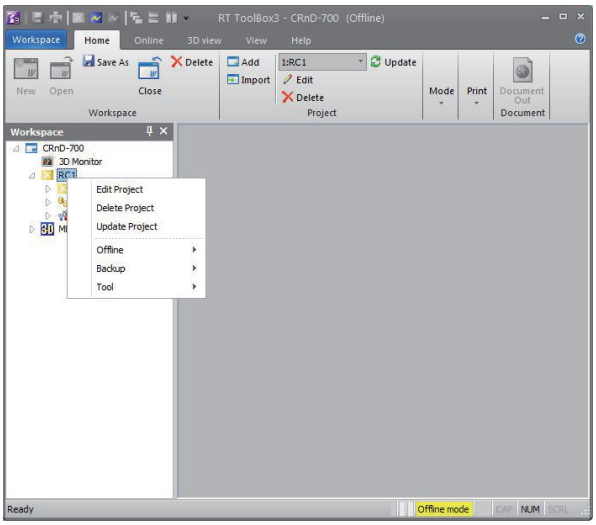

1. Right-click a project name to be a target on the workspace of RT ToolBox3, and click [Edit Project] to display the [Edit Project] dialog.

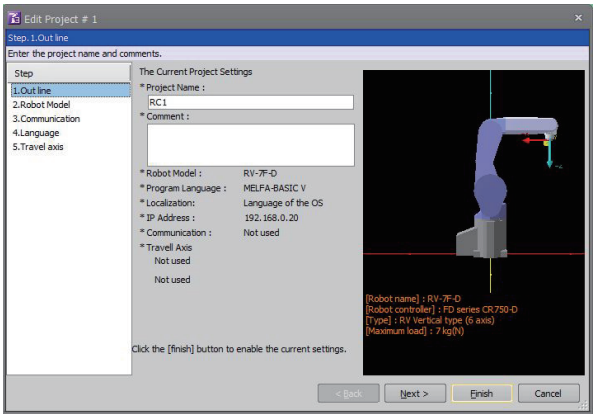

2. Click the [Next] button.

3. Set the following item, and click the [Next] button.

- [Series]: [FD series CR750-D]

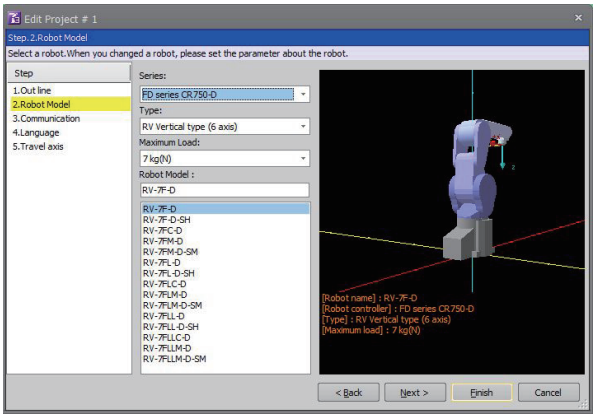

4. Set the following items.

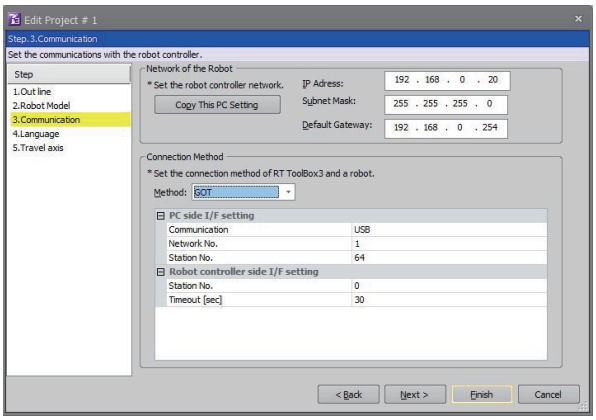

Item		Setting
[Method]		[GOT]
[PC side I/F setting]	[Communication]	[USB]
	[Network No.]	Network number assigned to the GOT
	[Station No.]	Station number assigned to the GOT
[Robot controller side I/F setting]	[Station No.]	Station number assigned to the robot controller
	[Timeout [sec]]	Set this item as necessary.

5. Click [Finish] in the [Edit Project] dialog to complete the settings.

After completing the settings, change the operation mode to [Online].

Change the operation mode with the GOT and robot controller connected.

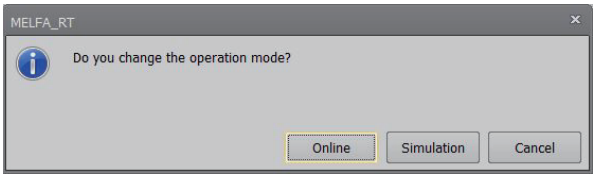

CR800-Q Series

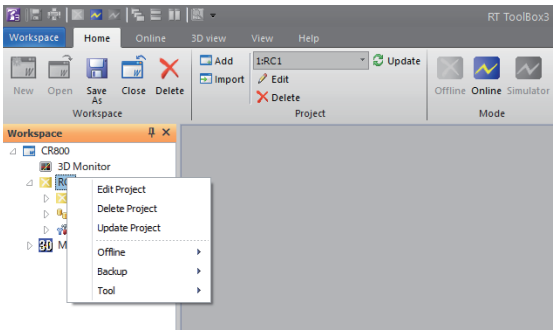

1. Right-click a project name to be a target on the workspace of RT ToolBox3, and click [Edit Project] to display the [Edit Project] dialog.

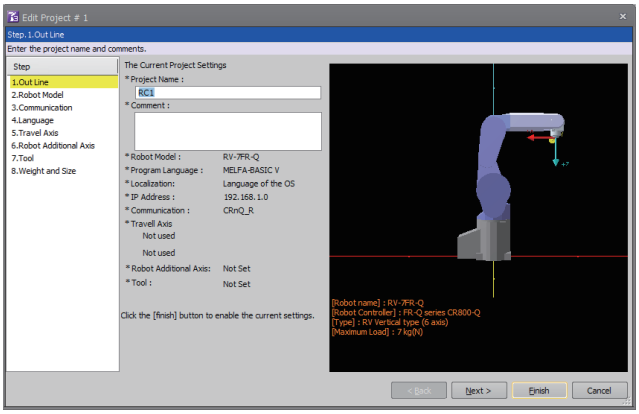

2. Click the [Next] button.

3. Set the following item, and click the [Next] button.

- [Series]: [FR-Q series CR800-Q]

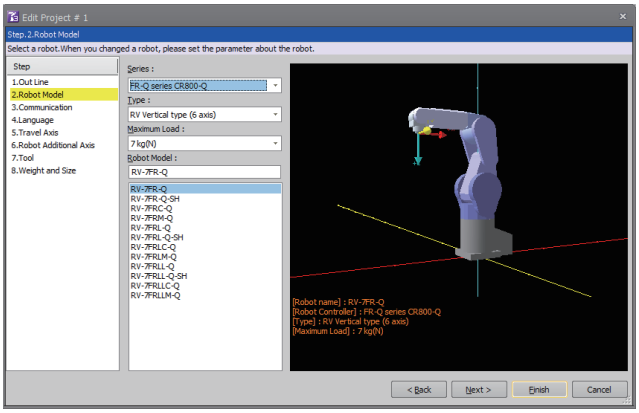

4. Set the following item, and click the [Detail] button to display the [CRnQ_R Communication Setting] dialog.

- [Method]: [CRnQ_R]

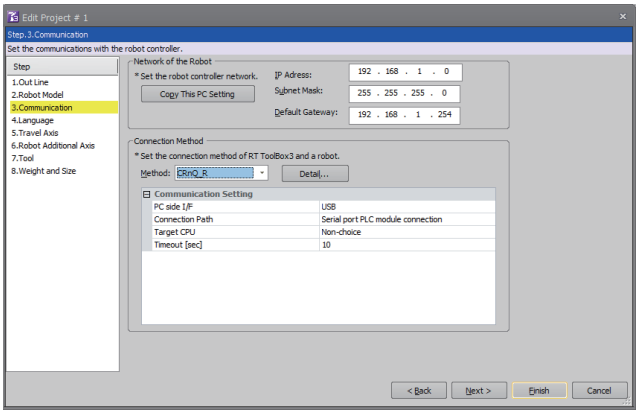

5. Set the following item, and click the [Detail] button to display the [CRnQ_R Communication Detail Setting] dialog.

- [Serial Port]: [USB]

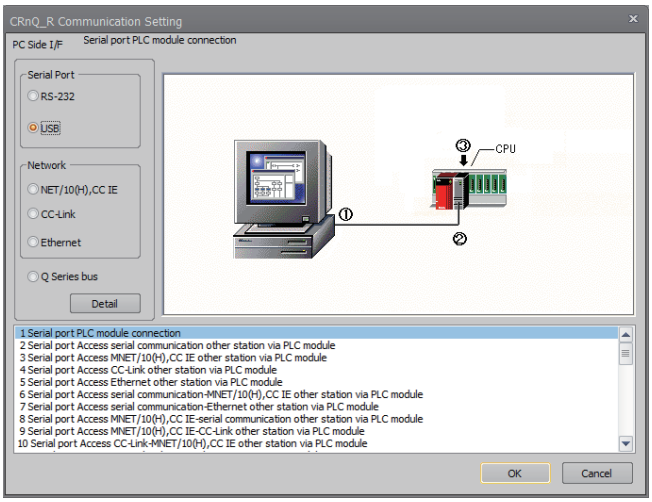

6. Select either of the following in [(2)PLC Side I/F Setting of PLC Module].

- [via GOT(Bus) transparent mode]
- [via GOT(direct coupled) transparent mode]
- [via GOT(Ethernet) transparent mode]

Here, select [via GOT(Ethernet) transparent mode].

Select the transparent target controller in [(3)Target CPU] as necessary.

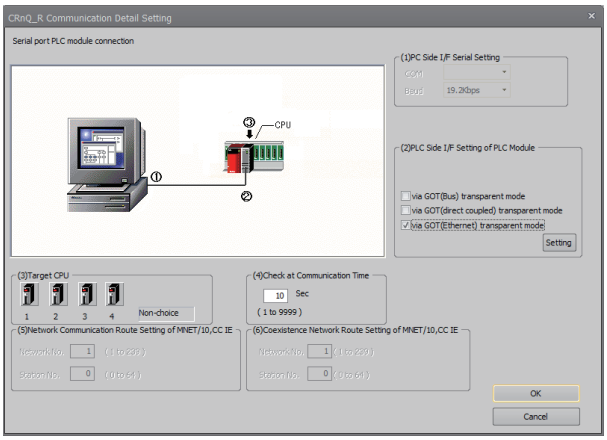

7. Click the [Setting] button to display the [GOT (Ethernet) Transparent Setting] dialog.

8. Set the following according to the interface of the controller.

- When connecting with an Ethernet port built in a PLC CPU

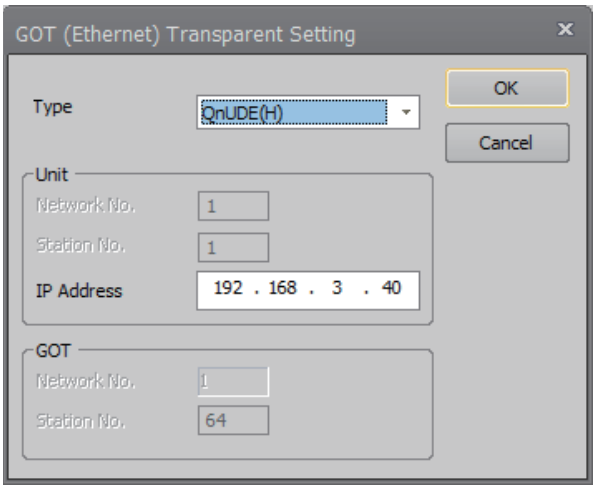

Item		Setting
[Type]		[QnUDE(H)]
[Unit]	[IP Address]	IP address assigned to QnUDE(H)

- When connecting with a PERIPHERAL I/F of CR800-Q (Q172DSRCPU) or Ethernet module

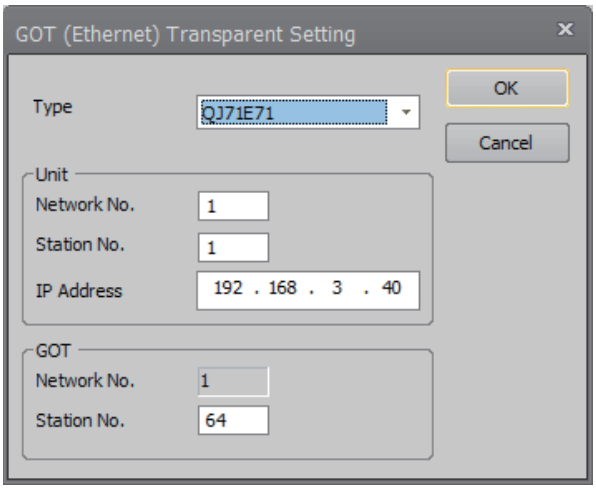

Item		Setting
[Type]		[QJ71E71]
[Unit]	[Network No.]	Arbitrary network number
	[Station No.]	Arbitrary station number
	[IP Address]	IP address assigned to the Ethernet module
[GOT]	[Station No.]	Station number assigned to the GOT

9. Click the [OK] buttons of the dialogs set at Step 5 to 8 to complete the settings.

10. Click [Finish] in the [Edit Project] dialog to complete the settings.

After completing the settings, change the operation mode to [Online].

Change the operation mode with the GOT and robot controller connected.

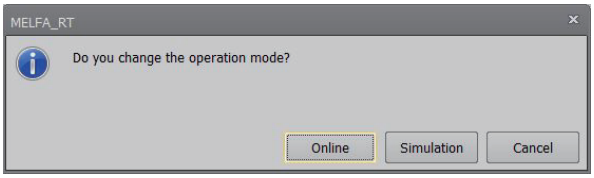

Accessing by RT ToolBox2

This section explains the procedure to set the FA transparent function of RT ToolBox2 with an example of connecting to CRnQ-700.

Connecting the GOT and Controller in bus connection or direct CPU connection (serial) (CRnQ-700 only)

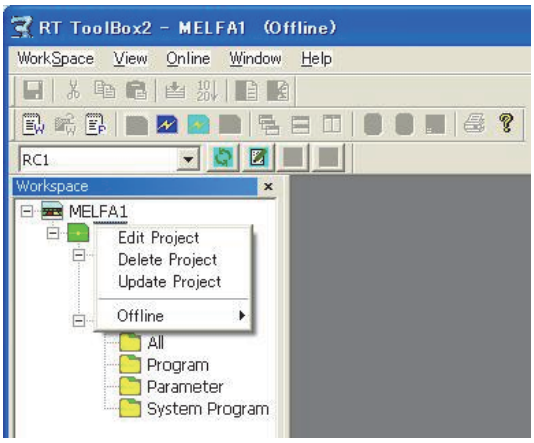

1. Right-click a project name to be a target on the project tree of RT ToolBox2.
Click [Edit Project].

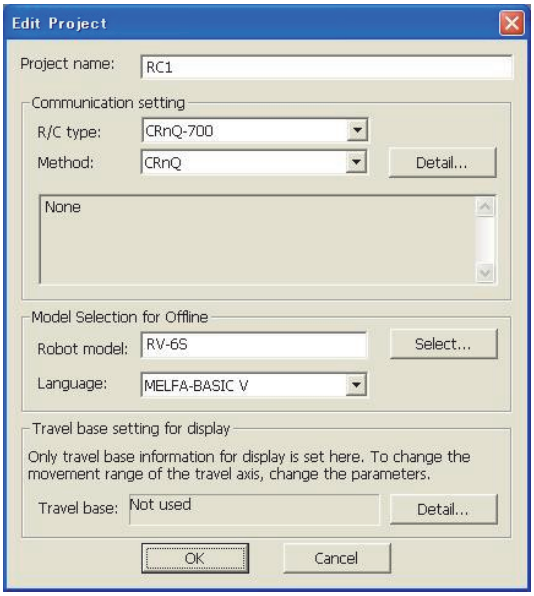

2. Set [Method] to [CRnC].

3. Click [Detail].

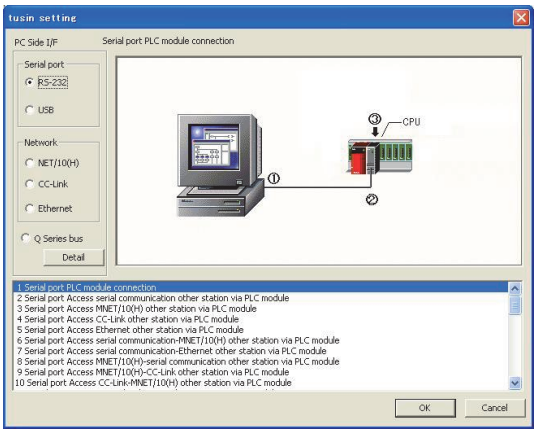

4. Select [USB] in [Serial port].

5. Click [Detail].

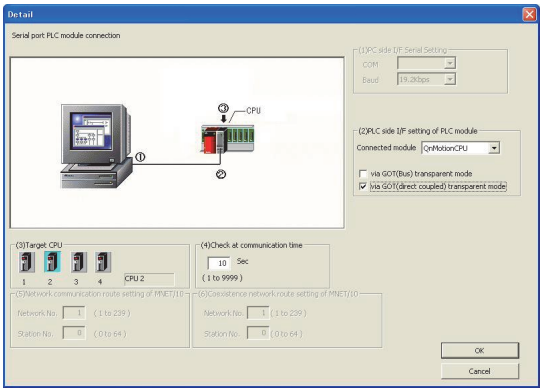

6. Check-mark either of the following in [PLC side I/F setting of PLC module].

Bus connection

[via GOT(Bus) transparent mode]

Direct CPU connection (serial)

[via GOT(direct coupled) transparent mode]

7. As necessary, select a CPU that is targeted in [CPU].

Connecting the GOT and Controller in Ethernet connection

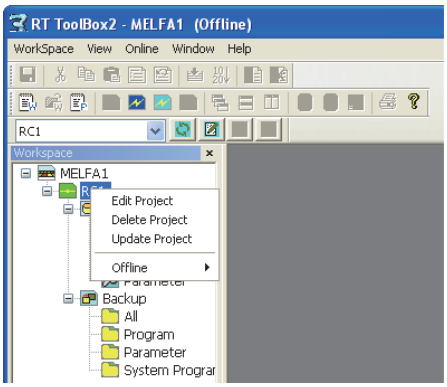

1. Right-click a project name to be a target on the project tree of RT ToolBox2.

Click [Edit Project].

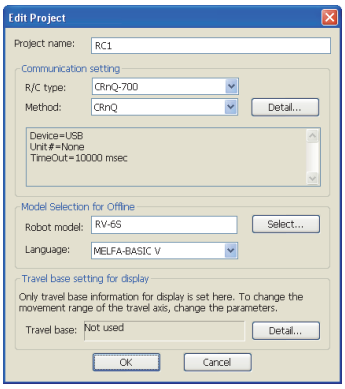

2. Set [Method] to [CRnQ].

3. Click [Detail].

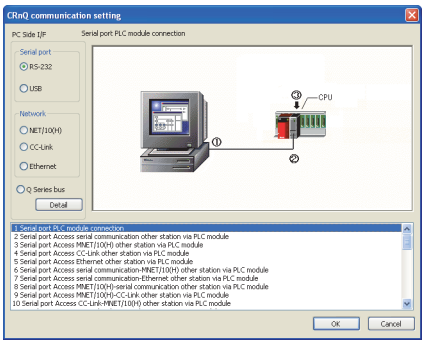

4. Select [USB] in [Serial port].

5. Click [Detail].

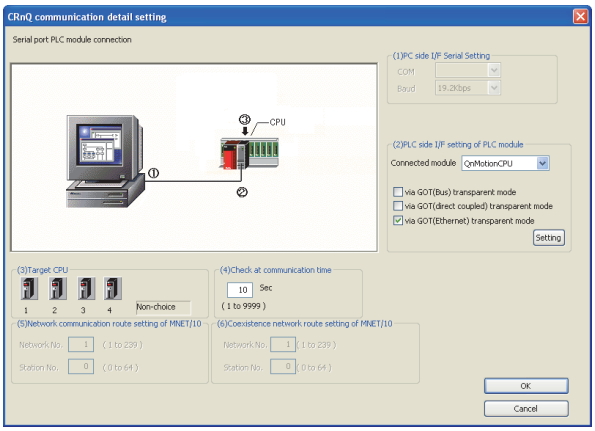

6. On the [PLC side I/F setting of PLC module], mark the [via GOT (Ethernet) transparent mode] checkbox and click [Set].

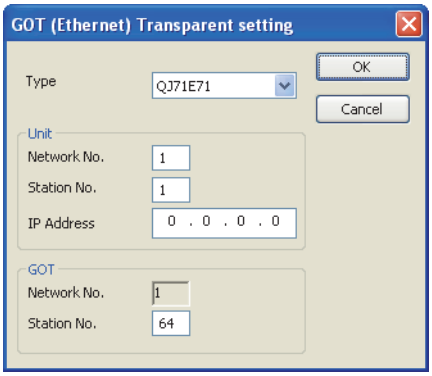

7. Set [QJ71E71] for [Type].

8. Specify the number assigned to the Ethernet module for [Network No.], [Station No.] and [IP Address] in "Module side".

9. Specify the number assigned to the GOT for [Network No.], [Station No.] and [IP Address] in "GOT side".

10. As necessary, select a CPU that is targeted in [CPU].

Accessing by NC Configurator2

The following shows the procedure to set the FA transparent function of NC Configurator2.

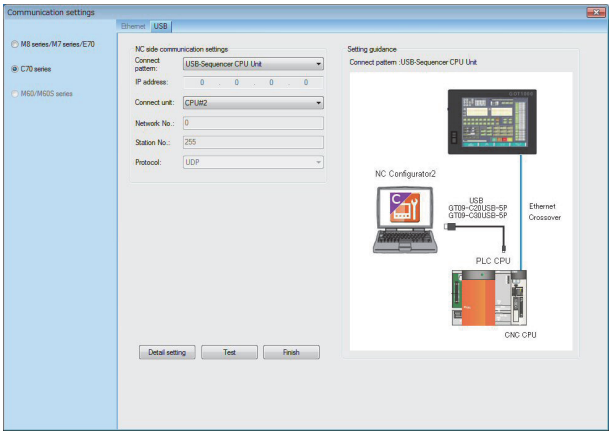

1. Click [Communicate] → [Communication settings] → [C70 series] → [USB].

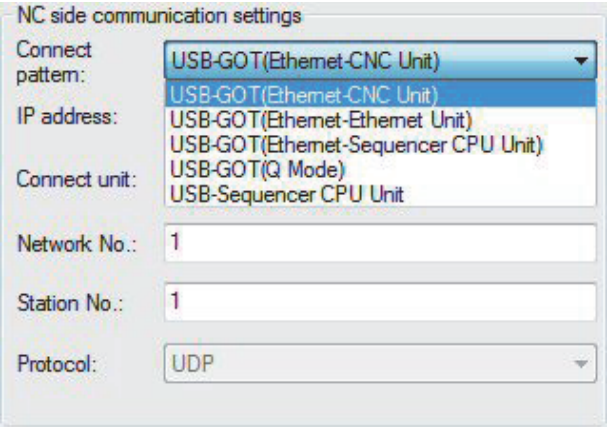

2. Depending on the connect pattern, set one of the following in the [Connect pattern].

- USB-GOT (Ethernet-CNC Unit)
- USB-GOT (Ethernet-Ethernet Unit)
- USB-GOT (Ethernet-Sequencer CPU Unit)
- USB-GOT (Q Mode)

3. Set as necessary [IP address], [Network No.] and [Station No.].

4. check that the GOT is correctly connected to the CNC in [Test].

Accessing by MELSOFT Navigator

This section explains the procedure to set the FA transparent function of the MELSOFT Navigator.

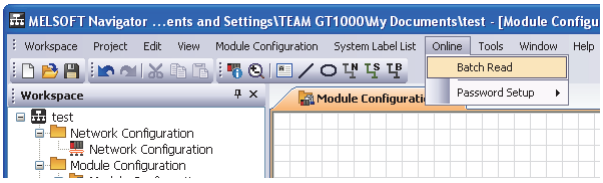

1. Click [Online] → [Batch Read] in MELSOFT Navigator.

2. The [Batch Read] is displayed.

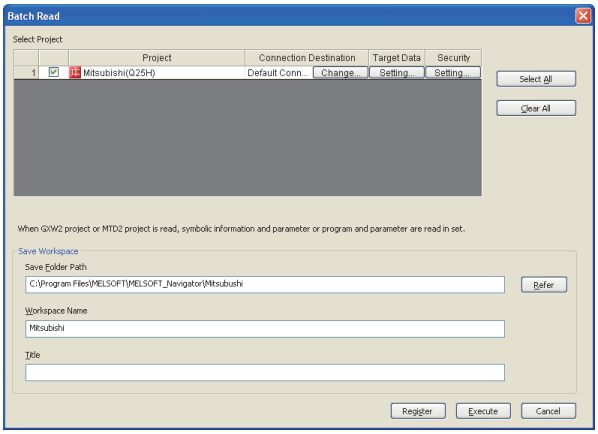

3. Select the projects to be read from [Select Project], and set the storage destination of the workspace in [Save Workspace].

4. Click [Execute] to read and display the specified project.

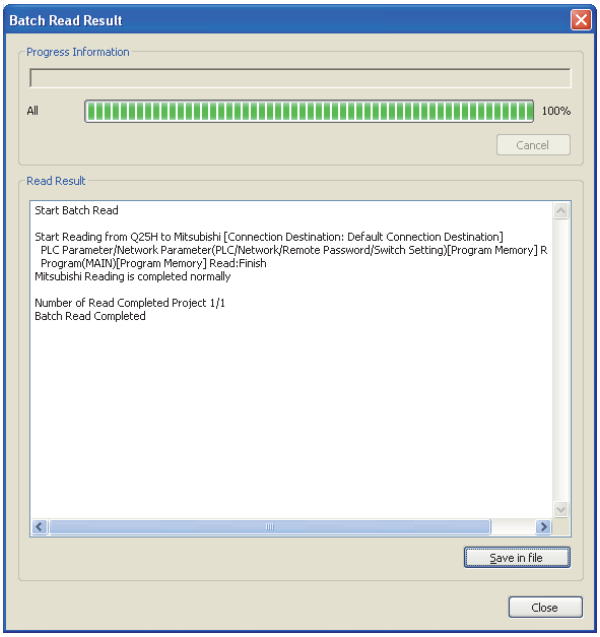

Accessing by CPU Module Logging Configuration Tool

The following shows the procedure to set the FA transparent function of CPU Module Logging Configuration Tool.

When connecting the GOT and the RCPU or FX5CPU

The following shows an example of connection with the RCPU.

■Connecting the GOT and the personal computer by a USB

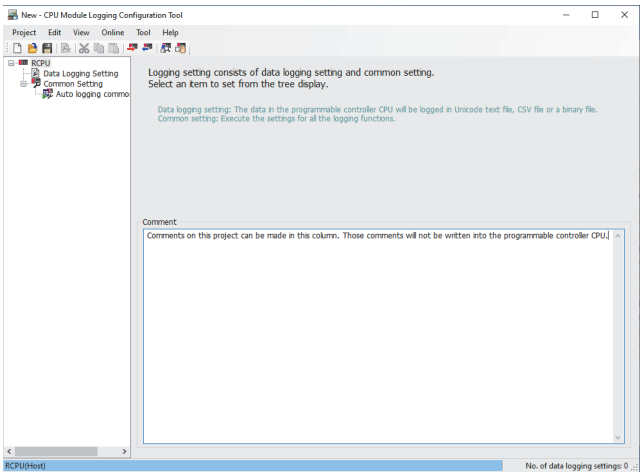

1. Click [Online] → [Transfer Setup] in CPU Module Logging Configuration Tool.

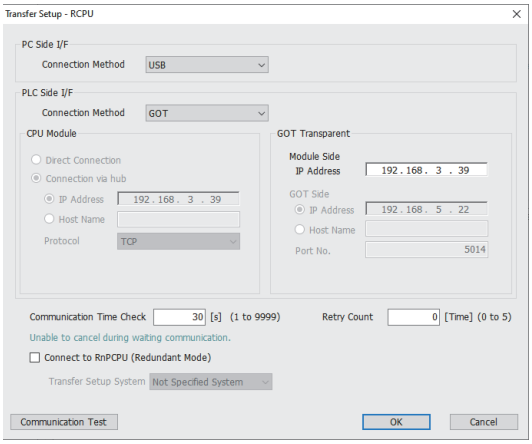

2. Set the following items in the [Transfer Setup] dialog.

- [PC Side I/F]: [USB]
- [PLC Side I/F]: [GOT]

3. Set the following item in [Module Side] in [GOT Transparent].

- [IP Address]: IP address of the PLC

4. Click [OK] to complete the setting.

■Connecting the GOT and the personal computer in an Ethernet connection

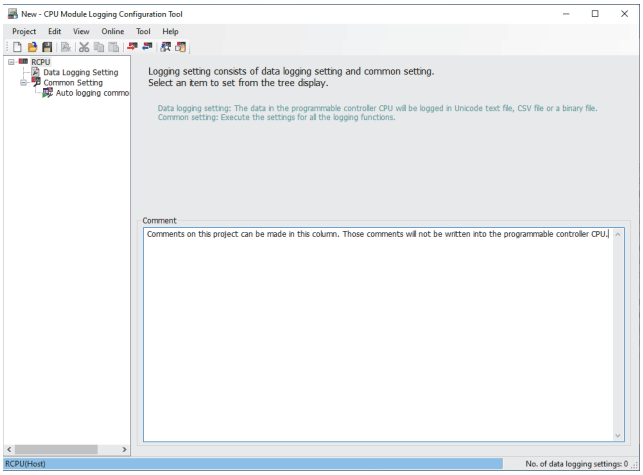

1. Click [Online] → [Transfer Setup] in CPU Module Logging Configuration Tool.

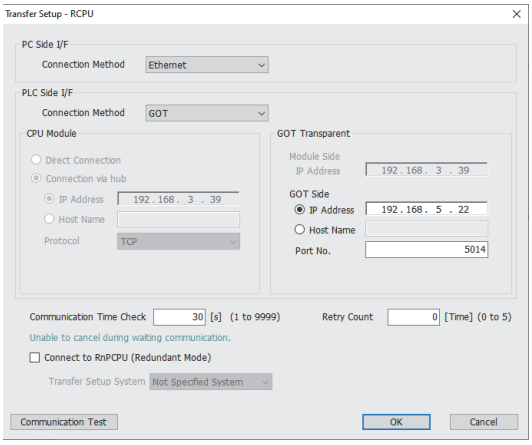

2. Set the following items in the [Transfer Setup] dialog.

- [PC Side I/F]: [Ethernet]
- [PLC Side I/F]: [GOT]

3. Set the following items in [GOT Side] in [GOT Transparent]

Set either [IP Address] or [Host Name].

- [IP Address]: IP address assigned to the GOT
- [Host Name]: Host name assigned to the GOT
- [Port No.]: Port No. for GOT transparent

4. Click [OK] to complete the setting.

When connecting the GOT and the QCPU (Q mode) or LCPU

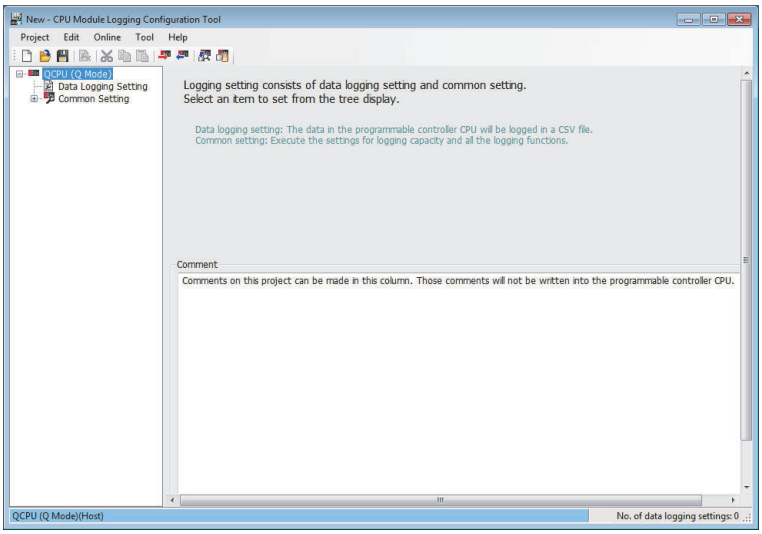

1. Click [Online] → [Transfer Setup...].

2. The [Transfer Setup] is displayed.

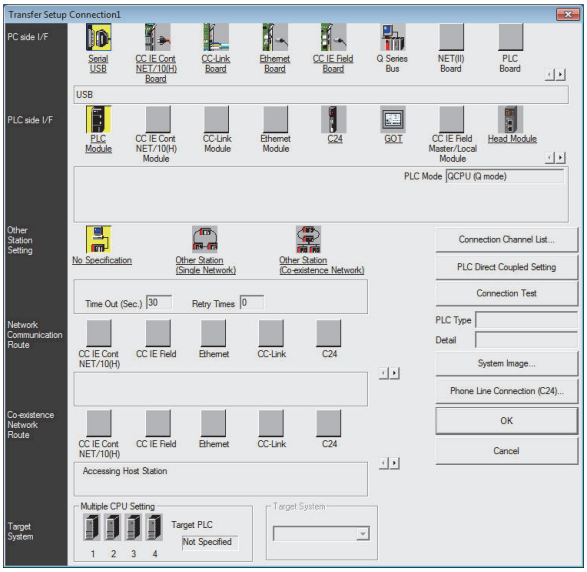

3. Set the [Transfer Setup]:

PC side I/F : Serial USB

PLC side I/F : GOT

Other Station Setting : No specification

4. Set [PC side I/F Serial Setting] and [PLC side I/F Detailed Setting of GOT] in [Transfer Setup]. For details, refer to the following.

☞ Page 1282 Accessing by GX Works2

Accessing by Setting/ Monitoring tool for C Controller module

The following shows the procedure to set the FA transparent function of Setting/Monitoring tool for C Controller module (Q Series) with the C Controller module (Q24DHCCPU-V) connected.

When connecting the GOT and personal computer with USB

■When connecting the GOT and PLC in bus connection

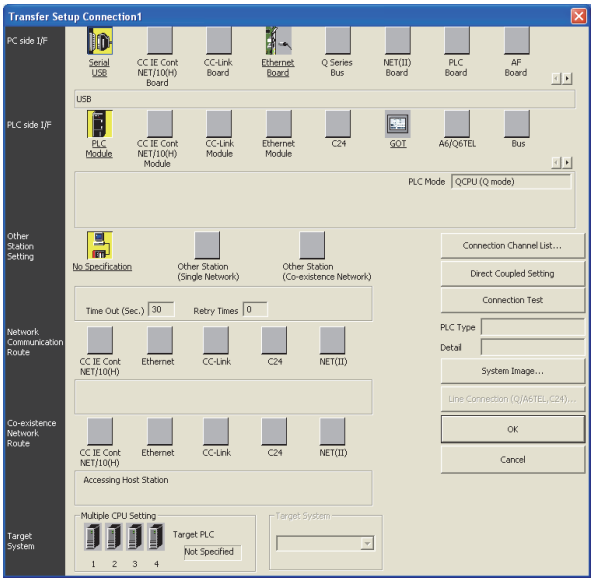

1. Click the Connection Destination view → [Connection Destination] → [(Connection target data name)] in the Navigation window of MT Setting/Monitoring tool for C Controller module.
2. The [Transfer Setup] is displayed.
3. Set the [Transfer Setup]:

PLC side I/F : GOT

Other station : No specification

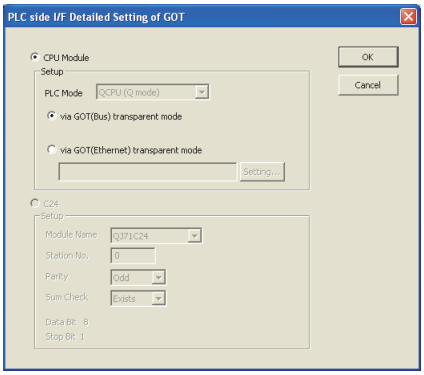

4. Double-click [GOT] of the CPU side I/F to display [CPU side I/F Detailed Setting of GOT].
5. Mark the [via GOT(Bus) transparent mode] checkbox on the [CPU side I/F Detailed Setting of GOT] screen.

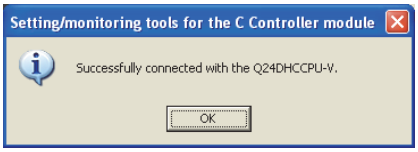

6. The screen returns to [Transfer Setup]. Click [Connection Test] to check if Setting/Monitoring tool for C Controller module has been connected to the motion controller (Q mode).

■When connecting the GOT and PLC in Ethernet communication

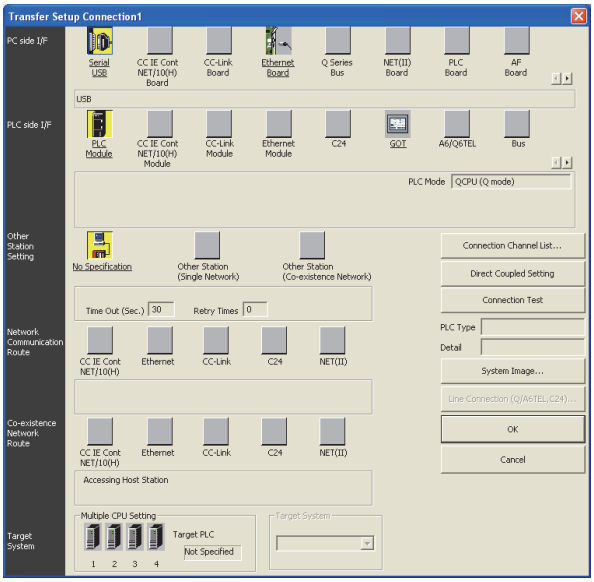

1. Click the Connection Destination view → [Connection Destination] → [(Connection target data name)] in the Navigation window of MT Setting/Monitoring tool for C Controller module.
2. The [Transfer Setup] is displayed.
3. Set the [Transfer Setup]:

PLC side I/F : GOT

Other station : No specification

4. Double-click [GOT] of the CPU side I/F to display [CPU side I/F Detailed Setting of GOT].
5. Mark the [via GOT(Ethernet) transparent mode] checkbox on the [CPU side I/F Detailed Setting of GOT] screen.

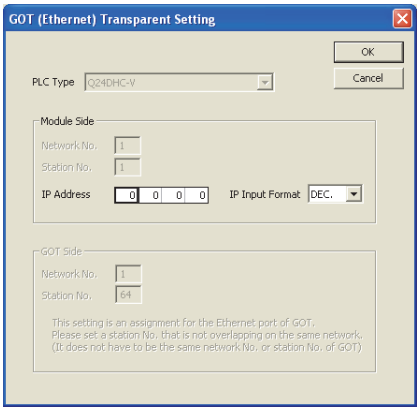

6. By clicking [Set], the [GOT (Ethernet) Transparent Setting] is displayed.

Here, set the C Controller module (Q Series) (Q24DHCCPU-V), which is firstly connected via a GOT.

7. Specify the IP address for [IP address] same as the IP address assigned to the C Controller module (Q Series) (Q24DHCCPU-V).

8. The screen returns to [Transfer Setup]. Click [Connection Test] to check if Setting/Monitoring tool for C Controller module has been connected to the C Controller module (Q Series) (Q24DHCCPU-V).

When connecting the GOT and personal computer in Ethernet connection

■When connecting the GOT and PLC in bus connection

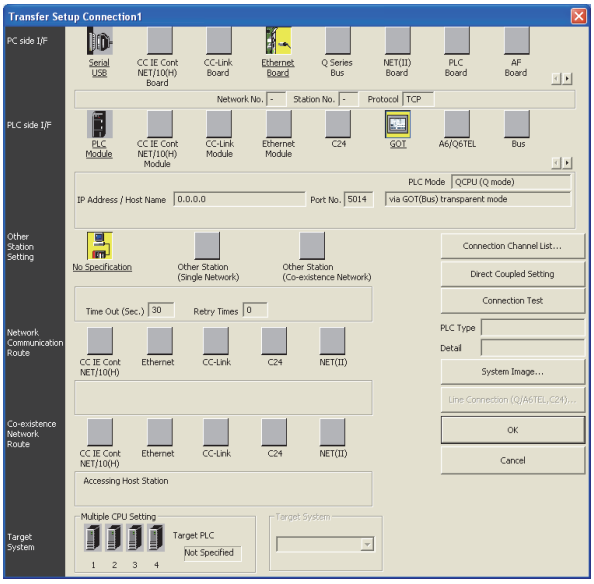

1. Click the Connection Destination view → [Connection Destination] → [(Connection target data name)] in the Navigation window of MT Setting/Monitoring tool for C Controller module.

2. The [Transfer Setup] is displayed.

3. Set the [Transfer Setup]:

PC side I/F : Ethernet Board

PLC side I/F : GOT

Other station : No specification

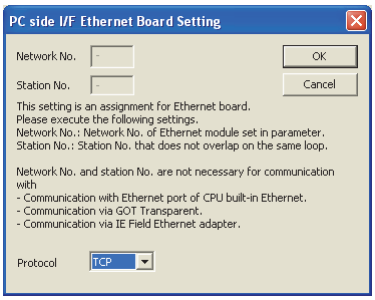

4. Double-click [Ethernet Board] of the PC side I/F to display [PC side I/F Ethernet Board Setting].

5. Set the protocol to TCP. Network No. and Station No. are not required to be changed (default) because they are not used.

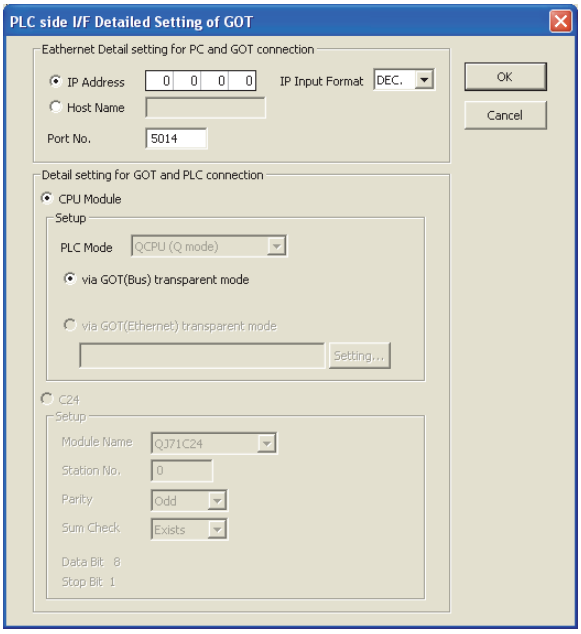

6. Double-click [GOT] of the PLC side I/F to display [PLC side I/F Detailed Setting of GOT].

7. Set the IP address and port No. in [Ethernet detail setting for PC and GOT connection].

Check the IP address and port number on the GOT side in the [GOT Ethernet Setting] window in GT Designer3.

For the details, refer to the following.

📖GT Designer3 (GOT2000) Screen Design Manual

8. The screen returns to [Transfer Setup]. Click [Connection Test] to check if Setting/Monitoring tool for C Controller module has been connected to the motion controller (Q mode).

Accessing by MX Component (MX Sheet)

This section explains the procedure to set the FA transparent function of MX Component(MX Sheet) with an example of MX Sheet Version2.

Point

MX Component(MX Sheet) manuals

For details of the MX Component(MX Sheet), refer to the following manual.

MX Sheet Version 2 Operating Manual (Introduction)

MX Component Version 4 Operating Manual

When MX Component is used alone

Start [Communication Setting Utility] and start communication setting from the following step 3.

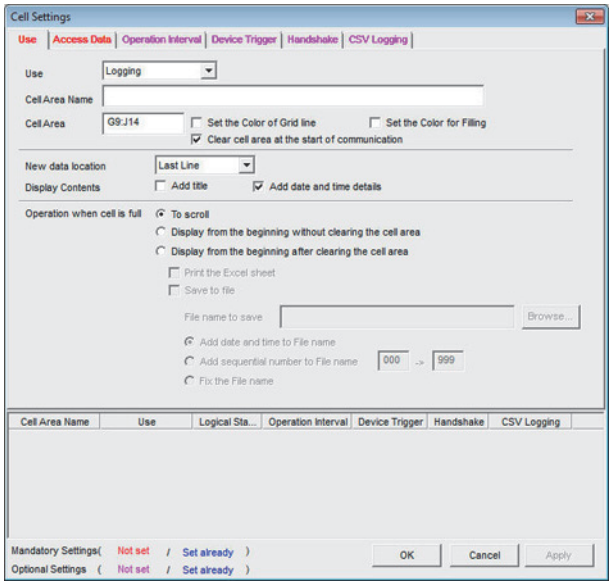

1. Click [MX sheet] of Microsoft Excel → [Cell Settings].

Set [Use] and click [Access Data].

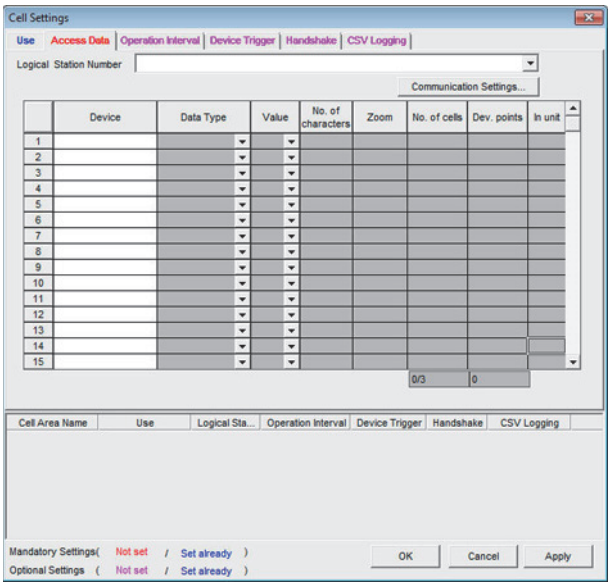

2. Click [Communication Setting].

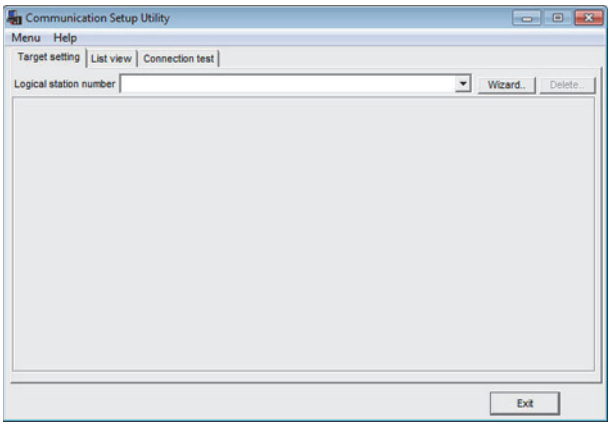

3. Click [Wizard].

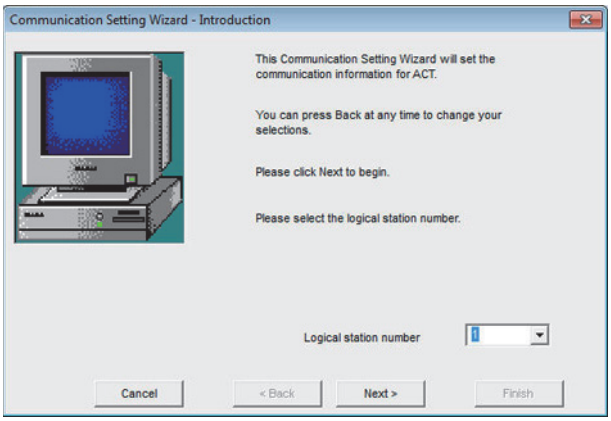

4. Set [Logical station number] and click [Next].

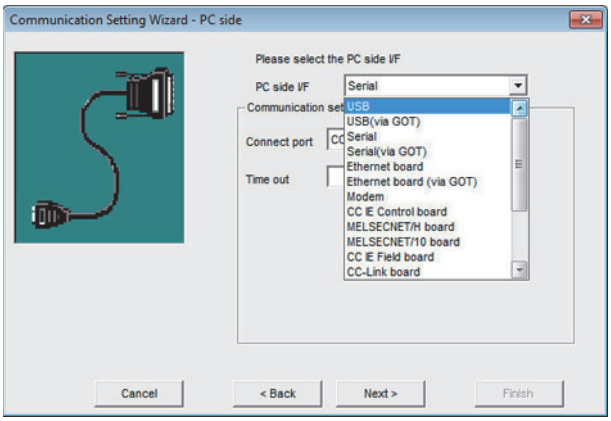

5. Select either of the following option from [PC side I/F] according to the connection configuration and click [Next].

GOT and USB connection

[USB (Via GOT)]

GOT and Ethernet connection

[Ethernet Board (Via GOT)]

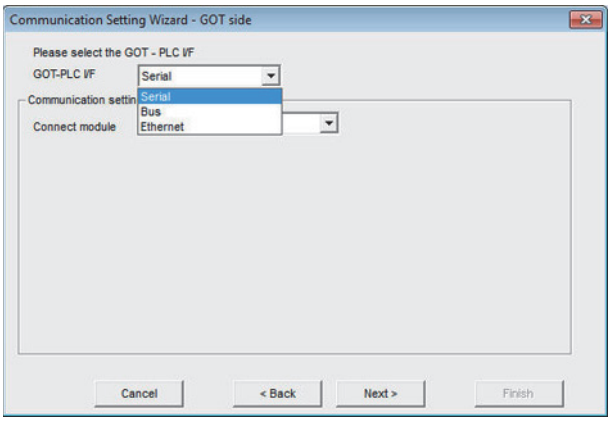

6. Select either of the following option from [GOT PLC I/F] according to the connection configuration.

Direct CPU connection (serial)

[Serial]

Bus connection

[Bus connection]

Ethernet connection

[Ethernet]

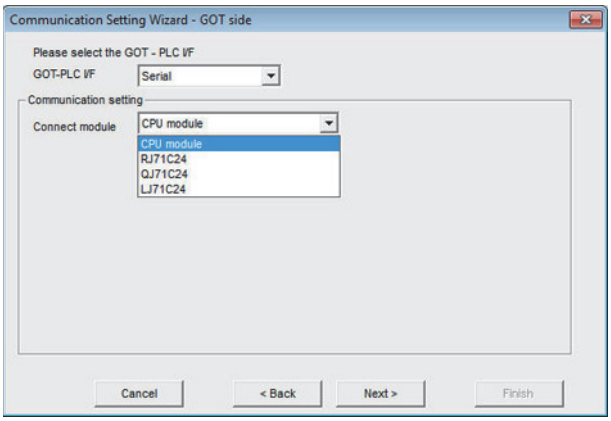

7. Select either of the following option from [Connect module] according to the setting of [GOT PLC I/F] and click [Next].

- For [Serial]

[CPU unit],[RJ71C24],[QJ71C24],
[LJ71C24]

- For [Bus connection]

[CPU unit]

- For [Ethernet]

[CPU unit], [QJ71E71], [RJ71E71],[CC IE Field Ethernet adapter], [FX3U-ENET-ADP]
[FX3U-ENET(-L)], [CPU unit(FX5)]

For example, set as shown below and click [Next].
[GOT and PLC I/F]: [Ethernet]
[Connection destination unit type]: [CPU unit]

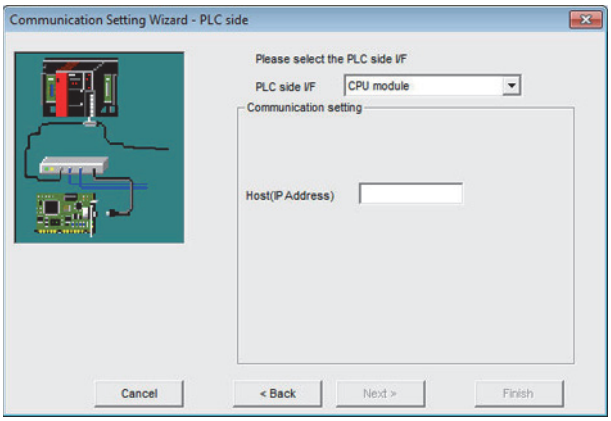

- Select [Host(IP Address)] according to the connection configuration and click [Next].

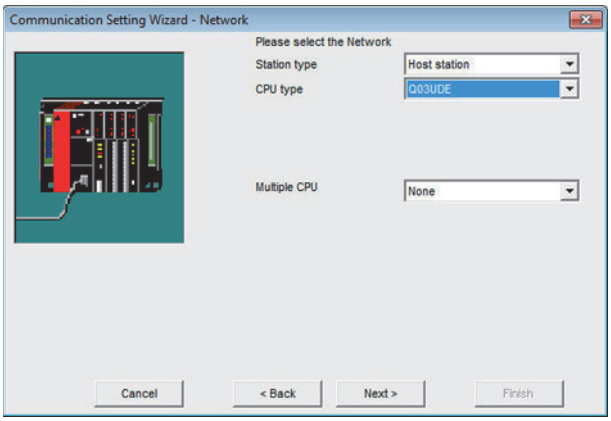

8. Select [Station type], [CPU type], and [Multiple CPU] according to the connection configuration and click [Next].

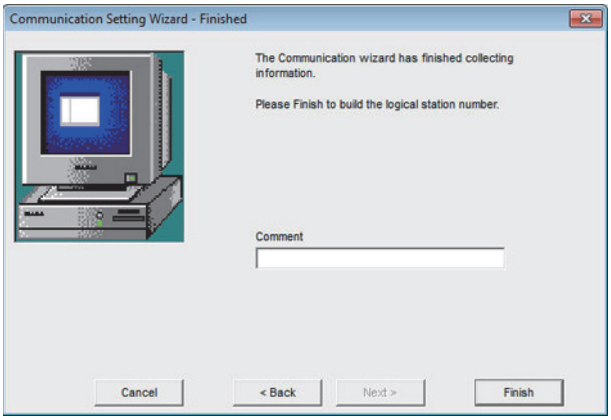

9. Set [Comment] and click [Finish].

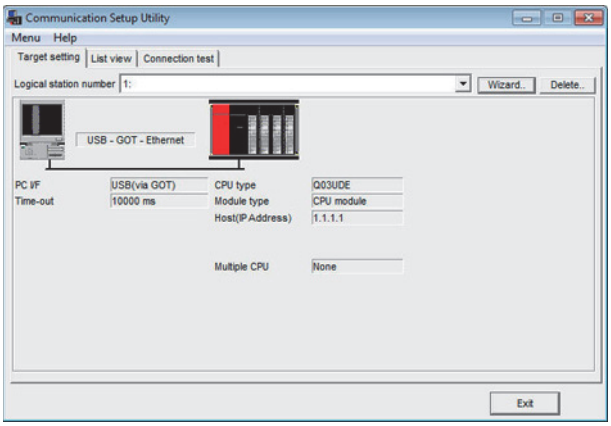

10. Click [Connection test]

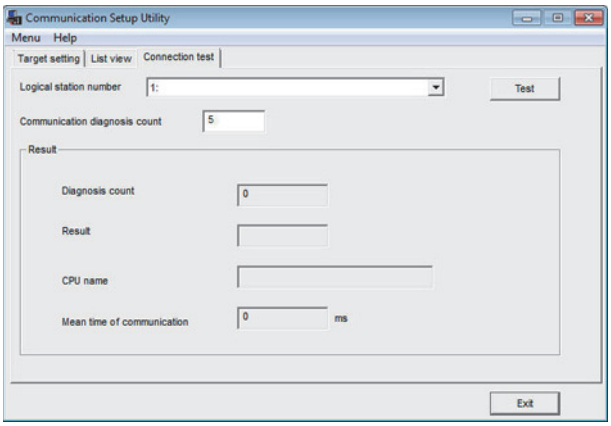

11. Click [Test] and check that normal communication is performed.

Accessing by MI Configurator

This section explains the procedure to set the FA transparent function of the MI Configurator.

When connecting the GOT and personal computer with USB

■When connecting the GOT and PLC in bus connection

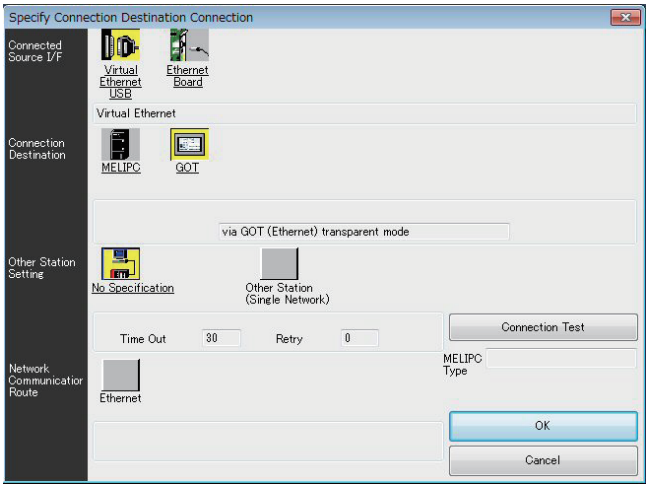

1. Click [Online] → [Transfer Setup] in MI Configurator.

2. The [Transfer Setup] is displayed.

3. Set the [Transfer Setup].

Connection source I/F : USB

Connection destination I/F : GOT

Other station : No specification

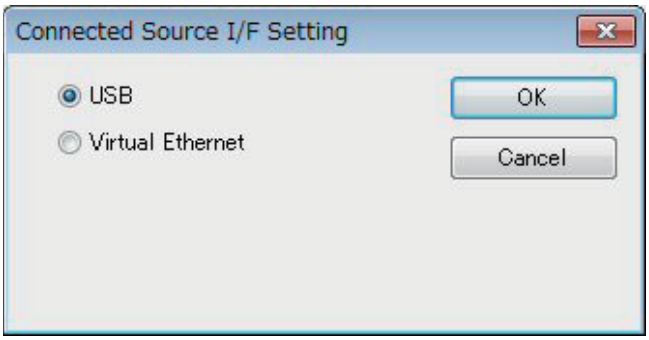

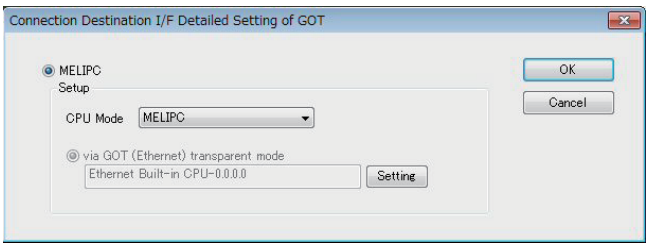

4. Double-click [GOT] of the Connection destination I/F to display [Connection destination I/F Detailed Setting of GOT].

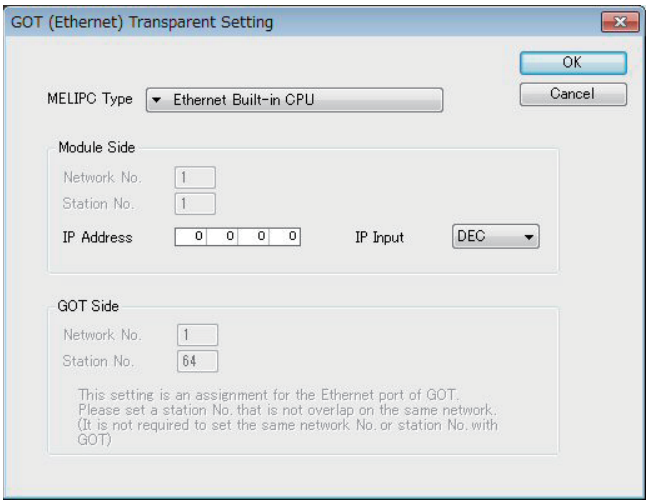

5. By clicking [Set], the [GOT (Ethernet) Transparent Setting] is displayed.

6. Specify the IP address for [IP address] same as the IP address assigned to the MELIPC.

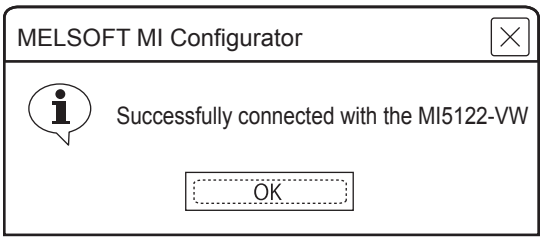

7. The screen returns to the [Transfer Setup]. Click the [Connection Test] to check if MI Configurator has been connected to the MELIPC.

When connecting the GOT and personal computer in Ethernet connection

■When connecting the GOT and PLC in Ethernet communication

Configure the settings of [Connected Ethernet Controller Setting] on the GOT.

The routing setting may also be needed for the GOT side depending on the system configuration.

For details, refer to the following procedure.

- When the routing setting is not needed for the GOT side

1) System configuration

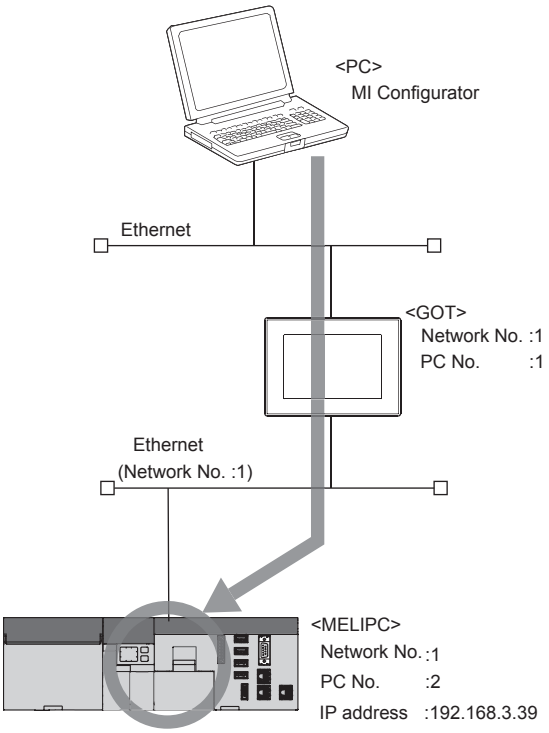

2) [Connected Ethernet Controller Setting] of GT Designer3

Set the network No., PC No., and IP address of the target PLC CPUs for the FA transparent function in GT Designer3.

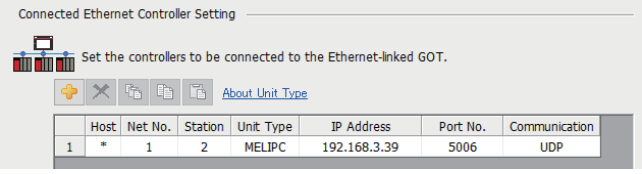

	Host	Net No.	Station	Unit Type	IP Address	Port No.	Communication
1	*	1	2	MELIPC	192.168.3.39	5006	UDP

☞ Page 217 ETHERNET CONNECTION

3) MI Configurator settings

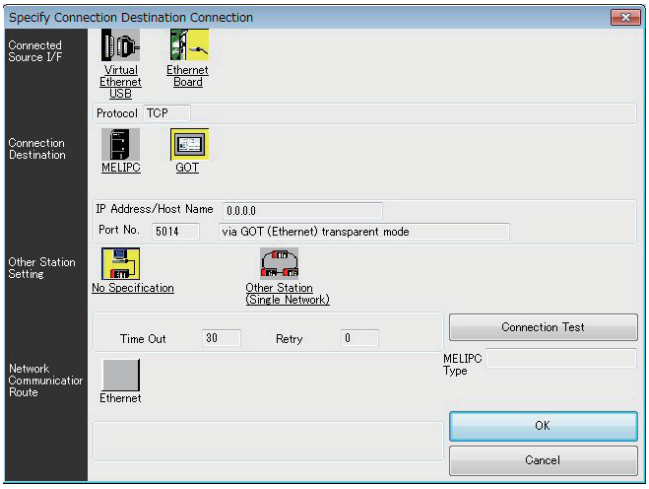

1. Click [Online] → [Transfer Setup] in MI Configurator.

2. The [Transfer Setup] is displayed.

3. Set the [Transfer Setup].

Connection source I/F : Ethernet Board

Connection destination I/F : GOT

Other station : No specification

4. Double-click [GOT] of the Connection destination I/F to display [Connection destination I/F Detailed Setting of GOT].

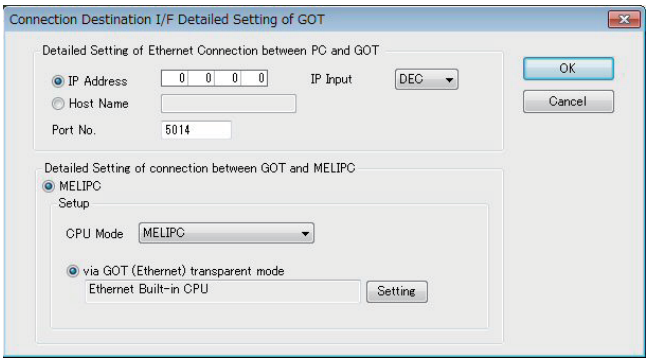

5. Set the IP address and port No. in [Ethernet detail setting for PC and GOT connection].

Check the IP address and port number on the GOT side in the [GOT Ethernet Setting] window in GT Designer3.

For the details, refer to the following.

📖GT Designer3 (GOT2000) Screen Design Manual

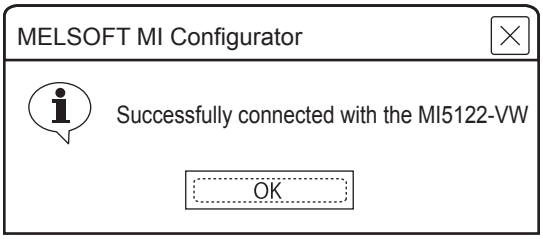

6. The screen returns to the [Transfer Setup]. Click the [Connection Test] to check if MI Configurator has been connected to the MELIPC.

• When the routing setting is needed for the GOT side

1) System configuration

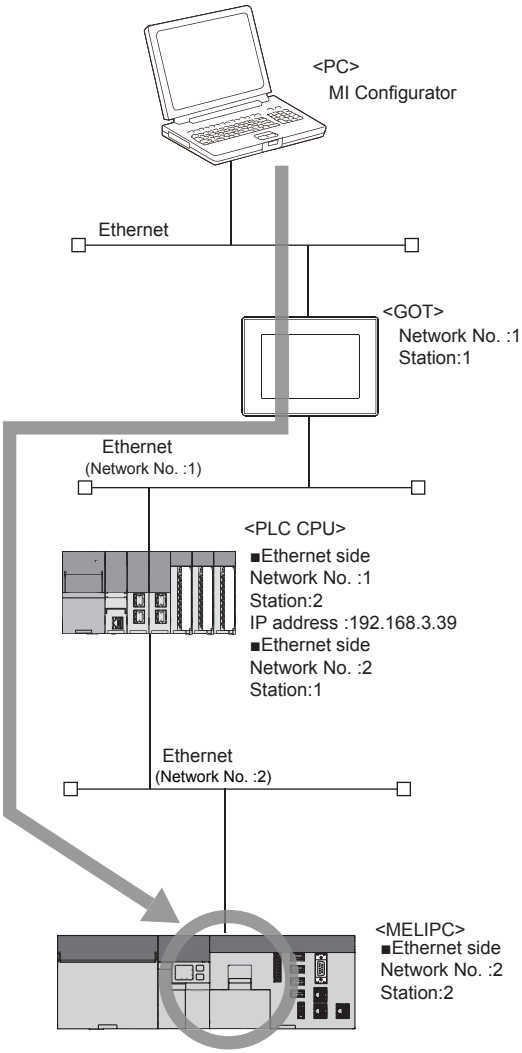

2) [Connected Ethernet Controller Setting] of GT Designer3

Set the network No., PC No., and IP address of the target PLC CPUs for the FA transparent function in GT Designer3.

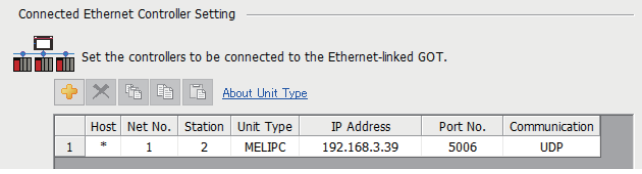

	Host	Net No.	Station	Unit Type	IP Address	Port No.	Communication
1	*	1	2	MELIPC	192.168.3.39	5006	UDP

☞ Page 217 ETHERNET CONNECTION

3) Routing setting of GT Designer3

Be sure to set the transfer network No., relay network No., and relay station No. for CPUs supporting the FA transparent function by GT Desinger3.

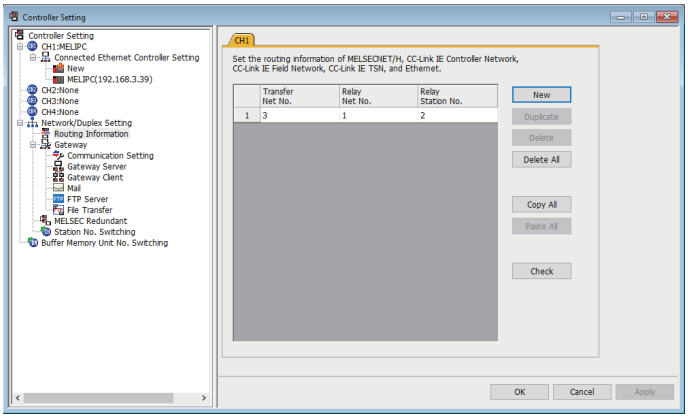

4) MI Configurator settings

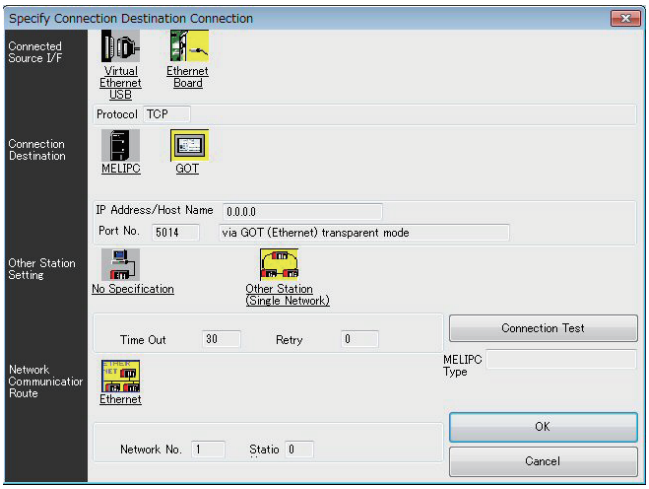

1. Click [Online] → [Transfer Setup] in MI Configurator.

2. The [Transfer Setup] is displayed.

3. Set the [Transfer Setup].

Connection source I/F : Ethernet Board

Connection destination I/F : GOT

Other station Setting: Other Station (Single Network)

Network Communication Rute: Ethernet

4. Double-click [Ethernet] of the [Network Communication Rute] to set the network No. and station No.

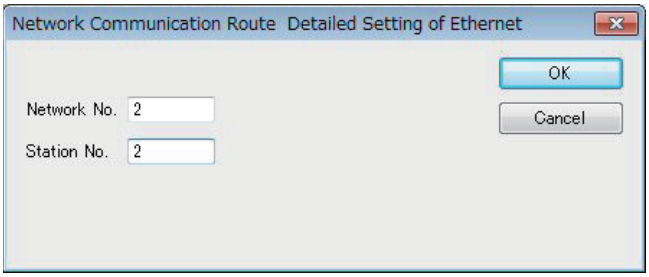

5. Double-click [GOT] of the Connection destination I/F to display [Connection destination I/F Detailed Setting of GOT].

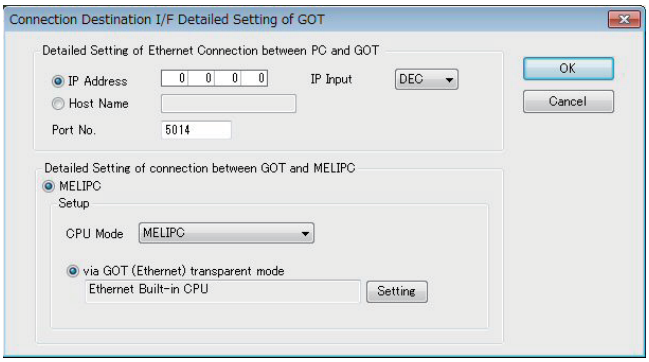

6. Set the IP address and port No. in [Ethernet detail setting for PC and GOT connection].

Check the IP address and port number on the GOT side in the [GOT Ethernet Setting] window in GT Designer3.

For the details, refer to the following.

📖GT Designer3 (GOT2000) Screen Design Manual

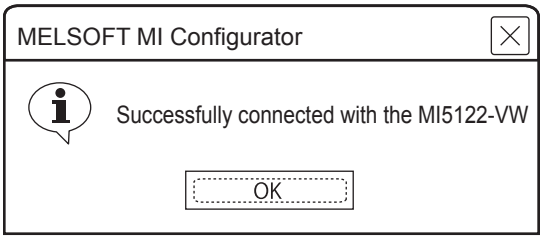

7. The screen returns to the [Transfer Setup]. Click the [Connection Test] to check if MI Configurator has been connected to the MELIPC.

23.8 Precautions

Precautions common to each software

GOT interface required to use the FA transparent function

Connect the personal computer, to which PX Developer or any other relevant software has been installed, to the USB interface of the GOT.
When performing the FA transparent function, use USB interface of the GOT.
Using both of them to perform the FA transparent function concurrently is not allowed.

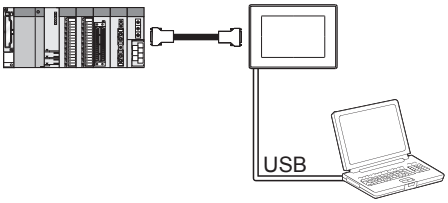

Conditions for suspending the FA transparent function

The FA transparent function is also suspended when any of the following operations, which stop the GOT monitor, is performed.
Note that the FA transparent function will not be stopped while using the extended function such as the Utility display or ladder monitor function.

- When project data is written/read, or when the OS is written by GT Designer3[*1]
- When the GOT is set up[*1]
- When no communication request (online monitor, etc.) has been issued from PX Developer for 45 minutes

*1 A timeout error occurs in PX Developer.

When GOT monitoring is faulty

The FA transparent function cannot be used in case that the GOT monitoring is faulty due to PLC CPU errors or faulty communication between the PLC CPU and GOT.
When GOT monitoring is faulty, check the following.

■Whether the PLC CPU operates normally

☞ Refer to the User's Manual of the PLC CPU you use.

■Whether the PLC CPU and GOT are connected normally

☞ Page 375 DIRECT CPU CONNECTION (SERIAL)
☞ Page 439 SERIAL COMMUNICATION CONNECTION
☞ Page 493 BUS CONNECTION

When monitoring the PLC CPU from a personal computer

When monitoring the PLC CPU from a personal computer, the GOT and personal computer refresh the display slower.

Software available for the FA transparent function

When multiple kinds of software are activated on one personal computer, only one of them is available for communications using the FA transparent function.
Do not concurrently perform any communications using the FA transparent function.
(Offline operation with each software is available)
Also, do not perform communications with the GOT (e.g. downloading project data) from GT Designer3 during execution of communications using the FA transparent function.

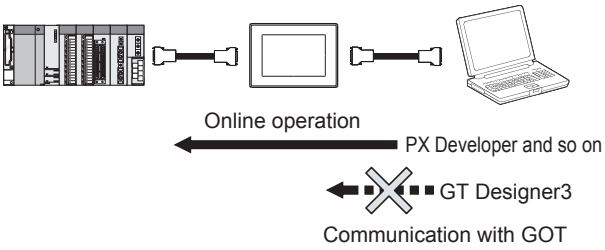

When the FA transparent function is used in a bus connection

■When multiple GOTs are bus-connected

When multiple GOTs are bus-connected, the FA transparent function can be used on each GOT.
However, note that the monitoring performance of each GOT slows down as the number of monitoring GOTs and personal computers increases.

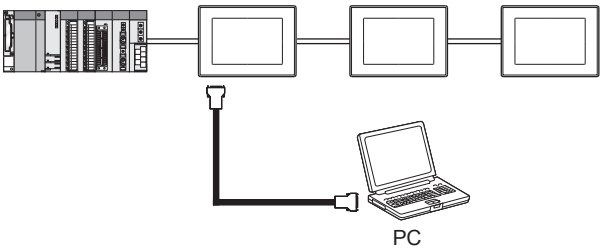

■When the FA transparent function is used in a bus connection

When the FA transparent function is used in a bus connection, the following GX Works2 functions cannot be executed.
The message [The executed function is not supported. Please check the manual and other documentation.] is displayed on GX Works2.

Unsupported functions	Remark
• Remote Reset • Remote system reset	—
• Remote RUN • Remote STOP • Remote PAUSE • Remote STEP-RUN • Remote latch clear • Write clock data • Clear malfunction log	Inexecutable only when specify all stations/groups has been performed.

When PLC power disconnection occurs with the FA transparent function being used

While the FA transparent function is being used, if the communication between the PLC and the GOT is stopped due to PLC power disconnection or a disconnection of the communication cable between the PLC and the GOT, the GOT waits for timeout against the communication request from the peripheral devices (PX Developer, etc.), and it takes a few minutes to recover the monitoring between the PLC and the GOT.

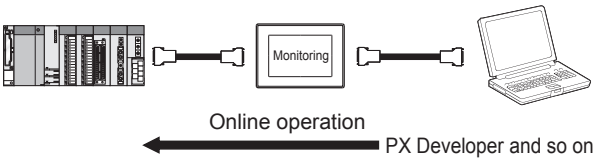

When the FA transparent function is used in an Ethernet connection

■GX Works3, GX Works2 function

When the FA transparent function is used in an Ethernet connection, the following GX Works3, GX Works2 functions cannot be executed.

The message [The executed function is not supported. Please check the manual and other documentation.] is displayed on GX Works3, GX Works2.

Unsupported functions	Remark
• Remote Reset • Remote system reset	—
• Remote RUN • Remote STOP • Remote PAUSE • Remote STEP-RUN • Remote latch clear • Write clock data • Clear malfunction log	Inexecutable only when specify all stations/groups has been performed.
• Remote password function • MELSECNET diagnostics • CC IE Control diagnostics • CC-Link IE TSN/CC-Link IE Field diagnostics (GX Works3) • CC IE Field diagnostics (GX Works2) • Ethernet diagnostics (PING test/loopback test with the Ethernet module (R/Q series))	—

■GOT station monitoring function

When the FA transparent function is used in an Ethernet connection, GOT station monitoring function cannot be operated. Therefore, in the cases of [no connection target], [PLC power OFF], etc., the monitoring of the GOT delays for the timeout time.

■When connecting to FXCPU

When connecting the GOT and FXCPU in Ethernet communication, and using the FA transparent function, a timeout may occur.

When a timeout occurs, set [Delay Time] in the communication detail settings according to the circumstance of the system.

☞ Page 249 Communication detail settings

When connecting the GOT multi-drop connection

FA transparent function is available for each GOT in the GOT multi-drop connection system.

■Standard monitor OS installation, Communication driver writing

When using FA transparent function in GOT multi-drop connection, the writing of the standard monitor OS and communication driver to the GOT from GT Designer3 (Version 1.18U or later), as well as the writing of the standard monitor OS and communication driver to the serial multi-drop connection unit are required.

■Number of personal computers

Only one personal computer can be connected to the multi-drop connection system.

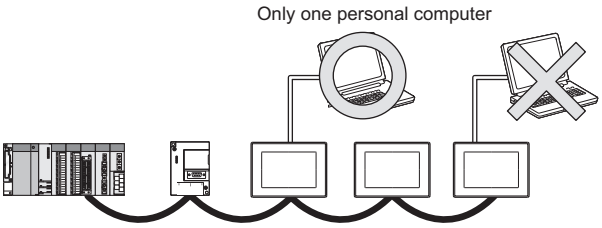

■Monitor speed of GOT

The monitoring performance slows down according to the number of monitoring GOTs. While using FA transparent function, the monitoring performance of the whole multi-drop system decreases. As a result, timeout error may occur in GOTs in the system.

When connecting the GOT and the personal computer by USB

When the following operations are executed, the display on the GOT may stop temporarily or a timeout message may appear on GX Works3 or GX Works2.
The operations are executed in the PLC.

Operation	Target station
• Remote Reset	Current station
• Remote RUN • Remote STOP • Remote PAUSE • Remote STEP-RUN • Remote Reset • Remote latch clear • Write clock data	All stations

When using GX Works3, GX Works2

When [monitor conditions] have been set on GX Works3, GX Works2

■Monitoring performance of the GOT is temporarily suspended.

■The GOT cannot respond to the touch switch operation and numerical/ascii inputs.

■Writing to PLC results in a system alarm occurrence and displays the message, "315 Device writing error. Correct device.".

■While setting the monitor conditions, do not perform any operation which makes the GOT restart (e.g. downloading project data, changing utility data).

Doing so may display a system alarm, "402 Communication timeout. Confirm communication pathway or modules." when the GOT restarts.
When the monitor conditions setting for the PLC CPU has not been cancelled, reconnect GX Works3, GX Works2 to cancel the setting.(An error may be output when the monitor conditions setting is cancelled.)

■When the time check of GX Works3, GX Works2 is set to 30 seconds or more in the monitor condition settings, the message "402 Communication timeout. Confirm communication pathway or modules." may appear.

Set the time check time of GX Works3, GX Works2 to 30 seconds or less.

When exiting GX Works3, GX Works2

For 30 seconds after GX Works3, GX Works2 has been exited, the GOT continues monitoring at the same speed as when the FA transparent function is working.

When performing [Read to PLC], [Write to PLC] and other file operations on GX Works3, GX Works2

If any of the following GOT functions is executed during the file operation such as [Read to PLC] or [Write to PLC], an error may occur on the GOT, GX Works3, GX Works2.

In this case, take the following corrective action:

- File reading in the ladder monitor function for MELSEC-Q

Error messages on GOT	Corrective action on GOT side	Error messages on GX Works2	Corrective action on GX Works2
The file is not found.	With no file operation being executed on GX Works2, re-execute the file reading.	File access failure. Please retry.	With no file reading being executed in the ladder monitor function for MELSEC-Q, re-execute the file operation.

- Read/write of values of the file register specified for the recipe function

Error messages on GOT	Corrective action on GOT side	Error messages on GX Works2	Corrective action on GX Works2
358 PLC file access failure. Confirm PLC drive.*1	With no file operation on GX Works3, GX Works2, turn ON the trigger device for the recipe function again.	File access failure. Please retry.	Execute the file access operation again with the recipe in-process signal in GOT system information OFF.
		PLC file system error. Unable to communicate with PLC.	

*1 The numerical indicates the system alarm No.

- Reading TC monitor set value in the system monitor function

Error messages on GOT	Corrective action on GOT side	Error messages on GX Works2	Corrective action on GX Works2
No message is displayed. (The TC set value space is blank.)	With no file operation being executed on GX Works3, GX Works2, re-execute the TC monitor.	File access failure. Please retry.	With no TC set value being read, re-execute the file operation.

- Reading the special module monitor CPU Malfunction log

Error messages on GOT	Corrective action on GOT side	Error messages on GX Works2	Corrective action on GX Works2
Communication error	With no file operation being executed on GX Works3, GX Works2, re-execute the CPU malfunction log reading.	File access failure. Please retry.	With no special module monitor malfunction log being read, execute the file operation.

- Backup/restore

Error messages on GOT	Corrective action on GOT side	Error messages on GX Works2	Corrective action on GX Works2
Backup	With no file operation being executed on GX Works2, re-execute the backup.	-	With no backup being executed, execute the file operation.
Restore	With no file operation being executed on GX Works2, re-execute the restore.	-	With no restore being executed, execute the file operation.

- SFC monitor file reading

Error messages on GOT	Corrective action on GOT side	Error messages on GX Works2	Corrective action on GX Works2
-	With no file operation being executed on GX Works3, GX Works2, re-execute the file reading.	-	With no special module monitor CPU malfunction log being read, execute the file operation.

- Reading/Writing files of ladder edit

Error messages on GOT	Corrective action on GOT side	Error messages on GX Works2	Corrective action on GX Works2
Read	With no file operation being executed on GX Works2, re-execute the file reading.	—	With no file reading being executed on ladder edit, execute the file operation.
Write	With no file operation being executed on GX Works3, GX Works2, re-execute the file writing.	—	With no file writing being executed on ladder edit, execute the file operation.

When PLC write fails while using the FA transparent function

The execution of PLC write using the FA transparent function may fail due to some reason such as cable disconnection.
When this occurs, re-execute the PLC write from the same personal computer, or reset the PLC CPU.

Restrictions on GX Works2 during backup/restoration

■When PLC read, PLC write, or monitoring is executed from GX Works2 using the FA transparent function during backup/restoration of the GOT, the backup/restoration stops.

Check that PLC read, PLC write, or monitoring is not executed from GX Works2 using the FA transparent. Then, execute backup/restoration of the GOT again.

■When backup/restoration is executed from the GOT while PLC read, PLC write, monitoring, or other operation is run with GX Works2 using the FA transparent function, an errors on GX Works2.

Backup/restoration of the GOT is correctly executed.

When using MT Developer, MT Works2

When exiting MT Developer, MT Works2

For 45 seconds after MT Developer, MT Works2 has been exited, the GOT continues monitoring at the same speed as when the FA transparent function is working.

When PLC write fails while using the FA transparent function

The execution of PLC write to the Motion CPU using the FA transparent function may fail due to some reasons such as cable disconnection.
In that case, re-execute the PLC write from the same personal computer, or reset the Motion CPU.

When a cable disconnection has occurred

When the cable between the GOT and the motion CPU is disconnected, it takes time until a timeout error occurs in MT Developer, MT Works2.

When using MR Configurator, MR Configurator2

Unavailable functions and restrictions

For the use via the motion controller, there are unavailable functions and restrictions.
For details on the restrictions, refer to the help screen of MR Configurator.

Monitor speed of GOT

Since the FA transparent function is used via the motion CPU, the monitor speed of GOT is slow.

When using FR Configurator, FR Configurator2

GOT monitoring when using FA transparent function

When FA transparent function is used, GOT suspends monitoring on channels supporting FA transparent function.

Point

Cancelling the suspended GOT monitoring immediately

To cancel the suspended (45 seconds) GOT monitoring immediate30ly after FA transparent is executed, input "1" to device GS457.Then GOT resumes monitoring.

If FA transparent is resumed even if "1" is already input to device GS457, an error will occur on FR Configurator.

For the details of the device, refer to the following manual.

GT Designer3 Version□ Screen Design Manual

When using the oscilloscope function (When using FR Configurator)

Since the monitoring of the inverter data may be not performed at the specified sampling intervals depending on the settings of oscilloscope function, adjust the communication setting, a sampling interval, etc.

PU mode operation command source selection

On the setting of PU mode operation command source selection (Pr:551) of the inverter, specify the terminal (1:RS-485 terminals, 2:PU connected) connected to GOT.

When displaying the monitor screen of FR Configurator2

■Timing for displaying the monitor screen of FR Configurator2

After displaying the monitor screen, move online.

If the monitor screen is displayed after the timeout time of FR Configurator2 has passed, an error may occur.

■Refreshing the monitor screen after the inverter reset

If the monitor screen is displayed after the inverter reset has been performed in the [Faults history] window of FR Configurator2, an error may occur.

If an error occurs, lengthen the communication timeout time in FR Configurator2.

High speed sampling using FR Configurator2

High speed sampling is unavailable when the FA transparent function is used.

APPENDIX

Appendix 1 Settable Device Range

This section describes the range of devices settable in GT Designer3 for each of Mitsubishi Electric products connected to the GOT.

The settable range varies with the selection for [Controller Type] in the [Controller Setting] window.

Configure the device setting according to the specifications of the controller to be used.

Device specifications differ depending on the controller model even among the controllers of the same series.

If a non-existent device or a device number out of the range is set for an object, other objects for which correct devices are set may not be monitored.

☞ Page 1384 Device setting dialog (Mitsubishi Electric equipment)
☞ Page 1393 [MELSEC iQ-R, RnMT/NC/RT, CR800-D], [MELSEC iQ-R, RnMT/RT, CR800-D]
☞ Page 1479 [MELSEC iQ-F]
☞ Page 1496 [MELSEC-Q/QS, Q17nD/M/NC/DR/DSR, CRnD-700], [MELSEC-Q, Q17nD/M/DR/DSR, CRnD-700]
☞ Page 1514 [MELSEC QnA, MELDAS C6*]
☞ Page 1518 [MELSEC-L]
☞ Page 1532 [MELSEC-A]
☞ Page 1536 [MELSEC-FX]
☞ Page 1543 [MELSEC-WS]
☞ Page 1548 [MELIPC]
☞ Page 1550 [MELSERVO-J2M-P8A]
☞ Page 1557 [MELSERVO-J2M-*DU]
☞ Page 1565 [MELSERVO-J2S-*A]
☞ Page 1573 [MELSERVO-J2S-*CP]
☞ Page 1583 [MELSERVO-J2S-*CL]
☞ Page 1592 [MELSERVO-J3-*A]
☞ Page 1602 [MELSERVO-J3-*T]
☞ Page 1615 [MELSERVO-J4-*A, -JE-*A]
☞ Page 1632 [MELSERVO-J4-*A-RJ]
☞ Page 1655 [MELSERVO-JE-*C]
☞ Page 1673 [MELSERVO-J5(W)-*G(-RJ), -JET-*G]
☞ Page 1708 [FREQROL 500/700/800, SENSORLESS SERVO]
☞ Page 1717 [FREQROL 800]
☞ Page 1725 [FREQROL 800/E700NE(Batch monitor)]
☞ Page 1745 [Laser Displacement Sensor MH11]

A

Device setting dialog (Mitsubishi Electric equipment)

Set a device to be monitored.

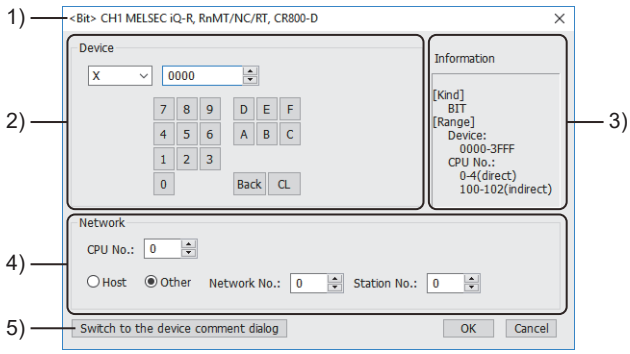

[MELSEC iQ-R, RnMT/NC/RT, CR800-D]

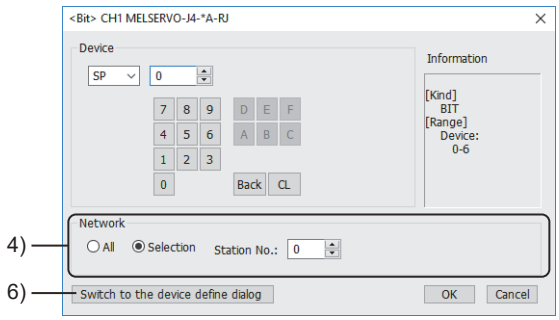

[MELSERVO-J4-*A-RJ]

1) Title

Data type and channel number of the device to be set

2) [Device]

Set the device name and device number.

If a bit number needs to be specified, the setting item is displayed.

Example) Setting of X0000

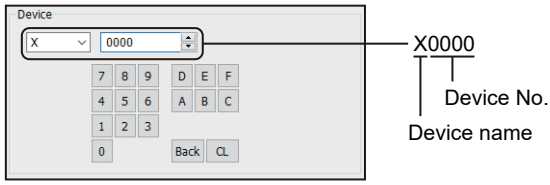

The setting items vary with the selected device name.

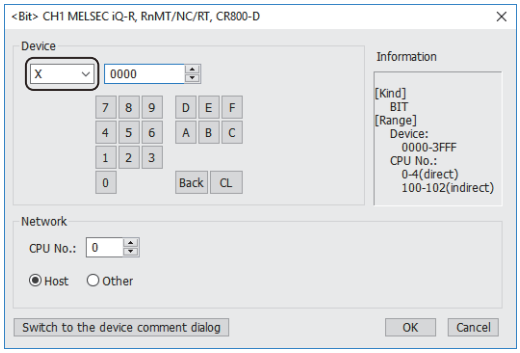

When [X] is selected for the device name

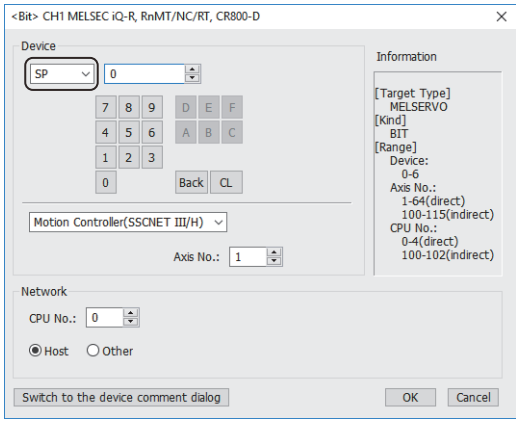

When [SP] is selected for the device name

3) [Information]

Displays the setting range of each setting item according to the selected device.

4) [Network]

Set the station number of the controller to be monitored.

The setting items depend on the controller setting.

☞ Page 1386 Network setting for connection to the Mitsubishi Electric PLC
☞ Page 1388 Network setting for connection to the Mitsubishi Electric servo amplifier
☞ Page 1390 Network setting for connection to the Mitsubishi Electric inverter

5) [Switch to the device comment dialog] button

You can open the device comment setting dialog to check the device comments imported to GT Designer3.

For the details, refer to the following.

📖GT Designer3 (GOT2000) Screen Design Manual

6) [Switch to the device define dialog] button

You can open the device definition setting dialog to check the definitions of the virtual servo amplifier or inverter devices.

For the details, refer to the following.

📖GT Designer3 (GOT2000) Screen Design Manual

For the formats of devices, refer to the following.

For the details, refer to the following.

📖GT Designer3 (GOT2000) Screen Design Manual

For the specifications of each device, refer to the following.

☞ Page 1393 [MELSEC iQ-R, RnMT/NC/RT, CR800-D], [MELSEC iQ-R, RnMT/RT, CR800-D]
☞ Page 1479 [MELSEC iQ-F]
☞ Page 1496 [MELSEC-Q/QS, Q17nD/M/NC/DR/DSR, CRnD-700], [MELSEC-Q, Q17nD/M/DR/DSR, CRnD-700]
☞ Page 1514 [MELSEC QnA, MELDAS C6*]
☞ Page 1518 [MELSEC-L]
☞ Page 1532 [MELSEC-A]
☞ Page 1536 [MELSEC-FX]
☞ Page 1543 [MELSEC-WS]
☞ Page 1548 [MELIPC]
☞ Page 1550 [MELSERVO-J2M-P8A]
☞ Page 1557 [MELSERVO-J2M-*DU]
☞ Page 1565 [MELSERVO-J2S-*A]
☞ Page 1573 [MELSERVO-J2S-*CP]
☞ Page 1583 [MELSERVO-J2S-*CL]
☞ Page 1592 [MELSERVO-J3-*A]
☞ Page 1602 [MELSERVO-J3-*T]
☞ Page 1615 [MELSERVO-J4-*A, -JE-*A]
☞ Page 1632 [MELSERVO-J4-*A-RJ]
☞ Page 1655 [MELSERVO-JE-*C]
☞ Page 1673 [MELSERVO-J5(W)-*G(-RJ), -JET-*G]
☞ Page 1708 [FREQROL 500/700/800, SENSORLESS SERVO]
☞ Page 1717 [FREQROL 800]
☞ Page 1725 [FREQROL 800/E700NE(Batch monitor)]
☞ Page 1745 [Laser Displacement Sensor MH11]

Network setting for connection to the Mitsubishi Electric PLC

Configure the following settings for connecting to a Mitsubishi Electric PLC.

Example) Device setting dialog for [MELSEC iQ-R, RnMT/NC/RT, CR800-D]

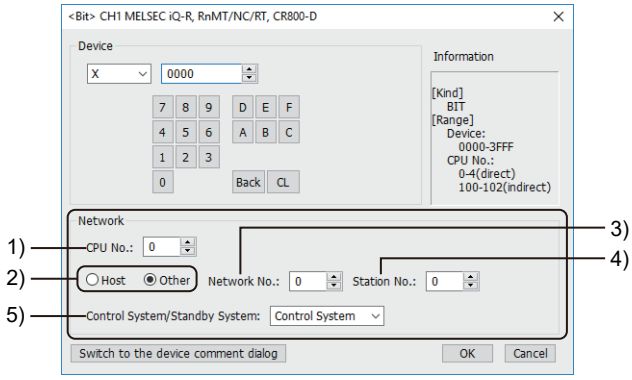

1) [CPU No.]

Set the CPU number of the controller.

☞ Page 1387 Setting the CPU No.

2) Station type specification

Select the station type (host or other) for the controller to be monitored.

- [Host]: The controller to be monitored is the host station.
- [Other]: The controller to be monitored is not the host station.

When monitoring link relay (B) and link register (W) assigned in link parameter and network parameter, select [Host].

If [Other] is selected, the cyclic transmission will be changed to the transient transmission irrespective of the network type, resulting in delay of the object display.

Set RX, RY, RWw, RWr, LB, or LW as [Host] when monitoring a cyclic device.

3) [Network No.]

This item appears when [Other] is selected for the station type.

Specify a network number.

4) [Station No.]

This item appears when [Other] is selected for the station type.

Specify a station number.

5) [Control System/Standby System]

This item can be set only when [Use the function of MELSEC Redundant] is selected in [MELSEC Redundant] of the [Controller Setting] window.

The following shows the items to be selected.

- [Control System]
- [Standby System]

Example) Display terminology of the control system

1-1/1-S W0.b0

[-S] is displayed for a device of the standby system.

For the details, refer to the following.

📖GT Designer3 (GOT2000) Screen Design Manual

■Setting the CPU No.

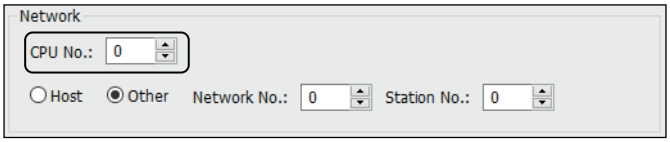

The setting range depends on the system configuration of the monitoring target.

Item	Description
When monitoring a single CPU system	Set the CPU No. to [0].
When monitoring a multiple CPU system	Set the CPU No. to any of [1] to [4].
When GT SoftGOT2000 on the PC CPU module is connected using the bus connection	Do not specify 0 for [CPU No.]. When 0 is specified, the monitoring target is set to the PC CPU module that cannot be monitored.
When monitoring an inverter	Set the CPU No. to [0].

To specify a CPU number with the value of a GOT data register (GD), refer to the following.

☞ Page 1387 Indirect specification of a CPU number

■Indirect specification of a CPU number

To set a GOT data register (GD) to specify a CPU number, set [CPU No. switching GD device first No. (3 points)] in the [Controller Setting] window.

For the details, refer to the following.

📖GT Designer3 (GOT2000) Screen Design Manual

In GT SoftGOT2000, set [CPU No. switching GD device first No. (3 points)] in the [Communication Setup] dialog.

📖GT SoftGOT2000 Version1 Operating Manual

The following shows the correspondence between CPU numbers and GOT data registers (GD).

Example) When 500 is set to [CPU No. switching GD device first No. (3 points)]

Three consecutive devices, starting from GD500, are set to specify CPU numbers.

CPU number	GOT data registers (GD)	Setting range
100	GD500	[1] to [4] (Setting an invalid value causes a communication timeout error.)
101	GD501	
102	GD502	

Upon the GOT startup, 0 is stored in the specified GD devices until values are set.

If you set the GD devices on the screen that appears upon the GOT startup, a communication timeout error occurs.

To avoid such situation, set the GD devices so that their values are retained at a power failure.

For the details, refer to the following.

📖GT Designer3 (GOT2000) Screen Design Manual

When specifying GD devices for multiple channels, set different GD devices to [CPU No. switching GD device first No. (3 points)].

GD10 to GD25 are used to specify the monitoring targets, such as the station number of an inverter.

When setting GD devices for a different channel, set different GD devices to [CPU No. switching GD device first No. (3 points)].

Do not change the value of the specified device while a touch switch with the bit momentary is being pressed.

Doing so may cause the touch switch to exhibit unintended behavior.

Network setting for connection to the Mitsubishi Electric servo amplifier

Example) Device setting dialog of [MELSERVO-J4-*A-RJ]

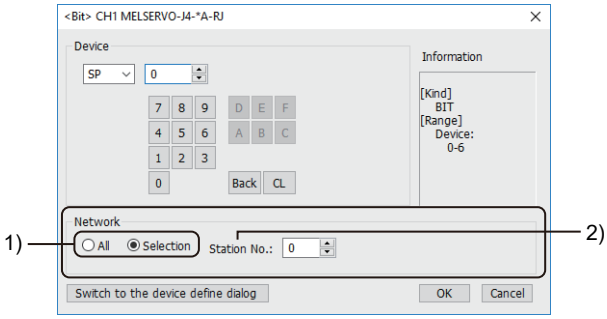

1) Monitor target specification

Set the monitoring target of the set device.

Item	Description
[All]	Select this item when writing data to all servo amplifiers connected. During a monitoring, the servo amplifier of the station No. 0 is monitored. When inputting data by the numerical input, the data is written to all servo amplifiers connected during inputting and the servo amplifier of the station No. 0 is monitored during other than inputting (displaying). When [All] is selected for a device, network No. 0 and station No. FF are displayed in the device list window and the printed report.
[Selection]	Specify the station number of a servo amplifier to be monitored.

2) [Station No.]

This item appears when [Selection] is selected for the monitor target specification.

The setting range is [0] to [31] (direct) or [100] to [115] (indirect).

For indirect specification of a station number, refer to the following.

☞ Page 1388 Indirect specification of a station number (for connection to a servo amplifier)

For the network settings of [MELSERVO-JE-*C] and [MELSERVO-J5(W)-*G(-RJ), -JET-*G], refer to the following.

☞ Page 1389 For the network settings of [MELSERVO-JE-*C] and [MELSERVO-J5(W)-*G(-RJ), -JET-*G]

■Indirect specification of a station number (for connection to a servo amplifier)

When you specify any of 100 to 115 for the station number, the value of the corresponding GOT data register (GD10 to GD25) is used as the station number.

The following shows the correspondence between station number setting values and GOT data registers (GD).

Station No.	GOT data registers (GD)	Setting range
100	GD10	[0] to [31] Setting a value outside the range causes a timeout error.
101	GD11	
:	:	
114	GD24	
115	GD25	

■For the network settings of [MELSERVO-JE-*C] and [MELSERVO-J5(W)-*G(-RJ), -JET-*G]

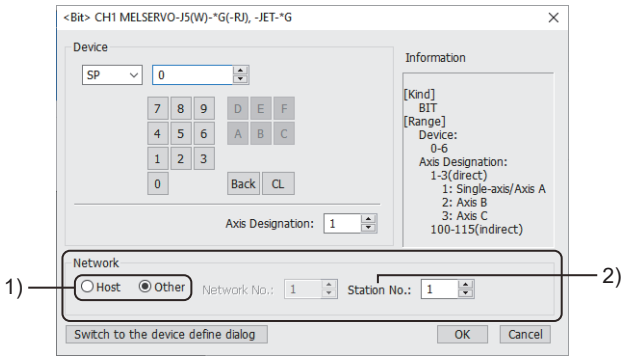

1) Station type specification

Select the station type (host or other) for the controller to be monitored.

- [Host]: The controller to be monitored is the host station.
- [Other]: The controller to be monitored is not the host station.

2) [Station No.]

This item appears when [Other] is selected for the station type.

Specify a station number.

A

Network setting for connection to the Mitsubishi Electric inverter

☞ Page 1390 Network setting for [FREQROL 500/700/800, SENSORLESS SERVO]
☞ Page 1391 Network setting for [FREQROL 800]
☞ Page 1392 Network setting for [FREQROL 800/E700NE(Batch monitor)]

■Network setting for [FREQROL 500/700/800, SENSORLESS SERVO]

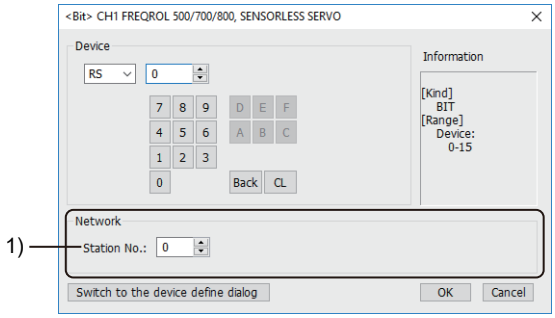

1) [Station No.]

Set the station number of the inverter to be monitored.

The setting range is [0] to [31] (direct) or [100] to [115] (indirect).

For indirect specification of a station number, refer to the following.

☞ Page 1390 Indirect specification of a station number (for connecting an inverter)

■Indirect specification of a station number (for connecting an inverter)

When you specify any of 100 to 115 for the station number, the value of the corresponding GOT data register (GD10 to GD25) is used as the station number.

The following shows the correspondence between station number setting values and GOT data registers (GD).

Station No.	GOT data registers (GD)	Setting range
100	GD10	[0] to [31] Setting a value outside the above range causes a device range error.
101	GD11	
:	:	
114	GD24	
115	GD25	

Do not change the value of the specified device while a touch switch with the bit momentary is being pressed.

Doing so may cause the touch switch to exhibit unintended behavior.

■Network setting for [FREQROL 800]

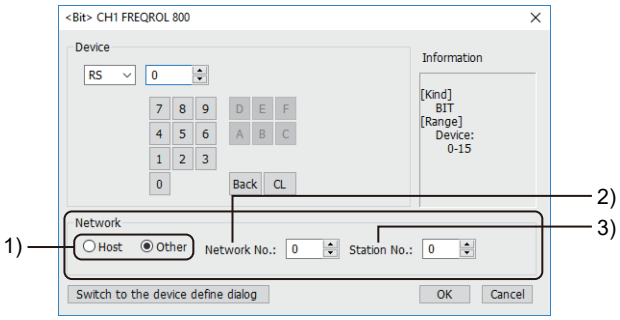

1) Station type specification

Select the station type (host or other) for the controller to be monitored.

- [Host]: The controller to be monitored is the host station.
- [Other]: The controller to be monitored is not the host station.

2) [Network No.]

This item appears when [Other] is selected for the station type.

The setting depends on the connection type between the GOT and the inverter.

Connection type	Description
Serial communication connection	[Network No.] is not used.
Ethernet connection	Specify a network number. The setting range is [1] to [239].

3) [Station No.]

This item appears when [Other] is selected for the station type.

Set the station number of the inverter to be monitored.

The setting depends on the connection type between the GOT and the inverter.

Connection type	Description
Serial communication connection	The setting range is [0] to [31] (direct) or [100] to [115] (indirect). For indirect specification of a station number, refer to the following. ☞ Page 1390 Indirect specification of a station number (for connecting an inverter)
Ethernet connection	The setting range is [1] to [120].

A

■Network setting for [FREQROL 800/E700NE(Batch monitor)]

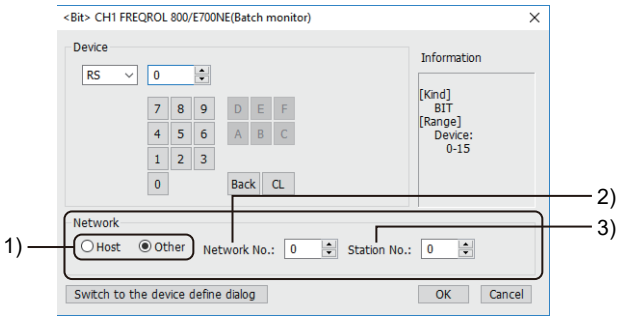

1) Station type specification

Select the station type (host or other) for the controller to be monitored.

- [Host]: The controller to be monitored is the host station.
- [Other]: The controller to be monitored is not the host station.

2) [Network No.]

This item appears when [Other] is selected for the station type.

Specify a network number.

The setting range is [1] to [239].

3) [Station No.]

This item appears when [Other] is selected for the station type.

Set the station number of the inverter to be monitored.

The setting range is [1] to [120].

[MELSEC iQ-R, RnMT/NC/RT, CR800-D], [MELSEC iQ-R, RnMT/RT, CR800-D]

GT27 GT25 GT23 GT21 GS25 GS21

Item	Reference
Specifications of bit devices	☞ Page 1393 Monitoring-supported bit devices ([MELSEC iQ-R, RnMT/NC/RT, CR800-D], [MELSEC iQ-R, RnMT/RT, CR800-D])
	☞ Page 1396 Setting virtual bit devices for servo amplifiers ([MELSEC iQ-R, RnMT/NC/RT, CR800-D], [MELSEC iQ-R, RnMT/RT, CR800-D])
	☞ Page 1400 Availability of writing/reading data to/from bit devices ([MELSEC iQ-R, RnMT/NC/RT, CR800-D], [MELSEC iQ-R, RnMT/RT, CR800-D])
Specifications of word devices	☞ Page 1402 Monitoring-supported word devices ([MELSEC iQ-R, RnMT/NC/RT, CR800-D], [MELSEC iQ-R, RnMT/RT, CR800-D])
	☞ Page 1406 Setting virtual word devices for servo amplifiers ([MELSEC iQ-R, RnMT/NC/RT, CR800-D], [MELSEC iQ-R, RnMT/RT, CR800-D])
	☞ Page 1411 Availability of writing/reading data to/from word devices ([MELSEC iQ-R, RnMT/NC/RT, CR800-D], [MELSEC iQ-R, RnMT/RT, CR800-D])
Specifications of double-word devices	☞ Page 1413 Monitoring-supported double-word devices ([MELSEC iQ-R, RnMT/NC/RT, CR800-D], [MELSEC iQ-R, RnMT/RT, CR800-D])
	☞ Page 1414 Setting virtual double-word devices for servo amplifiers ([MELSEC iQ-R, RnMT/NC/RT, CR800-D], [MELSEC iQ-R, RnMT/RT, CR800-D])
	☞ Page 1415 Availability of writing/reading data to/from double-word devices ([MELSEC iQ-R, RnMT/NC/RT, CR800-D], [MELSEC iQ-R, RnMT/RT, CR800-D])
Specifications of virtual servo amplifier devices	☞ Page 1416 Virtual servo amplifier devices ([MELSEC iQ-R, RnMT/NC/RT, CR800-D], [MELSEC iQ-R, RnMT/RT, CR800-D])
	☞ Page 1468 Precautions for virtual servo amplifier devices ([MELSEC iQ-R, RnMT/NC/RT, CR800-D], [MELSEC iQ-R, RnMT/RT, CR800-D])
Specifications of virtual inverter devices	☞ Page 1469 Virtual inverter devices ([MELSEC iQ-R, RnMT/NC/RT, CR800-D], [MELSEC iQ-R, RnMT/RT, CR800-D])

A

Monitoring-supported bit devices ([MELSEC iQ-R, RnMT/NC/RT, CR800-D], [MELSEC iQ-R, RnMT/RT, CR800-D])

The following table shows monitoring-supported bit devices.

To check whether writing/reading data to/from each device is available, refer to the following.

☞ Page 1400 Availability of writing/reading data to/from bit devices ([MELSEC iQ-R, RnMT/NC/RT, CR800-D], [MELSEC iQ-R, RnMT/RT, CR800-D])

○: Available

×: Not available

Device name		Device No. representation	Setting range	Specifications of EG devices*1	
				Assignment to EG devices	Access using a client
X	Input relay	Hexadecimal	0000 to 3FFF	○	○
Y	Output relay	Hexadecimal	0000 to 3FFF	○	○
B*4	Link relay	Hexadecimal	0000000 to 9A61FFF	○	○
M*4	Internal relay	Decimal	0 to 161882111	○	○
L	Latch relay	Decimal	0 to 32767	○	○
S*5	Step relay	Decimal	0 to 16383	×	×
F	Annunciator	Decimal	0 to 131071	○	○
TC*4	Timer coil	Decimal	0 to 8993439	○	○ (Not usable as word data)
TT*4	Timer contact	Decimal	0 to 8993439	○	○ (Not usable as word data)

Device name		Device No. representation	Setting range	Specifications of EG devices[*1]	
				Assignment to EG devices	Access using a client
CC[*4]	Counter coil	Decimal	0 to 8993439	○	○ (Not usable as word data)
CT[*4]	Counter contact	Decimal	0 to 8993439	○	○ (Not usable as word data)
SC[*4]	Retentive timer coil	Decimal	0 to 8993439	○	○ (Not usable as word data)
SS[*4]	Retentive timer contact	Decimal	0 to 8993439	○	○ (Not usable as word data)
SB[*4]	Link special relay	Hexadecimal	0000000 to 9A61FFF	○	○
SM	Special relay	Decimal	0 to 4095	○	○
RX	Remote input	Hexadecimal	0000 to 3FFF	○	○
RY	Remote output	Hexadecimal	0000 to 3FFF	○	○
LB	Link relay	Hexadecimal	0000 to 7FFF	○	○
LTC[*4]	Long timer coil	Decimal	0 to 2529407	○	○ (Not usable as word data)
LTT[*4]	Long timer contact	Decimal	0 to 2529407	○	○ (Not usable as word data)
LCC[*4]	Long counter coil	Decimal	0 to 4761215	○	○ (Not usable as word data)
LCT[*4]	Long counter contact	Decimal	0 to 4761215	○	○ (Not usable as word data)
LSC[*4]	Long retentive timer coil	Decimal	0 to 2529407	○	○ (Not usable as word data)
LSS[*4]	Long retentive timer contact	Decimal	0 to 2529407	○	○ (Not usable as word data)
SAX	Safety input relay	Hexadecimal	0000 to 2FFF	×	×
SAY	Safety output relay	Hexadecimal	0000 to 2FFF	×	×
SAB	Safety link relay	Hexadecimal	00000 to 9BFFF	×	×
SAM	Safety internal relay	Decimal	0 to 638975	×	×
SATC	Safety timer coil	Decimal	0 to 35487	×	×
SATT	Safety timer contact	Decimal	0 to 35487	×	×
SACC	Safety counter coil	Decimal	0 to 35487	×	×
SACT	Safety counter contact	Decimal	0 to 35487	×	×
SASC	Safety retentive timer coil	Decimal	0 to 35487	×	×
SASS	Safety retentive timer contact	Decimal	0 to 35487	×	×
SASM	Safety special relay	Decimal	0 to 4095	×	×
BL	SFC block	Decimal	0 to 319	×	×
BLS	Step relay (block)	Decimal	BL(SFC Block No.)-S(Device) Notation example: BL1-S3 • SFC Block No. (decimal): 0 to 319 • Device (decimal): 0 to 511	×	×
SP[*2]	Servo amplifier request	Decimal	☞ Page 1396 Setting virtual bit devices for servo amplifiers ([MELSEC iQ-R, RnMT/NC/RT, CR800-D], [MELSEC iQ-R, RnMT/RT, CR800-D])	×	×

Device name		Device No. representation	Setting range	Specifications of EG devices*1	
				Assignment to EG devices	Access using a client
OM*2	Operation mode selection	Decimal	☞ Page 1396 Setting virtual bit devices for servo amplifiers ([MELSEC iQ-R, RnMT/NC/RT, CR800-D], [MELSEC iQ-R, RnMT/RT, CR800-D])	×	×
TMB*2	Instruction demand (for test operation)	Decimal	☞ Page 1396 Setting virtual bit devices for servo amplifiers ([MELSEC iQ-R, RnMT/NC/RT, CR800-D], [MELSEC iQ-R, RnMT/RT, CR800-D])	×	×
OTI*2	One-touch tuning instruction	Decimal	☞ Page 1396 Setting virtual bit devices for servo amplifiers ([MELSEC iQ-R, RnMT/NC/RT, CR800-D], [MELSEC iQ-R, RnMT/RT, CR800-D])	×	×
GFDI*2	Gear failure diagnosis instruction	Decimal	☞ Page 1396 Setting virtual bit devices for servo amplifiers ([MELSEC iQ-R, RnMT/NC/RT, CR800-D], [MELSEC iQ-R, RnMT/RT, CR800-D])	×	×
ECCDI*2	Encoder communication circuit diagnosis instruction	Decimal	☞ Page 1396 Setting virtual bit devices for servo amplifiers ([MELSEC iQ-R, RnMT/NC/RT, CR800-D], [MELSEC iQ-R, RnMT/RT, CR800-D])	×	×
JnX	Link input (link direct)	Hexadecimal	J(Network No.n)-X(Device) Notation example: J1-X0000 • Network No.n (decimal): 1 to 239 • Device (hexadecimal): 0000 to 3FFF	○	○
JnY	Link output (link direct)	Hexadecimal	J(Network No.n)-Y(Device) Notation example: J1-Y0000 • Network No.n (decimal): 1 to 239 • Device (hexadecimal): 0000 to 3FFF	○	○
JnB	Link relay (link direct)	Hexadecimal	J(Network No.n)-B(Device) Notation example: J1-B0000 • Network No.n (decimal): 1 to 239 • Device (hexadecimal): 0000 to 7FFF*6	○	○
JnSB	Link special relay (link direct)	Hexadecimal	J(Network No.n)-SB(Device) Notation example: J1-SB000 • Network No.n (decimal): 1 to 239 • Device (hexadecimal): 000 to FFF	○	○
IOST*3	I/O terminal monitor	Decimal	0 to 127	×	×
CMD*3	Operation command	Decimal	0 to 63	×	×

*1 For the devices assigned to EG devices (gateway devices) and the compatible clients, refer to the following.
📖GT Designer3 (GOT2000) Screen Design Manual

*2 Virtual servo amplifier device
For the details, refer to the following.
☞ Page 1416 Virtual servo amplifier devices ([MELSEC iQ-R, RnMT/NC/RT, CR800-D], [MELSEC iQ-R, RnMT/RT, CR800-D])

*3 Virtual inverter device
For the details, refer to the following.
☞ Page 1469 Virtual inverter devices ([MELSEC iQ-R, RnMT/NC/RT, CR800-D], [MELSEC iQ-R, RnMT/RT, CR800-D])

*4 For the maximum number of devices when an extended SRAM cassette is installed, refer to the following.
📖MELSEC iQ-R CPU Module User's Manual (Application)

*5 If a bit-specified word device is used in the random read processing, GT SoftGOT2000 (Single channel) or GT Simulator3 uses the value of the bit device in block No. 0 only.
The bit device status depends on the SFC program status (active or inactive). When the SFC program is inactive, the bit device is off (stores 0).
If a step relay (S) is used in the random read processing, specify the relevant step relay (block) (BLS) on GT SoftGOT2000 or GT Simulator3.

*6 The device range for a PLC with the CC-Link IE TSN master/local module (1000BASE-SX model) (RJ71GN11-SX) installed is 00000 to 1FFFF.

Setting virtual bit devices for servo amplifiers ([MELSEC iQ-R, RnMT/NC/RT, CR800-D], [MELSEC iQ-R, RnMT/RT, CR800-D])

For virtual servo amplifier devices, the notation differs according to the connection type between the GOT and the servo amplifier.

Select one of the following according to the control type in the device setting dialog.

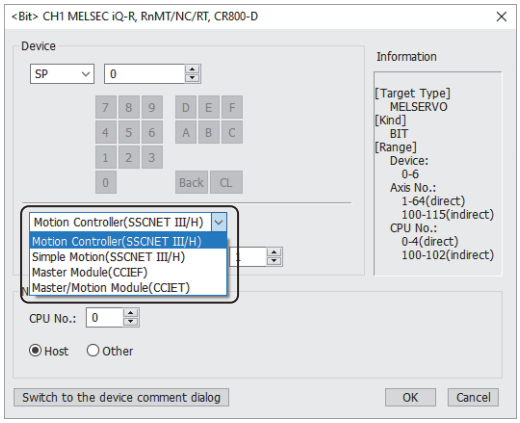

Item	Description
[Motion Controller(SSCNET III/H)]	Select this item to connect the GOT through a Motion controller. The following item is displayed. • [Axis No.]: Set the axis number to be monitored.
[Simple Motion(SSCNET III/H)]	Select this item to connect the GOT through a Simple Motion module (RD77MS). The following items are displayed. • [Unit No.]: Set the first 2 digits of the 3-digit number that represents the start I/O number of the Simple Motion module. • [Axis No.]: Set the axis number to be monitored.
[Master Module(CCIEF)]	Select this item to connect the GOT through the master station on the CC-Link IE Field Network or a Simple Motion module (RD77GF).
[Master/Motion Module(CCIET)]	Select this item to connect the GOT through the master station on the CC-Link IE TSN and a Motion module (RD78G(H)). After the selection, set a device that enables axis designation to display the following item. • [Axis Designation]: Set the axis to be monitored.

The following shows the notation and setting range of virtual devices.

Device name	Device notation and setting range		Notation example
SP	[Motion Controller(SSCNET III/H)]	A(Axis No.)-SP(Device) • Axis No. (decimal): 1 to 64 (direct), 100 to 115 (indirect) • Device (decimal): 0 to 6	A64-SP0
	[Simple Motion(SSCNET III/H)]	U(Unit No.)-A(Axis No.)-SP(Device) • Unit No. (hexadecimal): 00 to FF (direct), 100 to 10F (indirect) • Axis No. (decimal): 1 to 64 (direct), 100 to 115 (indirect) • Device (decimal): 0 to 6	UFF-A64-SP0
	[Master Module(CCIEF)]	SP(Device) • Device (decimal): 0 to 6	SP0
	[Master/Motion Module(CCIET)]	AA(Axis designation)-SP(Device) • Axis designation (decimal): 1 to 3 (direct), 100 to 115 (indirect) • Device (decimal): 0 to 6	AA3-SP0

Device name	Device notation and setting range		Notation example
OM	[Motion Controller(SSCNET III/H)]	A(Axis No.)-OM(Device) • Axis No. (decimal): 1 to 64 (direct), 100 to 115 (indirect) • Device (decimal): 0 to 2, 4 to 5	A64-OM0
	[Simple Motion(SSCNET III/H)]	U(Unit No.)-A(Axis No.)-OM(Device) • Unit No. (hexadecimal): 00 to FF (direct), 100 to 10F (indirect) • Axis No. (decimal): 1 to 64 (direct), 100 to 115 (indirect) • Device (decimal): 0 to 2, 4 to 5	UFF-A64-OM0
	[Master Module(CCIEF)]	OM(Device) • Device (decimal): 0 to 2, 4 to 5	OM0
	[Master/Motion Module(CCIET)]	AA(Axis designation)-OM(Device) • Axis designation (decimal): 1 to 3 (direct), 100 to 115 (indirect) • Device (decimal): 0 to 2, 4 to 5	AA3-OM0
TMB	[Motion Controller(SSCNET III/H)]	A(Axis No.)-TMB(Device) • Axis No. (decimal): 1 to 64 (direct), 100 to 115 (indirect) • Device (decimal): 1 to 6	A64-TMB1
	[Simple Motion(SSCNET III/H)]	U(Unit No.)-A(Axis No.)-TMB(Device) • Unit No. (hexadecimal): 00 to FF (direct), 100 to 10F (indirect) • Axis No. (decimal): 1 to 64 (direct), 100 to 115 (indirect) • Device (decimal): 1 to 6	UFF-A64-TMB1
	[Master Module(CCIEF)]	TMB(Device) • Device (decimal): 1 to 6	TMB1
	[Master/Motion Module(CCIET)]	AA(Axis designation)-TMB(Device) • Axis designation (decimal): 1 to 3 (direct), 100 to 115 (indirect) • Device (decimal): 1 to 6	AA3-TMB1
OTI	[Motion Controller(SSCNET III/H)]	A(Axis No.)-OTI(Device) • Axis No. (decimal): 1 to 64 (direct), 100 to 115 (indirect) • Device (decimal): 0 to 5	A64-OTI0
	[Simple Motion(SSCNET III/H)]	U(Unit No.)-A(Axis No.)-OTI(Device) • Unit No. (hexadecimal): 00 to FF (direct), 100 to 10F (indirect) • Axis No. (decimal): 1 to 64 (direct), 100 to 115 (indirect) • Device (decimal): 0 to 5	UFF-A64-OTI0
	[Master Module(CCIEF)]	OTI(Device) • Device (decimal): 0 to 5	OTI0
	[Master/Motion Module(CCIET)]	AA(Axis designation)-OTI(Device) • Axis designation (decimal): 1 to 3 (direct), 100 to 115 (indirect) • Device (decimal): 0 to 5	AA3-OTI0
GFDI	[Motion Controller(SSCNET III/H)]	A(Axis No.)-GFDI(Device) • Axis No. (decimal): 1 to 64 (direct), 100 to 115 (indirect) • Device (decimal): 0 to 1	A64-GFDI1
	[Simple Motion(SSCNET III/H)]	U(Unit No.)-A(Axis No.)-GFDI(Device) • Unit No. (hexadecimal): 00 to FF (direct), 100 to 10F (indirect) • Axis No. (decimal): 1 to 64 (direct), 100 to 115 (indirect) • Device (decimal): 0 to 1	UFF-A64-GFDI1
	[Master/Motion Module(CCIET)]	AA(Axis designation)-GFDI(Device) • Axis designation (decimal): 1 to 3 (direct), 100 to 115 (indirect) • Device (decimal): 0 to 1	AA3-GFDI0
ECCDI	[Motion Controller(SSCNET III/H)]	A(Axis No.)-ECCDI(Device) • Axis No. (decimal): 1 to 64 (direct), 100 to 115 (indirect) • Device (decimal): 0 to 1	A64-ECCDI1
	[Simple Motion(SSCNET III/H)]	U(Unit No.)-A(Axis No.)-ECCDI(Device) • Unit No. (hexadecimal): 00 to FF (direct), 100 to 10F (indirect) • Axis No. (decimal): 1 to 64 (direct), 100 to 115 (indirect) • Device (decimal): 0 to 1	UFF-A64-ECCDI1
	[Master/Motion Module(CCIET)]	AA(Axis designation)-ECCDI(Device) • Axis designation (decimal): 1 to 3 (direct), 100 to 115 (indirect) • Device (decimal): 0 to 1	AA3-ECCDI0

For indirect specification of a module number, axis number, or axis designation, refer to the following.

☞ Page 1398 Indirect specification of a module number ([MELSEC iQ-R, RnMT/NC/RT, CR800-D], [MELSEC iQ-R, RnMT/RT, CR800-D])

☞ Page 1399 Indirect specification of an axis number or axis designation ([MELSEC iQ-R, RnMT/NC/RT, CR800-D], [MELSEC iQ-R, RnMT/RT, CR800-D])

■Indirect specification of a module number ([MELSEC iQ-R, RnMT/NC/RT, CR800-D], [MELSEC iQ-R, RnMT/RT, CR800-D])

To set a GOT data register to specify a module number, set [Module No. switching GD device first No. (16 points)] in the [Controller Setting] window.

For the details, refer to the following.

📖GT Designer3 (GOT2000) Screen Design Manual

In GT SoftGOT2000, set [Module No. switching GD device first No. (16 points)] in the [Communication Setup] dialog.

📖GT SoftGOT2000 Version1 Operating Manual

The following shows the correspondence between module numbers and GOT data registers (GD).

Example) When 550 is set to [Module No. switching GD device first No. (16 points)]

Sixteen consecutive devices, starting from GD550, are set to specify module numbers.

Module No.	GOT data registers (GD)	Setting range
100	GD550	[000] to [0FF] ([001] to [010] when [MELSEC iQ-F] is selected for [Controller Type] in the [Controller Setting] window) Setting a value outside the above range causes a device range error.
101	GD551	
:	:	
10E	GD564	
10F	GD565	

Upon the GOT startup, 0 is stored in the specified GD devices until values are set.

If you set the GD devices on the screen that appears upon the GOT startup, module No.0 is monitored unintentionally, or a device range error occurs.

To avoid such situation, set the GD devices so that their values are retained at a power failure.

For the details, refer to the following.

📖GT Designer3 (GOT2000) Screen Design Manual

When setting GD devices for multiple channels, set different GD devices to [Module No. switching GD device first No. (16 points)].

GD10 to GD25 are used to specify the monitoring targets, such as the station number of an inverter.

When setting GD devices for a different channel, set different GD devices to [Module No. switching GD device first No. (16 points)].

Do not change the value of the specified device while a touch switch with the bit momentary is being pressed.

Doing so may cause the touch switch to exhibit unintended behavior.

■Indirect specification of an axis number or axis designation ([MELSEC iQ-R, RnMT/NC/RT, CR800-D], [MELSEC iQ-R, RnMT/RT, CR800-D])

To use GOT data registers (GD) to specify an axis number or axis designation, set [Servo axis switching GD device first No. (16 points)] in the [Controller Setting] window.

For the details, refer to the following.

📖GT Designer3 (GOT2000) Screen Design Manual

In GT SoftGOT2000, set [Servo axis switching GD device first No. (16 points)] in the [Communication Setup] dialog.

📖GT SoftGOT2000 Version1 Operating Manual

The following shows the relationship between the axis number or axis designation and the GOT data register (GD).

Example) When 10 is set to [Servo axis switching GD device first No. (16 points)]

Sixteen consecutive devices, starting from GD10, are set to specify an axis number.

Axis No. or axis designation	GOT data registers (GD)	Setting range
100	GD10	• Axis number [1] to [64] • Axis designation [1]: Single-axis/Axis A [2]: Axis B [3]: Axis C Setting a value outside the above range causes a device range error.
101	GD11	
:	:	
114	GD24	
115	GD25	

Upon the GOT startup, 0 is stored in the specified GD devices until values are set.

If you set the GD devices on the screen that appears upon the GOT startup, a device range error occurs.

To avoid such situation, set the GD devices so that their values are retained at a power failure.

For the details, refer to the following.

📖GT Designer3 (GOT2000) Screen Design Manual

When specifying GD devices for multiple channels, set different GD devices to [CPU No. switching GD device first No. (3 points)].

GD10 to GD25 are used to specify the monitoring targets, such as the station number of an inverter.

When setting GD devices for a different channel, set different GD devices to [Servo axis switching GD device first No. (16 points)].

Do not change the value of the specified device while a touch switch with the bit momentary is being pressed.

Doing so may cause the touch switch to exhibit unintended behavior.

Availability of writing/reading data to/from bit devices ([MELSEC iQ-R, RnMT/NC/RT, CR800-D], [MELSEC iQ-R, RnMT/RT, CR800-D])

The following shows whether writing/reading data to/from bit devices is available by device type.

When the device type is other than the bit type, set the device No. in multiples of 16.

R/W: Both read and write

R/-: Read only

-/W: Write only

-/-: No read/write access

Device name	Device type				
	Bit	Byte (8 bits)	Word (16 bits)	Double-word (32 bits)	Quad-word (64 bits)
X	R/W	-/-	R/W	R/W	-/-
Y	R/W	-/-	R/W	R/W	-/-
B	R/W	-/-	R/W	R/W	-/-
M	R/W	-/-	R/W	R/W	-/-
L	R/W	-/-	R/W	R/W	-/-
S	R/-	-/-	R/-	R/-	-/-
F	R/W	-/-	R/W	R/W	-/-
TC	R/W	-/-	-/-	-/-	-/-
TT	R/W	-/-	-/-	-/-	-/-
CC	R/W	-/-	-/-	-/-	-/-
CT	R/W	-/-	-/-	-/-	-/-
SC	R/W	-/-	-/-	-/-	-/-
SS	R/W	-/-	-/-	-/-	-/-
SB	R/W	-/-	R/W	R/W	-/-
SM	R/W	-/-	R/W	R/W	-/-
RX	R/W	-/-	R/W	R/W	-/-
RY	R/W	-/-	R/W	R/W	-/-
LB	R/W	-/-	R/W	R/W	-/-
LTC	R/W	-/-	-/-	-/-	-/-
LTT	R/W	-/-	-/-	-/-	-/-
LCC	R/W	-/-	-/-	-/-	-/-
LCT	R/W	-/-	-/-	-/-	-/-
LSC	R/W	-/-	-/-	-/-	-/-
LSS	R/W	-/-	-/-	-/-	-/-
SAX	R/-	-/-	R/-	R/-	-/-
SAY	R/-	-/-	R/-	R/-	-/-
SAB	R/-	-/-	R/-	R/-	-/-
SAM	R/-	-/-	R/-	R/-	-/-
SATC	R/-	-/-	-/-	-/-	-/-
SATT	R/-	-/-	-/-	-/-	-/-
SACC	R/-	-/-	-/-	-/-	-/-
SACT	R/-	-/-	-/-	-/-	-/-
SASC	R/-	-/-	-/-	-/-	-/-
SASS	R/-	-/-	-/-	-/-	-/-
SASM	R/-	-/-	R/-	R/-	-/-
BL	R/W	-/-	-/-	-/-	-/-
BLS	R/W	-/-	-/-	-/-	-/-
SP	-/W	-/-	-/-	-/-	-/-
OM	-/W	-/-	-/-	-/-	-/-
TMB	-/W	-/-	-/-	-/-	-/-
OTI	-/W	-/-	-/-	-/-	-/-
GFDI	-/W	-/-	-/-	-/-	-/-

Device name	Device type				
	Bit	Byte (8 bits)	Word (16 bits)	Double-word (32 bits)	Quad-word (64 bits)
ECCDI	-/W	-/-	-/-	-/-	-/-
JnX	R/W	-/-	R/W	R/W	-/-
JnY	R/W	-/-	R/W	R/W	-/-
JnB	R/W	-/-	R/W	R/W	-/-
JnSB	R/W	-/-	R/W	R/W	-/-
IOST	R/-	-/-	-/-	-/-	-/-
CMD	-/W	-/-	-/-	-/-	-/-

A

Monitoring-supported word devices ([MELSEC iQ-R, RnMT/NC/RT, CR800-D], [MELSEC iQ-R, RnMT/RT, CR800-D])

The following table shows monitoring-supported word devices.

To check whether writing/reading data to/from each device is available, refer to the following.

☞ Page 1411 Availability of writing/reading data to/from word devices ([MELSEC iQ-R, RnMT/NC/RT, CR800-D], [MELSEC iQ-R, RnMT/RT, CR800-D])

○: Available

×: Not available

Device name		Device No. representation	Setting range	Specifications of EG devices*1	
				Assignment to EG devices	Access using a client
TN*4	Timer current value	Decimal	0 to 8993439	○	○
CN*4	Counter current value	Decimal	0 to 8993439	○	○
SN*4	Retentive timer current value	Decimal	0 to 8993439	○	○
D*4	Data register	Decimal	0 to 10117631	○	○
SD	Special register	Decimal	0 to 4095	○	○
W*4	Link register	Hexadecimal	000000 to 9A61FF	○	○
SW*4	Link special register	Hexadecimal	000000 to 9A61FF	○	○
R	File register	Decimal	0 to 32767	○	○
ER	Extension file register(Block)	Decimal	ER(R block)-(Device) Notation example: ER255-100 • R block (decimal): 0 to 255 • Device (decimal): 0 to 32767	○	○
ZR*4	Extension file register	Decimal	0 to 10027007	○	○
Z	Index register	Decimal	0 to 23	○	○ (Not usable as bit data)
G	Buffer memory (Intelligent function module)	Decimal	U(Unit No.)-G(Device) Notation example: UFF-G100 • Unit No. (hexadecimal): 00 to FF • Device (decimal): 0 to 268435455 For the module No., set the first 2 digits of the 3-digit number that represents the start I/O number of the buffer memory for the intelligent function module.	○	○
Ww*3	Remote register	Hexadecimal	0000 to 1FFF	○	○
Wr*3	Remote register	Hexadecimal	0000 to 1FFF	○	○
LW	Link register	Hexadecimal	00000 to 1FFFF	○	○
#	Motion device	Decimal	0 to 108287	○	○
U3E0*5	Multiple CPU high speed transmission memory	Decimal	0 to 12287	○	○
U3E1*5	Multiple CPU high speed transmission memory	Decimal	0 to 12287	○	○
U3E2*5	Multiple CPU high speed transmission memory	Decimal	0 to 12287	○	○
U3E3*5	Multiple CPU high speed transmission memory	Decimal	0 to 12287	○	○
SATN	Safety timer (current value)	Decimal	0 to 35487	×	×
SACN	Safety counter (current value)	Decimal	0 to 35487	×	×
SASN	Safety retentive timer (current value)	Decimal	0 to 35487	×	×
SAD	Safety data register	Decimal	0 to 39935	×	×
SASD	Safety special register	Decimal	0 to 4095	×	×
SAW	Safety link register	Hexadecimal	0000 to 9BFF	×	×
PA*2	Basic parameter	Decimal	☞ Page 1406 Setting virtual word devices for servo amplifiers ([MELSEC iQ-R, RnMT/NC/RT, CR800-D], [MELSEC iQ-R, RnMT/RT, CR800-D])	×	×

Device name		Device No. representation	Setting range	Specifications of EG devices[*1]	
				Assignment to EG devices	Access using a client
PB[*2]	Gain filter parameter	Decimal	☞ Page 1406 Setting virtual word devices for servo amplifiers ([MELSEC iQ-R, RnMT/NC/RT, CR800-D], [MELSEC iQ-R, RnMT/RT, CR800-D])	×	×
PC[*2]	Extension setting parameter	Decimal	☞ Page 1406 Setting virtual word devices for servo amplifiers ([MELSEC iQ-R, RnMT/NC/RT, CR800-D], [MELSEC iQ-R, RnMT/RT, CR800-D])	×	×
PD[*2]	I/O setting parameter	Decimal	☞ Page 1406 Setting virtual word devices for servo amplifiers ([MELSEC iQ-R, RnMT/NC/RT, CR800-D], [MELSEC iQ-R, RnMT/RT, CR800-D])	×	×
PO[*2]	Option unit parameter	Decimal	☞ Page 1406 Setting virtual word devices for servo amplifiers ([MELSEC iQ-R, RnMT/NC/RT, CR800-D], [MELSEC iQ-R, RnMT/RT, CR800-D])	×	×
PS[*2]	Special parameter	Decimal	☞ Page 1406 Setting virtual word devices for servo amplifiers ([MELSEC iQ-R, RnMT/NC/RT, CR800-D], [MELSEC iQ-R, RnMT/RT, CR800-D])	×	×
PU[*2]	Multi encoder parameter	Decimal	☞ Page 1406 Setting virtual word devices for servo amplifiers ([MELSEC iQ-R, RnMT/NC/RT, CR800-D], [MELSEC iQ-R, RnMT/RT, CR800-D])	×	×
PT[*2]	Positioning control parameter	Decimal	☞ Page 1406 Setting virtual word devices for servo amplifiers ([MELSEC iQ-R, RnMT/NC/RT, CR800-D], [MELSEC iQ-R, RnMT/RT, CR800-D])	×	×
PL[*2*6]	Motor extension parameter Linear servo motor/DD motor setting parameter	Decimal	☞ Page 1406 Setting virtual word devices for servo amplifiers ([MELSEC iQ-R, RnMT/NC/RT, CR800-D], [MELSEC iQ-R, RnMT/RT, CR800-D])	×	×
PN[*2]	Network setting parameter	Decimal	☞ Page 1406 Setting virtual word devices for servo amplifiers ([MELSEC iQ-R, RnMT/NC/RT, CR800-D], [MELSEC iQ-R, RnMT/RT, CR800-D])	×	×
PVS[*2*7]	Position extension parameter	Decimal	☞ Page 1406 Setting virtual word devices for servo amplifiers ([MELSEC iQ-R, RnMT/NC/RT, CR800-D], [MELSEC iQ-R, RnMT/RT, CR800-D])	×	×
ST[*2]	Status display	Decimal	☞ Page 1406 Setting virtual word devices for servo amplifiers ([MELSEC iQ-R, RnMT/NC/RT, CR800-D], [MELSEC iQ-R, RnMT/RT, CR800-D])	×	×
PE[*2]	Extension setting No.2 parameter	Decimal	☞ Page 1406 Setting virtual word devices for servo amplifiers ([MELSEC iQ-R, RnMT/NC/RT, CR800-D], [MELSEC iQ-R, RnMT/RT, CR800-D])	×	×
PF[*2]	Extension setting No.3 parameter	Decimal	☞ Page 1406 Setting virtual word devices for servo amplifiers ([MELSEC iQ-R, RnMT/NC/RT, CR800-D], [MELSEC iQ-R, RnMT/RT, CR800-D])	×	×
NPA[*2]	Network basic parameter	Decimal	☞ Page 1406 Setting virtual word devices for servo amplifiers ([MELSEC iQ-R, RnMT/NC/RT, CR800-D], [MELSEC iQ-R, RnMT/RT, CR800-D])	×	×

Device name		Device No. representation	Setting range	Specifications of EG devices[*1]	
				Assignment to EG devices	Access using a client
ALM[*2]	Alarm (current alarm J4A extend)	Decimal	☞ Page 1406 Setting virtual word devices for servo amplifiers ([MELSEC iQ-R, RnMT/NC/RT, CR800-D], [MELSEC iQ-R, RnMT/RT, CR800-D])	×	×
	Alarm (alarm history J4A extend)	Decimal	☞ Page 1406 Setting virtual word devices for servo amplifiers ([MELSEC iQ-R, RnMT/NC/RT, CR800-D], [MELSEC iQ-R, RnMT/RT, CR800-D])	×	×
	Alarm (alarm history J5G extend)	Decimal	☞ Page 1406 Setting virtual word devices for servo amplifiers ([MELSEC iQ-R, RnMT/NC/RT, CR800-D], [MELSEC iQ-R, RnMT/RT, CR800-D])	×	×
POS[*2]	Point table (position)	Decimal	☞ Page 1406 Setting virtual word devices for servo amplifiers ([MELSEC iQ-R, RnMT/NC/RT, CR800-D], [MELSEC iQ-R, RnMT/RT, CR800-D])	×	×
SPD[*2]	Point table (speed)	Decimal	☞ Page 1406 Setting virtual word devices for servo amplifiers ([MELSEC iQ-R, RnMT/NC/RT, CR800-D], [MELSEC iQ-R, RnMT/RT, CR800-D])	×	×
ACT[*2]	Point table (acceleration time constant)	Decimal	☞ Page 1406 Setting virtual word devices for servo amplifiers ([MELSEC iQ-R, RnMT/NC/RT, CR800-D], [MELSEC iQ-R, RnMT/RT, CR800-D])	×	×
DCT[*2]	Point table (deceleration time constant)	Decimal	☞ Page 1406 Setting virtual word devices for servo amplifiers ([MELSEC iQ-R, RnMT/NC/RT, CR800-D], [MELSEC iQ-R, RnMT/RT, CR800-D])	×	×
DWL[*2]	Point table (dwell)	Decimal	☞ Page 1406 Setting virtual word devices for servo amplifiers ([MELSEC iQ-R, RnMT/NC/RT, CR800-D], [MELSEC iQ-R, RnMT/RT, CR800-D])	×	×
AUX[*2]	Point table (auxiliary function)	Decimal	☞ Page 1406 Setting virtual word devices for servo amplifiers ([MELSEC iQ-R, RnMT/NC/RT, CR800-D], [MELSEC iQ-R, RnMT/RT, CR800-D])	×	×
MCD[*2]	Point table (M code)	Decimal	☞ Page 1406 Setting virtual word devices for servo amplifiers ([MELSEC iQ-R, RnMT/NC/RT, CR800-D], [MELSEC iQ-R, RnMT/RT, CR800-D])	×	×
MD[*2]	Machine diagnosis data	Decimal	☞ Page 1406 Setting virtual word devices for servo amplifiers ([MELSEC iQ-R, RnMT/NC/RT, CR800-D], [MELSEC iQ-R, RnMT/RT, CR800-D])	×	×
GFDS[*2]	Gear failure diagnosis data	Decimal	☞ Page 1406 Setting virtual word devices for servo amplifiers ([MELSEC iQ-R, RnMT/NC/RT, CR800-D], [MELSEC iQ-R, RnMT/RT, CR800-D])	×	×
ECCDS[*2]	Encoder communication circuit diagnosis data	Decimal	☞ Page 1406 Setting virtual word devices for servo amplifiers ([MELSEC iQ-R, RnMT/NC/RT, CR800-D], [MELSEC iQ-R, RnMT/RT, CR800-D])	×	×
OTS[*2]	One-touch tuning data	Decimal	☞ Page 1406 Setting virtual word devices for servo amplifiers ([MELSEC iQ-R, RnMT/NC/RT, CR800-D], [MELSEC iQ-R, RnMT/RT, CR800-D])	×	×
DI[*2]	External input signal	Decimal	☞ Page 1406 Setting virtual word devices for servo amplifiers ([MELSEC iQ-R, RnMT/NC/RT, CR800-D], [MELSEC iQ-R, RnMT/RT, CR800-D])	×	×

Device name		Device No. representation	Setting range	Specifications of EG devices*1	
				Assignment to EG devices	Access using a client
DO*2	External output signal	Decimal	☞ Page 1406 Setting virtual word devices for servo amplifiers ([MELSEC iQ-R, RnMT/NC/RT, CR800-D], [MELSEC iQ-R, RnMT/RT, CR800-D])	×	×
JnW	Link register (link direct)	Hexadecimal	J(Network No.n)-W(Device) Notation example: J1-W00000 • Network No.n (decimal): 1 to 239 • Device (hexadecimal): 00000 to 1FFFF*8	○	○
JnSW	Link special register (link direct)	Hexadecimal	J(Network No.n)-SW(Device) Notation example: J1-SW000 • Network No.n (decimal): 1 to 239 • Device (hexadecimal): 000 to FFF	○	○
U3E0G	CPU buffer memory access device	Decimal	U3E0-G(Device) Notation example: U3E0-G100 • Device (decimal): 0 to 268435455	○	○
U3E1G	CPU buffer memory access device	Decimal	U3E1-G(Device) Notation example: U3E1-G100 • Device (decimal): 0 to 268435455	○	○
U3E2G	CPU buffer memory access device	Decimal	U3E2-G(Device) Notation example: U3E2-G100 • Device (decimal): 0 to 268435455	○	○
U3E3G	CPU buffer memory access device	Decimal	U3E3-G(Device) Notation example: U3E3-G100 • Device (decimal): 0 to 268435455	○	○
RD	Refresh data register	Decimal	0 to 1048575	○	○

*1 For the devices assigned to EG devices (gateway devices) and the compatible clients, refer to the following.
📖GT Designer3 (GOT2000) Screen Design Manual

*2 Virtual servo amplifier device
For the details, refer to the following.
☞ Page 1416 Virtual servo amplifier devices ([MELSEC iQ-R, RnMT/NC/RT, CR800-D], [MELSEC iQ-R, RnMT/RT, CR800-D])

*3 Not available to GT21 and GS21.

*4 For the maximum number of devices when an extended SRAM cassette is installed, refer to the following.
📖MELSEC iQ-R CPU Module User's Manual (Application)

*5 For monitoring the multiple CPU high speed transmission memory, the CPU buffer memory access device (HG) for RCPU is monitored.
The CPU buffer memory access device (G) is not monitored.

*6 The device name depends on the servo amplifier.
MR-J5-G(-RJ), MR-J5W□-G: Motor extension parameter
Other than MR-J5-G(-RJ) or MR-J5W□-G: Linear servo motor/DD motor setting parameter

*7 PVS is a virtual device corresponding to the servo parameter (PV) of MR-J5-G(-RJ), MR-J5W□-G, and MR-JET-G.
Use the virtual devices (PVS) to read/write data from/to servo parameters (PV).

*8 The device range for a PLC with the CC-Link IE TSN master/local module (1000BASE-SX model) (RJ71GN11-SX) installed is 00000 to 83FFF.

A

Setting virtual word devices for servo amplifiers ([MELSEC iQ-R, RnMT/NC/RT, CR800-D], [MELSEC iQ-R, RnMT/RT, CR800-D])

For virtual servo amplifier devices, the notation differs according to the connection type between the GOT and the servo amplifier.

Select one of the following according to the control type in the device setting dialog.

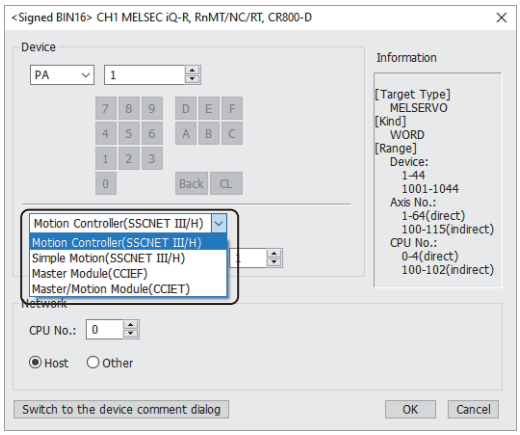

Item	Description
[Motion Controller(SSCNET III/H)]	Select this item to connect the GOT through a Motion controller. The following item is displayed. • [Axis No.]: Set the axis number to be monitored.
[Simple Motion(SSCNET III/H)]	Select this item to connect the GOT through a Simple Motion module (RD77MS). The following items are displayed. • [Unit No.]: Set the first 2 digits of the 3-digit number that represents the start I/O number of the Simple Motion module. • [Axis No.]: Set the axis number to be monitored.
[Master Module(CCIEF)]	Select this item to connect the GOT through the master station on the CC-Link IE Field Network or a Simple Motion module (RD77GF).
[Master/Motion Module(CCIET)]	Select this item to connect the GOT through the master station on the CC-Link IE TSN and a Motion module (RD78G(H)). After the selection, set a device that enables axis designation to display the following item. • [Axis Designation]: Set the axis to be monitored.

The following shows the notation and setting range of virtual devices.

Device name	Device notation and setting range		Notation example
PA	[Motion Controller(SSCNET III/H)]	A(Axis No.)-PA(Device) • Axis No. (decimal): 1 to 64 (direct), 100 to 115 (indirect) • Device (decimal): 1 to 44, 1001 to 1044	A64-PA1
	[Simple Motion(SSCNET III/H)]	U(Unit No.)-A(Axis No.)-PA(Device) • Unit No. (hexadecimal): 00 to FF (direct), 100 to 10F (indirect) • Axis No. (decimal): 1 to 64 (direct), 100 to 115 (indirect) • Device (decimal): 1 to 44, 1001 to 1044	UFF-A64-PA1
	[Master Module(CCIEF)]	PA (Device) • Device (decimal): 1 to 44, 1001 to 1044	PA1
	[Master/Motion Module(CCIET)]	AA(Axis designation)-PA(Device) • Axis designation (decimal): 1 to 3 (direct), 100 to 115 (indirect) • Device (decimal): 1 to 44, 1001 to 1044	AA3-PA1
PB	[Motion Controller(SSCNET III/H)]	A(Axis No.)-PB(Device) • Axis No. (decimal): 1 to 64 (direct), 100 to 115 (indirect) • Device (decimal): 1 to 92, 1001 to 1092	A64-PB1
	[Simple Motion(SSCNET III/H)]	U(Unit No.)-A(Axis No.)-PB(Device) • Unit No. (hexadecimal): 00 to FF (direct), 100 to 10F (indirect) • Axis No. (decimal): 1 to 64 (direct), 100 to 115 (indirect) • Device (decimal): 1 to 92, 1001 to 1092	UFF-A64-PB1
	[Master Module(CCIEF)]	PB(Device) • Device (decimal): 1 to 92, 1001 to 1092	PB1
	[Master/Motion Module(CCIET)]	AA(Axis designation)-PB(Device) • Axis designation (decimal): 1 to 3 (direct), 100 to 115 (indirect) • Device (decimal): 1 to 92, 1001 to 1092	AA3-PB1

Device name	Device notation and setting range		Notation example
PC	[Motion Controller(SSCNET III/H)]	A(Axis No.)-PC(Device) • Axis No. (decimal): 1 to 64 (direct), 100 to 115 (indirect) • Device (decimal): 1 to 90, 1001 to 1090	A64-PC1
	[Simple Motion(SSCNET III/H)]	U(Unit No.)-A(Axis No.)-PC(Device) • Unit No. (hexadecimal): 00 to FF (direct), 100 to 10F (indirect) • Axis No. (decimal): 1 to 64 (direct), 100 to 115 (indirect) • Device (decimal): 1 to 90, 1001 to 1090	UFF-A64-PC1
	[Master Module(CCIEF)]	PC(Device) • Device (decimal): 1 to 90, 1001 to 1090	PC1
	[Master/Motion Module(CCIET)]	AA(Axis designation)-PC(Device) • Axis designation (decimal): 1 to 3 (direct), 100 to 115 (indirect) • Device (decimal): 1 to 90, 1001 to 1090	AA3-PC1
PD	[Motion Controller(SSCNET III/H)]	A(Axis No.)-PD(Device) • Axis No. (decimal): 1 to 64 (direct), 100 to 115 (indirect) • Device (decimal): 1 to 72, 1001 to 1072	A64-PD1
	[Simple Motion(SSCNET III/H)]	U(Unit No.)-A(Axis No.)-PD(Device) • Unit No. (hexadecimal): 00 to FF (direct), 100 to 10F (indirect) • Axis No. (decimal): 1 to 64 (direct), 100 to 115 (indirect) • Device (decimal): 1 to 72, 1001 to 1072	UFF-A64-PD1
	[Master Module(CCIEF)]	PD(Device) • Device (decimal): 1 to 72, 1001 to 1072	PD1
	[Master/Motion Module(CCIET)]	AA(Axis designation)-PD(Device) • Axis designation (decimal): 1 to 3 (direct), 100 to 115 (indirect) • Device (decimal): 1 to 72, 1001 to 1072	AA3-PD1
PO	[Motion Controller(SSCNET III/H)]	A(Axis No.)-PO(Device) • Axis No. (decimal): 1 to 64 (direct), 100 to 115 (indirect) • Device (decimal): 1 to 2, 1001 to 1002	A64-PO1
	[Simple Motion(SSCNET III/H)]	U(Unit No.)-A(Axis No.)-PO(Device) • Unit No. (hexadecimal): 00 to FF (direct), 100 to 10F (indirect) • Axis No. (decimal): 1 to 64 (direct), 100 to 115 (indirect) • Device (decimal): 1 to 2, 1001 to 1002	UFF-A64-PO1
	[Master/Motion Module(CCIET)]	AA(Axis designation)-PO(Device) • Axis designation (decimal): 1 to 3 (direct), 100 to 115 (indirect) • Device (decimal): 1 to 2, 1001 to 1002	AA3-PO1
PS	[Motion Controller(SSCNET III/H)]	A(Axis No.)-PS(Device) • Axis No. (decimal): 1 to 64 (direct), 100 to 115 (indirect) • Device (decimal): 1 to 99, 1001 to 1099	A64-PS1
	[Simple Motion(SSCNET III/H)]	U(Unit No.)-A(Axis No.)-PS(Device) • Unit No. (hexadecimal): 00 to FF (direct), 100 to 10F (indirect) • Axis No. (decimal): 1 to 64 (direct), 100 to 115 (indirect) • Device (decimal): 1 to 99, 1001 to 1099	UFF-A64-PS1
	[Master/Motion Module(CCIET)]	AA(Axis designation)-PS(Device) • Axis designation (decimal): 1 to 3 (direct), 100 to 115 (indirect) • Device (decimal): 1 to 99, 1001 to 1099	AA3-PS1
PU	[Motion Controller(SSCNET III/H)]	A(Axis No.)-PU(Device) • Axis No. (decimal): 1 to 64 (direct), 100 to 115 (indirect) • Device (decimal): 1 to 44, 1001 to 1044	A64-PU1
	[Simple Motion(SSCNET III/H)]	U(Unit No.)-A(Axis No.)-PU(Device) • Unit No. (hexadecimal): 00 to FF (direct), 100 to 10F (indirect) • Axis No. (decimal): 1 to 64 (direct), 100 to 115 (indirect) • Device (decimal): 1 to 44, 1001 to 1044	UFF-A64-PU1
	[Master/Motion Module(CCIET)]	AA(Axis designation)-PU(Device) • Axis designation (decimal): 1 to 3 (direct), 100 to 115 (indirect) • Device (decimal): 1 to 44, 1001 to 1044	AA3-PU1
PT	[Master Module(CCIEF)]	PT(Device) • Device (decimal): 1 to 90, 1001 to 1090	PT1
	[Master/Motion Module(CCIET)]	AA(Axis designation)-PT(Device) • Axis designation (decimal): 1 to 3 (direct), 100 to 115 (indirect) • Device (decimal): 1 to 90, 1001 to 1090	AA3-PT1

Device name	Device notation and setting range		Notation example
PL	[Motion Controller(SSCNET III/H)]	A(Axis No.)-PL(Device) • Axis No. (decimal): 1 to 64 (direct), 100 to 115 (indirect) • Device (decimal): 1 to 72, 1001 to 1072	A64-PL1
	[Simple Motion(SSCNET III/H)]	U(Unit No.)-A(Axis No.)-PL(Device) • Unit No. (hexadecimal): 00 to FF (direct), 100 to 10F (indirect) • Axis No. (decimal): 1 to 64 (direct), 100 to 115 (indirect) • Device (decimal): 1 to 72, 1001 to 1072	UFF-A64-PL1
	[Master Module(CCIEF)]	PL(Device) • Device (decimal): 1 to 72, 1001 to 1072	PL1
	[Master/Motion Module(CCIET)]	AA(Axis designation)-PL(Device) • Axis designation (decimal): 1 to 3 (direct), 100 to 115 (indirect) • Device (decimal): 1 to 72, 1001 to 1072	AA3-PL1
PN	[Master Module(CCIEF)]	PN(Device) • Device (decimal): 1 to 32, 1001 to 1032	PN1
	[Master/Motion Module(CCIET)]	AA(Axis designation)-PN(Device) • Axis designation (decimal): 1 to 3 (direct), 100 to 115 (indirect) • Device (decimal): 1 to 32, 1001 to 1032	AA3-PN1
PVS	[Master/Motion Module(CCIET)]	AA(Axis designation)-PVS(Device) • Axis designation (decimal): 1 to 3 (direct), 100 to 115 (indirect) • Device (decimal): 1 to 32, 1001 to 1032	AA3-PVS1
ST	[Motion Controller(SSCNET III/H)]	A(Axis No.)-ST(Device) • Axis No. (decimal): 1 to 64 (direct), 100 to 115 (indirect) • Device (decimal): 0 to 48	A64-ST0
	[Simple Motion(SSCNET III/H)]	U(Unit No.)-A(Axis No.)-ST(Device) • Unit No. (hexadecimal): 00 to FF (direct), 100 to 10F (indirect) • Axis No. (decimal): 1 to 64 (direct), 100 to 115 (indirect) • Device (decimal): 0 to 48	UFF-A64-ST0
	[Master Module(CCIEF)]	ST(Device) • Device (decimal): 0 to 48	ST0
	[Master/Motion Module(CCIET)]	AA(Axis designation)-ST(Device) • Axis designation (decimal): 1 to 3 (direct), 100 to 115 (indirect) • Device (decimal): 0 to 48	AA3-ST0
PE	[Motion Controller(SSCNET III/H)]	A(Axis No.)-PE(Device) • Axis No. (decimal): 1 to 64 (direct), 100 to 115 (indirect) • Device (decimal): 1 to 88, 1001 to 1088	A64-PE1
	[Simple Motion(SSCNET III/H)]	U(Unit No.)-A(Axis No.)-PE(Device) • Unit No. (hexadecimal): 00 to FF (direct), 100 to 10F (indirect) • Axis No. (decimal): 1 to 64 (direct), 100 to 115 (indirect) • Device (decimal): 1 to 88, 1001 to 1088	UFF-A64-PE1
	[Master Module(CCIEF)]	PE(Device) • Device (decimal): 1 to 88, 1001 to 1088	PE1
	[Master/Motion Module(CCIET)]	AA(Axis designation)-PE(Device) • Axis designation (decimal): 1 to 3 (direct), 100 to 115 (indirect) • Device (decimal): 1 to 88, 1001 to 1088	AA3-PE1
PF	[Motion Controller(SSCNET III/H)]	A(Axis No.)-PF(Device) • Axis No. (decimal): 1 to 64 (direct), 100 to 115 (indirect) • Device (decimal): 1 to 99, 1001 to 1099	A64-PF1
	[Simple Motion(SSCNET III/H)]	U(Unit No.)-A(Axis No.)-PF(Device) • Unit No. (hexadecimal): 00 to FF (direct), 100 to 10F (indirect) • Axis No. (decimal): 1 to 64 (direct), 100 to 115 (indirect) • Device (decimal): 1 to 99, 1001 to 1099	UFF-A64-PF1
	[Master Module(CCIEF)]	PF(Device) • Device (decimal): 1 to 99, 1001 to 1099	PF1
	[Master/Motion Module(CCIET)]	AA(Axis designation)-PF(Device) • Axis designation (decimal): 1 to 3 (direct), 100 to 115 (indirect) • Device (decimal): 1 to 99, 1001 to 1099	AA3-PF1
NPA	[Master/Motion Module(CCIET)]	NPA(Device) • Device (decimal): 1 to 12, 2001 to 2032	NPA1

Device name	Device notation and setting range		Notation example
ALM	[Motion Controller(SSCNET III/H)]	A(Axis No.)-ALM(Device) • Axis No. (decimal): 1 to 64 (direct), 100 to 115 (indirect) • Device (decimal): 0 to 2, 11 to 59, 200 to 215, 220 to 235, 240 to 255, 260 to 275, 280 to 295, 300 to 315	A64-ALM0
	[Simple Motion(SSCNET III/H)]	U(Unit No.)-A(Axis No.)-ALM(Device) • Unit No. (hexadecimal): 00 to FF (direct), 100 to 10F (indirect) • Axis No. (decimal): 1 to 64 (direct), 100 to 115 (indirect) • Device (decimal): 0 to 2, 11 to 59, 200 to 215, 220 to 235, 240 to 255, 260 to 275, 280 to 295, 300 to 315	UFF-A64-ALM0
	[Master Module(CCIEF)]	ALM(Device) • Device (decimal): 0 to 2, 11 to 59, 200 to 215, 220 to 235, 240 to 255, 260 to 275, 280 to 295, 300 to 315	ALM0
	[Master/Motion Module(CCIET)]	AA(Axis designation)-ALM(Device) • Axis designation (decimal): 1 to 3 (direct), 100 to 115 (indirect) • Device (decimal): 0 to 2, 11 to 59, 200 to 215, 220 to 235, 240 to 255, 260 to 275, 280 to 295, 300 to 315	AA3-ALM0
POS	[Master Module(CCIEF)]	POS(Device) • Device (decimal): 1 to 255, 1001 to 1255	POS1
	[Master/Motion Module(CCIET)]	AA(Axis designation)-POS(Device) • Axis designation (decimal): 1 to 3 (direct), 100 to 115 (indirect) • Device (decimal): 1 to 255, 1001 to 1255	AA3-POS1
SPD	[Master Module(CCIEF)]	SPD(Device) • Device (decimal): 1 to 255, 1001 to 1255	SPD1
	[Master/Motion Module(CCIET)]	AA(Axis designation)-SPD(Device) • Axis designation (decimal): 1 to 3 (direct), 100 to 115 (indirect) • Device (decimal): 1 to 255, 1001 to 1255	AA3-SPD1
ACT	[Master Module(CCIEF)]	ACT(Device) • Device (decimal): 1 to 255, 1001 to 1255	ACT1
	[Master/Motion Module(CCIET)]	AA(Axis designation)-ACT(Device) • Axis designation (decimal): 1 to 3 (direct), 100 to 115 (indirect) • Device (decimal): 1 to 255, 1001 to 1255	AA3-ACT1
DCT	[Master Module(CCIEF)]	DCT(Device) • Device (decimal): 1 to 255, 1001 to 1255	DCT1
	[Master/Motion Module(CCIET)]	AA(Axis designation)-DCT(Device) • Axis designation (decimal): 1 to 3 (direct), 100 to 115 (indirect) • Device (decimal): 1 to 255, 1001 to 1255	AA3-DCT1
DWL	[Master Module(CCIEF)]	DWL(Device) • Device (decimal): 1 to 255, 1001 to 1255	DWL1
	[Master/Motion Module(CCIET)]	AA(Axis designation)-DWL(Device) • Axis designation (decimal): 1 to 3 (direct), 100 to 115 (indirect) • Device (decimal): 1 to 255, 1001 to 1255	AA3-DWL1
AUX	[Master Module(CCIEF)]	AUX(Device) • Device (decimal): 1 to 255, 1001 to 1255	AUX1
	[Master/Motion Module(CCIET)]	AA(Axis designation)-AUX(Device) • Axis designation (decimal): 1 to 3 (direct), 100 to 115 (indirect) • Device (decimal): 1 to 255, 1001 to 1255	AA3-AUX1
MCD	[Master/Motion Module(CCIET)]	AA(Axis designation)-MCD(Device) • Axis designation (decimal): 1 to 3 (direct), 100 to 115 (indirect) • Device (decimal): 1 to 255, 1001 to 1255	AA3-MCD1
MD	[Motion Controller(SSCNET III/H)]	A(Axis No.)-MD(Device) • Axis No. (decimal): 1 to 64 (direct), 100 to 115 (indirect) • Device (decimal): 0 to 21	A64-MD0
	[Simple Motion(SSCNET III/H)]	U(Unit No.)-A(Axis No.)-MD(Device) • Unit No. (hexadecimal): 00 to FF (direct), 100 to 10F (indirect) • Axis No. (decimal): 1 to 64 (direct), 100 to 115 (indirect) • Device (decimal): 0 to 21	UFF-A64-MD0
	[Master Module(CCIEF)]	MD(Device) • Device (decimal): 0 to 21	MD0
	[Master/Motion Module(CCIET)]	AA(Axis designation)-MD(Device) • Axis designation (decimal): 1 to 3 (direct), 100 to 115 (indirect) • Device (decimal): 0 to 21	AA3-MD0

Device name	Device notation and setting range		Notation example
GFDS	[Motion Controller(SSCNET III/H)]	A(Axis No.)-GFDS(Device) • Axis No. (decimal): 1 to 64 (direct), 100 to 115 (indirect) • Device (decimal): 0 to 5	A64-GFDS0
	[Simple Motion(SSCNET III/H)]	U(Unit No.)-A(Axis No.)-GFDS(Device) • Unit No. (hexadecimal): 00 to FF (direct), 100 to 10F (indirect) • Axis No. (decimal): 1 to 64 (direct), 100 to 115 (indirect) • Device (decimal): 0 to 5	UFF-A64-GFDS0
	[Master/Motion Module(CCIET)]	AA(Axis designation)-GFDS(Device) • Axis designation (decimal): 1 to 3 (direct), 100 to 115 (indirect) • Device (decimal): 0 to 5	AA3-GFDS0
ECCDS	[Motion Controller(SSCNET III/H)]	A(Axis No.)-ECCDS(Device) • Axis No. (decimal): 1 to 64 (direct), 100 to 115 (indirect) • Device (decimal): 0 to 5	A64-ECCDS0
	[Simple Motion(SSCNET III/H)]	U(Unit No.)-A(Axis No.)-ECCDS(Device) • Unit No. (hexadecimal): 00 to FF (direct), 100 to 10F (indirect) • Axis No. (decimal): 1 to 64 (direct), 100 to 115 (indirect) • Device (decimal): 0 to 5	UFF-A64-ECCDS0
	[Master/Motion Module(CCIET)]	AA(Axis designation)-ECCDS(Device) • Axis designation (decimal): 1 to 3 (direct), 100 to 115 (indirect) • Device (decimal): 0 to 5	AA3-ECCDS0
OTS	[Motion Controller(SSCNET III/H)]	A(Axis No.)-OTS(Device) • Axis No. (decimal): 1 to 64 (direct), 100 to 115 (indirect) • Device (decimal): 0 to 5, 3000	A64-OTS0
	[Simple Motion(SSCNET III/H)]	U(Unit No.)-A(Axis No.)-OTS(Device) • Unit No. (hexadecimal): 00 to FF (direct), 100 to 10F (indirect) • Axis No. (decimal): 1 to 64 (direct), 100 to 115 (indirect) • Device (decimal): 0 to 5, 3000	UFF-A64-OTS0
	[Master Module(CCIEF)]	OTS(Device) • Device (decimal): 0 to 5, 3000	OTS0
	[Master/Motion Module(CCIET)]	AA(Axis designation)-OTS(Device) • Axis designation (decimal): 1 to 3 (direct), 100 to 115 (indirect) • Device (decimal): 0 to 5, 3000	AA3-OTS0
DI	[Motion Controller(SSCNET III/H)]	A(Axis No.)-DI(Device) • Axis No. (decimal): 1 to 64 (direct), 100 to 115 (indirect) • Device (decimal): 0 to 6	A64-DI0
	[Simple Motion(SSCNET III/H)]	U(Unit No.)-A(Axis No.)-DI(Device) • Unit No. (hexadecimal): 00 to FF (direct), 100 to 10F (indirect) • Axis No. (decimal): 1 to 64 (direct), 100 to 115 (indirect) • Device (decimal): 0 to 6	UFF-A64-DI0
	[Master Module(CCIEF)]	DI(Device) • Device (decimal): 0 to 6	DI0
	[Master/Motion Module(CCIET)]	AA(Axis designation)-DI(Device) • Axis designation (decimal): 1 to 3 (direct), 100 to 115 (indirect) • Device (decimal): 0 to 6	AA3-DI0
DO	[Motion Controller(SSCNET III/H)]	A(Axis No.)-DO(Device) • Axis No. (decimal): 1 to 64 (direct), 100 to 115 (indirect) • Device (decimal): 0 to 4	A64-DO0
	[Simple Motion(SSCNET III/H)]	U(Unit No.)-A(Axis No.)-DO(Device) • Unit No. (hexadecimal): 00 to FF (direct), 100 to 10F (indirect) • Axis No. (decimal): 1 to 64 (direct), 100 to 115 (indirect) • Device (decimal): 0 to 4	UFF-A64-DO0
	[Master Module(CCIEF)]	DO(Device) • Device (decimal): 0 to 4	DO0
	[Master/Motion Module(CCIET)]	AA(Axis designation)-DO(Device) • Axis designation (decimal): 1 to 3 (direct), 100 to 115 (indirect) • Device (decimal): 0 to 4	AA3-DO0

For indirect specification of a module number, axis number, or axis designation, refer to the following.

☞ Page 1398 Indirect specification of a module number ([MELSEC iQ-R, RnMT/NC/RT, CR800-D], [MELSEC iQ-R, RnMT/RT, CR800-D])

☞ Page 1399 Indirect specification of an axis number or axis designation ([MELSEC iQ-R, RnMT/NC/RT, CR800-D], [MELSEC iQ-R, RnMT/RT, CR800-D])

Availability of writing/reading data to/from word devices ([MELSEC iQ-R, RnMT/NC/RT, CR800-D], [MELSEC iQ-R, RnMT/RT, CR800-D])

The following shows the availability of writing/reading data to/from word devices by device type.

R/W: Both read and write

R/-: Read only

-/W: Write only

-/-: No read/write access

Device name	Device type			
	Word (16 bits)	Double-word (32 bits)	Quad-word (64 bits)	Bit of word data
TN	R/W	R/W	-/-	-/-
CN	R/W	R/W	-/-	-/-
SN	R/W	R/W	-/-	-/-
D	R/W	R/W	R/W	R/W
SD	R/W	R/W	R/W	R/W
W	R/W	R/W	R/W	R/W
SW	R/W	R/W	-/-	R/W
R	R/W	R/W	R/W	R/W
ER	R/W	R/W	R/W	R/W
ZR	R/W	R/W	R/W	R/W
Z	R/W	R/W	-/-	-/-
G	R/W	R/W	R/W	R/W
Ww	R/W	R/W	R/W	R/W
Wr	R/W	R/W	R/W	R/W
LW	R/W	R/W	R/W	R/W
#	R/W	R/W	-/-	R/W
U3E0	R/W	R/W	R/W	R/W
U3E1	R/W	R/W	R/W	R/W
U3E2	R/W	R/W	R/W	R/W
U3E3	R/W	R/W	R/W	R/W
SATN	R/-	R/-	-/-	-/-
SACN	R/-	R/-	-/-	-/-
SASN	R/-	R/-	-/-	-/-
SAD	R/-	R/-	-/-	R/-
SASD	R/-	R/-	-/-	R/-
SAW	R/-	R/-	-/-	R/-
PA	R/W	R/W	-/-	-/-
PB	R/W	R/W	-/-	-/-
PC	R/W	R/W	-/-	-/-
PD	R/W	R/W	-/-	-/-
PO	R/W	R/W	-/-	-/-
PS	R/W	R/W	-/-	-/-
PU	R/W	R/W	-/-	-/-
PT	R/W	R/W	-/-	-/-
PL	R/W	R/W	-/-	-/-
PN	R/W	R/W	-/-	-/-
PVS	R/W	R/W	-/-	-/-
ST	R/-	R/-	-/-	-/-
PE	R/W	R/W	-/-	-/-
PF	R/W	R/W	-/-	-/-
NPA*1	R/W	R/W	-/-	-/-
ALM	R/-	R/-	-/-	-/-
POS	R/W	R/W	-/-	-/-

A

Device name	Device type			
	Word (16 bits)	Double-word (32 bits)	Quad-word (64 bits)	Bit of word data
SPD	R/W	R/W	-/-	-/-
ACT	R/W	R/W	-/-	-/-
DCT	R/W	R/W	-/-	-/-
DWL	R/W	R/W	-/-	-/-
AUX	R/W	R/W	-/-	-/-
MCD	R/W	R/W	-/-	-/-
MD	R/-	R/-	-/-	-/-
GFDS	R/-	R/-	-/-	-/-
ECCDS	R/-	R/-	-/-	-/-
OTS*2	R/W	R/W	-/-	-/-
DI	R/-	R/W	-/-	-/-
DO	R/-	R/-	-/-	-/-
JnW	R/W	R/W	R/W	R/W
JnSW	R/W	R/W	-/-	R/W
U3E0G	R/W	R/W	R/W	R/W
U3E1G	R/W	R/W	R/W	R/W
U3E2G	R/W	R/W	R/W	R/W
U3E3G	R/W	R/W	R/W	R/W
RD	R/W	R/W	R/W	R/W

*1 Only reading is available for NPA1 and NPA2001 to NPA2032.
*2 Only reading is available for OTS0 to OTS5.

Monitoring-supported double-word devices ([MELSEC iQ-R, RnMT/NC/RT, CR800-D], [MELSEC iQ-R, RnMT/RT, CR800-D])

The following table shows monitoring-supported double-word devices.

To check whether writing/reading data to/from each device is available, refer to the following.

☞ Page 1415 Availability of writing/reading data to/from double-word devices ([MELSEC iQ-R, RnMT/NC/RT, CR800-D], [MELSEC iQ-R, RnMT/RT, CR800-D])

○: Available

×: Not available

Device name		Device No. representation	Setting range	Specifications of EG devices*1	
				Assignment to EG devices	Access using a client
LTN*4	Long timer current value	Decimal	0 to 2529407	×	×
LCN*4	Long counter current value	Decimal	0 to 4761215	×	×
LSN*4	Long retentive timer current value	Decimal	0 to 2529407	×	×
ZZ	Index register (32 bits)	Decimal	0 to 22	×	×
LZ	Index register (32 bits)	Decimal	0 to 11	×	×
ALD*2	Life diagnosis	Decimal	☞ Page 1414 Setting virtual double-word devices for servo amplifiers ([MELSEC iQ-R, RnMT/NC/RT, CR800-D], [MELSEC iQ-R, RnMT/RT, CR800-D])	×	×
TMI*2	Input signal for test operation (for test operation)	Decimal	☞ Page 1414 Setting virtual double-word devices for servo amplifiers ([MELSEC iQ-R, RnMT/NC/RT, CR800-D], [MELSEC iQ-R, RnMT/RT, CR800-D])	×	×
TMO*2	Forced output of signal pin (for test operation)	Decimal	☞ Page 1414 Setting virtual double-word devices for servo amplifiers ([MELSEC iQ-R, RnMT/NC/RT, CR800-D], [MELSEC iQ-R, RnMT/RT, CR800-D])	×	×
TMD*2	Set data (for test operation)	Decimal	☞ Page 1414 Setting virtual double-word devices for servo amplifiers ([MELSEC iQ-R, RnMT/NC/RT, CR800-D], [MELSEC iQ-R, RnMT/RT, CR800-D])	×	×
AL*3	Faults history	Decimal	0 to 899	×	×
LPr*3*5	Parameter (32-bit)	Decimal	0 to 1500	×	×
OP*3	Operation parameter	Decimal	0 to 5	×	×
PV*3	Current value monitor	Decimal	1 to 143	×	×

*1 For the devices assigned to EG devices (gateway devices) and the compatible clients, refer to the following.
📖GT Designer3 (GOT2000) Screen Design Manual

*2 Virtual servo amplifier device
For the details, refer to the following.
☞ Page 1416 Virtual servo amplifier devices ([MELSEC iQ-R, RnMT/NC/RT, CR800-D], [MELSEC iQ-R, RnMT/RT, CR800-D])

*3 Virtual inverter device
For the details, refer to the following.
☞ Page 1469 Virtual inverter devices ([MELSEC iQ-R, RnMT/NC/RT, CR800-D], [MELSEC iQ-R, RnMT/RT, CR800-D])

*4 For the maximum number of devices when an extended SRAM cassette is installed, refer to the following.
📖MELSEC iQ-R CPU Module User's Manual (Application)

*5 If you specify LPr900 to LPr935, the following item is displayed in the device setting dialog.
[Setting items (for calibration parameters)]: [Bias/gain value], [Analog input value]
Enclose the device number in parentheses when selecting [Analog input value].
Example 1) Notation when [Bias/gain value] is selected: LPr900
Example 2) Notation when [Analog input value] is selected: LPr(900)
When LPr900 or LPr901 (Calibration parameter) is specified, selecting [Bias/gain value] or [Analog input value] does not affect the monitoring target.

Setting virtual double-word devices for servo amplifiers ([MELSEC iQ-R, RnMT/NC/RT, CR800-D], [MELSEC iQ-R, RnMT/RT, CR800-D])

For virtual servo amplifier devices, the notation differs according to the connection type between the GOT and the servo amplifier.

Select one of the following according to the control type in the device setting dialog.

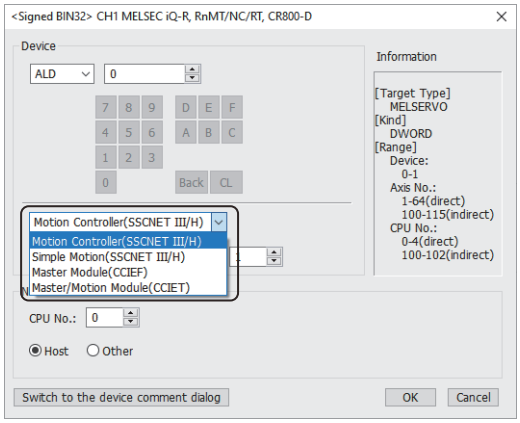

Item	Description
[Motion Controller(SSCNET III/H)]	Select this item to connect the GOT through a Motion controller. The following item is displayed. • [Axis No.]: Set the axis number to be monitored.
[Simple Motion(SSCNET III/H)]	Select this item to connect the GOT through a Simple Motion module (RD77MS). The following items are displayed. • [Unit No.]: Set the first 2 digits of the 3-digit number that represents the start I/O number of the Simple Motion module. • [Axis No.]: Set the axis number to be monitored.
[Master Module(CCIEF)]	Select this item to connect the GOT through the master station on the CC-Link IE Field Network or a Simple Motion module (RD77GF).
[Master/Motion Module(CCIET)]	Select this item to connect the GOT through the master station on the CC-Link IE TSN and a Motion module (RD78G(H)). After the selection, set a device that enables axis designation to display the following item. • [Axis Designation]: Set the axis to be monitored.

The following shows the notation and setting range of virtual devices.

Device name	Device notation and setting range		Notation example
ALD	[Motion Controller(SSCNET III/H)]	A(Axis No.)-ALD(Device) • Axis No. (decimal): 1 to 64 (direct), 100 to 115 (indirect) • Device (decimal): 0 to 1	A64-ALD0
	[Simple Motion(SSCNET III/H)]	U(Unit No.)-A(Axis No.)-ALD(Device) • Unit No. (hexadecimal): 00 to FF (direct), 100 to 10F (indirect) • Axis No. (decimal): 1 to 64 (direct), 100 to 115 (indirect) • Device (decimal): 0 to 1	UFF-A64-ALD0
	[Master Module(CCIEF)]	ALD(Device) • Device (decimal): 0 to 1	ALD0
	[Master/Motion Module(CCIET)]	AA(Axis designation)-ALD(Device) • Axis designation (decimal): 1 to 3 (direct), 100 to 115 (indirect) • Device (decimal): 0 to 1	AA3-ALD0
TMI	[Motion Controller(SSCNET III/H)]	A(Axis No.)-TMI(Device) • Axis No. (decimal): 1 to 64 (direct), 100 to 115 (indirect) • Device (decimal): 0 to 2	A64-TMI0
	[Simple Motion(SSCNET III/H)]	U(Unit No.)-A(Axis No.)-TMI(Device) • Unit No. (hexadecimal): 00 to FF (direct), 100 to 10F (indirect) • Axis No. (decimal): 1 to 64 (direct), 100 to 115 (indirect) • Device (decimal): 0 to 2	UFF-A64-TMI0
	[Master Module(CCIEF)]	TMI(Device) • Device (decimal): 0 to 2	TMI0
	[Master/Motion Module(CCIET)]	AA(Axis designation)-TMI(Device) • Axis designation (decimal): 1 to 3 (direct), 100 to 115 (indirect) • Device (decimal): 0 to 2	AA3-TMI0

Device name	Device notation and setting range		Notation example
TMO	[Motion Controller(SSCNET III/H)]	A(Axis No.)-TMO(Device) • Axis No. (decimal): 1 to 64 (direct), 100 to 115 (indirect) • Device (decimal): 0	A64-TMO0
	[Simple Motion(SSCNET III/H)]	U(Unit No.)-A(Axis No.)-TMO(Device) • Unit No. (hexadecimal): 00 to FF (direct), 100 to 10F (indirect) • Axis No. (decimal): 1 to 64 (direct), 100 to 115 (indirect) • Device (decimal): 0	UFF-A64-TMO0
	[Master Module(CCIEF)]	TMO(Device) • Device (decimal): 0	TMO0
	[Master/Motion Module(CCIET)]	AA(Axis designation)-TMO(Device) • Axis designation (decimal): 1 to 3 (direct), 100 to 115 (indirect) • Device (decimal): 0	AA3-TMO0
TMD	[Motion Controller(SSCNET III/H)]	A(Axis No.)-TMD(Device) • Axis No. (decimal): 1 to 64 (direct), 100 to 115 (indirect) • Device (decimal): 0 to 1, 3	A64-TMD0
	[Simple Motion(SSCNET III/H)]	U(Unit No.)-A(Axis No.)-TMD(Device) • Unit No. (hexadecimal): 00 to FF (direct), 100 to 10F (indirect) • Axis No. (decimal): 1 to 64 (direct), 100 to 115 (indirect) • Device (decimal): 0 to 1, 3	UFF-A64-TMD0
	[Master Module(CCIEF)]	TMD(Device) • Device (decimal): 0 to 1, 3	TMD0
	[Master/Motion Module(CCIET)]	AA(Axis designation)-TMD(Device) • Axis designation (decimal): 1 to 3 (direct), 100 to 115 (indirect) • Device (decimal): 0 to 1, 3	AA3-TMD0

For indirect specification of a module number, axis number, or axis designation, refer to the following.

☞ Page 1398 Indirect specification of a module number ([MELSEC iQ-R, RnMT/NC/RT, CR800-D], [MELSEC iQ-R, RnMT/RT, CR800-D])

☞ Page 1399 Indirect specification of an axis number or axis designation ([MELSEC iQ-R, RnMT/NC/RT, CR800-D], [MELSEC iQ-R, RnMT/RT, CR800-D])

Availability of writing/reading data to/from double-word devices ([MELSEC iQ-R, RnMT/NC/RT, CR800-D], [MELSEC iQ-R, RnMT/RT, CR800-D])

The following shows the availability of writing/reading data to/from double-word devices by device type.

R/W: Both read and write

R/-: Read only

-/W: Write only

-/-: No read/write access

Device name	Device type			
	Word (16 bits)	Double-word (32 bits)	Quad-word (64 bits)	Bit of double-word data
LTN	-/-	R/W	-/-	-/-
LCN	-/-	R/W	-/-	-/-
LSN	-/-	R/W	-/-	-/-
ZZ	-/-	R/W	-/-	-/-
LZ	-/-	R/W	-/-	-/-
ALD	-/-	R/-	-/-	-/-
TMI	-/-	-/W	-/-	-/-
TMO	-/-	-/W	-/-	-/-
TMD	-/-	-/W	-/-	-/-
AL	-/-	R/-	-/-	-/-
LPr	-/-	R/W	-/-	-/-
OP	-/-	R/W	-/-	-/-
PV	-/-	R/-	-/-	-/-

Virtual servo amplifier devices ([MELSEC iQ-R, RnMT/NC/RT, CR800-D], [MELSEC iQ-R, RnMT/RT, CR800-D])

The following shows the correspondence between the virtual devices used in the GOT and the servo amplifier data.

Virtual device name	Reference
SP	☞ Page 1418 Servo amplifier request ([MELSEC iQ-R, RnMT/NC/RT, CR800-D], [MELSEC iQ-R, RnMT/RT, CR800-D])
OM	☞ Page 1418 Operation mode selection ([MELSEC iQ-R, RnMT/NC/RT, CR800-D], [MELSEC iQ-R, RnMT/RT, CR800-D])
TMB	☞ Page 1419 Instruction demand (for test operation) ([MELSEC iQ-R, RnMT/NC/RT, CR800-D], [MELSEC iQ-R, RnMT/RT, CR800-D])
OTI	☞ Page 1419 One-touch tuning instruction ([MELSEC iQ-R, RnMT/NC/RT, CR800-D], [MELSEC iQ-R, RnMT/RT, CR800-D])
GFDI	☞ Page 1420 Gear failure diagnosis instruction ([MELSEC iQ-R, RnMT/NC/RT, CR800-D], [MELSEC iQ-R, RnMT/RT, CR800-D])
ECCDI	☞ Page 1420 Encoder communication circuit diagnosis instruction ([MELSEC iQ-R, RnMT/NC/RT, CR800-D], [MELSEC iQ-R, RnMT/RT, CR800-D])
PA	☞ Page 1421 Basic parameter ([MELSEC iQ-R, RnMT/NC/RT, CR800-D], [MELSEC iQ-R, RnMT/RT, CR800-D])
PB	☞ Page 1423 Gain filter parameter ([MELSEC iQ-R, RnMT/NC/RT, CR800-D], [MELSEC iQ-R, RnMT/RT, CR800-D])
PC	☞ Page 1427 Extension setting parameter ([MELSEC iQ-R, RnMT/NC/RT, CR800-D], [MELSEC iQ-R, RnMT/RT, CR800-D])
PD	☞ Page 1430 I/O setting parameter ([MELSEC iQ-R, RnMT/NC/RT, CR800-D], [MELSEC iQ-R, RnMT/RT, CR800-D])
PO	☞ Page 1432 Option unit parameter ([MELSEC iQ-R, RnMT/NC/RT, CR800-D], [MELSEC iQ-R, RnMT/RT, CR800-D])
PS	☞ Page 1432 Special parameter ([MELSEC iQ-R, RnMT/NC/RT, CR800-D], [MELSEC iQ-R, RnMT/RT, CR800-D])
PU	☞ Page 1432 Multi encoder parameter ([MELSEC iQ-R, RnMT/NC/RT, CR800-D], [MELSEC iQ-R, RnMT/RT, CR800-D])
PT	☞ Page 1433 Positioning control parameter ([MELSEC iQ-R, RnMT/NC/RT, CR800-D], [MELSEC iQ-R, RnMT/RT, CR800-D])
PL	☞ Page 1436 Motor extension parameter, linear servo motor/DD motor setting parameter ([MELSEC iQ-R, RnMT/NC/RT, CR800-D], [MELSEC iQ-R, RnMT/RT, CR800-D])
PN	☞ Page 1437 Network setting parameter ([MELSEC iQ-R, RnMT/NC/RT, CR800-D], [MELSEC iQ-R, RnMT/RT, CR800-D])
PVS	☞ Page 1438 Position extension parameter ([MELSEC iQ-R, RnMT/NC/RT, CR800-D], [MELSEC iQ-R, RnMT/RT, CR800-D])
ST	☞ Page 1439 Status display ([MELSEC iQ-R, RnMT/NC/RT, CR800-D], [MELSEC iQ-R, RnMT/RT, CR800-D])
PE	☞ Page 1441 Extension setting No.2 parameter ([MELSEC iQ-R, RnMT/NC/RT, CR800-D], [MELSEC iQ-R, RnMT/RT, CR800-D])
PF	☞ Page 1443 Extension setting No.3 parameter ([MELSEC iQ-R, RnMT/NC/RT, CR800-D], [MELSEC iQ-R, RnMT/RT, CR800-D])
NPA	☞ Page 1446 Network basic parameter ([MELSEC iQ-R, RnMT/NC/RT, CR800-D], [MELSEC iQ-R, RnMT/RT, CR800-D])
ALM	☞ Page 1447 Alarm ([MELSEC iQ-R, RnMT/NC/RT, CR800-D], [MELSEC iQ-R, RnMT/RT, CR800-D])
	☞ Page 1456 Specifications of ALM260 to ALM275, ALM280 to ALM295, and ALM300 to ALM315 ([MELSEC iQ-R, RnMT/NC/RT, CR800-D], [MELSEC iQ-R, RnMT/RT, CR800-D])
POS	☞ Page 1456 Point table (position) ([MELSEC iQ-R, RnMT/NC/RT, CR800-D], [MELSEC iQ-R, RnMT/RT, CR800-D])
SPD	☞ Page 1456 Point table (speed) ([MELSEC iQ-R, RnMT/NC/RT, CR800-D], [MELSEC iQ-R, RnMT/RT, CR800-D])
ACT	☞ Page 1457 Point table (acceleration time constant) ([MELSEC iQ-R, RnMT/NC/RT, CR800-D], [MELSEC iQ-R, RnMT/RT, CR800-D])
DCT	☞ Page 1457 Point table (deceleration time constant) ([MELSEC iQ-R, RnMT/NC/RT, CR800-D], [MELSEC iQ-R, RnMT/RT, CR800-D])
DWL	☞ Page 1457 Point table (dwell) ([MELSEC iQ-R, RnMT/NC/RT, CR800-D], [MELSEC iQ-R, RnMT/RT, CR800-D])
AUX	☞ Page 1458 Point table (auxiliary function) ([MELSEC iQ-R, RnMT/NC/RT, CR800-D], [MELSEC iQ-R, RnMT/RT, CR800-D])
MCD	☞ Page 1458 Point table (M code) ([MELSEC iQ-R, RnMT/NC/RT, CR800-D], [MELSEC iQ-R, RnMT/RT, CR800-D])
MD	☞ Page 1459 Machine diagnosis data ([MELSEC iQ-R, RnMT/NC/RT, CR800-D], [MELSEC iQ-R, RnMT/RT, CR800-D])
GFDS	☞ Page 1460 Gear failure diagnosis data ([MELSEC iQ-R, RnMT/NC/RT, CR800-D], [MELSEC iQ-R, RnMT/RT, CR800-D])
ECCDS	☞ Page 1461 Encoder communication circuit diagnosis data ([MELSEC iQ-R, RnMT/NC/RT, CR800-D], [MELSEC iQ-R, RnMT/RT, CR800-D])
OTS	☞ Page 1461 One-touch tuning data ([MELSEC iQ-R, RnMT/NC/RT, CR800-D], [MELSEC iQ-R, RnMT/RT, CR800-D])

Virtual device name	Reference
DI	☞ Page 1462 External input signal in MR-J5-G(-RJ) and MR-J5W□-G ([MELSEC iQ-R, RnMT/NC/RT, CR800-D], [MELSEC iQ-R, RnMT/RT, CR800-D]) ☞ Page 1462 External input signal in MR-J5D□-G ([MELSEC iQ-R, RnMT/NC/RT, CR800-D], [MELSEC iQ-R, RnMT/RT, CR800-D]) ☞ Page 1463 External input signal in MR-J5(W)-□B(-RJ) ([MELSEC iQ-R, RnMT/NC/RT, CR800-D], [MELSEC iQ-R, RnMT/RT, CR800-D]) ☞ Page 1463 External input signal in MR-JET-G ([MELSEC iQ-R, RnMT/NC/RT, CR800-D], [MELSEC iQ-R, RnMT/RT, CR800-D]) ☞ Page 1463 External input signal in MR-JE-B and MR-JE-BF ([MELSEC iQ-R, RnMT/NC/RT, CR800-D], [MELSEC iQ-R, RnMT/RT, CR800-D]) ☞ Page 1464 External input signal in MR-J4-GF(-RJ) ([MELSEC iQ-R, RnMT/NC/RT, CR800-D], [MELSEC iQ-R, RnMT/RT, CR800-D]) ☞ Page 1464 External input signal in MR-J4(W)-□B-RJ ([MELSEC iQ-R, RnMT/NC/RT, CR800-D], [MELSEC iQ-R, RnMT/RT, CR800-D])
DO	☞ Page 1464 External output signal in MR-J5-G(-RJ) and MR-J5W□-G ([MELSEC iQ-R, RnMT/NC/RT, CR800-D], [MELSEC iQ-R, RnMT/RT, CR800-D]) ☞ Page 1465 External output signal in MR-J5D□-G ([MELSEC iQ-R, RnMT/NC/RT, CR800-D], [MELSEC iQ-R, RnMT/RT, CR800-D]) ☞ Page 1465 External output signal in MR-J5(W)-□B(-RJ) ([MELSEC iQ-R, RnMT/NC/RT, CR800-D], [MELSEC iQ-R, RnMT/RT, CR800-D]) ☞ Page 1465 External output signal in MR-JET-G ([MELSEC iQ-R, RnMT/NC/RT, CR800-D], [MELSEC iQ-R, RnMT/RT, CR800-D]) ☞ Page 1465 External output signal in MR-JE-B and MR-JE-BF ([MELSEC iQ-R, RnMT/NC/RT, CR800-D], [MELSEC iQ-R, RnMT/RT, CR800-D]) ☞ Page 1466 External output signal in MR-J4-GF(-RJ) ([MELSEC iQ-R, RnMT/NC/RT, CR800-D], [MELSEC iQ-R, RnMT/RT, CR800-D]) ☞ Page 1466 External output signal in MR-J4(W)-□B-RJ ([MELSEC iQ-R, RnMT/NC/RT, CR800-D], [MELSEC iQ-R, RnMT/RT, CR800-D])
ALD	☞ Page 1466 Life Diagnosis ([MELSEC iQ-R, RnMT/NC/RT, CR800-D], [MELSEC iQ-R, RnMT/RT, CR800-D])
TMI	☞ Page 1466 Input signal for test operation (for test operation) ([MELSEC iQ-R, RnMT/NC/RT, CR800-D], [MELSEC iQ-R, RnMT/RT, CR800-D])
TMO	☞ Page 1467 Forced output of signal pin (for test operation) ([MELSEC iQ-R, RnMT/NC/RT, CR800-D], [MELSEC iQ-R, RnMT/RT, CR800-D])
TMD	☞ Page 1467 Set data (for test operation) ([MELSEC iQ-R, RnMT/NC/RT, CR800-D], [MELSEC iQ-R, RnMT/RT, CR800-D])

■Servo amplifier request ([MELSEC iQ-R, RnMT/NC/RT, CR800-D], [MELSEC iQ-R, RnMT/RT, CR800-D])

○: Available

×: Not available

Virtual device name	Name	Symbol	MR-J4(W)-□B(-RJ)	MR-J4-GF(-RJ)	MR-JE-□B	MR-JE-□BF	MR-J5-G(-RJ), MR-J5W□-G	MR-JET-G	MR-J5D□-G	MR-J5-□B(-RJ)
SP0	Status display data clear	-	○	○	○	○	○	○	○	○
SP1	Current alarm clear	-	○	○	○	○	○	○	○	○
SP2	Alarm history clear	-	○	○	○	○	○	○	○	○
SP3	External input signal prohibited	-	○	○	○	○	○	○	○	○
SP4	External output signal prohibited	-	○	○	○	○	○	○	○	○
SP5	External input signal resumed	-	○	○	○	○	○	○	○	○
SP6	External output signal resumed	-	○	○	○	○	○	○	○	○

When using the servo amplifier request, note the following.

Precautions	Description
When setting a device for a bit switch	Do not select [Alternate] for [Switch Action] of the bit switch.

■Operation mode selection ([MELSEC iQ-R, RnMT/NC/RT, CR800-D], [MELSEC iQ-R, RnMT/RT, CR800-D])

○: Available

×: Not available

Virtual device name	Name	Symbol	MR-J4(W)-□B(-RJ)	MR-J4-GF(-RJ)	MR-JE-□B	MR-JE-□BF	MR-J5-G(-RJ), MR-J5W□-G	MR-JET-G	MR-J5D□-G	MR-J5-□B(-RJ)
OM0	Normal mode (not test operation mode)	-	○	○	○	○	×	×	×	×
	Cancel test operation mode		×	×	×	×	○	○	○	○
OM1	JOG operation	-	○	○	○	○	○	○	○	○
OM2	Positioning operation	-	○	○	○	○	○	○	○	○
OM3	For manufacturer setting	-	×	×	×	×	×	×	×	×
OM4	Output signal (DO) forced output	-	○	○	○	○	○	○	○	○
OM5	One step sending	-	×	○	×	×	○	○	○	○
OM6	For manufacturer setting	-	×	×	×	×	×	×	×	×

When using the operation mode selection, note the following.

Precautions	Description
When setting a device for a bit switch	Do not select [Alternate] for [Switch Action] of the bit switch.

■Instruction demand (for test operation) ([MELSEC iQ-R, RnMT/NC/RT, CR800-D], [MELSEC iQ-R, RnMT/RT, CR800-D])

○: Available

×: Not available

Virtual device name	Name	Symbol	MR-J4(W)-□B(-RJ)	MR-J4-GF(-RJ)	MR-JE-□B	MR-JE-□BF	MR-J5-G(-RJ), MR-J5W□-G	MR-JET-G	MR-J5D□-G	MR-J5-□B(-RJ)
TMB1	Temporary stop command	-	○	○	○	○	×	×	×	×
	Pause		×	×	×	×	○	○	○	○
TMB2	Test operation (positioning operation) start command	-	○	○	○	○	○	○	○	○
TMB3	Forward rotation direction	-	○	○	○	○	○	○	○	○
TMB4	Reverse rotation direction	-	○	○	○	○	○	○	○	○
TMB5	Restart for remaining distance	-	○	○	○	○	○	○	○	○
TMB6	Remaining distance clear	-	○	○	○	○	○	○	○	○

When using the instruction demand (for test operation), note the following.

Precautions	Description
When setting a device for a bit switch	Do not select [Alternate] for [Switch Action] of the bit switch.

■One-touch tuning instruction ([MELSEC iQ-R, RnMT/NC/RT, CR800-D], [MELSEC iQ-R, RnMT/RT, CR800-D])

○: Available

×: Not available

Virtual device name	Name	Symbol	MR-J4(W)-□B(-RJ)	MR-J4-GF(-RJ)	MR-JE-□B	MR-JE-□BF	MR-J5-G(-RJ), MR-J5W□-G	MR-JET-G	MR-J5D□-G	MR-J5-□B(-RJ)
OTI0	One-touch tuning start command (Basic mode)	-	○	○	○	○	○	○	○	○
OTI1	One-touch tuning start command (High mode)	-	○	○	○	○	○	○	○	○
OTI2	One-touch tuning start command (Low mode)	-	○	○	○	○	○	○	○	○
OTI3	One-touch tuning stop command	-	○	○	○	○	○	○	○	○
OTI4	Return to initial value	-	○	○	○	○	○	○	○	○
OTI5	Return to value before adjustment	-	○	○	○	○	○	○	○	○

When using the one-touch tuning instruction, note the following.

Precautions	Description
When setting a device for a bit switch	Do not select [Alternate] for [Switch Action] of the bit switch.

■Gear failure diagnosis instruction ([MELSEC iQ-R, RnMT/NC/RT, CR800-D], [MELSEC iQ-R, RnMT/RT, CR800-D])

○: Available

×: Not available

Virtual device name	Name	Symbol	MR-J4(W)-□B(-RJ)	MR-J4-GF(-RJ)	MR-JE-□B	MR-JE-□BF	MR-J5-G(-RJ), MR-J5W□-G	MR-JET-G	MR-J5D□-G	MR-J5-□B(-RJ)
GFDI0	Backlash estimation start command	-	×	×	×	×	○	×	○	○
GFDI1	Backlash estimation stop command	-	×	×	×	×	○	×	○	○

When using the gear failure diagnosis instruction, note the following.

Precautions	Description
When setting a device for a bit switch	Do not select [Alternate] for [Switch Action] of the bit switch.

■Encoder communication circuit diagnosis instruction ([MELSEC iQ-R, RnMT/NC/RT, CR800-D], [MELSEC iQ-R, RnMT/RT, CR800-D])

○: Available

×: Not available

Virtual device name	Name	Symbol	MR-J4(W)-□B(-RJ)	MR-J4-GF(-RJ)	MR-JE-□B	MR-JE-□BF	MR-J5-G(-RJ), MR-J5W□-G	MR-JET-G	MR-J5D□-G	MR-J5-□B(-RJ)
ECCDI0	CN2 encoder communication circuit diagnosis start command	-	×	×	×	×	○	○	○	○
ECCDI1	CN2L encoder communication circuit diagnosis start command	-	×	×	×	×	○	○	○	○

When using the encoder communication circuit diagnosis instruction, note the following.

Precautions	Description
When setting a device for a bit switch	Do not select [Alternate] for [Switch Action] of the bit switch.

■Basic parameter ([MELSEC iQ-R, RnMT/NC/RT, CR800-D], [MELSEC iQ-R, RnMT/RT, CR800-D])

Use an appropriate device according to the write destination of the servo amplifier.

- PA1 to PA44: Writing data to the RAM of a servo amplifier
- PA1001 to PA1044: Writing data to the FlashROM or EEPROM of a servo amplifier

For the parameters prefixed by an asterisk (*), setting becomes effective when the power is turned off once and back on after setting the parameter data.

○: Available

×: Not available

Virtual device name	Name	Symbol	MR-J4(W)-□B(-RJ)	MR-J4-GF(-RJ)	MR-JE-□B	MR-JE-□BF	MR-J5-G(-RJ), MR-J5W□-G	MR-JET-G	MR-J5D□-G	MR-J5-□B(-RJ)
PA1, PA1001	Operation mode	**STY	○	○	×	×	○	×	○	○
PA2, PA1002	Regenerative brake option	**REG	○	○	○	○	○	○	○	○
PA3, PA1003	Absolute position detection system	*ABS	○	○	○	○	○	○	○	○
PA4, PA1004	Function selection A-1	*AOP1	○	○	○	○	○	○	○	○
PA5, PA1005	For manufacturer setting	-	×	×	×	×	×	×	×	×
PA6, PA1006	Electronic gear numerator	*CMX	×	○	×	×	○	○	○	○
PA7, PA1007	Electronic gear denominator	*CDV	×	○	×	×	○	○	○	○
PA8, PA1008	Auto tuning mode	ATU	○	○	○	○	○	○	○	○
PA9, PA1009	Auto tuning response	RSP	○	○	○	○	○	○	○	○
PA10, PA1010	In-position range	INP	○	○	○	○	○	○	○	○
PA11, PA1011	Forward rotation torque limit/ positive direction thrust limit	TLP	×	○	×	×	×	×	×	×
	Forward rotation torque limit		×	×	×	×	○	○	○	○
PA12, PA1012	Reverse rotation torque limit/ negative direction thrust limit	TLN	×	○	×	×	×	×	×	×
	Reverse rotation torque limit		×	×	×	×	○	○	○	○
PA13, PA1013	For manufacturer setting	-	×	×	×	×	×	×	×	×
PA14, PA1014	Rotation direction selection/ travel direction selection	*POL	○	○	○	○	×	×	×	×
	Moving direction selection		×	×	×	×	○	○	○	○
PA15, PA1015	Encoder output pulses	*ENR	○	○	×	×	○	×	○	○
PA16, PA1016	Encoder output pulses 2	*ENR2	○	○	×	×	○	×	○	○
PA17, PA1017	Servo motor series setting	**MSR	○	○	×	×	○	×	○	○
PA18, PA1018	Servo motor type setting	**MTY	○	○	×	×	○	×	○	○
PA19, PA1019	Parameter block	*BLK	○	○	○	○	○	○	○	○
PA20, PA1020	Tough drive setting	*TDS	○	○	○	○	○	○	○	○
PA21, PA1021	Function selection A-3	*AOP3	○	○	○	○	○	○	○	○
PA22, PA1022	Position control composition selection	**PCS	○	○	×	×	○	○	○	○

A

Virtual device name	Name	Symbol	MR-J4(W)-□B(-RJ)	MR-J4-GF(-RJ)	MR-JE-□B	MR-JE-□BF	MR-J5-G(-RJ), MR-J5W□-G	MR-JET-G	MR-J5D□-G	MR-J5-□B(-RJ)
PA23, PA1023	Drive recorder arbitrary alarm trigger setting	DRAT	○	○	○	○	○	○	○	○
PA24, PA1024	Function selection A-4	AOP4	○	○	○	○	○	○	○	○
PA25, PA1025	One-touch tuning - Overshoot permissible level	OTHOV	○	○	○	○	○	○	○	○
PA26, PA1026	Function selection A-5	*AOP5	○	○	○	○	○	○	○	○
PA27, PA1027	Hot-line forced stop function	*HTL	×	×	○	○	×	×	×	×
PA28, PA1028	Function selection A-6	**AOP6	×	×	×	×	○	○	○	○
PA29 to PA33, PA1029 to PA1033	For manufacturer setting	-	×	×	×	×	×	×	×	×
PA34, PA1034	Quick tuning permissible travel distance	QDIS	×	×	×	×	○	○	○	○
PA35 to PA44, PA1035 to PA1044	For manufacturer setting	-	×	×	×	×	×	×	×	×

■Gain filter parameter ([MELSEC iQ-R, RnMT/NC/RT, CR800-D], [MELSEC iQ-R, RnMT/RT, CR800-D])

Use an appropriate device according to the write destination of the servo amplifier.

- PB1 to PB92: Writing data to the RAM of a servo amplifier
- PB1001 to PB1092: Writing data to the FlashROM or EEPROM of a servo amplifier

For the parameters prefixed by an asterisk (*), setting becomes effective when the power is turned off once and back on after setting the parameter data.

○: Available

×: Not available

Virtual device name	Name	Symbol	MR-J4(W)-□B(-RJ)	MR-J4-GF(-RJ)	MR-JE-□B	MR-JE-□BF	MR-J5-G(-RJ), MR-J5W□-G	MR-JET-G	MR-J5D□-G	MR-J5-□B(-RJ)
PB1, PB1001	Adaptive tuning mode (Adaptive filter II)	FILT	○	○	○	○	○	○	○	○
PB2, PB1002	Vibration suppression control tuning mode (advanced vibration suppression control II)	VRFT	○	○	○	○	○	○	○	○
PB3, PB1003	Torque feedback loop gain	TFBGN	○	×	○	○	×	×	○	×
PB4, PB1004	Feed forward gain	FFC	○	○	○	○	○	○	○	○
PB5, PB1005	For manufacturer setting	-	×	×	×	×	×	×	×	×
PB6, PB1006	Load to motor inertia ratio/ load to motor mass ratio	GD2	○	○	○	○	○	○	○	○
PB7, PB1007	Model control gain	PG1	○	○	○	○	○	○	○	○
PB8, PB1008	Position control gain	PG2	○	○	○	○	○	○	○	○
PB9, PB1009	Speed control gain	VG2	○	○	○	○	○	○	○	○
PB10, PB1010	Speed integral compensation	VIC	○	○	○	○	○	○	○	○
PB11, PB1011	Speed differential compensation	VDC	○	○	○	○	○	○	○	○
PB12, PB1012	Overshoot amount compensation	OVA	○	○	○	○	○	○	○	○
PB13, PB1013	Machine resonance suppression filter 1	NH1	○	○	○	○	○	○	○	○
PB14, PB1014	Notch shape selection 1	NHQ1	○	○	○	○	○	○	○	○
PB15, PB1015	Machine resonance suppression filter 2	NH2	○	○	○	○	○	○	○	○
PB16, PB1016	Notch shape selection 2	NHQ2	○	○	○	○	○	○	○	○
PB17, PB1017	Shaft resonance suppression filter	NHF	○	○	○	○	○	○	○	○
PB18, PB1018	Low-pass filter setting	LPF	○	○	○	○	○	○	○	○
PB19, PB1019	Vibration suppression control 1 - Vibration frequency	VRF11	○	○	○	○	○	○	○	○
PB20, PB1020	Vibration suppression control 1 - Resonance frequency	VRF12	○	○	○	○	○	○	○	○
PB21, PB1021	Vibration suppression control 1 - Vibration frequency damping	VRF13	○	○	○	○	○	○	○	○

A

Virtual device name	Name	Symbol	MR-J4(W)-□B(-RJ)	MR-J4-GF(-RJ)	MR-JE-□B	MR-JE-□BF	MR-J5-G(-RJ), MR-J5W□-G	MR-JET-G	MR-J5D□-G	MR-J5-□B(-RJ)
PB22, PB1022	Vibration suppression control 1 - Resonance frequency damping	VRF14	○	○	○	○	○	○	○	○
PB23, PB1023	Low-pass filter setting	VFBF	○	○	○	○	○	○	○	○
PB24, PB1024	Slight vibration suppression control	*MVS	○	○	○	○	○	○	○	○
PB25, PB1025	Function selection B-1	*BOP1	○	○	○	○	○	○	○	○
PB26, PB1026	Gain switching function	*CDP	○	○	○	○	○	○	○	○
PB27, PB1027	Gain switching condition	CDL	○	○	○	○	○	○	○	○
PB28, PB1028	Gain switching time constant	CDT	○	○	○	○	○	○	○	○
PB29, PB1029	Load to motor inertia ratio/ load to motor mass ratio after gain switching	GD2B	○	○	○	○	○	○	○	○
PB30, PB1030	Position loop gain after gain switching	PG2B	○	○	○	○	○	○	○	○
PB31, PB1031	Speed loop gain after gain switching	VG2B	○	○	○	○	○	○	○	○
PB32, PB1032	Speed integral compensation after gain switching	VICB	○	○	○	○	○	○	○	○
PB33, PB1033	Vibration suppression control 1 - Vibration frequency after gain switching	VRF11B	○	○	○	○	○	○	○	○
PB34, PB1034	Vibration suppression control 1 - Resonance frequency after gain switching	VRF12B	○	○	○	○	○	○	○	○
PB35, PB1035	Vibration suppression control 1 - Vibration frequency damping after gain switching	VRF13B	○	○	○	○	○	○	○	○
PB36, PB1036	Vibration suppression control 1 - Resonance frequency damping after gain switching	VRF14B	○	○	○	○	○	○	○	○
PB37 to PB44, PB1037 to PB1044	For manufacturer setting	-	×	×	×	×	×	×	×	×
PB45, PB1045	Command notch filter	CNHF	○	○	○	○	○	○	○	○
PB46, PB1046	Machine resonance suppression filter 3	NH3	○	○	○	○	○	○	○	○
PB47, PB1047	Notch shape selection 3	NHQ3	○	○	○	○	○	○	○	○
PB48, PB1048	Machine resonance suppression filter 4	NH4	○	○	○	○	○	○	○	○
PB49, PB1049	Notch shape selection 4	NHQ4	○	○	○	○	○	○	○	○
PB50, PB1050	Machine resonance suppression filter 5	NH5	○	○	○	○	○	○	○	○
PB51, PB1051	Notch shape selection 5	NHQ5	○	○	○	○	○	○	○	○
PB52, PB1052	Vibration suppression control 2 - Vibration frequency	VRF21	○	○	○	○	○	○	○	○
PB53, PB1053	Vibration suppression control 2 - Resonance frequency	VRF22	○	○	○	○	○	○	○	○

Virtual device name	Name	Symbol	MR-J4(W)-□B(-RJ)	MR-J4-GF(-RJ)	MR-JE-□B	MR-JE-□BF	MR-J5-G(-RJ), MR-J5W□-G	MR-JET-G	MR-J5D□-G	MR-J5-□B(-RJ)
PB54, PB1054	Vibration suppression control 2 - Vibration frequency damping	VRF23	○	○	○	○	○	○	○	○
PB55, PB1055	Vibration suppression control 2 - Resonance frequency damping	VRF24	○	○	○	○	○	○	○	○
PB56, PB1056	Vibration suppression control 2 - Vibration frequency after gain switching	VRF21B	○	○	○	○	○	○	○	○
PB57, PB1057	Vibration suppression control 2 - Resonance frequency after gain switching	VRF22B	○	○	○	○	○	○	○	○
PB58, PB1058	Vibration suppression control 2 - Vibration frequency damping after gain switching	VRF23B	○	○	○	○	○	○	○	○
PB59, PB1059	Vibration suppression control 2 - Resonance frequency damping after gain switching	VRF24B	○	○	○	○	○	○	○	○
PB60, PB1060	Model loop gain after gain switching	PG1B	○	○	○	○	○	○	○	○
PB61 to PB64, PB1061 to PB1064	For manufacturer setting	-	×	×	×	×	×	×	×	×
PB65, PB1065	Gain changing 2 condition	CDL2	×	×	×	×	○	○	○	○
PB66, PB1066	Gain changing 2 time constant	CDT2	×	×	×	×	○	○	○	○
PB67, PB1067	Gain changing 2 - Load in. mom. rat./Load mass rat.	GD2C	×	×	×	×	○	○	○	○
PB68, PB1068	Gain changing 2 position loop gain	PG2C	×	×	×	×	○	○	○	○
PB69, PB1069	Gain changing 2 speed loop gain	VG2C	×	×	×	×	○	○	○	○
PB70, PB1070	Gain changing 2 speed integral compensation	VICC	×	×	×	×	○	○	○	○
PB71, PB1071	Vib. supp. ctrl. 1 - Vib. frq. after gain changing 2	VRF11C	×	×	×	×	○	○	○	○
PB72, PB1072	Vib. supp. ctrl. 1 - Res. frq. after gain changing 2	VRF12C	×	×	×	×	○	○	○	○
PB73, PB1073	Vib. supp. ctrl. 1 - Vib. frq. damping aft. gain chng2	VRF13C	×	×	×	×	○	○	○	○
PB74, PB1074	Vib. supp. ctrl. 1 - Res. frq. damping aft. gain chng2	VRF14C	×	×	×	×	○	○	○	○
PB75, PB1075	Vib. supp. ctrl. 2 - Vib. frq. after gain changing 2	VRF21C	×	×	×	×	○	○	○	○
PB76, PB1076	Vib. supp. ctrl. 2 - Res. frq. after gain changing 2	VRF22C	×	×	×	×	○	○	○	○
PB77, PB1077	Vib. supp. ctrl. 2 - Vib. frq. damping aft. gain chng2	VRF23C	×	×	×	×	○	○	○	○
PB78, PB1078	Vib. supp. ctrl. 2 - Res. frq. damping aft. gain chng2	VRF24C	×	×	×	×	○	○	○	○
PB79, PB1079	Gain changing 2 model loop gain	PG1C	×	×	×	×	○	○	○	○
PB80, PB1080	For manufacturer setting	-	×	×	×	×	×	×	×	×
PB81, PB1081	Command filter	*CFIL	×	×	×	×	○	○	○	○

A

Virtual device name	Name	Symbol	MR-J4(W)-□B(-RJ)	MR-J4-GF(-RJ)	MR-JE-□B	MR-JE-□BF	MR-J5-G(-RJ), MR-J5W□-G	MR-JET-G	MR-J5D□-G	MR-J5-□B(-RJ)
PB82, PB1082	Position command smoothing filter time constant	PFT	×	×	×	×	○	○	○	○
PB83 to PB92, PB1083 to PB1092	For manufacturer setting	-	×	×	×	×	×	×	×	×

■Extension setting parameter ([MELSEC iQ-R, RnMT/NC/RT, CR800-D], [MELSEC iQ-R, RnMT/RT, CR800-D])

Use an appropriate device according to the write destination of the servo amplifier.

- PC1 to PC90: Writing data to the RAM of a servo amplifier
- PC1001 to PC1090: Writing data to the FlashROM or EEPROM of a servo amplifier

For the parameters prefixed by an asterisk (*), setting becomes effective when the power is turned off once and back on after setting the parameter data.

○: Available

×: Not available

Virtual device name	Name	Symbol	MR-J4(W)-□B(-RJ)	MR-J4-GF(-RJ)	MR-JE-□B	MR-JE-□BF	MR-J5-G(-RJ), MR-J5W□-G	MR-JET-G	MR-J5D□-G	MR-J5-□B(-RJ)
PC1, PC1001	Error excessive alarm level	ERZ	○	○	○	○	○	○	○	○
PC2, PC1002	Electromagnetic brake sequence output	MBR	○	○	○	○	○	○	○	○
PC3, PC1003	Encoder output pulse selection	*ENRS	○	○	×	×	○	×	○	○
PC4, PC1004	Function selection C-1	**COP1	○	○	○	○	○	○	○	○
PC5, PC1005	Function selection C-2	**COP2	○	○	○	○	○	○	○	○
PC6, PC1006	Function selection C-3	*COP3	○	○	○	○	○	○	○	○
PC7, PC1007	Zero speed	ZSP	○	○	○	○	○	○	○	○
PC8, PC1008	Overspeed alarm detection level	OSL	○	○	○	○	○	○	○	○
PC9, PC1009	Analog monitor 1 output	MOD1	○	○	×	×	○	×	○	○
PC10, PC1010	Analog monitor 2 output	MOD2	○	○	×	×	○	×	○	○
PC11, PC1011	Analog monitor 1 offset	MO1	○	○	×	×	○	×	○	○
PC12, PC1012	Analog monitor 2 offset	MO2	○	○	×	×	○	×	○	○
PC13, PC1013	Analog monitor - Feedback position output standard data - Low	MOSDL	○	×	×	×	×	×	×	×
PC14, PC1014	Analog monitor - Feedback position output standard data - High	MOSDH	○	×	×	×	×	×	×	×
PC15, PC1015	For manufacturer setting	-	×	×	×	×	×	×	×	×
PC16, PC1016	Function selection C-3A	*COP3A	×	×	×	×	○	×	○	○
PC17, PC1017	Function selection C-4	**COP4	○	○	○	○	○	×	○	○
PC18, PC1018	Function selection C-5	*COP5	○	○	○	○	×	×	×	×
PC19, PC1019	Function selection C-6	*COP6	×	○	×	×	○	○	○	○
PC20, PC1020	Function selection C-7	*COP7	○	○	○	○	○	○	○	○
PC21, PC1021	Alarm history clear	*BPS	○	○	○	○	○	○	○	○

A

Virtual device name	Name	Symbol	MR-J4(W)-□B(-RJ)	MR-J4-GF(-RJ)	MR-JE-□B	MR-JE-□BF	MR-J5-G(-RJ), MR-J5W□-G	MR-JET-G	MR-J5D□-G	MR-J5-□B(-RJ)
PC22 and PC23, PC1022 and PC1023	For manufacturer setting	-	×	×	×	×	×	×	×	×
PC24, PC1024	Forced stop deceleration time constant	RSBR	○	○	○	○	○	○	○	○
PC25, PC1025	For manufacturer setting	-	×	×	×	×	×	×	×	×
PC26, PC1026	Function selection C-8	**COP8	○	○	×	×	○	×	○	○
PC27, PC1027	Function selection C-9	**COP9	○	○	×	×	○	○	○	○
PC28, PC1028	For manufacturer setting	-	×	×	×	×	×	×	×	×
PC29, PC1029	Function selection C-B	*COPB	○	○	○	○	○	○	○	○
PC30, PC1030	For manufacturer setting	-	×	×	×	×	×	×	×	×
PC31, PC1031	Vertical axis freefall prevention compensation amount	RSUP1	○	○	○	○	○	○	○	○
PC32 to PC36, PC1032 to PC1036	For manufacturer setting	-	×	×	×	×	×	×	×	×
PC37, PC1037	Function selection C-D	**COPD	×	×	×	×	×	×	×	○
PC38, PC1038	Error excessive warning level	ERW	○	○	○	○	○	○	○	○
PC39, PC1039	Collision detection level 1	TLW1	×	×	×	×	×	×	×	○
PC40, PC1040	Collision detection level 2	TLW2	×	×	×	×	×	×	×	○
PC41, PC1041	Function selection C-J	*COPJ	×	×	×	×	×	×	○	○
PC42 to PC44, PC1042 to PC1044	For manufacturer setting	-	×	×	×	×	×	×	×	×
PC45, PC1045	Drive unit function selection 1	*DUOP1	×	×	×	×	×	×	×	○
PC46, PC1046	Drive unit function selection 2	*DUOP2	×	×	×	×	×	×	○	○
PC47 to PC64, PC1047 to PC1064	For manufacturer setting	-	×	×	×	×	×	×	×	×
PC65, PC1065	Zero speed 2 level	ZSP2L	×	×	×	×	○	×	○	○
PC66, PC1066	Zero speed 2 filter time	ZSP2F	×	×	×	×	○	×	○	○
PC67, PC1067	Following error output level	FEWL	×	○	×	×	×	×	×	×
		FEW	×	×	×	×	○	○	○	○
PC68, PC1068	Following error output level	FEWH	×	○	×	×	×	×	×	×

Virtual device name	Name	Symbol	MR-J4(W)-□B(-RJ)	MR-J4-GF(-RJ)	MR-JE-□B	MR-JE-□BF	MR-J5-G(-RJ), MR-J5W□-G	MR-JET-G	MR-J5D□-G	MR-J5-□B(-RJ)
PC69, PC1069	Following error output filtering time	FEWF	×	○	×	×	○	○	○	○
PC70, PC1070	In-position 2 output range	INP2R	×	×	×	×	○	×	○	○
PC71, PC1071	In-position 2 output filter time	INP2F	×	×	×	×	○	×	○	○
PC72, PC1072	Speed reached 2 output range	SA2R	×	×	×	×	○	×	○	○
PC73, PC1073	Speed reached 2 output filter time	SA2F	×	×	×	×	○	×	○	○
PC74 to PC75, PC1074 to PC1075	For manufacturer setting	-	×	×	×	×	×	×	×	×
PC76, PC1076	Function selection C-E	*COPE	×	○	×	×	○	○	○	○
PC77, PC1077	Internal torque limit 2	TL2	×	○	×	×	×	×	×	○
PC78, PC1078	Function selection C-F	*COPF	×	×	×	×	○	○	○	○
PC79, PC1079	Function selection C-G	*COPG	×	×	×	×	○	○	○	○
PC80, PC1080	For manufacturer setting	-	×	×	×	×	×	×	×	×
PC81, PC1081	Function selection C-H	**COPH	×	×	×	×	○	×	×	○
PC82 to PC90, PC1082 to PC1090	For manufacturer setting	-	×	×	×	×	×	×	×	×

A

■I/O setting parameter ([MELSEC iQ-R, RnMT/NC/RT, CR800-D], [MELSEC iQ-R, RnMT/RT, CR800-D])

Use an appropriate device according to the write destination of the servo amplifier.

- PD1 to PD72: Writing data to the RAM of a servo amplifier
- PD1001 to PD1072: Writing data to the FlashROM or EEPROM of a servo amplifier

For the parameters prefixed by an asterisk (*), setting becomes effective when the power is turned off once and back on after setting the parameter data.

○: Available

×: Not available

Virtual device name	Name	Symbol	MR-J4(W)-□B(-RJ)	MR-J4-GF(-RJ)	MR-JE-□B	MR-JE-□BF	MR-J5-G(-RJ), MR-J5W□-G	MR-JET-G	MR-J5D□-G	MR-J5-□B(-RJ)
PD1, PD1001	Input signal automatic on selection 1	*DIA1	×	○	×	×	○	○	○	○
PD2, PD1002	Input signal automatic on selection 2	*DIA2	○	×	×	○	×	×	×	○
PD3, PD1003	Input device selection 1	*DI1	×	○	×	○	○	○	○	○
PD4, PD1004	Input device selection 2	*DI2	×	○	×	○	○	○	○	○
PD5, PD1005	Input device selection 3	*DI3	×	○	×	○	○	○	○	○
PD6, PD1006	For manufacturer setting	-	×	×	×	×	×	×	×	×
PD7, PD1007	Output device selection 1	*DO1	○	○	○	○	○	○	○	○
PD8, PD1008	Output device selection 2	*DO2	○	○	×	○	○	○	○	○
PD9, PD1009	Output device selection 3	*DO3	○	○	×	○	○	○	○	○
PD10, PD1010	For manufacturer setting	-	×	×	×	×	×	×	×	×
PD11, PD1011	Input filter setting	*DIF	○	○	○	○	○	○	○	○
PD12, PD1012	Function selection D-1	*DOP1	○	○	○	○	○	○	○	○
PD13, PD1013	Function selection D-2	*DOP2	○	○	○	○	○	○	○	○
PD14, PD1014	Function selection D-3	*DOP3	○	○	○	○	○	○	○	○
PD15, PD1015	Driver communication setting	*IDCS	○	×	×	×	×	×	×	○
PD16, PD1016	Driver communication setting - Master - Transmit data selection 1	*MD1	○	×	×	×	×	×	×	○
PD17, PD1017	Driver communication setting - Master - Transmit data selection 2	*MD2	○	×	×	×	×	×	×	○
PD18 and PD19, PD1018 and PD1019	For manufacturer setting	-	×	×	×	×	×	×	×	×
PD20, PD1020	Driver communication setting - Slave - Master axis No. selection 1	*SLA1	○	×	×	×	×	×	×	○

Virtual device name	Name	Symbol	MR-J4(W)-□B(-RJ)	MR-J4-GF(-RJ)	MR-JE-□B	MR-JE-□BF	MR-J5-G(-RJ), MR-J5W□-G	MR-JET-G	MR-J5D□-G	MR-J5-□B(-RJ)
PD21 to PD29, PD1021 to PD1029	For manufacturer setting	-	×	×	×	×	×	×	×	×
PD30, PD1030	Master-slave operation - Torque command coefficient on slave	TLC	○	×	×	×	×	×	×	○
PD31, PD1031	Master-slave operation - Speed limit coefficient on slave	VLC	○	×	×	×	×	×	×	○
PD32, PD1032	Master-slave operation - Speed limit adjusted value on slave	VLL	○	×	×	×	×	×	×	○
PD33 to PD36, PD1033 to PD1036	For manufacturer setting	-	×	×	×	×	×	×	×	×
PD37, PD1037	Touch probe function selection	*TPOP	×	○	×	×	×	×	×	×
PD38, PD1038	Input device selection 4	*DI4	×	×	×	×	○	×	○	○
PD39, PD1039	Input device selection 5	*DI5	×	×	×	×	○	×	○	○
PD40, PD1040	For manufacturer setting	-	×	×	×	×	×	×	×	○
PD41, PD1041	Function selection D-4	*DOP4	×	○	×	×	○	○	○	○
PD42 to PD50, PD1042 to PD1050	For manufacturer setting	-	×	×	×	×	×	×	×	×
PD51, PD1051	Input device selection 3-2	*DI3W2	×	×	×	×	○	×	○	○
PD52 to PD59, PD1052 to PD1059	For manufacturer setting	-	×	×	×	×	×	×	×	×
PD60, PD1060	DI pin polarity selection	*DIP	×	×	×	×	○	○	○	○
PD61 to PD72, PD1061 to PD1072	For manufacturer setting	-	×	×	×	×	×	×	×	×

A

■Option unit parameter ([MELSEC iQ-R, RnMT/NC/RT, CR800-D], [MELSEC iQ-R, RnMT/RT, CR800-D])

Use an appropriate device according to the write destination of the servo amplifier.

- PO1 to PO2: Writing data to the RAM of a servo amplifier
- PO1001 to PO1002: Writing data to the FlashROM or EEPROM of a servo amplifier

○: Available

×: Not available

Virtual device name	Name	Symbol	MR-J4(W)-□B(-RJ)	MR-J4-GF(-RJ)	MR-JE-□B	MR-JE-□BF	MR-J5-G(-RJ), MR-J5W□-G	MR-JET-G	MR-J5D□-G	MR-J5-□B(-RJ)
PO1 to PO2, PO1001 to PO1002	For manufacturer setting	-	×	×	×	×	×	×	×	×

■Special parameter ([MELSEC iQ-R, RnMT/NC/RT, CR800-D], [MELSEC iQ-R, RnMT/RT, CR800-D])

Use an appropriate device according to the write destination of the servo amplifier.

- PS1 to PS99: Writing data to the RAM of a servo amplifier
- PS1001 to PS1099: Writing data to the FlashROM or EEPROM of a servo amplifier

○: Available

×: Not available

Virtual device name	Name	Symbol	MR-J4(W)-□B(-RJ)	MR-J4-GF(-RJ)	MR-JE-□B	MR-JE-□BF	MR-J5-G(-RJ), MR-J5W□-G	MR-JET-G	MR-J5D□-G	MR-J5-□B(-RJ)
PS1 to PS99, PS1001 to PS1099	For manufacturer setting	-	×	×	×	×	×	×	×	×

■Multi encoder parameter ([MELSEC iQ-R, RnMT/NC/RT, CR800-D], [MELSEC iQ-R, RnMT/RT, CR800-D])

Use an appropriate device according to the write destination of the servo amplifier.

- PU1 to PU44: Writing data to the RAM of a servo amplifier
- PU1001 to PU1044: Writing data to the FlashROM or EEPROM of a servo amplifier

○: Available

×: Not available

Virtual device name	Name	Symbol	MR-J4(W)-□B(-RJ)	MR-J4-GF(-RJ)	MR-JE-□B	MR-JE-□BF	MR-J5-G(-RJ), MR-J5W□-G	MR-JET-G	MR-J5D□-G	MR-J5-□B(-RJ)
PU1 to PU44, PU1001 to PU1044	For manufacturer setting	-	×	×	×	×	×	×	×	×

■Positioning control parameter ([MELSEC iQ-R, RnMT/NC/RT, CR800-D], [MELSEC iQ-R, RnMT/RT, CR800-D])

Use an appropriate device according to the write destination of the servo amplifier.

- PT1 to PT90: Writing data to the RAM of a servo amplifier
- PT1001 to PT1090: Writing data to the FlashROM or EEPROM of a servo amplifier

For the parameters prefixed by an asterisk (*), setting becomes effective when the power is turned off once and back on after setting the parameter data.

○: Available

×: Not available

Virtual device name	Name	Symbol	MR-J4(W)-□B(-RJ)	MR-J4-GF(-RJ)	MR-JE-□B	MR-JE-□BF	MR-J5-G(-RJ), MR-J5W□-G	MR-JET-G	MR-J5D□-G	MR-J5-□B(-RJ)
PT1, PT1001	Command mode selection	**CTY	×	○	×	×	○	○	○	×
PT2, PT1002	Function selection T-1	*TOP1	×	×	×	×	○	×	○	×
PT3, PT1003	Feeding function selection	*FTY	×	○	×	×	×	×	×	×
PT4, PT1004	For manufacturer setting	-	×	×	×	×	×	×	×	×
PT5, PT1005	Home position return speed	ZRF	×	○	×	×	○	○	○	×
PT6, PT1006	Creep speed	CRF	×	○	×	×	○	○	○	×
PT7, PT1007	Home position shift distance	ZST	×	○	×	×	○	○	○	×
PT8, PT1008	Home position return position data	ZPS	×	×	×	×	○	○	○	×
PT9, PT1009	Moving distance after proximity dog	DCT	×	○	×	×	○	○	○	×
PT10, PT1010	Stopper type home position return stopper time	ZTM	×	○	×	×	○	○	○	×
PT11, PT1011	Stopper type home position return torque limit value	ZTT	×	○	×	×	○	○	○	×
PT12, PT1012	Rough match output range	CRP	×	○	×	×	○	×	○	×
PT13, PT14, PT1013, PT1014	For manufacturer setting	-	×	×	×	×	×	×	×	×
PT15, PT1015	Software limit +	LMPL	×	○	×	×	×	×	×	×
	Software position limit+	LMP	×	×	×	×	○	○	○	×
PT16, PT1016	Software limit +	LMPH	×	○	×	×	×	×	×	×
PT17, PT1017	Software limit -	LMNL	×	○	×	×	×	×	×	×
	Software position limit-	LMN	×	×	×	×	○	○	○	×
PT18, PT1018	Software limit -	LMNH	×	○	×	×	×	×	×	×
PT19, PT1019	Position range output address +	*LPPL	×	○	×	×	×	×	×	×
	Position range output 1 address+	*LPP1	×	×	×	×	○	×	○	×
PT20, PT1020	Position range output address +	*LPPH	×	○	×	×	×	×	×	×
PT21, PT1021	Position range output address -	*LNPL	×	○	×	×	×	×	×	×
	Position range output 1 address-	*LNP1	×	×	×	×	○	×	○	×

A

Virtual device name	Name	Symbol	MR-J4(W)-□B(-RJ)	MR-J4-GF(-RJ)	MR-JE-□B	MR-JE-□BF	MR-J5-G(-RJ), MR-J5W□-G	MR-JET-G	MR-J5D□-G	MR-J5-□B(-RJ)
PT22, PT1022	Position range output address -	*LNPH	×	○	×	×	×	×	×	×
PT23 to PT28, PT1023 to PT1028	For manufacturer setting	-	×	×	×	×	×	×	×	×
PT29, PT1029	Function selection T-3	*TOP3	×	○	×	×	○	○	○	×
PT30 to PT33, PT1030 to PT1033	For manufacturer setting	-	×	×	×	×	×	×	×	×
PT34, PT1034	Point table default	*PDEF	×	○	×	×	×	×	×	×
	Positioning operation data default	*PDEF	×	×	×	×	×	×	○	×
PT35 to PT37, PT1035 to PT1037	For manufacturer setting	-	×	×	×	×	×	×	×	×
PT38, PT1038	Function selection T-7	*TOP7	×	×	×	×	×	×	○	×
PT39 to PT40, PT1039 to PT1040	For manufacturer setting	-	×	×	×	×	×	×	×	×
PT41, PT1041	Home position return inhibit selection	ORP	×	○	×	×	×	×	×	×
	Function selection T-8	TOP8	×	×	×	×	○	○	○	×
PT42 to PT44, PT1042 to PT1044	For manufacturer setting	-	×	×	×	×	×	×	×	×
PT45, PT1045	Home position return method	HMM	×	○	×	×	○	○	○	×
PT46 to PT48, PT1046 to PT1048	For manufacturer setting	-	×	×	×	×	×	×	×	×
PT49, PT1049	Acceleration time constant	STA	×	○	×	×	○	×	○	×
PT50, PT1050	Deceleration time constant	STB	×	○	×	×	○	×	○	×
PT51, PT1051	S-pattern acceleration/ deceleration time constant	STC	×	○	×	×	○	×	○	×
PT52, PT1052	For manufacturer setting	-	×	×	×	×	×	×	×	×
PT53, PT1053	Torque slope	TQS	×	×	×	×	○	×	○	×
PT54, PT1054	For manufacturer setting	-	×	×	×	×	×	×	×	×
PT55, PT1055	Function selection T-8	*TOP8	×	○	×	×	×	×	×	×
	Function selection T-10	*TOP10	×	×	×	×	○	○	○	×
PT56, PT1056	Home position return acceleration time constant	HMA	×	○	×	×	○	○	○	×

Virtual device name	Name	Symbol	MR-J4(W)-□B(-RJ)	MR-J4-GF(-RJ)	MR-JE-□B	MR-JE-□BF	MR-J5-G(-RJ), MR-J5W□-G	MR-JET-G	MR-J5D□-G	MR-J5-□B(-RJ)
PT57, PT1057	Home position return deceleration time constant	HMB	×	○	×	×	○	○	○	×
PT58 to PT61, PT1058 to PT1061	For manufacturer setting	-	×	×	×	×	×	×	×	×
PT62, PT1062	Remote register-based position/speed specifying method selection	*DSS	×	○	×	×	×	×	×	×
PT63, PT64, PT1063, PT1064	For manufacturer setting	-	×	×	×	×	×	×	×	×
PT65, PT1065	Jog speed command	PVC	×	○	×	×	×	×	×	×
	Profile speed command		×	×	×	×	○	×	○	×
PT66, PT1066	Maximum profile speed	MPVC	×	×	×	×	○	×	○	×
PT67, PT1067	Speed limit	VLMT	×	○	×	×	○	○	○	×
PT68, PT1068	Function selection T-11	TOP11	×	×	×	×	○	○	○	×
PT69, PT1069	Home position shift distance (extension parameter)	ZSTH	×	○	×	×	×	×	×	×
PT70, PT1070	For manufacturer setting	-	×	×	×	×	×	×	×	×
PT71, PT1071	Travel distance after proximity dog (extension parameter)	DCTH	×	○	×	×	×	×	×	×
PT72 to PT90, PT1072 to PT1090	For manufacturer setting	-	×	×	×	×	×	×	×	×

A

■Motor extension parameter, linear servo motor/DD motor setting parameter ([MELSEC iQ-R, RnMT/NC/RT, CR800-D], [MELSEC iQ-R, RnMT/RT, CR800-D])

Use an appropriate device according to the write destination of the servo amplifier.

- PL1 to PL72: Writing data to the RAM of a servo amplifier
- PL1001 to PL1072: Writing data to the FlashROM or EEPROM of a servo amplifier

For the parameters prefixed by an asterisk (*), setting becomes effective when the power is turned off once and back on after setting the parameter data.

○: Available

×: Not available

Virtual device name	Name	Symbol	MR-J4(W)-□B(-RJ)	MR-J4-GF(-RJ)	MR-JE-□B	MR-JE-□BF	MR-J5-G(-RJ), MR-J5W□-G	MR-JET-G	MR-J5D□-G	MR-J5-□B(-RJ)
PL1, PL1001	Linear servo motor/DD motor function selection 1	**LIT1	○	○	×	×	×	×	×	○
	Function selection L-1		×	×	×	×	○	×	○	○
PL2, PL1002	Linear encoder resolution - Numerator	**LIM	○	○	×	×	○	×	○	○
PL3, PL1003	Linear encoder resolution - Denominator	**LID	○	○	×	×	○	×	○	○
PL4, PL1004	Linear servo motor/DD motor function selection 2	*LIT2	○	○	×	×	×	×	×	○
	Function selection L-2		×	×	×	×	○	×	○	○
PL5, PL1005	Position deviation error detection level	LB1	○	○	×	×	○	×	○	○
PL6, PL1006	Speed deviation error detection level	LB2	○	○	×	×	○	×	○	○
PL7, PL1007	Torque/thrust deviation error detection level	LB3	○	○	×	×	×	×	×	○
	Torque deviation error detection level		×	×	×	×	○	×	○	○
PL8, PL1008	Linear servo motor/DD motor function selection 3	*LIT3	○	○	×	×	×	×	×	○
	Function selection L-3		×	×	×	×	○	×	○	○
PL9, PL1009	Magnetic pole detection voltage level	LPWM	○	○	×	×	○	×	○	○
PL10 to PL16, PL1010 to PL1016	For manufacturer setting	-	×	×	×	×	×	×	×	×
PL17, PL1017	Magnetic pole detection - Minute position detection method - Function selection	LTSTS	○	○	×	×	○	×	○	○
PL18, PL1018	Magnetic pole detection - Minute position detection method - Identification signal amplitude	IDLV	○	○	×	×	○	×	○	○
PL19 to PL72, PL1019 to PL1072	For manufacturer setting	-	×	×	×	×	×	×	×	×

■Network setting parameter ([MELSEC iQ-R, RnMT/NC/RT, CR800-D], [MELSEC iQ-R, RnMT/RT, CR800-D])

Use an appropriate device according to the write destination of the servo amplifier.

- PN1 to PN32: Writing data to the RAM of a servo amplifier
- PN1001 to PN1032: Writing data to the FlashROM or EEPROM of a servo amplifier

For the parameters prefixed by an asterisk (*), setting becomes effective when the power is turned off once and back on after setting the parameter data.

○: Available

×: Not available

Virtual device name	Name	Symbol	MR-J4(W)-□B(-RJ)	MR-J4-GF(-RJ)	MR-JE-□B	MR-JE-□BF	MR-J5-G(-RJ), MR-J5W□-G	MR-JET-G	MR-J5D□-G	MR-J5-□B(-RJ)
PN1, PN1001	For manufacturer setting	-	×	×	×	×	×	×	×	×
PN2, PN1002	Communication error detection time	CERT	×	○	×	×	○	○	○	×
PN3, PN1003	Communication mode setting for CC-Link IE communication	**NEMD	×	○	×	×	×	×	×	×
PN4, PN1004	CC-Link IE communication network number	**NENO	×	○	×	×	×	×	×	×
PN5, PN1005	Communication error detection frequency setting	CERI	×	○	×	×	○	○	○	×
PN6, PN1006	Function selection N-1	NOP1	×	○	×	×	×	×	×	×
PN7 to PN12, PN1007 to PN1012	For manufacturer setting	-	×	×	×	×	×	×	×	×
PN13, PN1013	Network protocol setup	NPS	×	×	×	×	×	×	○	×
PN14 to PN19, PN1014 to PN1019	For manufacturer setting	-	×	×	×	×	×	×	×	×
PN20, PN1020	Automatic parameter backup update interval	**PABI	×	×	×	×	○	○	○	×
PN21, PN1021	For manufacturer setting	-	×	×	×	×	×	×	×	×
PN22, PN1022	Function selection N-5	NOP5	×	×	×	×	×	×	○	×
PN23 to PN32, PN1023 to PN1032	For manufacturer setting	-	×	×	×	×	×	×	×	×

A

■Position extension parameter ([MELSEC iQ-R, RnMT/NC/RT, CR800-D], [MELSEC iQ-R, RnMT/RT, CR800-D])

Use an appropriate device according to the write destination of the servo amplifier.

- PVS1 to PVS32: Writing data to the RAM of a servo amplifier
- PVS1001 to PVS1032: Writing data to the FlashROM or EEPROM of a servo amplifier

For the parameters prefixed by an asterisk (*), setting becomes effective when the power is turned off once and back on after setting the parameter data.

○: Available

×: Not available

Virtual device name	Name	Symbol	MR-J4(W)-□B(-RJ)	MR-J4-GF(-RJ)	MR-JE-□B	MR-JE-□BF	MR-J5-G(-RJ), MR-J5W□-G	MR-JET-G	MR-J5D□-G	MR-J5-□B(-RJ)
PVS1, PVS1001	Profile speed command extension setting	PVC2	×	×	×	×	○	×	○	×
PVS2, PVS1002	For manufacturer setting	-	×	×	×	×	×	×	×	×
PVS3, PVS1003	Maximum profile speed extension setting	MPVCE	×	×	×	×	○	×	○	×
PVS4, PVS1004	For manufacturer setting	-	×	×	×	×	×	×	×	×
PVS5, PVS1005	Profile acceleration	PACC	×	×	×	×	○	×	○	×
PVS6, PVS1006	For manufacturer setting	-	×	×	×	×	×	×	×	×
PVS7, PVS1007	Profile deceleration	PDEC	×	×	×	×	○	×	○	×
PVS8, PVS1008	For manufacturer setting	-	×	×	×	×	×	×	×	×
PVS9, PVS1009	Forced stop deceleration	RSBDEC	×	×	×	×	○	○	○	×
PVS10, PVS1010	For manufacturer setting	-	×	×	×	×	×	×	×	×
PVS11, PVS1011	Home position return speed extension setting	ZRFE	×	×	×	×	○	○	○	×
PVS12, PVS1012	For manufacturer setting	-	×	×	×	×	×	×	×	×
PVS13, PVS1013	Creep speed extension setting	CRFE	×	×	×	×	○	○	○	×
PVS14, PVS1014	For manufacturer setting	-	×	×	×	×	×	×	×	×
PVS15, PVS1015	Home position return acceleration	HMACC	×	×	×	×	○	○	○	×
PVS16, PVS1016	For manufacturer setting	-	×	×	×	×	×	×	×	×
PVS17, PVS1017	Home position return deceleration	HMDEC	×	×	×	×	○	○	○	×
PVS18, PVS1018	For manufacturer setting	-	×	×	×	×	×	×	×	×
PVS19, PVS1019	Speed reached 2 output range extension setting	SA2RE	×	×	×	×	○	×	○	×
PVS20, PVS1020	Zero speed 2 level extension setting	ZSP2LE	×	×	×	×	○	×	○	×
PVS21, PVS1021	Speed limit extension setting	VLMTE	×	×	×	×	○	○	○	×
PVS22, PVS1022	For manufacturer setting	-	×	×	×	×	×	×	×	×
PVS23, PVS1023	Speed unit conversion electronic gear numerator	*VCMX	×	×	×	×	○	○	○	×

Virtual device name	Name	Symbol	MR-J4(W)-□B(-RJ)	MR-J4-GF(-RJ)	MR-JE-□B	MR-JE-□BF	MR-J5-G(-RJ), MR-J5W□-G	MR-JET-G	MR-J5D□-G	MR-J5-□B(-RJ)
PVS24, PVS1024	Speed unit conversion electronic gear denominator	*VCDV	×	×	×	×	○	○	○	×
PVS25, PVS1025	Acceleration unit conversion electronic gear nmrtr.	*ACMX	×	×	×	×	○	○	○	×
PVS26, PVS1026	Acceleration unit conversion electronic gear dnmntr.	*ACDV	×	×	×	×	○	○	○	×
PVS27 to PVS28, PVS1027 to PVS1028	For manufacturer setting	-	×	×	×	×	×	×	×	×
PVS29, PVS1029	Acceleration limit	ACCLMT	×	×	×	×	×	×	○	×
PVS30, PVS1030	For manufacturer setting	-	×	×	×	×	×	×	×	×
PVS31, PVS1031	Deceleration limit	DECLMT	×	×	×	×	×	×	○	×
PVSS32, PVS1032	For manufacturer setting	-	×	×	×	×	×	×	×	×

■Status display ([MELSEC iQ-R, RnMT/NC/RT, CR800-D], [MELSEC iQ-R, RnMT/RT, CR800-D])

○: Available

×: Not available

Virtual device name	Name	Symbol	MR-J4(W)-□B(-RJ)	MR-J4-GF(-RJ)	MR-JE-□B	MR-JE-□BF	MR-J5-G(-RJ), MR-J5W□-G	MR-JET-G	MR-J5D□-G	MR-J5-□B(-RJ)
ST0	Cumulative feedback pulses	-	○	○	×	×	○	○	○	○
ST1	Servo motor speed	-	○	○	×	×	○	○	○	○
ST2	Droop pulses	-	○	○	×	×	○	○	○	○
ST3	Cumulative command pulses	-	○	○	×	×	○	○	○	○
ST4	Command pulse frequency	-	○	○	×	×	○	○	○	○
ST5 and ST6	For manufacturer setting	-	×	×	×	×	×	×	×	×
ST7	Regenerative load ratio	-	○	○	×	×	○	○	○	○
ST8	Effective load ratio	-	○	○	×	×	○	○	○	○
ST9	Peak load ratio	-	○	○	×	×	○	○	○	○
ST10	Instantaneous torque	-	○	○	×	×	×	×	×	○
	Torque/Instantaneous torque		×	×	×	×	○	○	○	○
ST11	Within one-revolution position	-	○	○	×	×	○	○	○	○
ST12	ABS counter	-	○	○	×	×	○	○	○	○
ST13	Load inertia moment ratio	-	○	○	×	×	○	○	○	○
ST14	Bus voltage	-	○	○	×	×	○	○	○	○
ST15	Load-side cumulative feedback pulses	-	○	○	×	×	○	×	○	○
ST16	Load-side encoder droop pulses	-	×	○	×	×	○	×	○	○
ST17	Load-side encoder information 1	-	○	○	×	×	○	×	○	○
ST18	Load-side encoder information 2	-	○	○	×	×	○	×	○	○
ST19	Analog monitor output voltage 1	-	○	○	×	×	×	×	×	×
ST20	Analog monitor output voltage 2	-	○	○	×	×	×	×	×	×

A

Virtual device name	Name	Symbol	MR-J4(W)-□B(-RJ)	MR-J4-GF(-RJ)	MR-JE-□B	MR-JE-□BF	MR-J5-G(-RJ), MR-J5W□-G	MR-JET-G	MR-J5D□-G	MR-J5-□B(-RJ)
ST21	AB phase output pulse F/B integrated value	-	○	○	×	×	×	×	×	×
ST22	Temperature of servo motor thermistor	-	○	○	×	×	○	○	○	○
ST23	Servo motor-side cumulative feedback pulses (before gear)	-	○	○	×	×	×	×	×	×
	Cumulative feedback pulses (Motor unit)	-	×	×	×	×	○	○	○	○
ST24	Electrical angle	-	○	○	×	×	○	×	○	○
ST25 to ST29	For manufacturer setting	-	×	×	×	×	×	×	×	×
ST30	Motor/load side position difference	-	×	○	×	×	○	×	○	○
ST31	Motor/load side speed difference	-	×	○	×	×	○	×	○	○
ST32	Encoder inside temperature	-	○	○	×	×	○	○	○	○
ST33	Setting time	-	○	○	×	×	○	○	○	○
ST34	Oscillation detection frequency	-	○	○	×	×	○	○	○	○
ST35	Number of tough drive operations	-	○	○	×	×	○	○	○	○
ST36 to ST39	For manufacturer setting	-	×	×	×	×	×	×	×	×
ST40	Unit power consumption	-	○	○	×	×	○	○	○	○
ST41	Unit total power consumption	-	○	○	×	×	○	○	○	○
ST42	Position actual value	-	×	○	×	×	×	×	×	×
	Current position	-	×	×	×	×	○	○	○	×
ST43	Command position	-	×	○	×	×	○	○	○	×
ST44	Command remaining distance	-	×	○	×	×	×	×	×	×
	Remaining command distance	-	×	×	×	×	○	○	○	×
ST45	Point table No.	-	×	○	×	×	×	×	×	×
	Command number	-	×	×	×	×	○	○	○	×
ST46 to ST48	For manufacturer setting	-	×	×	×	×	×	×	×	×

■Extension setting No.2 parameter ([MELSEC iQ-R, RnMT/NC/RT, CR800-D], [MELSEC iQ-R, RnMT/RT, CR800-D])

Use an appropriate device according to the write destination of the servo amplifier.

- PE1 to PE88: Writing data to the RAM of a servo amplifier
- PE1001 to PE1088: Writing data to the FlashROM or EEPROM of a servo amplifier

For the parameters prefixed by an asterisk (*), setting becomes effective when the power is turned off once and back on after setting the parameter data.

○: Available

×: Not available

Virtual device name	Name	Symbol	MR-J4(W)-□B(-RJ)	MR-J4-GF(-RJ)	MR-JE-□B	MR-JE-□BF	MR-J5-G(-RJ), MR-J5W□-G	MR-JET-G	MR-J5D□-G	MR-J5-□B(-RJ)
PE1, PE1001	Fully closed loop function selection 1	**FCT1	○	○	×	×	○	×	○	○
PE2, PE1002	For manufacturer setting	-	×	×	×	×	×	×	×	×
PE3, PE1003	Fully closed loop function selection 2	*FCT2	○	○	×	×	○	×	○	○
PE4, PE1004	Fully closed loop control - Feedback pulse electronic gear 1 - Numerator	**FBN	○	○	×	×	○	×	○	○
PE5, PE1005	Fully closed loop control - Feedback pulse electronic gear 1 - Denominator	**FBD	○	○	×	×	○	×	○	○
PE6, PE1006	Fully closed loop control - Speed deviation error detection level	BC1	○	○	×	×	○	×	○	○
PE7, PE1007	Fully closed loop control - Position deviation error detection level	BC2	○	○	×	×	○	×	○	○
PE8, PE1008	Fully closed loop dual feedback filter	DUF	○	○	×	×	○	×	○	○
PE9, PE1009	For manufacturer setting	-	×	×	×	×	○	×	○	×
PE10, PE1010	Fully closed loop function selection 3	FCT3	○	○	×	×	○	×	○	○
PE11 to PE33, PE1011 to PE1033	For manufacturer setting	-	×	×	×	×	×	×	×	×
PE34, PE1034	Fully closed loop control - Feedback pulse electronic gear 2 - Numerator	**FBN2	○	○	×	×	×	×	×	×
PE35, PE1035	Fully closed loop control - Feedback pulse electronic gear 2 - Denominator	**FBD2	○	○	×	×	×	×	×	×
PE36 to PE40, PE1036 to PE1040	For manufacturer setting	-	×	×	×	×	×	×	×	×
PE41, PE1041	Function selection E-3	EOP3	○	○	○	○	○	○	○	○
PE42, PE43, PE1042, and PE1043	For manufacturer setting	-	×	×	×	×	×	×	×	×

A

Virtual device name	Name	Symbol	MR-J4(W)-□B(-RJ)	MR-J4-GF(-RJ)	MR-JE-□B	MR-JE-□BF	MR-J5-G(-RJ), MR-J5W□-G	MR-JET-G	MR-J5D□-G	MR-J5-□B(-RJ)
PE44, PE1044	Lost motion compensation positive-side compensation value selection	LMCP	○	○	○	○	○	○	○	○
PE45, PE1045	Lost motion compensation negative-side compensation value selection	LMCN	○	○	○	○	○	○	○	○
PE46, PE1046	Lost motion filter setting	LMFLT	○	○	○	○	○	○	○	○
PE47, PE1047	Torque offset	TOF	○	○	○	○	○	○	○	○
PE48, PE1048	Lost motion compensation function selection	*LMOP	○	○	○	○	○	○	○	○
PE49, PE1049	Lost motion compensation timing	LMCD	○	○	○	○	○	○	○	○
PE50, PE1050	Lost motion compensation non-sensitive band	LMCT	○	○	○	○	○	○	○	○
PE51, PE1051	Load-side encoder resolution setting	**EDV2	×	×	×	×	×	×	○	○
PE52, PE1052	For manufacturer setting	-	×	×	×	×	×	×	×	×
PE53, PE1053	Maximum torque limit 1	TLMX1	×	×	×	×	○	○	○	○
PE54 to PE64, PE1054 to PE1064	For manufacturer setting	-	×	×	×	×	×	×	×	×
PE65, PE1065	Collision detection friction torque	TRUB	×	×	×	×	×	×	×	○
PE66, PE1066	Collision detection viscosity friction torque	VFTQ	×	×	×	×	×	×	×	○
PE67, PE1067	Collision detection restoration torque	CLTQ	×	×	×	×	×	×	×	○
PE68, PE1068	Tandem control function selection	**TANC	×	×	×	×	×	×	×	○
PE69, PE1069	Tandem control function setting	*TCOP	×	×	×	×	×	×	×	○
PE70, PE1070	Interaxial torque deviation permissible level	TTRQ	×	×	×	×	×	×	×	○
PE71, PE1071	Interaxial speed deviation permissible level	TPOSI	×	×	×	×	×	×	×	○
PE72 to PE88, PE1072 to PE1088	For manufacturer setting	-	×	×	×	×	×	×	×	×

■Extension setting No.3 parameter ([MELSEC iQ-R, RnMT/NC/RT, CR800-D], [MELSEC iQ-R, RnMT/RT, CR800-D])

Use an appropriate device according to the write destination of the servo amplifier.

- PF1 to PF99: Writing data to the RAM of a servo amplifier
- PF1001 to PF1099: Writing data to the FlashROM or EEPROM of a servo amplifier

For the parameters prefixed by an asterisk (*), setting becomes effective when the power is turned off once and back on after setting the parameter data.

○: Available

×: Not available

Virtual device name	Name	Symbol	MR-J4(W)-□B(-RJ)	MR-J4-GF(-RJ)	MR-JE-□B	MR-JE-□BF	MR-J5-G(-RJ), MR-J5W□-G	MR-JET-G	MR-J5D□-G	MR-J5-□B(-RJ)
PF1, PF1001	For manufacturer setting	-	×	×	×	×	×	×	×	×
PF2, PF1002	Function selection F-2	*FOP2	○	×	×	×	○	○	○	○
PF3 to PF5, PF1003 to PF1005	For manufacturer setting	-	×	×	×	×	×	×	×	×
PF6, PF1006	Function selection F-5	*FOP5	○	○	○	○	○	○	○	○
PF7 to PF11, PF1007 to PF1011	For manufacturer setting	-	×	×	×	×	×	×	×	×
PF12, PF1012	Electronic dynamic brake operating time	DBT	○	○	○	○	○	○	○	○
PF13 to PF17, PF1013 to PF1017	For manufacturer setting	-	×	×	×	×	×	×	×	×
PF18, PF1018	STO diagnosis error detection time	**STOD	×	○	×	○	○	×	○	○
PF19, PF1019	Friction trouble prediction compen. coefficient 1	TSL	×	○	×	×	○	×	○	○
PF20, PF1020	Friction trouble prediction compen. coefficient 2	TIC	×	○	×	×	○	×	○	○
PF21, PF1021	Drive recorder switching time setting	DRT	○	○	○	○	○	○	○	○
PF22, PF1022	For manufacturer setting	-	×	×	×	×	×	×	×	×
PF23, PF1023	Vibration tough drive - Oscillation detection level	OSCL1	○	○	○	○	○	○	○	○
PF24, PF1024	Vibration tough drive function selection	*OSCL2	○	○	○	○	×	×	×	×
	Function selection F-9	*FOP9	×	×	×	×	○	○	○	○
PF25, PF1025	SEMI-F47 function - Instantaneous power failure detection time	CVAT	○	○	○	○	×	×	×	×
	SEMI-F47 Inst pwr.fail.det.t. (Inst pwr.fail.tuf.drv.)		×	×	×	×	○	○	○	○
PF26 to PF28, PF1026 to PF1028	For manufacturer setting	-	×	×	×	×	×	×	×	×
PF29, PF1029	Function selection F-10	*FOP10	×	×	×	×	×	×	○	○

A

Virtual device name	Name	Symbol	MR-J4(W)-□B(-RJ)	MR-J4-GF(-RJ)	MR-JE-□B	MR-JE-□BF	MR-J5-G(-RJ), MR-J5W□-G	MR-JET-G	MR-J5D□-G	MR-J5-□B(-RJ)
PF30, PF1030	For manufacturer setting	-	×	×	×	×	×	×	×	×
PF31, PF1031	Machine diagnosis function - Friction judgment speed	FRIC	○	○	○	○	○	○	○	○
PF32, PF1032	Oscillation detection alarm time	*VIBT	×	×	×	×	○	○	○	○
PF33, PF1033	For manufacturer setting	-	×	×	×	×	×	×	×	×
PF34, PF1034	Machine diagnosis function selection	*MFP	×	○	×	×	○	○	○	○
PF35 to PF39, PF1035 to PF1039	For manufacturer setting	-	×	×	×	×	×	×	×	×
PF40, PF1040	Machine trouble prediction parameter	MFPP	×	○	×	×	○	×	○	○
PF41, PF1041	Trouble prediction motor total move distance	FPMT	×	○	×	×	×	×	×	×
	Failure prediction - Servo motor total move distance		×	×	×	×	○	×	○	○
PF42, PF1042	Friction trouble prediction average characteristic	PAV	×	○	×	×	○	×	○	○
PF43, PF1043	Friction trouble prediction standard deviation	PSD	×	○	×	×	○	×	○	○
PF44, PF1044	For manufacturer setting	-	×	×	×	×	×	×	×	×
PF45, PF1045	Vibration trouble prediction average characteristic	VAV	×	○	×	×	○	×	○	○
PF46, PF1046	Vibration trouble prediction standard deviation	VSC	×	○	×	×	×	×	×	×
		VSD	×	×	×	×	○	×	○	○
PF47, PF1047	Servo motor total move distance offset	TMO	×	×	×	×	○	×	○	○
PF48 to PF65, PF1048 to PF1065	For manufacturer setting	-	×	×	×	×	×	×	×	×
PF66, PF1066	Gear ratio setting for backlash estimation	BLG	×	×	×	×	○	×	○	○
PF67, PF1067	Backlash nominal value	BLN	×	×	×	×	○	×	○	○
PF68, PF1068	Backlash threshold magnification	BLTT	×	×	×	×	○	×	○	○
PF69, PF1069	Static friction failure prediction avg. characteristic	SPAV2	×	×	×	×	○	×	○	○
PF70, PF1070	Static friction failure prediction standard deviation	SPSD2	×	×	×	×	○	×	○	○
PF71, PF1071	Belt failure prediction function selection	BFP	×	×	×	×	○	×	○	○
PF72, PF1072	Belt tension at installation	SBT	×	×	×	×	○	×	○	○
PF73, PF1073	Belt tension at extension	ABT	×	×	×	×	○	×	○	○
PF74, PF1074	Static friction at installation	SSF	×	×	×	×	○	×	○	○
PF75, PF1075	Static friction at extension	ASF	×	×	×	×	○	×	○	○

Virtual device name	Name	Symbol	MR-J4(W)-□B(-RJ)	MR-J4-GF(-RJ)	MR-JE-□B	MR-JE-□BF	MR-J5-G(-RJ), MR-J5W□-G	MR-JET-G	MR-J5D□-G	MR-J5-□B(-RJ)
PF76, PF1076	Belt tension error threshold	BTS	×	×	×	×	○	×	○	○
PF77 to PF78, PF1077 to PF1078	For manufacturer setting	-	×	×	×	×	×	×	×	×
PF79, PF1079	Event history setting	EVS	×	×	×	×	×	×	×	○
PF80, PF1080	Drive recorder Operation condition selection	DRMC	×	×	×	×	○	○	○	○
PF81, PF1081	Drive recorder Sampling operation selection	DRMS	×	×	×	×	○	○	○	○
PF82, PF1082	Drive recorder Trigger operation selection	DRTM	×	×	×	×	○	○	○	○
PF83, PF1083	Drive recorder Trigger operation axis common sel.	**DRTAX	×	×	×	×	○	×	○	○
PF84, PF1084	Drive recorder Trigger channel selection	DRTC	×	×	×	×	○	○	○	○
PF85, PF1085	Drive recorder Trigger level setting 1	DRTL1	×	×	×	×	○	○	○	○
PF86, PF1086	Drive recorder Trigger level setting 2	DRTL2	×	×	×	×	○	○	○	○
PF87, PF1087	Drive recorder Analog channel setting 1	DRAC1	×	×	×	×	○	○	○	○
PF88, PF1088	Drive recorder Analog channel setting 2	DRAC2	×	×	×	×	○	○	○	○
PF89, PF1089	Drive recorder Analog channel setting 3	DRAC3	×	×	×	×	○	○	○	○
PF90, PF1090	Drive recorder Analog channel setting 4	DRAC4	×	×	×	×	○	○	○	○
PF91, PF1091	Drive recorder Digital channel setting 1	DRDC1	×	×	×	×	○	○	○	○
PF92, PF1092	Drive recorder Digital channel setting 2	DRDC2	×	×	×	×	○	○	○	○
PF93, PF1093	Drive recorder Digital channel setting 3	DRDC3	×	×	×	×	○	○	○	○
PF94, PF1094	Drive recorder Digital channel setting 4	DRDC4	×	×	×	×	○	○	○	○
PF95, PF1095	Drive recorder History clear	**DRCLR	×	×	×	×	○	○	○	○
PF96 to PF99, PF1096 to PF1099	For manufacturer setting	-	×	×	×	×	×	×	×	×

■Network basic parameter ([MELSEC iQ-R, RnMT/NC/RT, CR800-D], [MELSEC iQ-R, RnMT/RT, CR800-D])

Set [Data Type] and [Format] as shown below for the objects for which this device is set.

- [Data Type]: [Unsigned BIN32]
- [Format]: [Hexadecimal]

○: Available

×: Not available

Virtual device name	Name	Symbol	MR-J4(W)-□B(-RJ)	MR-J4-GF(-RJ)	MR-JE-□B	MR-JE-□BF	MR-J5-G(-RJ), MR-J5W□-G	MR-JET-G	MR-J5D□-G	MR-J5-□B(-RJ)
NPA1	IP address setting	-	×	×	×	×	○	○	○	×
NPA2	IP address	-	×	×	×	×	○	○	○	×
NPA3	Use prohibited	-	×	×	×	×	×	×	×	×
NPA4	Subnet mask	-	×	×	×	×	○	○	○	×
NPA5	Use prohibited	-	×	×	×	×	×	×	×	×
NPA6	For manufacturer setting	-	×	×	×	×	×	×	×	×
NPA7	Use prohibited	-	×	×	×	×	×	×	×	×
NPA8	Host name	-	×	×	×	×	○	○	○	×
NPA9 to NPA11	For manufacturer setting	-	×	×	×	×	×	×	×	×
NPA12	Communication speed	-	×	×	×	×	×	×	○	×
NPA2001 to NPA2032	Host name expansion area	-	×	×	×	×	○	○	○	×

■Alarm ([MELSEC iQ-R, RnMT/NC/RT, CR800-D], [MELSEC iQ-R, RnMT/RT, CR800-D])

○: Available

×: Not available

Virtual device name	Name	Symbol	MR-J4(W)-□B(-RJ)	MR-J4-GF(-RJ)	MR-JE-□B	MR-JE-□BF	MR-J5-G(-RJ), MR-J5W□-G	MR-JET-G	MR-J5D□-G	MR-J5-□B(-RJ)
ALM0	Current alarm number	-	○	○	○	○	○	○	○	○
ALM1	Detailed data of current alarms	-	○	○	○	○	○	○	○	○
ALM2*1	Currently occurring alarm number and detail number	-	×	×	×	×	○	○	○	○
ALM11	Servo status(alarm) Cumulative feedback pulses	-	○	○	○	○	○	○	○	○
ALM12	Servo status(alarm) Servo motor speed	-	○	○	○	○	○	○	○	○
ALM13	Servo status(alarm) Droop pulses	-	○	○	○	○	○	○	○	○
ALM14	Servo status(alarm) Cumulative command pulses	-	○	○	○	○	○	○	○	○
ALM15	Servo status(alarm) Command pulse frequency	-	○	○	○	○	○	○	○	○
ALM16 and ALM17	For manufacturer setting	-	×	×	×	×	×	×	×	×
ALM18	Servo status(alarm) Regenerative load ratio	-	○	○	○	○	○	○	○	○
ALM19	Servo status(alarm) Effective load ratio	-	○	○	○	○	○	○	○	○
ALM20	Servo status(alarm) Peak load ratio	-	○	○	○	○	○	○	○	○
ALM21	Servo status(alarm) Instantaneous torque	-	○	○	○	○	×	×	×	×
	Servo status(alarm) Torque/ Instantaneous torque		×	×	×	×	○	○	○	○
ALM22	Servo status(alarm) Within one-revolution position	-	○	○	○	○	○	○	○	○
ALM23	Servo status(alarm) ABS counter	-	○	○	○	○	○	○	○	○
ALM24	Servo status(alarm) Load inertia moment ratio	-	○	○	○	○	○	○	○	○
ALM25	Servo status(alarm) Bus voltage	-	○	○	○	○	○	○	○	○
ALM26	Servo status(alarm) Load-side cumulative feedback pulses	-	○	○	○	○	○	×	○	○
ALM27	Servo status(alarm) Load-side droop pulses	-	×	○	×	×	○	×	○	○
ALM28	Servo status(alarm) Load-side encoder information 1	-	○	○	○	○	○	×	○	○
ALM29	Servo status(alarm) Load-side encoder information 2	-	○	○	○	○	○	×	○	○
ALM30	Servo status(alarm) Analog monitor output voltage 1	-	○	○	○	○	×	×	×	×
ALM31	Servo status(alarm) Analog monitor output voltage 2	-	○	○	○	○	×	×	×	×
ALM32	Servo status(alarm) AB phase output pulse F/B integrated value	-	○	○	○	○	×	×	×	×

A

Virtual device name	Name	Symbol	MR-J4(W)-□B(-RJ)	MR-J4-GF(-RJ)	MR-JE-□B	MR-JE-□BF	MR-J5-G(-RJ), MR-J5W□-G	MR-JET-G	MR-J5D□-G	MR-J5-□B(-RJ)
ALM33	Servo status(alarm) Temperature of servo motor thermistor	-	○	○	○	○	○	○	○	○
ALM34	Servo status(alarm) Servo motor-side cumulative feedback pulses (before gear)	-	○	○	○	○	×	×	×	×
	Servo status(alarm) Cumulative feedback pulses (Motor unit)		×	×	×	×	○	○	○	○
ALM35	Servo status(alarm) Electrical angle	-	○	○	○	○	○	×	○	○
ALM36 to ALM40	For manufacturer setting	-	×	×	×	×	×	×	×	×
ALM41	Servo status(alarm) Motor/ load side position difference	-	×	○	×	×	○	×	○	○
ALM42	Servo status(alarm) Motor/ load side speed difference	-	×	○	×	×	○	×	○	○
ALM43	Servo status(alarm) Internal temperature of encoder	-	○	×	○	○	×	×	×	×
	Servo status(alarm) Internal temperature of encoder	-	×	○	×	×	○	○	○	○
ALM44	Servo status(alarm) Setting time	-	○	×	○	○	×	×	×	×
	Servo status(alarm) Setting time	-	×	○	×	×	○	○	○	○
ALM45	Servo status(alarm) Oscillation detection frequency	-	○	×	○	○	×	×	×	×
	Servo status(alarm) Oscillation detection frequency	-	×	○	×	×	○	○	○	○
ALM46	Servo status(alarm) Number of tough drives	-	○	×	○	○	×	×	×	×
	Servo status(alarm) Number of tough drives	-	×	○	×	×	○	○	○	○
ALM47 to ALM50	For manufacturer setting	-	×	×	×	×	×	×	×	×
ALM51	Servo status(alarm) Unit power consumption	-	○	○	○	○	○	○	○	○
ALM52	Servo status(alarm) Unit total power consumption	-	○	○	○	○	○	○	○	○
ALM53	Servo status(alarm) Position actual value	-	×	○	×	×	×	×	×	×
	Servo status(alarm) Current position	-	×	×	×	×	○	○	○	×
ALM54	Servo status(alarm) Command position	-	×	○	×	×	○	○	○	×
ALM55	Servo status(alarm) Command remaining distance	-	×	○	×	×	×	×	×	×
	Servo status(alarm) Remaining command distance	-	×	×	×	×	○	○	○	×
ALM56	Servo status(alarm) Point table No.	-	×	○	×	×	×	×	×	×
	Servo status(alarm) Command number	-	×	×	×	×	○	○	○	×

Virtual device name	Name	Symbol	MR-J4(W)-□B(-RJ)	MR-J4-GF(-RJ)	MR-JE-□B	MR-JE-□BF	MR-J5-G(-RJ), MR-J5W□-G	MR-JET-G	MR-J5D□-G	MR-J5-□B(-RJ)
ALM57 to ALM59	For manufacturer setting	-	×	×	×	×	×	×	×	×
ALM200	Alarm number from Alarm History most recent alarm	-	○	○	○	○	○	○	○	○
ALM201	Alarm number from Alarm History 1st alarm in past	-	○	○	○	○	○	○	○	○
ALM202	Alarm number from Alarm History 2nd alarm in past	-	○	○	○	○	○	○	○	○
ALM203	Alarm number from Alarm History 3rd alarm in past	-	○	○	○	○	○	○	○	○
ALM204	Alarm number from Alarm History 4th alarm in past	-	○	○	○	○	○	○	○	○
ALM205	Alarm number from Alarm History 5th alarm in past	-	○	○	○	○	○	○	○	○
ALM206	Alarm number from Alarm History 6th alarm in past	-	○	○	○	○	○	○	○	○
ALM207	Alarm number from Alarm History 7th alarm in past	-	○	○	○	○	○	○	○	○
ALM208	Alarm number from Alarm History 8th alarm in past	-	○	○	○	○	○	○	○	○
ALM209	Alarm number from Alarm History 9th alarm in past	-	○	○	○	○	○	○	○	○
ALM210	Alarm number from Alarm History 10th alarm in past	-	○	○	○	○	○	○	○	○
ALM211	Alarm number from Alarm History 11th alarm in past	-	○	○	○	○	○	○	○	○
ALM212	Alarm number from Alarm History 12th alarm in past	-	○	○	○	○	○	○	○	○
ALM213	Alarm number from Alarm History 13th alarm in past	-	○	○	○	○	○	○	○	○
ALM214	Alarm number from Alarm History 14th alarm in past	-	○	○	○	○	○	○	○	○
ALM215	Alarm number from Alarm History 15th alarm in past	-	○	○	○	○	○	○	○	○
ALM220	Alarm occurrence time in alarm history most recent alarm	-	○	○	○	○	×	×	×	×
	Alarm occurrence time (cumulative power-on time) in alarm history: most recent alarm	-	×	×	×	×	○	○	○	○
ALM221	Alarm occurrence time in alarm history 1st alarm in past	-	○	○	○	○	×	×	×	×
	Alarm occurrence time (cumulative power-on time) in alarm history: 1st alarm in past	-	×	×	×	×	○	○	○	○
ALM222	Alarm occurrence time in alarm history 2nd alarm in past	-	○	○	○	○	×	×	×	×
	Alarm occurrence time (cumulative power-on time) in alarm history: 2nd alarm in past	-	×	×	×	×	○	○	○	○

A

Virtual device name	Name	Symbol	MR-J4(W)-□B(-RJ)	MR-J4-GF(-RJ)	MR-JE-□B	MR-JE-□BF	MR-J5-G(-RJ), MR-J5W□-G	MR-JET-G	MR-J5D□-G	MR-J5-□B(-RJ)
ALM223	Alarm occurrence time in alarm history 3rd alarm in past	-	○	○	○	○	×	×	×	×
	Alarm occurrence time (cumulative power-on time) in alarm history: 3rd alarm in past	-	×	×	×	×	○	○	○	○
ALM224	Alarm occurrence time in alarm history 4th alarm in past	-	○	○	○	○	×	×	×	×
	Alarm occurrence time (cumulative power-on time) in alarm history: 4th alarm in past	-	×	×	×	×	○	○	○	○
ALM225	Alarm occurrence time in alarm history 5th alarm in past	-	○	○	○	○	×	×	×	×
	Alarm occurrence time (cumulative power-on time) in alarm history: 5th alarm in past	-	×	×	×	×	○	○	○	○
ALM226	Alarm occurrence time in alarm history 6th alarm in past	-	○	○	○	○	×	×	×	×
	Alarm occurrence time (cumulative power-on time) in alarm history: 6th alarm in past	-	×	×	×	×	○	○	○	○
ALM227	Alarm occurrence time in alarm history 7th alarm in past	-	○	○	○	○	×	×	×	×
	Alarm occurrence time (cumulative power-on time) in alarm history: 7th alarm in past	-	×	×	×	×	○	○	○	○
ALM228	Alarm occurrence time in alarm history 8th alarm in past	-	○	○	○	○	×	×	×	×
	Alarm occurrence time (cumulative power-on time) in alarm history: 8th alarm in past	-	×	×	×	×	○	○	○	○
ALM229	Alarm occurrence time in alarm history 9th alarm in past	-	○	○	○	○	×	×	×	×
	Alarm occurrence time (cumulative power-on time) in alarm history: 9th alarm in past	-	×	×	×	×	○	○	○	○
ALM230	Alarm occurrence time in alarm history 10th alarm in past	-	○	○	○	○	×	×	×	×
	Alarm occurrence time (cumulative power-on time) in alarm history: 10th alarm in past	-	×	×	×	×	○	○	○	○

Virtual device name	Name	Symbol	MR-J4(W)-□B(-RJ)	MR-J4-GF(-RJ)	MR-JE-□B	MR-JE-□BF	MR-J5-G(-RJ), MR-J5W□-G	MR-JET-G	MR-J5D□-G	MR-J5-□B(-RJ)
ALM231	Alarm occurrence time in alarm history 11th alarm in past	-	○	○	○	○	×	×	×	×
	Alarm occurrence time (cumulative power-on time) in alarm history: 11th alarm in past	-	×	×	×	×	○	○	○	○
ALM232	Alarm occurrence time in alarm history 12th alarm in past	-	○	○	○	○	×	×	×	×
	Alarm occurrence time (cumulative power-on time) in alarm history: 12th alarm in past	-	×	×	×	×	○	○	○	○
ALM233	Alarm occurrence time in alarm history 13th alarm in past	-	○	○	○	○	×	×	×	×
	Alarm occurrence time (cumulative power-on time) in alarm history: 13th alarm in past	-	×	×	×	×	○	○	○	○
ALM234	Alarm occurrence time in alarm history 14th alarm in past	-	○	○	○	○	×	×	×	×
	Alarm occurrence time (cumulative power-on time) in alarm history: 14th alarm in past	-	×	×	×	×	○	○	○	○
ALM235	Alarm occurrence time in alarm history 15th alarm in past	-	○	○	○	○	×	×	×	×
	Alarm occurrence time (cumulative power-on time) in alarm history: 15th alarm in past	-	×	×	×	×	○	○	○	○
ALM240	Detailed alarm from Alarm History most recent alarm	-	○	○	○	○	×	×	×	×
	Alarm detail number in alarm history: most recent alarm	-	×	×	×	×	○	○	○	○
ALM241	Detailed alarm from Alarm History 1st alarm in past	-	○	○	○	○	×	×	×	×
	Alarm detail number in alarm history: 1st alarm in past	-	×	×	×	×	○	○	○	○
ALM242	Detailed alarm from Alarm History 2nd alarm in past	-	○	○	○	○	×	×	×	×
	Alarm detail number in alarm history: 2nd alarm in past	-	×	×	×	×	○	○	○	○
ALM243	Detailed alarm from Alarm History 3rd alarm in past	-	○	○	○	○	×	×	×	×
	Alarm detail number in alarm history: 3rd alarm in past	-	×	×	×	×	○	○	○	○
ALM244	Detailed alarm from Alarm History 4th alarm in past	-	○	○	○	○	×	×	×	×
	Alarm detail number in alarm history: 4th alarm in past	-	×	×	×	×	○	○	○	○
ALM245	Detailed alarm from Alarm History 5th alarm in past	-	○	○	○	○	×	×	×	×
	Alarm detail number in alarm history: 5th alarm in past	-	×	×	×	×	○	○	○	○

A

Virtual device name	Name	Symbol	MR-J4(W)-□B(-RJ)	MR-J4-GF(-RJ)	MR-JE-□B	MR-JE-□BF	MR-J5-G(-RJ), MR-J5W□-G	MR-JET-G	MR-J5D□-G	MR-J5-□B(-RJ)
ALM246	Detailed alarm from Alarm History 6th alarm in past	-	○	○	○	○	×	×	×	×
	Alarm detail number in alarm history: 6th alarm in past	-	×	×	×	×	○	○	○	○
ALM247	Detailed alarm from Alarm History 7th alarm in past	-	○	○	○	○	×	×	×	×
	Alarm detail number in alarm history: 7th alarm in past	-	×	×	×	×	○	○	○	○
ALM248	Detailed alarm from Alarm History 8th alarm in past	-	○	○	○	○	×	×	×	×
	Alarm detail number in alarm history: 8th alarm in past	-	×	×	×	×	○	○	○	○
ALM249	Detailed alarm from Alarm History 9th alarm in past	-	○	○	○	○	×	×	×	×
	Alarm detail number in alarm history: 9th alarm in past	-	×	×	×	×	○	○	○	○
ALM250	Detailed alarm from Alarm History 10th alarm in past	-	○	○	○	○	×	×	×	×
	Alarm detail number in alarm history: 10th alarm in past	-	×	×	×	×	○	○	○	○
ALM251	Detailed alarm from Alarm History 11th alarm in past	-	○	○	○	○	×	×	×	×
	Alarm detail number in alarm history: 11th alarm in past	-	×	×	×	×	○	○	○	○
ALM252	Detailed alarm from Alarm History 12th alarm in past	-	○	○	○	○	×	×	×	×
	Alarm detail number in alarm history: 12th alarm in past	-	×	×	×	×	○	○	○	○
ALM253	Detailed alarm from Alarm History 13th alarm in past	-	○	○	○	○	×	×	×	×
	Alarm detail number in alarm history: 13th alarm in past	-	×	×	×	×	○	○	○	○
ALM254	Detailed alarm from Alarm History 14th alarm in past	-	○	○	○	○	×	×	×	×
	Alarm detail number in alarm history: 14th alarm in past	-	×	×	×	×	○	○	○	○
ALM255	Detailed alarm from Alarm History 15th alarm in past	-	○	○	○	○	×	×	×	×
	Alarm detail number in alarm history: 15th alarm in past	-	×	×	×	×	○	○	○	○
ALM260	Alarm occurrence time (year, month) in alarm history: most recent alarm	-	×	×	×	×	○	○	○	○
ALM261	Alarm occurrence time (year, month) in alarm history: 1st alarm in past	-	×	×	×	×	○	○	○	○
ALM262	Alarm occurrence time (year, month) in alarm history: 2nd alarm in past	-	×	×	×	×	○	○	○	○
ALM263	Alarm occurrence time (year, month) in alarm history: 3rd alarm in past	-	×	×	×	×	○	○	○	○
ALM264	Alarm occurrence time (year, month) in alarm history: 4th alarm in past	-	×	×	×	×	○	○	○	○
ALM265	Alarm occurrence time (year, month) in alarm history: 5th alarm in past	-	×	×	×	×	○	○	○	○

Virtual device name	Name	Symbol	MR-J4(W)-□B(-RJ)	MR-J4-GF(-RJ)	MR-JE-□B	MR-JE-□BF	MR-J5-G(-RJ), MR-J5W□-G	MR-JET-G	MR-J5D□-G	MR-J5-□B(-RJ)
ALM266	Alarm occurrence time (year, month) in alarm history: 6th alarm in past	-	×	×	×	×	○	○	○	○
ALM267	Alarm occurrence time (year, month) in alarm history: 7th alarm in past	-	×	×	×	×	○	○	○	○
ALM268	Alarm occurrence time (year, month) in alarm history: 8th alarm in past	-	×	×	×	×	○	○	○	○
ALM269	Alarm occurrence time (year, month) in alarm history: 9th alarm in past	-	×	×	×	×	○	○	○	○
ALM270	Alarm occurrence time (year, month) in alarm history: 10th alarm in past	-	×	×	×	×	○	○	○	○
ALM271	Alarm occurrence time (year, month) in alarm history: 11th alarm in past	-	×	×	×	×	○	○	○	○
ALM272	Alarm occurrence time (year, month) in alarm history: 12th alarm in past	-	×	×	×	×	○	○	○	○
ALM273	Alarm occurrence time (year, month) in alarm history: 13th alarm in past	-	×	×	×	×	○	○	○	○
ALM274	Alarm occurrence time (year, month) in alarm history: 14th alarm in past	-	×	×	×	×	○	○	○	○
ALM275	Alarm occurrence time (year, month) in alarm history: 15th alarm in past	-	×	×	×	×	○	○	○	○
ALM280	Alarm occurrence time (date, hour) in alarm history: most recent alarm	-	×	×	×	×	○	○	○	○
ALM281	Alarm occurrence time (date, hour) in alarm history: 1st alarm in past	-	×	×	×	×	○	○	○	○
ALM282	Alarm occurrence time (date, hour) in alarm history: 2nd alarm in past	-	×	×	×	×	○	○	○	○
ALM283	Alarm occurrence time (date, hour) in alarm history: 3rd alarm in past	-	×	×	×	×	○	○	○	○
ALM284	Alarm occurrence time (date, hour) in alarm history: 4th alarm in past	-	×	×	×	×	○	○	○	○
ALM285	Alarm occurrence time (date, hour) in alarm history: 5th alarm in past	-	×	×	×	×	○	○	○	○
ALM286	Alarm occurrence time (date, hour) in alarm history: 6th alarm in past	-	×	×	×	×	○	○	○	○
ALM287	Alarm occurrence time (date, hour) in alarm history: 7th alarm in past	-	×	×	×	×	○	○	○	○
ALM288	Alarm occurrence time (date, hour) in alarm history: 8th alarm in past	-	×	×	×	×	○	○	○	○
ALM289	Alarm occurrence time (date, hour) in alarm history: 9th alarm in past	-	×	×	×	×	○	○	○	○

A

Virtual device name	Name	Symbol	MR-J4(W)-□B(-RJ)	MR-J4-GF(-RJ)	MR-JE-□B	MR-JE-□BF	MR-J5-G(-RJ), MR-J5W□-G	MR-JET-G	MR-J5D□-G	MR-J5-□B(-RJ)
ALM290	Alarm occurrence time (date, hour) in alarm history: 10th alarm in past	-	×	×	×	×	○	○	○	○
ALM291	Alarm occurrence time (date, hour) in alarm history: 11th alarm in past	-	×	×	×	×	○	○	○	○
ALM292	Alarm occurrence time (date, hour) in alarm history: 12th alarm in past	-	×	×	×	×	○	○	○	○
ALM293	Alarm occurrence time (date, hour) in alarm history: 13th alarm in past	-	×	×	×	×	○	○	○	○
ALM294	Alarm occurrence time (date, hour) in alarm history: 14th alarm in past	-	×	×	×	×	○	○	○	○
ALM295	Alarm occurrence time (date, hour) in alarm history: 15th alarm in past	-	×	×	×	×	○	○	○	○
ALM300	Alarm occurrence time (minute, second) in alarm history: most recent alarm	-	×	×	×	×	○	○	○	○
ALM301	Alarm occurrence time (minute, second) in alarm history: 1st alarm in past	-	×	×	×	×	○	○	○	○
ALM302	Alarm occurrence time (minute, second) in alarm history: 2nd alarm in past	-	×	×	×	×	○	○	○	○
ALM303	Alarm occurrence time (minute, second) in alarm history: 3rd alarm in past	-	×	×	×	×	○	○	○	○
ALM304	Alarm occurrence time (minute, second) in alarm history: 4th alarm in past	-	×	×	×	×	○	○	○	○
ALM305	Alarm occurrence time (minute, second) in alarm history: 5th alarm in past	-	×	×	×	×	○	○	○	○
ALM306	Alarm occurrence time (minute, second) in alarm history: 6th alarm in past	-	×	×	×	×	○	○	○	○
ALM307	Alarm occurrence time (minute, second) in alarm history: 7th alarm in past	-	×	×	×	×	○	○	○	○
ALM308	Alarm occurrence time (minute, second) in alarm history: 8th alarm in past	-	×	×	×	×	○	○	○	○
ALM309	Alarm occurrence time (minute, second) in alarm history: 9th alarm in past	-	×	×	×	×	○	○	○	○
ALM310	Alarm occurrence time (minute, second) in alarm history: 10th alarm in past	-	×	×	×	×	○	○	○	○
ALM311	Alarm occurrence time (minute, second) in alarm history: 11th alarm in past	-	×	×	×	×	○	○	○	○
ALM312	Alarm occurrence time (minute, second) in alarm history: 12th alarm in past	-	×	×	×	×	○	○	○	○
ALM313	Alarm occurrence time (minute, second) in alarm history: 13th alarm in past	-	×	×	×	×	○	○	○	○

Virtual device name	Name	Symbol	MR-J4(W)-□B(-RJ)	MR-J4-GF(-RJ)	MR-JE-□B	MR-JE-□BF	MR-J5-G(-RJ), MR-J5W□-G	MR-JET-G	MR-J5D□-G	MR-J5-□B(-RJ)
ALM314	Alarm occurrence time (minute, second) in alarm history: 14th alarm in past	-	×	×	×	×	○	○	○	○
ALM315	Alarm occurrence time (minute, second) in alarm history: 15th alarm in past	-	×	×	×	×	○	○	○	○

*1 Set [Data Type] and [Format] as shown below for the objects for which this device is set.
[Data Type]: [Unsigned BIN32]
[Format]: [Hexadecimal]

A

■Specifications of ALM260 to ALM275, ALM280 to ALM295, and ALM300 to ALM315 ([MELSEC iQ-R, RnMT/NC/RT, CR800-D], [MELSEC iQ-R, RnMT/RT, CR800-D])

The date and time of alarm occurrence are stored in BCD code in the upper eight bits and lower eight bits of each device.

The time zone setting of the controller is applied to the date and time to be acquired.

Example) When the date and time of the most recent alarm occurrence is 15:30:20 May 15, 2020

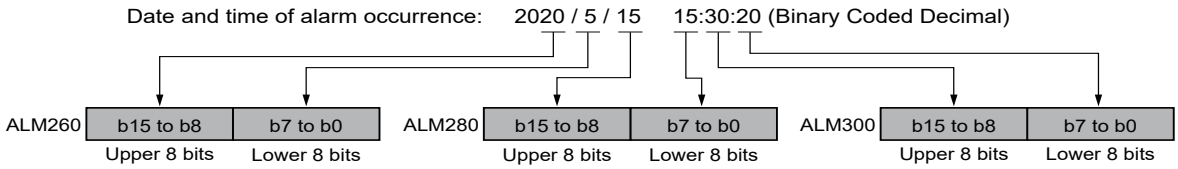

In either of the following cases, 0 is stored.

- When the date and time of alarm occurrence are those of 1999 or earlier
- When the controller is MR-J5(W)-B(-RJ)

■Point table (position) ([MELSEC iQ-R, RnMT/NC/RT, CR800-D], [MELSEC iQ-R, RnMT/RT, CR800-D])

Use an appropriate device according to the write destination of the servo amplifier.

- POS1 to POS255: Writing data to the RAM of a servo amplifier
- POS1001 to POS1255: Writing data to the FlashROM or EEPROM of a servo amplifier

○: Available

×: Not available

Virtual device name	Name	Symbol	MR-J4(W)-□B(-RJ)	MR-J4-GF(-RJ)	MR-JE-□B	MR-JE-□BF	MR-J5-G(-RJ), MR-J5W□-G	MR-JET-G	MR-J5D□-G	MR-J5-□B(-RJ)
POS1 to POS255, POS1001 to POS1255	Point table/position data No. 1 to No. 255	-	×	○	×	×	○	○	○	×

■Point table (speed) ([MELSEC iQ-R, RnMT/NC/RT, CR800-D], [MELSEC iQ-R, RnMT/RT, CR800-D])

Use an appropriate device according to the write destination of the servo amplifier.

- SPD1 to SPD255: Writing data to the RAM of a servo amplifier
- SPD1001 to SPD1255: Writing data to the FlashROM or EEPROM of a servo amplifier

○: Available

×: Not available

Virtual device name	Name	Symbol	MR-J4(W)-□B(-RJ)	MR-J4-GF(-RJ)	MR-JE-□B	MR-JE-□BF	MR-J5-G(-RJ), MR-J5W□-G	MR-JET-G	MR-J5D□-G	MR-J5-□B(-RJ)
SPD1 to SPD255, SPD1001 to SPD1255	Point table/speed data No. 1 to No. 255	-	×	○	×	×	○	○	○	×

■Point table (acceleration time constant) ([MELSEC iQ-R, RnMT/NC/RT, CR800-D], [MELSEC iQ-R, RnMT/RT, CR800-D])

Use an appropriate device according to the write destination of the servo amplifier.

- ACT1 to ACT255: Writing data to the RAM of a servo amplifier
- ACT1001 to ACT1255: Writing data to the FlashROM or EEPROM of a servo amplifier

○: Available

×: Not available

Virtual device name	Name	Symbol	MR-J4(W)-□B(-RJ)	MR-J4-GF(-RJ)	MR-JE-□B	MR-JE-□BF	MR-J5-G(-RJ), MR-J5W□-G	MR-JET-G	MR-J5D□-G	MR-J5-□B(-RJ)
ACT1 to ACT255, ACT1001 to ACT1255	Point table/acceleration time constant No. 1 to No. 255	-	×	○	×	×	○	○	○	×

■Point table (deceleration time constant) ([MELSEC iQ-R, RnMT/NC/RT, CR800-D], [MELSEC iQ-R, RnMT/RT, CR800-D])

Use an appropriate device according to the write destination of the servo amplifier.

- DCT1 to DCT255: Writing data to the RAM of a servo amplifier
- DCT1001 to DCT1255: Writing data to the FlashROM or EEPROM of a servo amplifier

○: Available

×: Not available

Virtual device name	Name	Symbol	MR-J4(W)-□B(-RJ)	MR-J4-GF(-RJ)	MR-JE-□B	MR-JE-□BF	MR-J5-G(-RJ), MR-J5W□-G	MR-JET-G	MR-J5D□-G	MR-J5-□B(-RJ)
DCT1 to DCT255, DCT1001 to DCT1255	Point table/deceleration time constant No. 1 to No. 255	-	×	○	×	×	○	○	○	×

■Point table (dwell) ([MELSEC iQ-R, RnMT/NC/RT, CR800-D], [MELSEC iQ-R, RnMT/RT, CR800-D])

Use an appropriate device according to the write destination of the servo amplifier.

- DWL1 to DWL255: Writing data to the RAM of a servo amplifier
- DWL1001 to DWL1255: Writing data to the FlashROM or EEPROM of a servo amplifier

○: Available

×: Not available

Virtual device name	Name	Symbol	MR-J4(W)-□B(-RJ)	MR-J4-GF(-RJ)	MR-JE-□B	MR-JE-□BF	MR-J5-G(-RJ), MR-J5W□-G	MR-JET-G	MR-J5D□-G	MR-J5-□B(-RJ)
DWL1 to DWL255, DWL1001 to DWL1255	Point table/dwell No. 1 to No. 255	-	×	○	×	×	○	○	○	×

■Point table (auxiliary function) ([MELSEC iQ-R, RnMT/NC/RT, CR800-D], [MELSEC iQ-R, RnMT/RT, CR800-D])

Use an appropriate device according to the write destination of the servo amplifier.

- AUX1 to AUX255: Writing data to the RAM of a servo amplifier
- AUX1001 to AUX1255: Writing data to the FlashROM or EEPROM of a servo amplifier

○: Available

×: Not available

Virtual device name	Name	Symbol	MR-J4(W)-□B(-RJ)	MR-J4-GF(-RJ)	MR-JE-□B	MR-JE-□BF	MR-J5-G(-RJ), MR-J5W□-G	MR-JET-G	MR-J5D□-G	MR-J5-□B(-RJ)
AUX1 to AUX255, AUX1001 to AUX1255	Point table/auxiliary function No. 1 to No. 255	-	×	○	×	×	○	○	○	×

■Point table (M code) ([MELSEC iQ-R, RnMT/NC/RT, CR800-D], [MELSEC iQ-R, RnMT/RT, CR800-D])

Use an appropriate device according to the write destination of the servo amplifier.

- MCD1 to MCD255: Writing data to the RAM of a servo amplifier
- MCD1001 to MCD1255: Writing data to the FlashROM or EEPROM of a servo amplifier

○: Available

×: Not available

Virtual device name	Name	Symbol	MR-J4(W)-□B(-RJ)	MR-J4-GF(-RJ)	MR-JE-□B	MR-JE-□BF	MR-J5-G(-RJ), MR-J5W□-G	MR-JET-G	MR-J5D□-G	MR-J5-□B(-RJ)
MCD1 to MCD255, MCD1001 to MCD1255	Point table/M code No. 1 to No. 255	-	×	×	×	×	○	○	○	×

■Machine diagnosis data ([MELSEC iQ-R, RnMT/NC/RT, CR800-D], [MELSEC iQ-R, RnMT/RT, CR800-D])

○: Available

×: Not available

Virtual device name	Name	Symbol	MR-J4(W)-□B(-RJ)	MR-J4-GF(-RJ)	MR-JE-□B	MR-JE-□BF	MR-J5-G(-RJ), MR-J5W□-G	MR-JET-G	MR-J5D□-G	MR-J5-□B(-RJ)
MD0	Machine diagnosis data, station number	-	○	○	○	○	○	○	○	○
MD1	Machine diagnosis data shift judgment(test mode)	-	○	○	○	○	○	○	○	○
MD2*1	Machine diagnosis data status	-	○	○	○	○	○	○	○	○
MD3*2	Machine diagnosis data coulomb friction torque in positive direction	-	○	○	○	○	○	○	○	○
MD4*2	Machine diagnosis data friction torque at rated speed in positive direction	-	○	○	○	○	○	○	○	○
MD5*2	Machine diagnosis data coulomb friction torque in negative direction	-	○	○	○	○	○	○	○	○
MD6*2	Machine diagnosis data friction torque at rated speed in negative direction	-	○	○	○	○	○	○	○	○
MD7*2	Machine diagnosis data oscillation frequency(motor is stopped)	-	○	○	○	○	○	○	○	○
MD8*2	Machine diagnosis data vibration level(motor is stopped)	-	○	○	○	○	○	○	○	○
MD9*2	Machine diagnosis data oscillation frequency(motor is operating)	-	○	○	○	○	○	○	○	○
MD10*2	Machine diagnosis data vibration level(motor is operating)	-	○	○	○	○	○	○	○	○
MD11	Machine diagnosis data, rated speed at forward or reverse rotation torque	-	×	○	×	×	○	○	○	○
MD12	Machine diagnosis data friction based fault prediction prepare status	-	×	○	×	×	×	×	×	×
	Machine diagnosis data: friction failure prediction - threshold creation progress		×	×	×	×	○	○*3	○	○
MD13	Machine diagnosis data vibration based fault prediction prepare status	-	×	○	×	×	×	×	×	×
	Machine diagnosis data: vibration failure prediction - threshold creation progress		×	×	×	×	○	○*3	○	○
MD14	Machine diagnosis data motor total move distance	-	×	○	×	×	○	○*3	○	○
MD15	Machine diagnosis data, friction failure prediction, upper threshold at forward rotation torque, lower threshold at reverse rotation torque	-	×	○	×	×	○	○*3	○	○

A

Virtual device name	Name	Symbol	MR-J4(W)-□B(-RJ)	MR-J4-GF(-RJ)	MR-JE-□B	MR-JE-□BF	MR-J5-G(-RJ), MR-J5W□-G	MR-JET-G	MR-J5D□-G	MR-J5-□B(-RJ)
MD16	Machine diagnosis data, friction failure prediction, lower threshold at forward rotation torque, upper threshold at reverse rotation torque	-	×	○	×	×	○	○*3	○	○
MD17	Machine diagnosis data vibration level threshold	-	×	○	×	×	×	×	×	×
	Machine diagnosis data: vibration failure prediction - threshold acquisition		×	×	×	×	○	○*3	○	○
MD18	Machine diagnosis data trouble prediction status	-	×	○	×	×	○	○*3	○	○
MD19	Machine diagnosis data: Belt tension estimation value	-	×	×	×	×	○	○*3	○	○
MD20	Machine diagnosis data: static friction used in failure prediction	-	×	×	×	×	○	○*3	○	○
MD21	Machine diagnosis data: Belt tension threshold estimation	-	×	×	×	×	○	○*3	○	○

*1 While the servo amplifier is estimating the corresponding machine status in the machine diagnosis, do not write data to the parameters of the servo amplifier from another GOT.
Doing so may cause the servo amplifier to malfunction.

*2 When MD2 indicates that the servo amplifier does not complete the machine diagnosis (is estimating or warning of the machine status), do not monitor MD3 to MD6 (friction states) and MD7 to MD10 (vibration/oscillation states).
To start monitoring those devices upon the estimation completion, set [Trigger] in the applicable object settings.

*3 The commands assigned to MD12 to MD21 are not supported by MR-JET-G.
When the commands are used, the read values will be indefinite.

■Gear failure diagnosis data ([MELSEC iQ-R, RnMT/NC/RT, CR800-D], [MELSEC iQ-R, RnMT/RT, CR800-D])

○: Available

×: Not available

Virtual device name	Name	Symbol	MR-J4(W)-□B(-RJ)	MR-J4-GF(-RJ)	MR-JE-□B	MR-JE-□BF	MR-J5-G(-RJ), MR-J5W□-G	MR-JET-G	MR-J5D□-G	MR-J5-□B(-RJ)
GFDS0	Backlash estimation (threshold)	-	×	×	×	×	○	×	○	○
GFDS1	Backlash estimation (estimation value)	-	×	×	×	×	○	×	○	○
GFDS2	Backlash estimation (estimation progress)	-	×	×	×	×	○	×	○	○
GFDS3	Backlash estimation (status)	-	×	×	×	×	○	×	○	○
GFDS4	Backlash error number	-	×	×	×	×	○	×	○	○
GFDS5	Backlash estimation move distance	-	×	×	×	×	○	×	○	○

■Encoder communication circuit diagnosis data ([MELSEC iQ-R, RnMT/NC/RT, CR800-D], [MELSEC iQ-R, RnMT/RT, CR800-D])

○: Available

×: Not available

Virtual device name	Name	Symbol	MR-J4(W)-□B(-RJ)	MR-J4-GF(-RJ)	MR-JE-□B	MR-JE-□BF	MR-J5-G(-RJ), MR-J5W□-G	MR-JET-G	MR-J5D□-G	MR-J5-□B(-RJ)
ECCDS0	CN2 encoder communication circuit diagnosis possibility	-	×	×	×	×	○	○	○	○
ECCDS1	CN2L encoder communication circuit diagnosis possibility	-	×	×	×	×	○	○	○	○
ECCDS2	CN2 encoder communication circuit diagnosis status	-	×	×	×	×	○	○	○	○
ECCDS3	CN2L encoder communication circuit diagnosis status	-	×	×	×	×	○	○	○	○
ECCDS4	CN2 encoder communication circuit diagnosis result	-	×	×	×	×	○	○	○	○
ECCDS5	CN2L encoder communication circuit diagnosis result	-	×	×	×	×	○	○	○	○

■One-touch tuning data ([MELSEC iQ-R, RnMT/NC/RT, CR800-D], [MELSEC iQ-R, RnMT/RT, CR800-D])

○: Available

×: Not available

Virtual device name	Name	Symbol	MR-J4(W)-□B(-RJ)	MR-J4-GF(-RJ)	MR-JE-□B	MR-JE-□BF	MR-J5-G(-RJ), MR-J5W□-G	MR-JET-G	MR-J5D□-G	MR-J5-□B(-RJ)
OTS0	One-touch tuning status confirmation	-	○	○	○	○	○	○	○	○
OTS1	Error code list	-	○	○	○	○	○	○	○	○
OTS2	Setting time	-	○	○	○	○	○	○	○	○
OTS3	Overshoot amount	-	○	○	○	○	○	○	○	○
OTS4	One-touch tuning command mode	-	×	×	×	×	○	○	○	○
OTS5	Load inertia moment ratio	-	×	×	×	×	○	○	○	○
OTS3000 *1	Read/write permissible move distance	-	×	×	×	×	○	○	○	○

*1 Writing is not available when a negative value is set for the device value.

A

■External input signal in MR-J5-G(-RJ) and MR-J5W□-G ([MELSEC iQ-R, RnMT/NC/RT, CR800-D], [MELSEC iQ-R, RnMT/RT, CR800-D])

Virtual device name	Name	Symbol	Data to be read from the servo amplifier
DI0	Input device statuses	-	The input device statuses corresponding to the setting values 0000 to 001F of the following are read. Pr. PF91_Drive recorder - Digital channel setting 1 (DRDC1)
DI1	Input device statuses	-	The input device statuses corresponding to the setting values 0020 to 003F of the following are read. Pr. PF91_Drive recorder - Digital channel setting 1 (DRDC1)
DI2	Input device statuses	-	The input device statuses corresponding to the setting values 0040 to 005F of the following are read. Pr. PF91_Drive recorder - Digital channel setting 1 (DRDC1)
DI3	External input pin statuses	-	The statuses of the listed input devices are assigned to the bits in order from bit 0 and read. For details on the input devices, refer to the following. 📖MR-J5 User's Manual (Hardware)
DI4	Statuses of input devices switched on through communication	-	The input device statuses switched on through communications (corresponding to the setting values 0000 to 001F) are read. Pr. PF91_Drive recorder - Digital channel setting 1 (DRDC1)
DI5	Statuses of input devices switched on through communication	-	The statuses of the input devices switched on through communication (input device statuses corresponding to the setting values 0020 to 003F of the following) are read. Pr. PF91_Drive recorder - Digital channel setting 1 (DRDC1)
DI6	Statuses of input devices switched on through communication	-	The statuses of the input devices switched on through communication (input device statuses corresponding to the setting values 0040 to 005F of the following) are read. Pr. PF91_Drive recorder - Digital channel setting 1 (DRDC1)

■External input signal in MR-J5D□-G ([MELSEC iQ-R, RnMT/NC/RT, CR800-D], [MELSEC iQ-R, RnMT/RT, CR800-D])

Virtual device name	Name	Symbol	Data to be read from the servo amplifier
DI0	Input device statuses	-	The input device statuses corresponding to the setting values 0000 to 001F of the following are read. Pr. PF91_Drive recorder - Digital channel setting 1 (DRDC1)
DI1	Input device statuses	-	The input device statuses corresponding to the setting values 0020 to 003F of the following are read. Pr. PF91_Drive recorder - Digital channel setting 1 (DRDC1)
DI2	Input device statuses	-	The input device statuses corresponding to the setting values 0040 to 005F of the following are read. Pr. PF91_Drive recorder - Digital channel setting 1 (DRDC1)
DI3	External input pin statuses	-	The statuses of the listed input devices are assigned to the bits in order from bit 0 and read. For details on the input devices, refer to the following. 📖MR-J5 User's Manual (Hardware)
DI4	Statuses of input devices switched on through communication	-	The input device statuses switched on through communications (corresponding to the setting values 0000 to 001F) are read. Pr. PF91_Drive recorder - Digital channel setting 1 (DRDC1)
DI5	Statuses of input devices switched on through communication	-	The statuses of the input devices switched on through communication (input device statuses corresponding to the setting values 0020 to 003F of the following) are read. Pr. PF91_Drive recorder - Digital channel setting 1 (DRDC1)
DI6	Statuses of input devices switched on through communication	-	The statuses of the input devices switched on through communication (input device statuses corresponding to the setting values 0040 to 005F of the following) are read. Pr. PF91_Drive recorder - Digital channel setting 1 (DRDC1)

■External input signal in MR-J5(W)-□B(-RJ) ([MELSEC iQ-R, RnMT/NC/RT, CR800-D], [MELSEC iQ-R, RnMT/RT, CR800-D])

Virtual device name	Name	Symbol	Data to be read from the servo amplifier
DI0	Input device statuses	-	The input device statuses corresponding to the setting values 0000 to 001F of the following are read. Pr. PF91_Drive recorder - Digital channel setting 1 (DRDC1)
DI1	Input device statuses	-	The input device statuses corresponding to the setting values 0020 to 003F of the following are read. Pr. PF91_Drive recorder - Digital channel setting 1 (DRDC1)
DI2	Input device statuses	-	The input device statuses corresponding to the setting values 0040 to 005F of the following are read. Pr. PF91_Drive recorder - Digital channel setting 1 (DRDC1)
DI3	External input pin statuses	-	The statuses of the listed input devices are assigned to the bits in order from bit 0 and read. For details on the input devices, refer to the following. 📖MR-J5 User's Manual (Hardware)
DI4	Statuses of input devices switched on through communication	-	The input device statuses switched on through communications (corresponding to the setting values 0000 to 001F) are read. Pr. PF91_Drive recorder - Digital channel setting 1 (DRDC1)
DI5	Statuses of input devices switched on through communication	-	The statuses of the input devices switched on through communication (input device statuses corresponding to the setting values 0020 to 003F of the following) are read. Pr. PF91_Drive recorder - Digital channel setting 1 (DRDC1)
DI6	Statuses of input devices switched on through communication	-	The statuses of the input devices switched on through communication (input device statuses corresponding to the setting values 0040 to 005F of the following) are read. Pr. PF91_Drive recorder - Digital channel setting 1 (DRDC1)

■External input signal in MR-JET-G ([MELSEC iQ-R, RnMT/NC/RT, CR800-D], [MELSEC iQ-R, RnMT/RT, CR800-D])

Virtual device name	Name	Symbol
DI0	Input device statuses	-
DI1	Input device statuses	-
DI2	Input device statuses	-
DI3	External input pin statuses	-
DI4	Statuses of input devices switched on through communication	-
DI5	Statuses of input devices switched on through communication	-
DI6	Statuses of input devices switched on through communication	-

■External input signal in MR-JE-B and MR-JE-BF ([MELSEC iQ-R, RnMT/NC/RT, CR800-D], [MELSEC iQ-R, RnMT/RT, CR800-D])

Virtual device name	Name	Symbol	Data to be read from the servo amplifier
DI0	Input device statuses	-	System information
DI1	Input device statuses	-	System information
DI2	Input device statuses	-	System information
DI3	External input pin statuses	-	The statuses of the listed input devices are assigned to the bits in order from bit 0 and read. For details on the input devices, refer to the following. 📖MR-JE-_B SERVO AMPLIFIER INSTRUCTION MANUAL
DI4	Statuses of input devices switched on through communication	-	System information
DI5	Statuses of input devices switched on through communication	-	System information
DI6	Statuses of input devices switched on through communication	-	System information

■External input signal in MR-J4-GF(-RJ) ([MELSEC iQ-R, RnMT/NC/RT, CR800-D], [MELSEC iQ-R, RnMT/RT, CR800-D])

Virtual device name	Name	Symbol	Data to be read from the servo amplifier
DI0	Input device statuses	-	System information
DI1	Input device statuses	-	System information
DI2	Input device statuses	-	System information
DI3	External input pin statuses	-	The statuses of the listed input devices are assigned to the bits in order from bit 0 and read. For details on the input devices, refer to the following. MR-J4-_GF_(-RJ) Servo Amplifier Instruction Manual (Motion Mode)
DI4	Statuses of input devices switched on through communication	-	System information
DI5	Statuses of input devices switched on through communication	-	System information
DI6	Statuses of input devices switched on through communication	-	System information

■External input signal in MR-J4(W)-□B-RJ ([MELSEC iQ-R, RnMT/NC/RT, CR800-D], [MELSEC iQ-R, RnMT/RT, CR800-D])

Virtual device name	Name	Symbol	Data to be read from the servo amplifier
DI0	Input device statuses	-	System information
DI1	Input device statuses	-	System information
DI3	External input pin statuses	-	The statuses of the listed input devices are assigned to the bits in order from bit 0 and read. For details on the input devices, refer to the following. MR-J4-_B_(-RJ) SERVO AMPLIFIER INSTRUCTION MANUAL
DI4	Statuses of input devices switched on through communication	-	System information
DI5	Statuses of input devices switched on through communication	-	System information

■External output signal in MR-J5-G(-RJ) and MR-J5W□-G ([MELSEC iQ-R, RnMT/NC/RT, CR800-D], [MELSEC iQ-R, RnMT/RT, CR800-D])

Virtual device name	Name	Symbol	Data to be read from the servo amplifier
DO0	Output device statuses	-	The output device statuses corresponding to the setting values 8000 to 801F of the following are read. Pr. PF91_Drive recorder - Digital channel setting 1 (DRDC1)
DO1	Output device statuses	-	The output device statuses corresponding to the setting values 8020 to 803F of the following are read. Pr. PF91_Drive recorder - Digital channel setting 1 (DRDC1)
DO2	Output device statuses	-	The output device statuses corresponding to the setting values 8040 to 805F of the following are read. Pr. PF91_Drive recorder - Digital channel setting 1 (DRDC1)
DO4	External output pin statuses	-	The statuses of the listed output devices are assigned to the bits in order from bit 0 and read. For details on the output devices, refer to the following. MR-J5 User's Manual (Hardware)

■External output signal in MR-J5D□-G ([MELSEC iQ-R, RnMT/NC/RT, CR800-D], [MELSEC iQ-R, RnMT/RT, CR800-D])

Virtual device name	Name	Symbol	Data to be read from the servo amplifier
DO0	Output device statuses	-	The output device statuses corresponding to the setting values 8000 to 801F of the following are read. Pr. PF91_Drive recorder - Digital channel setting 1 (DRDC1)
DO1	Output device statuses	-	The output device statuses corresponding to the setting values 8020 to 803F of the following are read. Pr. PF91_Drive recorder - Digital channel setting 1 (DRDC1)
DO2	Output device statuses	-	The output device statuses corresponding to the setting values 8040 to 805F of the following are read. Pr. PF91_Drive recorder - Digital channel setting 1 (DRDC1)
DO4	External output pin statuses	-	The statuses of the listed output devices are assigned to the bits in order from bit 0 and read. For details on the output devices, refer to the following. 📖MR-J5 User's Manual (Hardware)

■External output signal in MR-J5(W)-□B(-RJ) ([MELSEC iQ-R, RnMT/NC/RT, CR800-D], [MELSEC iQ-R, RnMT/RT, CR800-D])

Virtual device name	Name	Symbol	Data to be read from the servo amplifier
DO0	Output device statuses	-	The output device statuses corresponding to the setting values 8000 to 801F of the following are read. Pr. PF91_Drive recorder - Digital channel setting 1 (DRDC1)
DO1	Output device statuses	-	The output device statuses corresponding to the setting values 8020 to 803F of the following are read. Pr. PF91_Drive recorder - Digital channel setting 1 (DRDC1)
DO2	Output device statuses	-	The output device statuses corresponding to the setting values 8040 to 805F of the following are read. Pr. PF91_Drive recorder - Digital channel setting 1 (DRDC1)
DO4	External output pin statuses	-	The statuses of the listed output devices are assigned to the bits in order from bit 0 and read. For details on the output devices, refer to the following. 📖MR-J5 User's Manual (Hardware)

■External output signal in MR-JET-G ([MELSEC iQ-R, RnMT/NC/RT, CR800-D], [MELSEC iQ-R, RnMT/RT, CR800-D])

Virtual device name	Name	Symbol
DO0	Output device statuses	-
DO1	Output device statuses	-
DO2	Output device statuses	-
DO4	External output pin statuses	-

■External output signal in MR-JE-B and MR-JE-BF ([MELSEC iQ-R, RnMT/NC/RT, CR800-D], [MELSEC iQ-R, RnMT/RT, CR800-D])

Virtual device name	Name	Symbol	Data to be read from the servo amplifier
DO0	Output device statuses	-	System information
DO1	Output device statuses	-	System information
DO2	Output device statuses	-	System information
DO4	External output pin statuses	-	The statuses of the listed output devices are assigned to the bits in order from bit 0 and read. For details on the output devices, refer to the following. 📖MR-JE-_B SERVO AMPLIFIER INSTRUCTION MANUAL

■External output signal in MR-J4-GF(-RJ) ([MELSEC iQ-R, RnMT/NC/RT, CR800-D], [MELSEC iQ-R, RnMT/RT, CR800-D])

Virtual device name	Name	Symbol	Data to be read from the servo amplifier
DO0	Output device statuses	-	System information
DO1	Output device statuses	-	System information
DO2	Output device statuses	-	System information
DO4	External output pin statuses	-	The statuses of the listed output devices are assigned to the bits in order from bit 0 and read. For details on the output devices, refer to the following. 📖MR-J4-_GF_(-RJ) Servo Amplifier Instruction Manual (Motion Mode)

■External output signal in MR-J4(W)-□B-RJ ([MELSEC iQ-R, RnMT/NC/RT, CR800-D], [MELSEC iQ-R, RnMT/RT, CR800-D])

Virtual device name	Name	Symbol	Data to be read from the servo amplifier
DO0	Output device statuses	-	System information
DO1	Output device statuses	-	System information
DO4	External output pin statuses	-	The statuses of the listed output devices are assigned to the bits in order from bit 0 and read. For details on the output devices, refer to the following. 📖MR-J4-_B_(-RJ) SERVO AMPLIFIER INSTRUCTION MANUAL

■Life Diagnosis ([MELSEC iQ-R, RnMT/NC/RT, CR800-D], [MELSEC iQ-R, RnMT/RT, CR800-D])

○: Available

×: Not available

Virtual device name	Name	Symbol	MR-J4(W)-□B(-RJ)	MR-J4-GF(-RJ)	MR-JE-□B	MR-JE-□BF	MR-J5-G(-RJ), MR-J5W□-G	MR-JET-G	MR-J5D□-G	MR-J5-□B(-RJ)
ALD0	Cumulative power-on time	-	○	○	○	○	○	○	○	○
ALD1	Number of inrush current switching times	-	○	○	○	○	○	○	○	○

■Input signal for test operation (for test operation) ([MELSEC iQ-R, RnMT/NC/RT, CR800-D], [MELSEC iQ-R, RnMT/RT, CR800-D])

○: Available

×: Not available

Virtual device name	Name	Symbol	MR-J4(W)-□B(-RJ)	MR-J4-GF(-RJ)	MR-JE-□B	MR-JE-□BF	MR-J5-G(-RJ), MR-J5W□-G	MR-JET-G	MR-J5D□-G	MR-J5-□B(-RJ)
TMI0	Input signal for test operation 1	-	○	○	○	○	○	○	○	○
TMI1	Input signal for test operation 2	-	○	○	○	○	○	○	○	○
TMI2	Input signal for test operation 3	-	×	×	×	×	×	×	×	×

When using the input signal for test operation (for test operation), note the following.

Precautions	Description
Writing a value to a virtual device using an object	Numerical input cannot be used. Use a word switch for writing.

■Forced output of signal pin (for test operation) ([MELSEC iQ-R, RnMT/NC/RT, CR800-D], [MELSEC iQ-R, RnMT/RT, CR800-D])

○: Available

×: Not available

Virtual device name	Name	Symbol	MR-J4(W)-□B(-RJ)	MR-J4-GF(-RJ)	MR-JE-□B	MR-JE-□BF	MR-J5-G(-RJ), MR-J5W□-G	MR-JET-G	MR-J5D□-G	MR-J5-□B(-RJ)
TMO0	Forced output of signal pin	-	○	○	○	○	○	○	○	○

When using the forced output of signal pin (for test operation), note the following.

Precautions	Description
Writing a value to a virtual device using an object	Numerical input cannot be used. Use a word switch for writing.

■Set data (for test operation) ([MELSEC iQ-R, RnMT/NC/RT, CR800-D], [MELSEC iQ-R, RnMT/RT, CR800-D])

○: Available

×: Not available

Virtual device name	Name	Symbol	MR-J4(W)-□B(-RJ)	MR-J4-GF(-RJ)	MR-JE-□B	MR-JE-□BF	MR-J5-G(-RJ), MR-J5W□-G	MR-JET-G	MR-J5D□-G	MR-J5-□B(-RJ)
TMD0	Writes the speed (test mode)	-	○	○	○	○	×	×	×	×
	Motor speed		×	×	×	×	○	○	○	○
TMD1	Writes the acceleration/deceleration time constant (test mode)	-	○	○	○	○	×	×	×	×
	Write acceleration/deceleration time constant		×	×	×	×	○	○	○	○
TMD3	Writes the moving distance (test mode)	-	○	○	○	○	×	×	×	×
	Move distance		×	×	×	×	○	○	○	○

When using the set data (for test operation), note the following.

Precautions	Description
Writing a value to a virtual device using an object	Numerical input cannot be used. Use a word switch for writing.

A

Precautions for virtual servo amplifier devices ([MELSEC iQ-R, RnMT/NC/RT, CR800-D], [MELSEC iQ-R, RnMT/RT, CR800-D])

■When handling real numbers for virtual servo amplifier devices

For the servo amplifier, if a real number is written to a virtual device, only the integer portion of the number is stored into the device.

Example) When 12.34 is entered with the numerical input on the GOT, the value is written as 1234 to the device of the servo amplifier.

If the data type of the virtual servo amplifier device is set to [Real], the value after the writing may differ from the one before the writing.

Additionally, the monitoring process may take a longer time.

Therefore, select one of the following items as the data type of the virtual device.

- Signed 16-bit binary data
- Unsigned 16-bit binary data
- Signed 32-bit binary data
- Unsigned 32-bit binary data

When you use the value of the virtual servo amplifier device, remember that only the integer portion of the value is stored in the device.

To display a real number on the numerical display or numerical input object, set [Format] to [Real] and select [Adjust Decimal Point Range] in the object setting.

■Data type and format settings for using virtual servo amplifier devices

When using virtual servo amplifier devices in the object or other settings, the data type and format must be set according to the notation of the value that the virtual device handles.

For notation of the virtual device values, refer to the following.

📖Instruction manual for the servo amplifier used

📖MR Configurator2 HELP

When real numbers are stored in virtual devices, set the data type as shown below instead of setting [Real].

The following shows a setting example for using virtual servo amplifier devices for an object.

Example) When using a numerical display

Notation of the virtual device values	Setting
Decimal number (positive values only)	• [Data Type]: [Unsigned BIN16] ([Unsigned BIN32] for 65536 or more) • [Format]: [Unsigned Decimal]
Decimal number (positive and negative values)	• [Data Type]: [Signed BIN16] ([Signed BIN32] for -32769 or less, and 32768 or more) • [Format]: [Signed Decimal]
Hexadecimal number	• [Data Type]: [Unsigned BIN16] ([Unsigned BIN32] for 0x10000 or more) • [Format]: [Hexadecimal]
Decimal point notation (positive values only)	• [Data Type]: [Unsigned BIN16] ([Unsigned BIN32] as necessary) • [Format]: [Real] • [Digits (Integral)]: Set the number of digits in the integral portion. • [Digits (Fractional)]: Set the number of digits in the fractional portion. • [Adjust Decimal Point Range]: Selected
Decimal point notation (positive and negative values)	• [Data Type]: [Signed BIN16] ([Signed BIN32] as necessary) • [Format]: [Real] • [Digits (Integral)]: Set the number of digits in the integral portion. • [Digits (Fractional)]: Set the number of digits in the fractional portion. • [Adjust Decimal Point Range]: Selected
When the notation varies by digit	• [Data Type]: [Unsigned BIN16] ([Unsigned BIN32] for 0x10000 or more) • [Format]: [Hexadecimal] • On the [Operation/Script] tab, select [Data Operation] for [Operation Type], and set [Bit Mask] or [Bit Shift].

■Specifying consecutive virtual servo amplifier devices

The GOT does not support writing/reading data to/from consecutive virtual servo amplifier devices.

Virtual inverter devices ([MELSEC iQ-R, RnMT/NC/RT, CR800-D], [MELSEC iQ-R, RnMT/RT, CR800-D])

The following shows the correspondence between the virtual devices used in the GOT and the inverter data.

Virtual device name	Reference
IOST	☞ Page 1469 I/O terminal monitor ([MELSEC iQ-R, RnMT/NC/RT, CR800-D], [MELSEC iQ-R, RnMT/RT, CR800-D])
CMD	☞ Page 1471 Operation command ([MELSEC iQ-R, RnMT/NC/RT, CR800-D], [MELSEC iQ-R, RnMT/RT, CR800-D])
	☞ Page 1472 Operation when turning on/off one of the CMD3 to CMD12 devices ([MELSEC iQ-R, RnMT/NC/RT, CR800-D], [MELSEC iQ-R, RnMT/RT, CR800-D])
	☞ Page 1472 Operation when turning on/off one of the CMD48 to CMD52 devices (MELSEC iQ-R, RnMT/NC/RT, CR800-D], [MELSEC iQ-R, RnMT/RT, CR800-D])
AL	☞ Page 1472 Faults history ([MELSEC iQ-R, RnMT/NC/RT, CR800-D], [MELSEC iQ-R, RnMT/RT, CR800-D])
LPr	☞ Page 1474 Parameter (32-bit) ([MELSEC iQ-R, RnMT/NC/RT, CR800-D], [MELSEC iQ-R, RnMT/RT, CR800-D])
OP	☞ Page 1475 Operation parameter ([MELSEC iQ-R, RnMT/NC/RT, CR800-D], [MELSEC iQ-R, RnMT/RT, CR800-D])
PV	☞ Page 1476 Current value monitor ([MELSEC iQ-R, RnMT/NC/RT, CR800-D], [MELSEC iQ-R, RnMT/RT, CR800-D])

The lists of virtual devices shown in this section explain the FR-A800 Plus series and FR-E800 series models using the following abbreviations.

Series	Abbreviation	Model
FR-A800 Plus series	CRN	FR-A8□0-CRN FR-A8□2-CRN FR-A8□0-E-CRN FR-A8□2-E-CRN
	R2R	FR-A8□0-R2R FR-A8□2-R2R FR-A8□0-E-R2R FR-A8□2-E-R2R
	AWH	FR-A8□0-AWH FR-A8□0-E-AWH
	LC	FR-A8□0-LC FR-A8□0-E-LC
FR-E800 series	E800	FR-E8□0
	E	FR-E8□0-E

■I/O terminal monitor ([MELSEC iQ-R, RnMT/NC/RT, CR800-D], [MELSEC iQ-R, RnMT/RT, CR800-D])

○: Available

×: Not available

Virtual device name	Name	FR-A800 series FR-A800 Plus series FR-F800 series	FR-E800 series		FR-E700 series
			E800	E	FR-E7□0-NE
IOST1	Input terminal STF/DI0	○*1	○*1	○*1	○*1
IOST2	Input terminal STR/DI1	○*1	○*1	○*1	○*1
IOST3	Input terminal RL	○*1	○*1	×	○*1
IOST4	Input terminal RM	○*1	○*1	×	○*1
IOST5	Input terminal RH	○*1	○*1	×	○*1
IOST6	Input terminal RT	○*1	×	×	×
IOST7	Input terminal AU	○*1	×	×	×
IOST8	Input terminal JOG	○*1	×	×	×
IOST9	Input terminal CS	○*1	×	×	×
IOST10	Input terminal MRS	○*1	○*1	×	○*1
IOST11	Input terminal STOP	○*1	×	×	×
IOST12	Input terminal RES	○*1	○*1	×	○*1
IOST32	Output terminal RUN	○*1	○*1	×	○*1
IOST33	Output terminal SU	○*1	×	×	×
IOST34	Output terminal IPF	○*1	×	×	×

Virtual device name	Name	FR-A800 series FR-A800 Plus series FR-F800 series	FR-E800 series		FR-E700 series
			E800	E	FR-E7□0-NE
IOST35	Output terminal OL	○*1	×	×	×
IOST36	Output terminal FU	○*1	○*1	×	○*1
IOST37	Output terminal ABC1	○*1	○*1	○*1	○*1
IOST38	Output terminal ABC2	○*1	×	×	×
IOST39	Output terminal SO	○	×	×	×
IOST48	NET Y1 output	×	○ *1*2	○ *1*2	×
IOST49	NET Y2 output	×	○ *1*2	○ *1*2	×
IOST50	NET Y3 output	×	○ *1*2	○ *1*2	×
IOST51	NET Y4 output	×	○ *1*2	○ *1*2	×
IOST64	Option input terminal X0	○	○	○	×
IOST65	Option input terminal X1	○	○	○	×
IOST66	Option input terminal X2	○	○	○	×
IOST67	Option input terminal X3	○	○	○	×
IOST68	Option input terminal X4	○	○	○	×
IOST69	Option input terminal X5	○	○	○	×
IOST70	Option input terminal X6	○	○	○	×
IOST71	Option input terminal X7	○	○	○	×
IOST72	Option input terminal X8	○	○	○	×
IOST73	Option input terminal X9	○	○	○	×
IOST74	Option input terminal X10	○	○	○	×
IOST75	Option input terminal X11	○	○	○	×
IOST76	Option input terminal X12	○	○	○	×
IOST77	Option input terminal X13	○	○	○	×
IOST78	Option input terminal X14	○	○	○	×
IOST79	Option input terminal X15	○	○	○	×
IOST80	Option input terminal DY	○	○	○	×
IOST96	Option output terminal Y0/DO0	○*1	○*1	○*1	×
IOST97	Option output terminal Y1/DO1	○*1	○*1	○*1	×
IOST98	Option output terminal Y2/DO2	○*1	○*1	○*1	×
IOST99	Option output terminal Y3/DO3	○*1	○*1	○*1	×
IOST100	Option output terminal Y4/DO4	○*1	○*1	○*1	×
IOST101	Option output terminal Y5/DO5	○*1	○*1	○*1	×
IOST102	Option output terminal Y6/DO6	○*1	○*1	○*1	×
IOST103	Option output terminal RA1	○*1	○*1	○*1	×
IOST104	Option output terminal RA2	○*1	○*1	○*1	×
IOST105	Option output terminal RA3	○*1	○*1	○*1	×

*1 The monitor data can be changed by the settings of Pr.180 to Pr.189 (input terminal function selection) or Pr.190 to Pr.196 or Pr.313 to Pr.322 (output terminal function selection).
For the relationship between the parameters and terminals, refer to the following.
📖Manual of the inverter used

*2 Use an inverter having SERIAL (serial No.) "□□211******" or later.
SERIAL (serial No.) is provided on the rating plate of the inverter.

■Operation command ([MELSEC iQ-R, RnMT/NC/RT, CR800-D], [MELSEC iQ-R, RnMT/RT, CR800-D])

○: Available

×: Not available

Virtual device name	Name	FR-A800 series FR-A800 Plus series FR-F800 series	FR-E800 series	FR-E700 series FR-E7□0-NE
CMD0	Stop command	○	○	○
CMD1	Forward rotation command	○	○	○
CMD2	Reverse rotation command	○	○	○
CMD3*1	RL terminal	○*2	○*2	○*2
CMD4*1	RM terminal	○*2	○*2	○*2
CMD5*1	RH terminal	○*2	○*2	○*2
CMD6*1	RT terminal	○*2	○	○
CMD7*1	AU terminal	○*2	○	○
CMD8*1	JOG terminal	○*2*3	○	×
CMD9*1	CS terminal	○*2*3	×	×
CMD10*1	MRS terminal	○*2	○*2	○*2
CMD11*1	STOP terminal	○*2*3	×	×
CMD12*1	RES terminal	○*2*3	○*2*3	○*2
CMD16	Alarm history clear	○	○	○
CMD24	Inverter reset	○	○	○
CMD32	Parameter clear	○	○	○
CMD33	Parameter clear (communication parameters are not cleared)	○	○	○
CMD34	All parameter clear	○	○	○
CMD35	All parameter clear (communication parameters are not cleared)	○	○	○
CMD48	NET X1 input	×	○*2*3*4	×
CMD49	NET X2 input	×	○*2*3*4	×
CMD50	NET X3 input	×	○*2*3*4	×
CMD51	NET X4 input	×	○*2*3*4	×
CMD52	NET X5 input	×	○*2*3*4	×

*1 When the GOT is connected to the PU connector and the operation mode is set to the PU operation mode, the device cannot be used.

*2 The monitor data can be changed by the settings of Pr.180 to Pr.189 (input terminal function selection).
For the relationship between the parameters and terminals, refer to the following.
📖Manual of the inverter used

*3 The device is invalid for the initial state of the inverter in which a function that cannot be controlled by the GOT is set or no function is set.
Change the settings of Pr.180 to Pr.189 (input terminal function selection).

*4 Use an inverter having SERIAL (serial No.) "□□211******" or later.
SERIAL (serial No.) is provided on the rating plate of the inverter.

When using the operation command, note the following.

Precautions	Description
When setting a device for a bit switch.	Do not select [Alternate] for [Switch Action] of the bit switch.
Operation when a CMD device is turned on	☞ Page 1472 Operation when turning on/off one of the CMD3 to CMD12 devices ([MELSEC iQ-R, RnMT/NC/RT, CR800-D], [MELSEC iQ-R, RnMT/RT, CR800-D]) ☞ Page 1472 Operation when turning on/off one of the CMD48 to CMD52 devices (MELSEC iQ-R, RnMT/NC/RT, CR800-D], [MELSEC iQ-R, RnMT/RT, CR800-D])

A

■Operation when turning on/off one of the CMD3 to CMD12 devices ([MELSEC iQ-R, RnMT/NC/RT, CR800-D], [MELSEC iQ-R, RnMT/RT, CR800-D])

The CMD3 to CMD12 devices cannot be controlled simultaneously.

When you turn on/off one of the CMD3 to CMD12 devices, the rest of these devices are turned off.

Use OP4 to control multiple devices from CMD3 to CMD12 simultaneously.

The following shows the relationship between CMD3 to CMD12 and OP4.

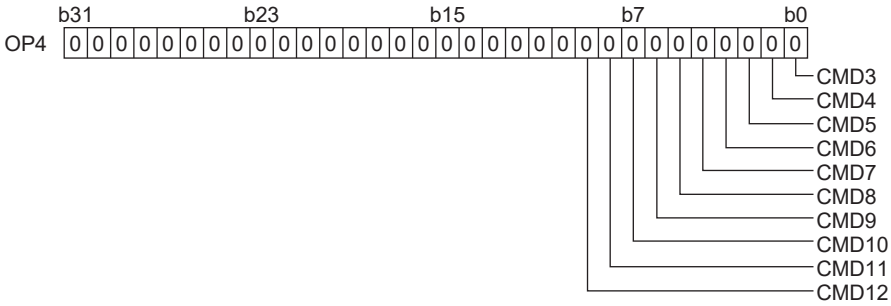

Example) Turning on the CMD3 (RL terminal) and CMD12 (RES terminal) devices

For a hexadecimal value, write 0201.

For a decimal value, write 513.

■Operation when turning on/off one of the CMD48 to CMD52 devices (MELSEC iQ-R, RnMT/NC/RT, CR800-D], [MELSEC iQ-R, RnMT/RT, CR800-D])

The CMD48 to CMD52 devices cannot be controlled simultaneously.

When you turn on/off one of the CMD48 to CMD52 devices, the rest of these devices are turned off.

Use OP5 to control multiple devices from CMD48 to CMD52 simultaneously.

The following shows the relationship between CMD48 to CMD52 and OP5.

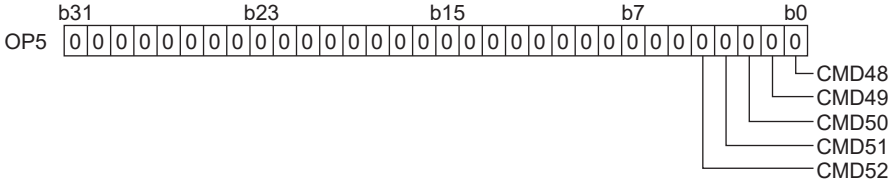

Example) Turing on the CMD48 (NET X1 input) and CMD52 (NET X5 input) devices

For a hexadecimal value, write 0011.

For a decimal value, write 17.

■Faults history ([MELSEC iQ-R, RnMT/NC/RT, CR800-D], [MELSEC iQ-R, RnMT/RT, CR800-D])

○: Available

×: Not available

Virtual device name	Name	FR-A800 series FR-A800 Plus series FR-F800 series	FR-E800 series	FR-E700 series FR-E7□0-NE
AL0	Current fault	○	○	○
AL1	Current warning 1	×	○	×
AL2	Current warning 2	×	○	×
AL100	Faults history 1 (symbol)	○	○	○
AL101	Faults history 1 (output frequency)	○	○	○
AL102	Faults history 1 (output current)	○	○	○
AL103	Faults history 1 (output voltage)	○	○	○
AL104	Faults history 1 (energization time)	○	○	○
AL105	Faults history 1 (year)	○	○	×
AL106	Faults history 1 (month)	○	○	×
AL107	Faults history 1 (day)	○	○	×
AL108	Faults history 1 (hour)	○	○	×

Virtual device name	Name	FR-A800 series FR-A800 Plus series FR-F800 series	FR-E800 series	FR-E700 series FR-E7□0-NE
AL109	Faults history 1 (minute)	○	○	×
AL200	Faults history 2 (symbol)	○	○	○
AL201	Faults history 2 (output frequency)	○	○	○
AL202	Faults history 2 (output current)	○	○	○
AL203	Faults history 2 (output voltage)	○	○	○
AL204	Faults history 2 (energization time)	○	○	○
AL205	Faults history 2 (year)	○	○	×
AL206	Faults history 2 (month)	○	○	×
AL207	Faults history 2 (day)	○	○	×
AL208	Faults history 2 (hour)	○	○	×
AL209	Faults history 2 (minute)	○	○	×
AL300	Faults history 3 (symbol)	○	○	○
AL301	Faults history 3 (output frequency)	○	○	○
AL302	Faults history 3 (output current)	○	○	○
AL303	Faults history 3 (output voltage)	○	○	○
AL304	Faults history 3 (energization time)	○	○	○
AL305	Faults history 3 (year)	○	○	×
AL306	Faults history 3 (month)	○	○	×
AL307	Faults history 3 (day)	○	○	×
AL308	Faults history 3 (hour)	○	○	×
AL309	Faults history 3 (minute)	○	○	×
AL400	Faults history 4 (symbol)	○	○	○
AL401	Faults history 4 (output frequency)	○	○	○
AL402	Faults history 4 (output current)	○	○	○
AL403	Faults history 4 (output voltage)	○	○	○
AL404	Faults history 4 (energization time)	○	○	○
AL405	Faults history 4 (year)	○	○	×
AL406	Faults history 4 (month)	○	○	×
AL407	Faults history 4 (day)	○	○	×
AL408	Faults history 4 (hour)	○	○	×
AL409	Faults history 4 (minute)	○	○	×
AL500	Faults history 5 (symbol)	○	○	○
AL501	Faults history 5 (output frequency)	○	○	○
AL502	Faults history 5 (output current)	○	○	○
AL503	Faults history 5 (output voltage)	○	○	○
AL504	Faults history 5 (energization time)	○	○	○
AL505	Faults history 5 (year)	○	○	×
AL506	Faults history 5 (month)	○	○	×
AL507	Faults history 5 (day)	○	○	×
AL508	Faults history 5 (hour)	○	○	×
AL509	Faults history 5 (minute)	○	○	×
AL600	Faults history 6 (symbol)	○	○	○
AL601	Faults history 6 (output frequency)	○	○	○
AL602	Faults history 6 (output current)	○	○	○
AL603	Faults history 6 (output voltage)	○	○	○
AL604	Faults history 6 (energization time)	○	○	○
AL605	Faults history 6 (year)	○	○	×
AL606	Faults history 6 (month)	○	○	×
AL607	Faults history 6 (day)	○	○	×
AL608	Faults history 6 (hour)	○	○	×
AL609	Faults history 6 (minute)	○	○	×

Virtual device name	Name	FR-A800 series FR-A800 Plus series FR-F800 series	FR-E800 series	FR-E700 series FR-E7□0-NE
AL700	Faults history 7 (symbol)	○	○	○
AL701	Faults history 7 (output frequency)	○	○	○
AL702	Faults history 7 (output current)	○	○	○
AL703	Faults history 7 (output voltage)	○	○	○
AL704	Faults history 7 (energization time)	○	○	○
AL705	Faults history 7 (year)	○	○	×
AL706	Faults history 7 (month)	○	○	×
AL707	Faults history 7 (day)	○	○	×
AL708	Faults history 7 (hour)	○	○	×
AL709	Faults history 7 (minute)	○	○	×
AL800	Faults history 8 (symbol)	○	○	○
AL801	Faults history 8 (output frequency)	○	○	○
AL802	Faults history 8 (output current)	○	○	○
AL803	Faults history 8 (output voltage)	○	○	○
AL804	Faults history 8 (energization time)	○	○	○
AL805	Faults history 8 (year)	○	○	×
AL806	Faults history 8 (month)	○	○	×
AL807	Faults history 8 (day)	○	○	×
AL808	Faults history 8 (hour)	○	○	×
AL809	Faults history 8 (minute)	○	○	×

■Parameter (32-bit) ([MELSEC iQ-R, RnMT/NC/RT, CR800-D], [MELSEC iQ-R, RnMT/RT, CR800-D])

The virtual device numbers (LPr) used in the GOT correspond to the inverter parameter numbers.

For the inverter parameters, refer to the following.

📖Manual of the inverter used

When using a parameter (32-bit), note the following.

Precautions	Description
When setting [8888] or [9999] to a 32-bit parameter (Lpr) of an inverter	[8888] and [9999] are used for particular purposes. From the GOT, if you set these numbers to a 32-bit parameter that can accept a value with a fractional part, you are recommended to set the data type to [Real].

■Operation parameter ([MELSEC iQ-R, RnMT/NC/RT, CR800-D], [MELSEC iQ-R, RnMT/RT, CR800-D])

○: Available

×: Not available

Virtual device name		Name	FR-A800 series FR-A800 Plus series FR-F800 series	FR-E800 series	FR-E700 series FR-E7□0-NE
OP0		Operation frequency(RAM)	○	○	○
OP1		Operation frequency (EEPROM)	○	○	○
OP2		Operation mode	○	○	○
OP3		Operating status	○	○	○
OP4*1*2*3	-	Input terminal command	○	○	○
	b0	CMD3: RL terminal			
	b1	CMD4: RM terminal			
	b2	CMD5: RH terminal			
	b3	CMD6: RT terminal			
	b4	CMD7: AU terminal			
	b5	CMD8: JOG terminal			
	b6	CMD9: CS terminal			
	b7	CMD10: MRS terminal			
	b8	CMD11: STOP terminal			
	b9	CMD12: RES terminal			
OP5*2	-	Input terminal command (extend)	×	○*4	×
	b0	CMD48: NET X1 input			
	b1	CMD49: NET X2 input			
	b2	CMD50: NET X3 input			
	b3	CMD51: NET X4 input			
	b4	CMD52: NET X5 input			

*1 When the GOT is connected to the PU connector and the operation mode is set to the PU operation mode, the device cannot be used.

*2 The monitor data can be changed by the settings of Pr.180 to Pr.189 (input terminal function selection).
For the relationship between the parameters and terminals, refer to the following.
📖Manual of the inverter used

*3 The device is invalid for the initial state of the inverter in which a function that cannot be controlled by the GOT is set or no function is set.
Change the settings of Pr.180 to Pr.189 (input terminal function selection).

*4 Use an inverter having SERIAL (serial No.) "□□211******" or later.
SERIAL (serial No.) is provided on the rating plate of the inverter.

A

■Current value monitor ([MELSEC iQ-R, RnMT/NC/RT, CR800-D], [MELSEC iQ-R, RnMT/RT, CR800-D])

○: Available

×: Not available

Virtual device name	Name	FR-A800 series	FR-A800 Plus series				FR-F800 series	FR-E800 series		FR-E700 series
			CRN	R2R	AWH	LC		E800	E	FR-E7□0-NE
PV1	Output frequency/speed	×	×	×	○	×	×	×	×	○
	Output frequency	○	○	○	×	○	○	○	○	×
PV2	Output current	○	○	○	○	○	○	○	○	○
PV3	Output voltage	○	○	○	○	○	○	○	○	○
PV5	Frequency setting value/speed setting	×	×	×	○	×	×	×	×	○
	Frequency setting value	○	○	○	×	○	○	○	○	×
PV6	Speed/machine speed	○	○	○	○	×	○	○	○	×
	Operation speed	×	×	×	×	○	×	×	×	×
PV7	Motor torque	○	○	○	○	○	○	○	○	○
PV8	Converter output voltage	○	○	○	○	○	○	○	○	○
PV9	Regenerative brake duty	○	○	○	○	○	×	○	○	○
PV10	Electronic thermal O/L relay load factor	○	○	○	○	○	○	○	○	○
PV11	Output current peak value	○	○	○	○	○	○	○	○	○
PV12	Converter output voltage peak value	○	○	○	○	○	○	○	○	○
PV13	Input power	○	○	○	○	○	○	×	×	×
PV14	Output power	○	○	○	○	○	○	○	○	○
PV17	Load meter	○	○	○	○	○	○	○	○	×
PV18	Motor excitation current	○	○	○	○	○	○	○	○	×
PV19	Position pulse	○	○	×	×	○	×	×	×	×
	Analog output signal for dancer tension control	×	×	○	○	×	×	×	×	×
PV20	Cumulative energization time	○	○	○	○	○	○	○	○	○
PV22	Orientation status	○	○	×	×	○	×	×	×	×
	Winding diameter	×	×	○	○	×	×	×	×	×
PV23	Actual operation time	○	○	○	○	○	○	○	○	○
PV24	Motor load factor	○	○	○	○	○	○	○	○	○
PV25	Cumulative power	○	○	○	○	○	○	○	○	○
PV26	Position command (lower digits)	×	○	×	×	×	×	×	×	×
	Line speed command	×	×	○	○	×	×	×	×	×
PV27	Position command (upper digits)	×	○	×	×	×	×	×	×	×
	Actual line speed	×	×	○	○	×	×	×	×	×
PV28	Current position (lower digits)	×	○	×	×	×	×	×	×	×
	Dancer compensation speed	×	×	○	○	×	×	×	×	×
PV29	Current position (upper digits)	×	○	×	×	×	×	×	×	×
	Winding length (upper + lower)	×	×	○	○	×	×	×	×	×
PV30	Droop pulse (lower digits)	×	○	×	×	×	×	×	×	×
	Analog output signal 2 for dancer tension control	×	×	○	○	×	×	×	×	×
PV31	Droop pulse (upper digits)	×	○	×	×	×	×	×	×	×
	Line speed pulse monitor	×	×	○	○	×	×	×	×	×
PV32	Torque command	○	○	○	○	○	×	○	○	×
PV33	Torque current command	○	○	○	○	○	×	○	○	×
PV34	Motor output	○	○	○	○	○	○	×	×	×
PV35	Feedback pulse	○	○	○	○	○	×	×	×	×

Virtual device name	Name	FR-A800 series	FR-A800 Plus series				FR-F800 series	FR-E800 series		FR-E700 series
			CRN	R2R	AWH	LC		E800	E	FR-E7□0-NE
PV36	Torque (positive polarity for driving torque/negative polarity for regenerative braking torque)	○	○	○	○	○	×	×	×	×
PV38	Trace status	×	○	○	○	×	×	×	×	×
PV39	SSCNET III communication status	○	○	×	×	○	×	×	×	×
PV40	PLC function user monitor 1	○	○	○	○	○	○	○	○	×
PV41	PLC function user monitor 2	○	○	○	○	○	○	○	○	×
PV42	PLC function user monitor 3	○	○	○	○	○	○	○	○	×
PV43	Station number (RS-485 terminals)	×	○	○	○	×	×	×	×	×
PV44	Station number (PU)	×	○	○	○	×	×	×	×	×
PV45	Station number (CC-Link)	×	○	○	○	×	×	×	×	×
PV46	Motor temperature	○	○	○	○	○	×	×	×	×
PV50	Energy saving effect	○	○	○	○	○	○	○	○	×
PV51	Cumulative energy saving	○	○	○	○	○	○	○	○	×
PV52	PID set point	○	○	○	○	○	○	○	○	○
PV53	PID measured value	○	○	○	○	○	○	○	○	○
PV54	PID deviation	○	○	○	○	○	○	○	○	○
PV61	Motor thermal load factor	○	○	○	○	○	○	○	○	○
PV62	Inverter thermal load factor	○	○	○	○	○	○	○	○	○
PV63	Cumulative power 2	×	×	×	×	×	×	×	×	○
	Winding length (upper)	×	×	○	○	×	×	×	×	×
PV64	PTC thermistor resistance	○	○	○	○	○	○	×	×	×
PV67	PID measured value 2	○	○	○	○	○	○	○	○	×
PV68	Emergency drive status	×	×	×	×	×	×	×	×	×
PV69	PID input pressure value	×	×	×	×	×	○	×	×	×
PV71	Cumulative pulse	○	○	○	○	○	×	×	×	×
PV72	Cumulative pulse overflow times	○	○	○	○	○	×	×	×	×
PV73	Cumulative pulse (control terminal option)	○	○	○	○	○	×	×	×	×
PV74	Cumulative pulse overflow times (control terminal option)	○	○	○	○	○	×	×	×	×
PV75	Multi-revolution counter	○	○	×	×	○	×	×	×	×
PV77	32-bit cumulative energy (lower 16 bits)	×	×	×	○	×	×	×	×	×
PV78	32-bit cumulative energy (upper 16 bits)	×	×	×	○	×	×	×	×	×
PV79	32-bit cumulative energy (lower 16 bits)	×	×	×	○	×	×	×	×	×
PV80	32-bit cumulative energy (upper 16 bits)	×	×	×	○	×	×	×	×	×
PV81	BACnet reception status	×	×	×	×	×	○	×	×	×
	Tension command after taper compensation	×	×	○	○	×	×	×	×	×
PV82	BACnet token pass counter	×	×	×	×	×	○	×	×	×
	Winding diameter compensation torque command	×	×	○	○	×	×	×	×	×
PV83	BACnet valid APDU counter	×	×	×	×	×	○	×	×	×
	Inertia compensation	×	×	○	○	×	×	×	×	×
PV84	BACnet communication error counter	×	×	×	×	×	○	×	×	×
	Mechanical loss compensation	×	×	○	○	×	×	×	×	×
PV85	BACnet terminal FM/CA output level	×	×	×	×	×	○	×	×	×
	Terminal 1 input voltage	×	×	○	○	×	×	×	×	×

A

Virtual device name	Name	FR-A800 series	FR-A800 Plus series				FR-F800 series	FR-E800 series		FR-E700 series
			CRN	R2R	AWH	LC		E800	E	FR-E7□0-NE
PV86	BACnet terminal AM output level	×	×	×	×	×	○	×	×	×
	Terminal 1 input after calibration (%)	×	×	○	○	×	×	×	×	×
PV87	Remote output value 1	○	○	○	○	○	○	×	×	×
PV88	Remote output value 2	○	○	○	○	○	○	×	×	×
PV89	Remote output value 3	○	○	○	○	○	○	×	×	×
PV90	Remote output value 4	○	○	○	○	○	○	×	×	×
PV91	PID manipulated variable	○	○	○	○	○	○	○	○	×
PV92	Second PID set point	○	○	×	×	○	○	×	×	×
	PID torque control actual tension	×	×	○	×	×	×	×	×	×
PV93	Second PID measured value	○	○	×	×	○	○	×	×	×
	PID torque control manipulated tension	×	×	○	×	×	×	×	×	×
PV94	Second PID deviation	○	○	×	×	○	○	×	×	×
PV95	Second PID measured value 2	○	○	×	×	○	○	×	×	×
PV96	Second PID manipulated variable	○	○	×	×	○	○	×	×	×
PV97	Dancer main set speed (For FR-E800 and FR-E800-E, dancer main speed setting)	○	○	×	×	○	×	○	○	×
	Winding diameter compensation speed	×	×	○	○	×	×	×	×	×
PV98	Control circuit temperature	○	○	○	○	○	○	×	×	×

[MELSEC iQ-F]

GT 27 GT 25 GT 23 GT 21 GS 25 GS 21

Item	Reference
Specifications of bit devices	☞ Page 1479 Monitoring-supported bit devices ([MELSEC iQ-F])
	☞ Page 1481 Setting virtual bit devices for servo amplifiers ([MELSEC iQ-F])
	☞ Page 1483 Availability of writing/reading data to/from bit devices ([MELSEC iQ-F])
Specifications of word devices	☞ Page 1484 Monitoring-supported word devices ([MELSEC iQ-F])
	☞ Page 1486 Setting virtual word devices for servo amplifiers ([MELSEC iQ-F])
	☞ Page 1489 Availability of writing/reading data to/from word devices ([MELSEC iQ-F])
Specifications of double-word devices	☞ Page 1490 Monitoring-supported double-word devices ([MELSEC iQ-F])
	☞ Page 1491 Setting virtual double-word devices for servo amplifiers ([MELSEC iQ-F])
	☞ Page 1493 Availability of writing/reading data to/from double-word devices ([MELSEC iQ-F])
Specifications of virtual servo amplifier devices	☞ Page 1493 Virtual servo amplifier devices ([MELSEC iQ-F])
	☞ Page 1495 Precautions for virtual servo amplifier devices ([MELSEC iQ-F])

Monitoring-supported bit devices ([MELSEC iQ-F])

The following table shows monitoring-supported bit devices.

To check whether writing/reading data to/from each device is available, refer to the following.

☞ Page 1483 Availability of writing/reading data to/from bit devices ([MELSEC iQ-F])

○: Available

×: Not available

Device name		Device No. representation	Setting range	Specifications of EG devices*1	
				Assignment to EG devices	Access using a client
X	Input relay	Octal	0000 to 1777	○	○
Y	Output relay	Octal	0000 to 1777	○	○
B	Link relay	Hexadecimal	0000 to 7FFF	○	○
M	Internal relay	Decimal	0 to 32767	○	○
L	Latch relay	Decimal	0 to 32767	○	○
S	Step relay	Decimal	0 to 4095	○	○
F	Annunciator	Decimal	0 to 32767	○	○
TC	Timer coil	Decimal	0 to 1023	○	○ (Not usable as word data)
TT	Timer contact	Decimal	0 to 1023	○	○ (Not usable as word data)
CC	Counter coil	Decimal	0 to 1023	○	○ (Not usable as word data)
CT	Counter contact	Decimal	0 to 1023	○	○ (Not usable as word data)
SC	Retentive timer coil	Decimal	0 to 1023	○	○ (Not usable as word data)
SS	Retentive timer contact	Decimal	0 to 1023	○	○ (Not usable as word data)
SB	Link special relay	Hexadecimal	0000 to 7FFF	○	○
SM	Special relay	Decimal	0 to 9999	○	○
RX*3	Remote input	Hexadecimal	0000 to 3FFF	○	○
RY*3	Remote output	Hexadecimal	0000 to 3FFF	○	○

A

Device name		Device No. representation	Setting range	Specifications of EG devices*1	
				Assignment to EG devices	Access using a client
LCC	Long counter coil	Decimal	0 to 1023	○	○ (Not usable as word data)
LCT	Long counter contact	Decimal	0 to 1023	○	○ (Not usable as word data)
BL	SFC block	Decimal	0 to 31	×	×
BLS	Step relay (block)	Decimal	0 to 511	×	×
SP*2	Servo amplifier request	Decimal	☞ Page 1481 Setting virtual bit devices for servo amplifiers ([MELSEC iQ-F])	×	×
OM*2	Operation mode selection	Decimal	☞ Page 1481 Setting virtual bit devices for servo amplifiers ([MELSEC iQ-F])	×	×
TMB*2	Instruction demand (for test operation)	Decimal	☞ Page 1481 Setting virtual bit devices for servo amplifiers ([MELSEC iQ-F])	×	×
OTI*2	One-touch tuning instruction	Decimal	☞ Page 1481 Setting virtual bit devices for servo amplifiers ([MELSEC iQ-F])	×	×
GFDI*2	Gear failure diagnosis instruction	Decimal	☞ Page 1481 Setting virtual bit devices for servo amplifiers ([MELSEC iQ-F])	×	×
ECCDI*2	Encoder communication circuit diagnosis instruction	Decimal	☞ Page 1481 Setting virtual bit devices for servo amplifiers ([MELSEC iQ-F])	×	×

*1 For the devices assigned to EG devices (gateway devices) and the compatible clients, refer to the following.
📖GT Designer3 (GOT2000) Screen Design Manual

*2 Virtual servo amplifier device
For the details, refer to the following.
☞ Page 1493 Virtual servo amplifier devices ([MELSEC iQ-F])

*3 The target device of the host station can be monitored only.
Monitoring the target device of any other station causes a system error.

Setting virtual bit devices for servo amplifiers ([MELSEC iQ-F])

For virtual servo amplifier devices, the notation differs according to the connection type between the GOT and the servo amplifier.

Select one of the following according to the control type in the device setting dialog.

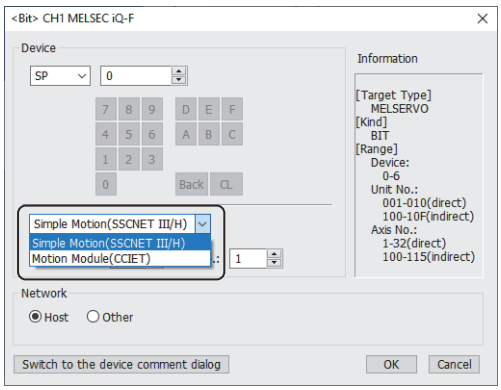

Item	Description
[Simple Motion(SSCNET III/H)]	Connection through a Simple Motion module • [Unit No.]: Set the first 2 digits of the 3-digit number that represents the start I/O number of the Simple Motion module. • [Axis No.]: Set the axis number to be monitored.
[Motion Module(CCIET)]	Select this item to connect the GOT through a Motion module (FX5-nSSC-G). After the selection, set a device that enables axis designation to display the following item. • [Axis Designation]: Set the axis to be monitored.

The following shows the notation and setting range of virtual devices.

Device name	Device notation and setting range		Notation example
SP	[Simple Motion(SSCNET III/H)]	U(Unit No.)-A(Axis No.)-SP(Device) • Unit No. (hexadecimal): 01 to FF (direct), 100 to 10F (indirect) • Axis No. (decimal): 1 to 32 (direct), 100 to 115 (indirect) • Device (decimal): 0 to 6	U10-A32-SP0
	[Motion Module(CCIET)]	AA(Axis designation)-SP(Device) • Axis designation (decimal): 1 to 3 (direct), 100 to 115 (indirect) • Device (decimal): 0 to 6	AA3-SP0
OM	[Simple Motion(SSCNET III/H)]	U(Unit No.)-A(Axis No.)-OM(Device) • Unit No. (hexadecimal): 01 to FF (direct), 100 to 10F (indirect) • Axis No. (decimal): 1 to 32 (direct), 100 to 115 (indirect) • Device (decimal): 0 to 2, 4 to 5	U10-A32-OM0
	[Motion Module(CCIET)]	AA(Axis designation)-OM(Device) • Axis designation (decimal): 1 to 3 (direct), 100 to 115 (indirect) • Device (decimal): 0 to 2, 4 to 5	AA3-OM0
TMB	[Simple Motion(SSCNET III/H)]	U(Unit No.)-A(Axis No.)-TMB(Device) • Unit No. (hexadecimal): 01 to FF (direct), 100 to 10F (indirect) • Axis No. (decimal): 1 to 32 (direct), 100 to 115 (indirect) • Device (decimal): 1 to 6	U10-A32-TMB1
	[Motion Module(CCIET)]	AA(Axis designation)-TMB(Device) • Axis designation (decimal): 1 to 3 (direct), 100 to 115 (indirect) • Device (decimal): 1 to 6	AA3-TMB1
OTI	[Simple Motion(SSCNET III/H)]	U(Unit No.)-A(Axis No.)-OTI(Device) • Unit No. (hexadecimal): 01 to FF (direct), 100 to 10F (indirect) • Axis No. (decimal): 1 to 32 (direct), 100 to 115 (indirect) • Device (decimal): 0 to 5	U10-A32-OTI0
	[Motion Module(CCIET)]	AA(Axis designation)-OTI(Device) • Axis designation (decimal): 1 to 3 (direct), 100 to 115 (indirect) • Device (decimal): 0 to 5	AA3-OTI0
GFDI	[Motion Module(CCIET)]	AA(Axis designation)-GFDI(Device) • Axis designation (decimal): 1 to 3 (direct), 100 to 115 (indirect) • Device (decimal): 0 to 1	AA3-GFDI0

Device name	Device notation and setting range		Notation example
ECCDI	[Motion Module(CCIET)]	AA(Axis designation)-ECCDI(Device) • Axis designation (decimal): 1 to 3 (direct), 100 to 115 (indirect) • Device (decimal): 0 to 1	AA3-ECCDI0

For indirect specification of a module or axis number, refer to the following.

☞ Page 1398 Indirect specification of a module number ([MELSEC iQ-R, RnMT/NC/RT, CR800-D], [MELSEC iQ-R, RnMT/RT, CR800-D])

☞ Page 1399 Indirect specification of an axis number or axis designation ([MELSEC iQ-R, RnMT/NC/RT, CR800-D], [MELSEC iQ-R, RnMT/RT, CR800-D])

Availability of writing/reading data to/from bit devices ([MELSEC iQ-F])

The following shows whether writing/reading data to/from bit devices is available by device type.

When the device type is other than the bit type, set the device No. in multiples of 16.

R/W: Both read and write

R/-: Read only

-/W: Write only

-/-: No read/write access

Device name	Device type				
	Bit	Byte (8 bits)	Word (16 bits)	Double-word (32 bits)	Quad-word (64 bits)
X	R/W	-/-	R/W	R/W	-/-
Y	R/W	-/-	R/W	R/W	-/-
B	R/W	-/-	R/W	R/W	-/-
M	R/W	-/-	R/W	R/W	-/-
L	R/W	-/-	R/W	R/W	-/-
S	R/W	-/-	R/W	R/W	-/-
F	R/W	-/-	R/W	R/W	-/-
TC	R/W	-/-	-/-	-/-	-/-
TT	R/W	-/-	-/-	-/-	-/-
CC	R/W	-/-	-/-	-/-	-/-
CT	R/W	-/-	-/-	-/-	-/-
SC	R/W	-/-	-/-	-/-	-/-
SS	R/W	-/-	-/-	-/-	-/-
SB	R/W	-/-	R/W	R/W	-/-
SM	R/W	-/-	R/W	R/W	-/-
RX	R/W	-/-	R/W	R/W	-/-
RY	R/W	-/-	R/W	R/W	-/-
LCC	R/W	-/-	-/-	-/-	-/-
LCT	R/W	-/-	-/-	-/-	-/-
BL	R/W	-/-	-/-	-/-	-/-
BLS	R/W	-/-	-/-	-/-	-/-
SP	-/W	-/-	-/-	-/-	-/-
OM	-/W	-/-	-/-	-/-	-/-
TMB	-/W	-/-	-/-	-/-	-/-
OTI	-/W	-/-	-/-	-/-	-/-
GFDI	-/W	-/-	-/-	-/-	-/-
ECCDI	-/W	-/-	-/-	-/-	-/-

Monitoring-supported word devices ([MELSEC iQ-F])

The following table shows monitoring-supported word devices.

To check whether writing/reading data to/from each device is available, refer to the following.

☞ Page 1489 Availability of writing/reading data to/from word devices ([MELSEC iQ-F])

○: Available

×: Not available

Device name		Device No. representation	Setting range	Specifications of EG devices[*1]	
				Assignment to EG devices	Access using a client
TN	Timer current value	Decimal	0 to 1023	○	○
CN	Counter current value	Decimal	0 to 1023	○	○
SN	Retentive timer current value	Decimal	0 to 1023	○	○
D	Data register	Decimal	0 to 7999	○	○
SD	Special register	Decimal	0 to 11999	○	○
W	Link register	Hexadecimal	0000 to 7FFF	○	○
SW	Link special register	Hexadecimal	0000 to 7FFF	○	○
R[*4]	File register	Decimal	0 to 32767	○	○
Z	Index register	Decimal	0 to 23	○	○ (Not usable as bit data)
G[*5]	Buffer memory (Intelligent function module)	Decimal	U(Unit No.)-G(Device) Notation example: U10-G100 • Unit No. (hexadecimal): 01 to FF • Device (decimal): 0 to 262143 For the unit No., set the module number of the intelligent function module.	○	○
Ww[*3]	Remote register	Hexadecimal	0000 to 1FFF	○	○
Wr[*3]	Remote register	Hexadecimal	0000 to 1FFF	○	○
PA[*2]	Basic parameter	Decimal	☞ Page 1486 Setting virtual word devices for servo amplifiers ([MELSEC iQ-F])	×	×
PB[*2]	Gain filter parameter	Decimal	☞ Page 1486 Setting virtual word devices for servo amplifiers ([MELSEC iQ-F])	×	×
PC[*2]	Extension setting parameter	Decimal	☞ Page 1486 Setting virtual word devices for servo amplifiers ([MELSEC iQ-F])	×	×
PD[*2]	I/O setting parameter	Decimal	☞ Page 1486 Setting virtual word devices for servo amplifiers ([MELSEC iQ-F])	×	×
PO[*2]	Option unit parameter	Decimal	☞ Page 1486 Setting virtual word devices for servo amplifiers ([MELSEC iQ-F])	×	×
PS[*2]	Special parameter	Decimal	☞ Page 1486 Setting virtual word devices for servo amplifiers ([MELSEC iQ-F])	×	×
PU[*2]	Multi encoder parameter	Decimal	☞ Page 1486 Setting virtual word devices for servo amplifiers ([MELSEC iQ-F])	×	×
PT[*2]	Positioning control parameters	Decimal	☞ Page 1486 Setting virtual word devices for servo amplifiers ([MELSEC iQ-F])	×	×
PL[*2*6]	Motor extension parameter Linear servo motor/DD motor setting parameter	Decimal	☞ Page 1486 Setting virtual word devices for servo amplifiers ([MELSEC iQ-F])	×	×
PN[*2]	Network setting parameters	Decimal	☞ Page 1486 Setting virtual word devices for servo amplifiers ([MELSEC iQ-F])	×	×
PVS[*2*7]	Position extension parameter	Decimal	☞ Page 1486 Setting virtual word devices for servo amplifiers ([MELSEC iQ-F])	×	×
ST[*2]	Status display	Decimal	☞ Page 1486 Setting virtual word devices for servo amplifiers ([MELSEC iQ-F])	×	×
PE[*2]	Extension setting No.2 parameter	Decimal	☞ Page 1486 Setting virtual word devices for servo amplifiers ([MELSEC iQ-F])	×	×
PF[*2]	Extension setting No.3 parameter	Decimal	☞ Page 1486 Setting virtual word devices for servo amplifiers ([MELSEC iQ-F])	×	×

Device name		Device No. representation	Setting range	Specifications of EG devices*1	
				Assignment to EG devices	Access using a client
NPA*2	Network basic parameter	Decimal	☞ Page 1486 Setting virtual word devices for servo amplifiers ([MELSEC iQ-F])	×	×
ALM*2	Alarm (current alarm J4A extend)	Decimal	☞ Page 1486 Setting virtual word devices for servo amplifiers ([MELSEC iQ-F])	×	×
ALM*2	Alarm (alarm history J4A extend)	Decimal	☞ Page 1486 Setting virtual word devices for servo amplifiers ([MELSEC iQ-F])	×	×
POS*2	Point table (position)	Decimal	☞ Page 1486 Setting virtual word devices for servo amplifiers ([MELSEC iQ-F])	×	×
SPD*2	Point table (speed)	Decimal	☞ Page 1486 Setting virtual word devices for servo amplifiers ([MELSEC iQ-F])	×	×
ACT*2	Point table (acceleration time constant)	Decimal	☞ Page 1486 Setting virtual word devices for servo amplifiers ([MELSEC iQ-F])	×	×
DCT*2	Point table (deceleration time constant)	Decimal	☞ Page 1486 Setting virtual word devices for servo amplifiers ([MELSEC iQ-F])	×	×
DWL*2	Point table (dwell)	Decimal	☞ Page 1486 Setting virtual word devices for servo amplifiers ([MELSEC iQ-F])	×	×
AUX*2	Point table (auxiliary function)	Decimal	☞ Page 1486 Setting virtual word devices for servo amplifiers ([MELSEC iQ-F])	×	×
MCD*2	Point table (M code)	Decimal	☞ Page 1486 Setting virtual word devices for servo amplifiers ([MELSEC iQ-F])	×	×
MD*2	Machine diagnosis data	Decimal	☞ Page 1486 Setting virtual word devices for servo amplifiers ([MELSEC iQ-F])	×	×
GFDS*2	Gear failure diagnosis data	Decimal	☞ Page 1486 Setting virtual word devices for servo amplifiers ([MELSEC iQ-F])	×	×
ECCDS*2	Encoder communication circuit diagnosis data	Decimal	☞ Page 1486 Setting virtual word devices for servo amplifiers ([MELSEC iQ-F])	×	×
OTS*2	One-touch tuning data	Decimal	☞ Page 1486 Setting virtual word devices for servo amplifiers ([MELSEC iQ-F])	×	×
DI*2	External input signal	Decimal	☞ Page 1486 Setting virtual word devices for servo amplifiers ([MELSEC iQ-F])	×	×
DO*2	External output signal	Decimal	☞ Page 1486 Setting virtual word devices for servo amplifiers ([MELSEC iQ-F])	×	×

*1 For the devices assigned to EG devices (gateway devices) and the compatible clients, refer to the following.
📖GT Designer3 (GOT2000) Screen Design Manual

*2 Virtual servo amplifier device
For the details, refer to the following.
☞ Page 1493 Virtual servo amplifier devices ([MELSEC iQ-F])

*3 The target device of the host station can be monitored only.
Monitoring the target device of any other station causes a system error.

*4 Available for the file register of block No. switched with the RSET instruction.

*5 Only the intelligent function module on the station connected to GOT can be specified.
Set the buffer memory within the address range of the buffer memory existing in the intelligent function module.

*6 The device name depends on the servo amplifier.
MR-J5-G(-RJ) or MR-J5W□-G: Motor extension parameter
Other than MR-J5-G(-RJ) or MR-J5W□-G: Linear servo motor/DD motor setting parameter

*7 PVS is a virtual device corresponding to the servo parameter (PV) of MR-J5-G(-RJ), MR-J5W □ -G, and MR-JET-G.
Use the virtual device (PVS) to read/write data from/to the servo parameter (PV).

Setting virtual word devices for servo amplifiers ([MELSEC iQ-F])

For virtual servo amplifier devices, the notation differs according to the connection type between the GOT and the servo amplifier.

Select one of the following according to the control type in the device setting dialog.

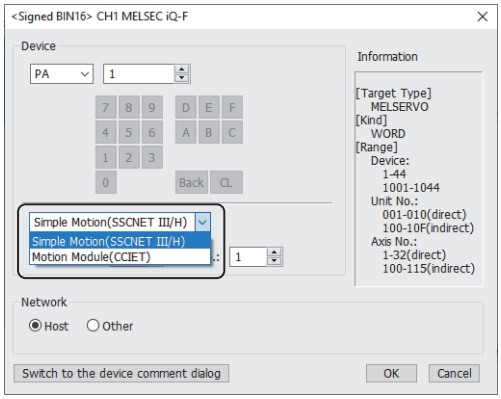

Item	Description
[Simple Motion(SSCNET III/H)]	Connection through a Simple Motion module • [Unit No.]: Set the first 2 digits of the 3-digit number that represents the start I/O number of the Simple Motion module. • [Axis No.]: Set the axis number to be monitored.
[Motion Module(CCIET)]	Select this item to connect the GOT through a Motion module (FX5-nSSC-G). After the selection, set a device that enables axis designation to display the following item. • [Axis Designation]: Set the axis to be monitored.

The following shows the notation and setting range of virtual devices.

Device name	Device notation and setting range		Notation example
PA	[Simple Motion(SSCNET III/H)]	U(Unit No.)-A(Axis No.)-PA(Device) • Unit No. (hexadecimal): 01 to FF (direct), 100 to 10F (indirect) • Axis No. (decimal): 1 to 32 (direct), 100 to 115 (indirect) • Device (decimal): 1 to 44, 1001 to 1044	U10-A32-PA1
	[Motion Module(CCIET)]	AA(Axis designation)-PA(Device) • Axis designation (decimal): 1 to 3 (direct), 100 to 115 (indirect) • Device (decimal): 1 to 44, 1001 to 1044	AA3-PA1
PB	[Simple Motion(SSCNET III/H)]	U(Unit No.)-A(Axis No.)-PB(Device) • Unit No. (hexadecimal): 01 to FF (direct), 100 to 10F (indirect) • Axis No. (decimal): 1 to 32 (direct), 100 to 115 (indirect) • Device (decimal): 1 to 92, 1001 to 1092	U10-A32-PB1
	[Motion Module(CCIET)]	AA(Axis designation)-PB(Device) • Axis designation (decimal): 1 to 3 (direct), 100 to 115 (indirect) • Device (decimal): 1 to 92, 1001 to 1092	AA3-PB1
PC	[Simple Motion(SSCNET III/H)]	U(Unit No.)-A(Axis No.)-PC(Device) • Unit No. (hexadecimal): 01 to FF (direct), 100 to 10F (indirect) • Axis No. (decimal): 1 to 32 (direct), 100 to 115 (indirect) • Device (decimal): 1 to 90, 1001 to 1090	U10-A32-PC1
	[Motion Module(CCIET)]	AA(Axis designation)-PC(Device) • Axis designation (decimal): 1 to 3 (direct), 100 to 115 (indirect) • Device (decimal): 1 to 90, 1001 to 1090	AA3-PC1
PD	[Simple Motion(SSCNET III/H)]	U(Unit No.)-A(Axis No.)-PD(Device) • Unit No. (hexadecimal): 01 to FF (direct), 100 to 10F (indirect) • Axis No. (decimal): 1 to 32 (direct), 100 to 115 (indirect) • Device (decimal): 1 to 72, 1001 to 1072	U10-A32-PD1
	[Motion Module(CCIET)]	AA(Axis designation)-PD(Device) • Axis designation (decimal): 1 to 3 (direct), 100 to 115 (indirect) • Device (decimal): 1 to 72, 1001 to 1072	AA3-PD1
PO	[Motion Module(CCIET)]	AA(Axis designation)-PO(Device) • Axis designation (decimal): 1 to 3 (direct), 100 to 115 (indirect) • Device (decimal): 1 to 2, 1001 to 1002	AA3-PO1

Device name	Device notation and setting range		Notation example
PS	[Motion Module(CCIET)]	AA(Axis designation)-PS(Device) • Axis designation (decimal): 1 to 3 (direct), 100 to 115 (indirect) • Device (decimal): 1 to 99, 1001 to 1099	AA3-PS1
PU	[Motion Module(CCIET)]	AA(Axis designation)-PU(Device) • Axis designation (decimal): 1 to 3 (direct), 100 to 115 (indirect) • Device (decimal): 1 to 44, 1001 to 1044	AA3-PU1
PT	[Motion Module(CCIET)]	AA(Axis designation)-PT(Device) • Axis designation (decimal): 1 to 3 (direct), 100 to 115 (indirect) • Device (decimal): 1 to 90, 1001 to 1090	AA3-PT1
PL	[Simple Motion(SSCNET III/H)]	U(Unit No.)-A(Axis No.)-PL(Device) • Unit No. (hexadecimal): 01 to FF (direct), 100 to 10F (indirect) • Axis No. (decimal): 1 to 32 (direct), 100 to 115 (indirect) • Device (decimal): 1 to 72, 1001 to 1072	U10-A32-PL1
	[Motion Module(CCIET)]	AA(Axis designation)-PL(Device) • Axis designation (decimal): 1 to 3 (direct), 100 to 115 (indirect) • Device (decimal): 1 to 72, 1001 to 1072	AA3-PL1
PN	[Motion Module(CCIET)]	AA(Axis designation)-PN(Device) • Axis designation (decimal): 1 to 3 (direct), 100 to 115 (indirect) • Device (decimal): 1 to 32, 1001 to 1032	AA3-PN1
PVS	[Motion Module(CCIET)]	AA(Axis designation)-PVS(Device) • Axis designation (decimal): 1 to 3 (direct), 100 to 115 (indirect) • Device (decimal): 1 to 32, 1001 to 1032	AA3-PVS1
ST	[Simple Motion(SSCNET III/H)]	U(Unit No.)-A(Axis No.)-ST(Device) • Unit No. (hexadecimal): 01 to FF (direct), 100 to 10F (indirect) • Axis No. (decimal): 1 to 32 (direct), 100 to 115 (indirect) • Device (decimal): 0 to 48	U10-A32-ST0
	[Motion Module(CCIET)]	AA(Axis designation)-ST(Device) • Axis designation (decimal): 1 to 3 (direct), 100 to 115 (indirect) • Device (decimal): 0 to 48	AA3-ST0
PE	[Simple Motion(SSCNET III/H)]	U(Unit No.)-A(Axis No.)-PE(Device) • Unit No. (hexadecimal): 01 to FF (direct), 100 to 10F (indirect) • Axis No. (decimal): 1 to 32 (direct), 100 to 115 (indirect) • Device (decimal): 1 to 88, 1001 to 1088	U10-A32-PE1
	[Motion Module(CCIET)]	AA(Axis designation)-PE(Device) • Axis designation (decimal): 1 to 3 (direct), 100 to 115 (indirect) • Device (decimal): 1 to 88, 1001 to 1088	AA3-PE1
PF	[Simple Motion(SSCNET III/H)]	U(Unit No.)-A(Axis No.)-PF(Device) • Unit No. (hexadecimal): 01 to FF (direct), 100 to 10F (indirect) • Axis No. (decimal): 1 to 32 (direct), 100 to 115 (indirect) • Device (decimal): 1 to 99, 1001 to 1099	U10-A32-PF1
	[Motion Module(CCIET)]	AA(Axis designation)-PF(Device) • Axis designation (decimal): 1 to 3 (direct), 100 to 115 (indirect) • Device (decimal): 1 to 99, 1001 to 1099	AA3-PF1
NPA	[Motion Module(CCIET)]	NPA(Device) • Device (decimal): 1 to 12, 2001 to 2032	NPA1
ALM	[Simple Motion(SSCNET III/H)]	U(Unit No.)-A(Axis No.)-ALM(Device) • Unit No. (hexadecimal): 01 to FF (direct), 100 to 10F (indirect) • Axis No. (decimal): 1 to 32 (direct), 100 to 115 (indirect) • Device (decimal): 0 to 2, 11 to 59, 200 to 215, 220 to 235, 240 to 255, 260 to 275, 280 to 295, 300 to 315	U10-A32-ALM0
	[Motion Module(CCIET)]	AA(Axis designation)-ALM(Device) • Axis designation (decimal): 1 to 3 (direct), 100 to 115 (indirect) • Device (decimal): 0 to 2, 11 to 59, 200 to 215, 220 to 235, 240 to 255, 260 to 275, 280 to 295, 300 to 315	AA3-ALM0
POS	[Motion Module(CCIET)]	AA(Axis designation)-POS(Device) • Axis designation (decimal): 1 to 3 (direct), 100 to 115 (indirect) • Device (decimal): 1 to 255, 1001 to 1255	AA3-POS1
SPD	[Motion Module(CCIET)]	AA(Axis designation)-SPD(Device) • Axis designation (decimal): 1 to 3 (direct), 100 to 115 (indirect) • Device (decimal): 1 to 255, 1001 to 1255	AA3-SPD1
ACT	[Motion Module(CCIET)]	AA(Axis designation)-ACT(Device) • Axis designation (decimal): 1 to 3 (direct), 100 to 115 (indirect) • Device (decimal): 1 to 255, 1001 to 1255	AA3-ACT1

Device name	Device notation and setting range		Notation example
DCT	[Motion Module(CCIET)]	AA(Axis designation)-DCT(Device) • Axis designation (decimal): 1 to 3 (direct), 100 to 115 (indirect) • Device (decimal): 1 to 255, 1001 to 1255	AA3-DCT1
DWL	[Motion Module(CCIET)]	AA(Axis designation)-DWL(Device) • Axis designation (decimal): 1 to 3 (direct), 100 to 115 (indirect) • Device (decimal): 1 to 255, 1001 to 1255	AA3-DWL1
AUX	[Motion Module(CCIET)]	AA(Axis designation)-AUX(Device) • Axis designation (decimal): 1 to 3 (direct), 100 to 115 (indirect) • Device (decimal): 1 to 255, 1001 to 1255	AA3-AUX1
MCD	[Motion Module(CCIET)]	AA(Axis designation)-MCD(Device) • Axis designation (decimal): 1 to 3 (direct), 100 to 115 (indirect) • Device (decimal): 1 to 255, 1001 to 1255	AA3-MCD1
MD	[Simple Motion(SSCNET III/H)]	U(Unit No.)-A(Axis No.)-MD(Device) • Unit No. (hexadecimal): 01 to FF (direct), 100 to 10F (indirect) • Axis No. (decimal): 1 to 32 (direct), 100 to 115 (indirect) • Device (decimal): 0 to 21	U10-A32-MD0
	[Motion Module(CCIET)]	AA(Axis designation)-MD(Device) • Axis designation (decimal): 1 to 3 (direct), 100 to 115 (indirect) • Device (decimal): 0 to 21	AA3-MD0
GFDS	[Motion Module(CCIET)]	AA(Axis designation)-GFDS(Device) • Axis designation (decimal): 1 to 3 (direct), 100 to 115 (indirect) • Device (decimal): 0 to 5	AA3-GFDS0
ECCDS	[Motion Module(CCIET)]	AA(Axis designation)-ECCDS(Device) • Axis designation (decimal): 1 to 3 (direct), 100 to 115 (indirect) • Device (decimal): 0 to 5	AA3-ECCDS0
OTS	[Simple Motion(SSCNET III/H)]	U(Unit No.)-A(Axis No.)-OTS(Device) • Unit No. (hexadecimal): 01 to FF (direct), 100 to 10F (indirect) • Axis No. (decimal): 1 to 32 (direct), 100 to 115 (indirect) • Device (decimal): 0 to 5, 3000	U10-A32-OTS0
	[Motion Module(CCIET)]	AA(Axis designation)-OTS(Device) • Axis designation (decimal): 1 to 3 (direct), 100 to 115 (indirect) • Device (decimal): 0 to 5, 3000	AA3-OTS0
DI	[Simple Motion(SSCNET III/H)]	U(Unit No.)-A(Axis No.)-DI(Device) • Unit No. (hexadecimal): 01 to FF (direct), 100 to 10F (indirect) • Axis No. (decimal): 1 to 32 (direct), 100 to 115 (indirect) • Device (decimal): 0 to 6	U10-A32-DI0
	[Motion Module(CCIET)]	AA(Axis designation)-DI(Device) • Axis designation (decimal): 1 to 3 (direct), 100 to 115 (indirect) • Device (decimal): 0 to 6	AA3-DI0
DO	[Simple Motion(SSCNET III/H)]	U(Unit No.)-A(Axis No.)-DO(Device) • Unit No. (hexadecimal): 01 to FF (direct), 100 to 10F (indirect) • Axis No. (decimal): 1 to 32 (direct), 100 to 115 (indirect) • Device (decimal): 0 to 4	U10-A32-DO0
	[Motion Module(CCIET)]	AA(Axis designation)-DO(Device) • Axis designation (decimal): 1 to 3 (direct), 100 to 115 (indirect) • Device (decimal): 0 to 4	AA3-DO0

For indirect specification of a module or axis number, refer to the following.

☞ Page 1398 Indirect specification of a module number ([MELSEC iQ-R, RnMT/NC/RT, CR800-D], [MELSEC iQ-R, RnMT/RT, CR800-D])

☞ Page 1399 Indirect specification of an axis number or axis designation ([MELSEC iQ-R, RnMT/NC/RT, CR800-D], [MELSEC iQ-R, RnMT/RT, CR800-D])

Availability of writing/reading data to/from word devices ([MELSEC iQ-F])

The following shows the availability of writing/reading data to/from word devices by device type.

R/W: Both read and write

R/-: Read only

-/W: Write only

-/-: No read/write access

Device name	Device type			
	Word (16 bits)	Double-word (32 bits)	Quad-word (64 bits)	Bit of word data
TN	R/W	R/W	-/-	-/-
CN	R/W	R/W	-/-	-/-
SN	R/W	R/W	-/-	-/-
D	R/W	R/W	R/W	R/W
SD	R/W	R/W	R/W	R/W
W	R/W	R/W	R/W	R/W
SW	R/W	R/W	-/-	R/W
R	R/W	R/W	R/W	R/W
Z	R/W	R/W	-/-	-/-
G	R/W	R/W	R/W	R/W
Ww	R/W	R/W	R/W	R/W
Wr	R/W	R/W	R/W	R/W
PA	R/W	R/W	-/-	-/-
PB	R/W	R/W	-/-	-/-
PC	R/W	R/W	-/-	-/-
PD	R/W	R/W	-/-	-/-
PO	R/W	R/W	-/-	-/-
PS	R/W	R/W	-/-	-/-
PU	R/W	R/W	-/-	-/-
PT	R/W	R/W	-/-	-/-
PL	R/W	R/W	-/-	-/-
PN	R/W	R/W	-/-	-/-
PVS	R/W	R/W	-/-	-/-
ST	R/-	R/-	-/-	-/-
PE	R/W	R/W	-/-	-/-
PF	R/W	R/W	-/-	-/-
NPA	R/W	R/W	-/-	-/-
ALM	R/-	R/-	-/-	-/-
POS	R/W	R/W	-/-	-/-
SPD	R/W	R/W	-/-	-/-
ACT	R/W	R/W	-/-	-/-
DCT	R/W	R/W	-/-	-/-
DWL	R/W	R/W	-/-	-/-
AUX	R/W	R/W	-/-	-/-
MCD	R/W	R/W	-/-	-/-
MD	R/-	R/-	-/-	-/-
GFDS	R/-	R/-	-/-	-/-
ECCDS	R/-	R/-	-/-	-/-
OTS	R/-	R/-	-/-	-/-
DI	R/-	R/W	-/-	-/-
DO	R/-	R/-	-/-	-/-

Monitoring-supported double-word devices ([MELSEC iQ-F])

The following table shows monitoring-supported double-word devices.

To check whether writing/reading data to/from each device is available, refer to the following.

☞ Page 1493 Availability of writing/reading data to/from double-word devices ([MELSEC iQ-F])

○: Available

×: Not available

Device name		Device No. representation	Setting range	Specifications of EG devices*1	
				Assignment to EG devices	Access using a client
LCN	Long counter current value	Decimal	0 to 1023	×	×
LZ	Index register (32 bits)	Decimal	0 to 11	×	×
ALD*2	Life diagnosis	Decimal	☞ Page 1491 Setting virtual double-word devices for servo amplifiers ([MELSEC iQ-F])	×	×
TMI*2	Input signal for test operation (for test operation)	Decimal	☞ Page 1491 Setting virtual double-word devices for servo amplifiers ([MELSEC iQ-F])	×	×
TMO*2	Forced output of signal pin (for test operation)	Decimal	☞ Page 1491 Setting virtual double-word devices for servo amplifiers ([MELSEC iQ-F])	×	×
TMD*2	Set data (for test operation)	Decimal	☞ Page 1491 Setting virtual double-word devices for servo amplifiers ([MELSEC iQ-F])	×	×

*1 For the devices assigned to EG devices (gateway devices) and the compatible clients, refer to the following.
📖GT Designer3 (GOT2000) Screen Design Manual

*2 Virtual servo amplifier device
For the details, refer to the following.
☞ Page 1493 Virtual servo amplifier devices ([MELSEC iQ-F])

Setting virtual double-word devices for servo amplifiers ([MELSEC iQ-F])

For virtual servo amplifier devices, the notation differs according to the connection type between the GOT and the servo amplifier.

Select one of the following according to the control type in the device setting dialog.

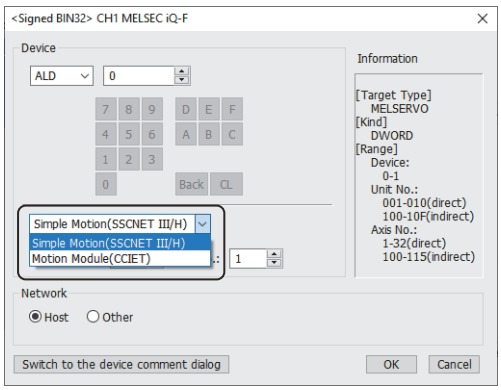

Item	Description
[Simple Motion(SSCNET III/H)]	Connection through a Simple Motion module • [Unit No.]: Set the first 2 digits of the 3-digit number that represents the start I/O number of the Simple Motion module. • [Axis No.]: Set the axis number to be monitored.
[Motion Module(CCIET)]	Select this item to connect the GOT through a Motion module (FX5-nSSC-G). After the selection, set a device that enables axis designation to display the following item. • [Axis Designation]: Set the axis to be monitored.

The following shows the notation and setting range of virtual devices.

Device name	Device notation and setting range		Notation example
ALD	[Simple Motion(SSCNET III/H)]	U(Unit No.)-A(Axis No.)-ALD(Device) • Unit No. (hexadecimal): 01 to FF (direct), 100 to 10F (indirect) • Axis No. (decimal): 1 to 32 (direct), 100 to 115 (indirect) • Device (decimal): 0 to 1	U10-A32-ALD0
	[Motion Module(CCIET)]	AA(Axis designation)-ALD(Device) • Axis designation (decimal): 1 to 3 (direct), 100 to 115 (indirect) • Device (decimal): 0 to 1	AA3-ALD0
TMI	[Simple Motion(SSCNET III/H)]	U(Unit No.)-A(Axis No.)-TMI(Device) • Unit No. (hexadecimal): 01 to FF (direct), 100 to 10F (indirect) • Axis No. (decimal): 1 to 32 (direct), 100 to 115 (indirect) • Device (decimal): 0 to 2	U10-A32-TMI0
	[Motion Module(CCIET)]	AA(Axis designation)-TMI(Device) • Axis designation (decimal): 1 to 3 (direct), 100 to 115 (indirect) • Device (decimal): 0 to 2	AA3-TMI0
TMO	[Simple Motion(SSCNET III/H)]	U(Unit No.)-A(Axis No.)-TMO(Device) • Unit No. (hexadecimal): 01 to FF (direct), 100 to 10F (indirect) • Axis No. (decimal): 1 to 32 (direct), 100 to 115 (indirect) • Device (decimal): 0	U10-A32-TMO0
	[Motion Module(CCIET)]	AA(Axis designation)-TMO(Device) • Axis designation (decimal): 1 to 3 (direct), 100 to 115 (indirect) • Device (decimal): 0	AA3-TMO0
TMD	[Simple Motion(SSCNET III/H)]	U(Unit No.)-A(Axis No.)-TMD(Device) • Unit No. (hexadecimal): 01 to FF (direct), 100 to 10F (indirect) • Axis No. (decimal): 1 to 32 (direct), 100 to 115 (indirect) • Device (decimal): 0 to 1, 3	U10-A32-TMD0
	[Motion Module(CCIET)]	AA(Axis designation)-TMD(Device) • Axis designation (decimal): 1 to 3 (direct), 100 to 115 (indirect) • Device (decimal): 0 to 1, 3	AA3-TMD0

For indirect specification of a module or axis number, refer to the following.

☞ Page 1398 Indirect specification of a module number ([MELSEC iQ-R, RnMT/NC/RT, CR800-D], [MELSEC iQ-R, RnMT/RT, CR800-D])

☞ Page 1399 Indirect specification of an axis number or axis designation ([MELSEC iQ-R, RnMT/NC/RT, CR800-D], [MELSEC iQ-R, RnMT/RT, CR800-D])

Availability of writing/reading data to/from double-word devices ([MELSEC iQ-F])

The following shows the availability of writing/reading data to/from double-word devices by device type.

R/W: Both read and write

R/-: Read only

-/W: Write only

-/-: No read/write access

Device name	Device type			
	Word (16 bits)	Double-word (32 bits)	Quad-word (64 bits)	Bit of double-word data
LCN	-/-	R/W	-/-	-/-
LZ	-/-	R/W	-/-	-/-
ALD	-/-	R/-	-/-	-/-
TMI	-/-	-/W	-/-	-/-
TMO	-/-	-/W	-/-	-/-
TMD	-/-	-/W	-/-	-/-

Virtual servo amplifier devices ([MELSEC iQ-F])

The following shows the correspondence between the virtual devices used in the GOT and the servo amplifier data.

Virtual device name	Reference
SP	☞ Page 1418 Servo amplifier request ([MELSEC iQ-R, RnMT/NC/RT, CR800-D], [MELSEC iQ-R, RnMT/RT, CR800-D])
OM	☞ Page 1418 Operation mode selection ([MELSEC iQ-R, RnMT/NC/RT, CR800-D], [MELSEC iQ-R, RnMT/RT, CR800-D])
TMB	☞ Page 1419 Instruction demand (for test operation) ([MELSEC iQ-R, RnMT/NC/RT, CR800-D], [MELSEC iQ-R, RnMT/RT, CR800-D])
OTI	☞ Page 1419 One-touch tuning instruction ([MELSEC iQ-R, RnMT/NC/RT, CR800-D], [MELSEC iQ-R, RnMT/RT, CR800-D])
GFDI	☞ Page 1420 Gear failure diagnosis instruction ([MELSEC iQ-R, RnMT/NC/RT, CR800-D], [MELSEC iQ-R, RnMT/RT, CR800-D])
ECCDI	☞ Page 1420 Encoder communication circuit diagnosis instruction ([MELSEC iQ-R, RnMT/NC/RT, CR800-D], [MELSEC iQ-R, RnMT/RT, CR800-D])
PA	☞ Page 1421 Basic parameter ([MELSEC iQ-R, RnMT/NC/RT, CR800-D], [MELSEC iQ-R, RnMT/RT, CR800-D])
PB	☞ Page 1423 Gain filter parameter ([MELSEC iQ-R, RnMT/NC/RT, CR800-D], [MELSEC iQ-R, RnMT/RT, CR800-D])
PC	☞ Page 1427 Extension setting parameter ([MELSEC iQ-R, RnMT/NC/RT, CR800-D], [MELSEC iQ-R, RnMT/RT, CR800-D])
PD	☞ Page 1430 I/O setting parameter ([MELSEC iQ-R, RnMT/NC/RT, CR800-D], [MELSEC iQ-R, RnMT/RT, CR800-D])
PO	☞ Page 1432 Option unit parameter ([MELSEC iQ-R, RnMT/NC/RT, CR800-D], [MELSEC iQ-R, RnMT/RT, CR800-D])
PS	☞ Page 1432 Special parameter ([MELSEC iQ-R, RnMT/NC/RT, CR800-D], [MELSEC iQ-R, RnMT/RT, CR800-D])
PU	☞ Page 1432 Multi encoder parameter ([MELSEC iQ-R, RnMT/NC/RT, CR800-D], [MELSEC iQ-R, RnMT/RT, CR800-D])
PT	☞ Page 1433 Positioning control parameter ([MELSEC iQ-R, RnMT/NC/RT, CR800-D], [MELSEC iQ-R, RnMT/RT, CR800-D])
PL	☞ Page 1436 Motor extension parameter, linear servo motor/DD motor setting parameter ([MELSEC iQ-R, RnMT/NC/RT, CR800-D], [MELSEC iQ-R, RnMT/RT, CR800-D])
PN	☞ Page 1437 Network setting parameter ([MELSEC iQ-R, RnMT/NC/RT, CR800-D], [MELSEC iQ-R, RnMT/RT, CR800-D])
PVS	☞ Page 1438 Position extension parameter ([MELSEC iQ-R, RnMT/NC/RT, CR800-D], [MELSEC iQ-R, RnMT/RT, CR800-D])
ST	☞ Page 1439 Status display ([MELSEC iQ-R, RnMT/NC/RT, CR800-D], [MELSEC iQ-R, RnMT/RT, CR800-D])
PE	☞ Page 1441 Extension setting No.2 parameter ([MELSEC iQ-R, RnMT/NC/RT, CR800-D], [MELSEC iQ-R, RnMT/RT, CR800-D])
PF	☞ Page 1443 Extension setting No.3 parameter ([MELSEC iQ-R, RnMT/NC/RT, CR800-D], [MELSEC iQ-R, RnMT/RT, CR800-D])
NPA	☞ Page 1446 Network basic parameter ([MELSEC iQ-R, RnMT/NC/RT, CR800-D], [MELSEC iQ-R, RnMT/RT, CR800-D])
ALM	☞ Page 1447 Alarm ([MELSEC iQ-R, RnMT/NC/RT, CR800-D], [MELSEC iQ-R, RnMT/RT, CR800-D])
POS	☞ Page 1456 Point table (position) ([MELSEC iQ-R, RnMT/NC/RT, CR800-D], [MELSEC iQ-R, RnMT/RT, CR800-D])
SPD	☞ Page 1456 Point table (speed) ([MELSEC iQ-R, RnMT/NC/RT, CR800-D], [MELSEC iQ-R, RnMT/RT, CR800-D])
ACT	☞ Page 1457 Point table (acceleration time constant) ([MELSEC iQ-R, RnMT/NC/RT, CR800-D], [MELSEC iQ-R, RnMT/RT, CR800-D])
DCT	☞ Page 1457 Point table (deceleration time constant) ([MELSEC iQ-R, RnMT/NC/RT, CR800-D], [MELSEC iQ-R, RnMT/RT, CR800-D])
DWL	☞ Page 1457 Point table (dwell) ([MELSEC iQ-R, RnMT/NC/RT, CR800-D], [MELSEC iQ-R, RnMT/RT, CR800-D])
AUX	☞ Page 1458 Point table (auxiliary function) ([MELSEC iQ-R, RnMT/NC/RT, CR800-D], [MELSEC iQ-R, RnMT/RT, CR800-D])
MCD	☞ Page 1458 Point table (M code) ([MELSEC iQ-R, RnMT/NC/RT, CR800-D], [MELSEC iQ-R, RnMT/RT, CR800-D])

Virtual device name	Reference
MD	☞ Page 1459 Machine diagnosis data ([MELSEC iQ-R, RnMT/NC/RT, CR800-D], [MELSEC iQ-R, RnMT/RT, CR800-D])
GFDS	☞ Page 1460 Gear failure diagnosis data ([MELSEC iQ-R, RnMT/NC/RT, CR800-D], [MELSEC iQ-R, RnMT/RT, CR800-D])
ECCDS	☞ Page 1461 Encoder communication circuit diagnosis data ([MELSEC iQ-R, RnMT/NC/RT, CR800-D], [MELSEC iQ-R, RnMT/RT, CR800-D])
OTS	☞ Page 1461 One-touch tuning data ([MELSEC iQ-R, RnMT/NC/RT, CR800-D], [MELSEC iQ-R, RnMT/RT, CR800-D])
DI	☞ Page 1462 External input signal in MR-J5-G(-RJ) and MR-J5W□-G ([MELSEC iQ-R, RnMT/NC/RT, CR800-D], [MELSEC iQ-R, RnMT/RT, CR800-D])
DO	☞ Page 1464 External output signal in MR-J5-G(-RJ) and MR-J5W□-G ([MELSEC iQ-R, RnMT/NC/RT, CR800-D], [MELSEC iQ-R, RnMT/RT, CR800-D])
ALD	☞ Page 1466 Life Diagnosis ([MELSEC iQ-R, RnMT/NC/RT, CR800-D], [MELSEC iQ-R, RnMT/RT, CR800-D])
TMI	☞ Page 1466 Input signal for test operation (for test operation) ([MELSEC iQ-R, RnMT/NC/RT, CR800-D], [MELSEC iQ-R, RnMT/RT, CR800-D])
TMO	☞ Page 1467 Forced output of signal pin (for test operation) ([MELSEC iQ-R, RnMT/NC/RT, CR800-D], [MELSEC iQ-R, RnMT/RT, CR800-D])
TMD	☞ Page 1467 Set data (for test operation) ([MELSEC iQ-R, RnMT/NC/RT, CR800-D], [MELSEC iQ-R, RnMT/RT, CR800-D])

Precautions for virtual servo amplifier devices ([MELSEC iQ-F])

For the precautions for virtual servo amplifier devices, refer to the following.

☞ Page 1468 Precautions for virtual servo amplifier devices ([MELSEC iQ-R, RnMT/NC/RT, CR800-D], [MELSEC iQ-R, RnMT/RT, CR800-D])

[MELSEC-Q/QS, Q17nD/M/NC/DR/DSR, CRnD-700], [MELSEC-Q, Q17nD/M/DR/DSR, CRnD-700]

GT27 GT25 GT23 GT21 GS25 GS21

Item	Reference
Specifications of bit devices	☞ Page 1496 Monitoring-supported bit devices ([MELSEC-Q/QS, Q17nD/M/NC/DR/DSR, CRnD-700], [MELSEC-Q, Q17nD/M/DR/DSR, CRnD-700])
	☞ Page 1498 Setting virtual bit devices for servo amplifiers ([MELSEC-Q/QS, Q17nD/M/NC/DR/DSR, CRnD-700], [MELSEC-Q, Q17nD/M/DR/DSR, CRnD-700])
	☞ Page 1500 Availability of writing/reading data to/from bit devices ([MELSEC-Q/QS, Q17nD/M/NC/DR/DSR, CRnD-700], [MELSEC-Q, Q17nD/M/DR/DSR, CRnD-700])
Specifications of word devices	☞ Page 1501 Monitoring-supported word devices ([MELSEC-Q/QS, Q17nD/M/NC/DR/DSR, CRnD-700], [MELSEC-Q, Q17nD/M/DR/DSR, CRnD-700])
	☞ Page 1504 Setting virtual word devices for servo amplifiers ([MELSEC-Q/QS, Q17nD/M/NC/DR/DSR, CRnD-700], [MELSEC-Q, Q17nD/M/DR/DSR, CRnD-700])
	☞ Page 1508 Availability of writing/reading data to/from word devices ([MELSEC-Q/QS, Q17nD/M/NC/DR/DSR, CRnD-700], [MELSEC-Q, Q17nD/M/DR/DSR, CRnD-700])
Specifications of double-word devices	☞ Page 1509 Monitoring-supported double-word devices ([MELSEC-Q/QS, Q17nD/M/NC/DR/DSR, CRnD-700], [MELSEC-Q, Q17nD/M/DR/DSR, CRnD-700])
	☞ Page 1510 Setting virtual double-word devices for servo amplifiers ([MELSEC-Q/QS, Q17nD/M/NC/DR/DSR, CRnD-700], [MELSEC-Q, Q17nD/M/DR/DSR, CRnD-700])
	☞ Page 1511 Availability of writing/reading data to/from double-word devices ([MELSEC-Q/QS, Q17nD/M/NC/DR/DSR, CRnD-700], [MELSEC-Q, Q17nD/M/DR/DSR, CRnD-700])
Specifications of virtual servo amplifier devices	☞ Page 1512 Virtual servo amplifier devices ([MELSEC-Q/QS, Q17nD/M/NC/DR/DSR, CRnD-700], [MELSEC-Q, Q17nD/M/DR/DSR, CRnD-700])
	☞ Page 1513 Precautions for virtual servo amplifier devices ([MELSEC-Q/QS, Q17nD/M/NC/DR/DSR, CRnD-700], [MELSEC-Q, Q17nD/M/DR/DSR, CRnD-700])
Specifications of virtual inverter devices	☞ Page 1513 Virtual inverter devices ([MELSEC-Q/QS, Q17nD/M/NC/DR/DSR, CRnD-700], [MELSEC-Q, Q17nD/M/DR/DSR, CRnD-700])

Monitoring-supported bit devices ([MELSEC-Q/QS, Q17nD/M/NC/DR/DSR, CRnD-700], [MELSEC-Q, Q17nD/M/DR/DSR, CRnD-700])

The following table shows monitoring-supported bit devices.

To check whether writing/reading data to/from each device is available, refer to the following.

☞ Page 1500 Availability of writing/reading data to/from bit devices ([MELSEC-Q/QS, Q17nD/M/NC/DR/DSR, CRnD-700], [MELSEC-Q, Q17nD/M/DR/DSR, CRnD-700])

○: Available

×: Not available

Device name		Device No. representation	Setting range	Specifications of EG devices*1	
				Assignment to EG devices	Access using a client
X	Input relay	Hexadecimal	0000 to 3FFF	○	○
Y	Output relay	Hexadecimal	0000 to 3FFF	○	○
B	Link relay	Hexadecimal	00000 to 9FFFF	○	○
M *4	Internal relay	Decimal	0 to 61439	○	○
L	Latch relay	Decimal	0 to 32767	○	○
S	Step relay	Decimal	0 to 32767	○	○
F	Annunciator	Decimal	0 to 32767	○	○
TC *4	Timer coil	Decimal	0 to 32767	○	○ (Not usable as word data)
TT *4	Timer contact	Decimal	0 to 32767	○	○ (Not usable as word data)

Device name		Device No. representation	Setting range	Specifications of EG devices*1	
				Assignment to EG devices	Access using a client
CC *4	Counter coil	Decimal	0 to 32767	○	○ (Not usable as word data)
CT *4	Counter contact	Decimal	0 to 32767	○	○ (Not usable as word data)
SC *4	Retentive timer coil	Decimal	0 to 32767	○	○ (Not usable as word data)
SS *4	Retentive timer contact	Decimal	0 to 32767	○	○ (Not usable as word data)
SB	Link special relay	Hexadecimal	0000 to 7FFF	○	○
SM	Special relay	Decimal	0 to 2255	○	○
RX	Remote input	Hexadecimal	0000 to 3FFF	○	○
RY	Remote output	Hexadecimal	0000 to 3FFF	○	○
LB	Link relay	Hexadecimal	0000 to 7FFF	○	○
SP *2	Servo amplifier request	Decimal	☞ Page 1498 Setting virtual bit devices for servo amplifiers ([MELSEC-Q/QS, Q17nD/M/NC/DR/DSR, CRnD-700], [MELSEC-Q, Q17nD/M/DR/DSR, CRnD-700])	×	×
OM *2	Operation mode selection	Decimal	☞ Page 1498 Setting virtual bit devices for servo amplifiers ([MELSEC-Q/QS, Q17nD/M/NC/DR/DSR, CRnD-700], [MELSEC-Q, Q17nD/M/DR/DSR, CRnD-700])	×	×
TMB *2	Instruction demand (for test operation)	Decimal	☞ Page 1498 Setting virtual bit devices for servo amplifiers ([MELSEC-Q/QS, Q17nD/M/NC/DR/DSR, CRnD-700], [MELSEC-Q, Q17nD/M/DR/DSR, CRnD-700])	×	×
OTI *2	One-touch tuning instruction	Decimal	☞ Page 1498 Setting virtual bit devices for servo amplifiers ([MELSEC-Q/QS, Q17nD/M/NC/DR/DSR, CRnD-700], [MELSEC-Q, Q17nD/M/DR/DSR, CRnD-700])	×	×
IOST *3	I/O terminal monitor	Decimal	0 to 127	×	×
CMD *3	Operation command	Decimal	0 to 63	×	×
GFDI*2	Gear failure diagnosis instruction	Decimal	☞ Page 1498 Setting virtual bit devices for servo amplifiers ([MELSEC-Q/QS, Q17nD/M/NC/DR/DSR, CRnD-700], [MELSEC-Q, Q17nD/M/DR/DSR, CRnD-700])	×	×
ECCDI*2	Encoder communication circuit diagnosis instruction	Decimal	☞ Page 1498 Setting virtual bit devices for servo amplifiers ([MELSEC-Q/QS, Q17nD/M/NC/DR/DSR, CRnD-700], [MELSEC-Q, Q17nD/M/DR/DSR, CRnD-700])	×	×

*1 For the devices assigned to EG devices (gateway devices) and the compatible clients, refer to the following.
📖GT Designer3 (GOT2000) Screen Design Manual

*2 Virtual servo amplifier device
For the details, refer to the following.
☞ Page 1512 Virtual servo amplifier devices ([MELSEC-Q/QS, Q17nD/M/NC/DR/DSR, CRnD-700], [MELSEC-Q, Q17nD/M/DR/DSR, CRnD-700])

*3 Virtual inverter device
For the details, refer to the following.
☞ Page 1513 Virtual inverter devices ([MELSEC-Q/QS, Q17nD/M/NC/DR/DSR, CRnD-700], [MELSEC-Q, Q17nD/M/DR/DSR, CRnD-700])

*4 Do not use the local device set in a MELSEC-Q system.
Doing so disables the correct monitoring.

Setting virtual bit devices for servo amplifiers ([MELSEC-Q/QS, Q17nD/M/NC/DR/DSR, CRnD-700], [MELSEC-Q, Q17nD/M/DR/DSR, CRnD-700])

For virtual servo amplifier devices, the notation differs according to the connection type between the GOT and the servo amplifier.

Select one of the following according to the control type in the device setting dialog.

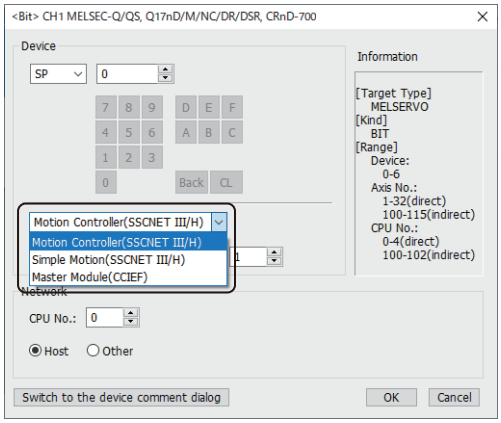

Item	Description
[Motion Controller(SSCNET III/H)]	Select this item to connect the GOT through a Motion controller. The following item is displayed. • [Axis No.]: Set the axis number to be monitored.
[Simple Motion(SSCNET III/H)]	Select this item to connect the GOT through a Simple Motion module (QD77MS). The following item is displayed. • [Unit No.]: Set the first 2 digits of the 3-digit number that represents the start I/O number of the Simple Motion module. • [Axis No.]: Set the axis number to be monitored.
[Master Module(CCIEF)]	Select this item to connect the GOT through the master station on the CC-Link IE Field Network or a Simple Motion module (QD77GF).

The following shows the notation and setting range of virtual devices.

Device name	Device notation and setting range		Notation example
SP	[Motion Controller(SSCNET III/H)]	A(Axis No.)-SP(Device) • Axis No. (decimal): 1 to 32 (direct), 100 to 115 (indirect) • Device (decimal): 0 to 6	A32-SP0
	[Simple Motion(SSCNET III/H)]	U(Unit No.)-A(Axis No.)-SP(Device) • Unit No. (hexadecimal): 00 to FF (direct), 100 to 10F (indirect) • Axis No. (decimal): 1 to 32 (direct), 100 to 115 (indirect) • Device (decimal): 0 to 6	UFF-A32-SP0
	[Master Module(CCIEF)]	SP(Device) • Device (decimal): 0 to 6	SP0
OM	[Motion Controller(SSCNET III/H)]	A(Axis No.)-OM(Device) • Axis No. (decimal): 1 to 32 (direct), 100 to 115 (indirect) • Device (decimal): 0 to 2, 4 to 5	A32-OM0
	[Simple Motion(SSCNET III/H)]	U(Unit No.)-A(Axis No.)-OM(Device) • Unit No. (hexadecimal): 00 to FF (direct), 100 to 10F (indirect) • Axis No. (decimal): 1 to 32 (direct), 100 to 115 (indirect) • Device (decimal): 0 to 2, 4 to 5	UFF-A32-OM0
	[Master Module(CCIEF)]	OM(Device) • Device (decimal): 0 to 2, 4 to 5	OM0
TMB	[Motion Controller(SSCNET III/H)]	A(Axis No.)-TMB(Device) • Axis No. (decimal): 1 to 32 (direct), 100 to 115 (indirect) • Device (decimal): 1 to 6	A32-TMB1
	[Simple Motion(SSCNET III/H)]	U(Unit No.)-A(Axis No.)-TMB(Device) • Unit No. (hexadecimal): 00 to FF (direct), 100 to 10F (indirect) • Axis No. (decimal): 1 to 32 (direct), 100 to 115 (indirect) • Device (decimal): 1 to 6	UFF-A32-TMB1
	[Master Module(CCIEF)]	TMB(Device) • Device (decimal): 1 to 6	TMB1

Device name	Device notation and setting range		Notation example
OTI	[Motion Controller(SSCNET III/H)]	A(Axis No.)-OTI(Device) • Axis No. (decimal): 1 to 32 (direct), 100 to 115 (indirect) • Device (decimal): 0 to 5	A32-OTI0
	[Simple Motion(SSCNET III/H)]	U(Unit No.)-A(Axis No.)-OTI(Device) • Unit No. (hexadecimal): 00 to FF (direct), 100 to 10F (indirect) • Axis No. (decimal): 1 to 32 (direct), 100 to 115 (indirect) • Device (decimal): 0 to 5	UFF-A32-OTI0
	[Master Module(CCIEF)]	OTI(Device) • Device (decimal): 0 to 5	OTI0
GFDI	[Motion Controller(SSCNET III/H)]	A(Axis No.)-GFDI(Device) • Axis No. (decimal): 1 to 32 (direct), 100 to 115 (indirect) • Device (decimal): 0 to 1	A32-GFDI0
	[Simple Motion(SSCNET III/H)]	U(Unit No.)-A(Axis No.)-GFDI(Device) • Unit No. (hexadecimal): 00 to FF (direct), 100 to 10F (indirect) • Axis No. (decimal): 1 to 32 (direct), 100 to 115 (indirect) • Device (decimal): 0 to 1	UFF-A32-GFDI0
ECCDI	[Motion Controller(SSCNET III/H)]	A(Axis No.)-ECCDI(Device) • Axis No. (decimal): 1 to 32 (direct), 100 to 115 (indirect) • Device (decimal): 0 to 1	A32-ECCDI0
	[Simple Motion(SSCNET III/H)]	U(Unit No.)-A(Axis No.)-ECCDI(Device) • Unit No. (hexadecimal): 00 to FF (direct), 100 to 10F (indirect) • Axis No. (decimal): 1 to 32 (direct), 100 to 115 (indirect) • Device (decimal): 0 to 1	UFF-A32-ECCDI0

For indirect specification of a module or axis number, refer to the following.

☞ Page 1398 Indirect specification of a module number ([MELSEC iQ-R, RnMT/NC/RT, CR800-D], [MELSEC iQ-R, RnMT/RT, CR800-D])

☞ Page 1399 Indirect specification of an axis number or axis designation ([MELSEC iQ-R, RnMT/NC/RT, CR800-D], [MELSEC iQ-R, RnMT/RT, CR800-D])

Availability of writing/reading data to/from bit devices ([MELSEC-Q/QS, Q17nD/M/NC/DR/DSR, CRnD-700], [MELSEC-Q, Q17nD/M/DR/DSR, CRnD-700])

The following shows whether writing/reading data to/from bit devices is available by device type.

When the device type is other than the bit type, set the device No. in multiples of 16.

The GOT can only read data from the device when the QS001CPU is used.

To write data to the consecutive devices of a Q172DR(CR750-Q), use the Q172DR(CR750-Q) with firmware version R6b or later.

R/W: Both read and write

R/-: Read only

-/W: Write only

-/-: No read/write access

Device name	Device type				
	Bit	Byte (8 bits)	Word (16 bits)	Double-word (32 bits)	Quad-word (64 bits)
X	R/W	-/-	R/W	R/W	-/-
Y	R/W	-/-	R/W	R/W	-/-
B	R/W	-/-	R/W	R/W	-/-
M	R/W	-/-	R/W	R/W	-/-
L	R/W	-/-	R/W	R/W	-/-
S	R/W	-/-	R/W	R/W	-/-
F	R/W	-/-	R/W	R/W	-/-
TC	R/W	-/-	-/-	-/-	-/-
TT	R/W	-/-	-/-	-/-	-/-
CC	R/W	-/-	-/-	-/-	-/-
CT	R/W	-/-	-/-	-/-	-/-
SC	R/W	-/-	-/-	-/-	-/-
SS	R/W	-/-	-/-	-/-	-/-
SB	R/W	-/-	R/W	R/W	-/-
SM	R/W	-/-	R/W	R/W	-/-
RX	R/W	-/-	R/W	R/W	-/-
RY	R/W	-/-	R/W	R/W	-/-
LB	R/W	-/-	R/W	R/W	-/-
SP	-/W	-/-	-/-	-/-	-/-
OM	-/W	-/-	-/-	-/-	-/-
TMB	-/W	-/-	-/-	-/-	-/-
OTI	-/W	-/-	-/-	-/-	-/-
IOST	R/-	-/-	-/-	-/-	-/-
CMD	-/W	-/-	-/-	-/-	-/-
GFDI	-/W	-/-	-/-	-/-	-/-
ECCDI	-/W	-/-	-/-	-/-	-/-

Monitoring-supported word devices ([MELSEC-Q/QS, Q17nD/M/NC/DR/DSR, CRnD-700], [MELSEC-Q, Q17nD/M/DR/DSR, CRnD-700])

The following table shows monitoring-supported word devices.

To check whether writing/reading data to/from each device is available, refer to the following.

☞ Page 1508 Availability of writing/reading data to/from word devices ([MELSEC-Q/QS, Q17nD/M/NC/DR/DSR, CRnD-700], [MELSEC-Q, Q17nD/M/DR/DSR, CRnD-700])

○: Available

×: Not available

Device name		Device No. representation	Setting range	Specifications of EG devices*1	
				Assignment to EG devices	Access using a client
TN *6	Timer current value	Decimal	0 to 32767	○	○
CN *6	Counter current value	Decimal	0 to 32767	○	○
SN *6	Retentive timer current value	Decimal	0 to 32767	○	○
D *3*5*6	Data register	Decimal	0 to 4910079	○	○
SD	Special register	Decimal	0 to 2255	○	○
W *3*5	Link register	Hexadecimal	000000 to 4AEBFF	○	○
SW	Link special register	Hexadecimal	0000 to 7FFF	○	○
R *3*4	File register	Decimal	0 to 32767	○	○
ER *3*9	Extension file register(Block)	Decimal	ER(R block)-(Device) Notation example: ER255-100 • R block (decimal): 0 to 255 • Device (decimal): 0 to 32767	○	○
ZR *3*5*7*9	Extension file register	Decimal	0 to 4849663	○	○
Z	Index register	Decimal	0 to 19	○	○ (Not usable as bit data)
G *9	Buffer memory (Intelligent function module)	Decimal	U(Unit No.)-G(Device) Notation example: UFF-G100 • Unit No. (hexadecimal): 00 to FF • Device (decimal): 0 to 65535 For the module No., set the first 2 digits of the 3-digit number that represents the start I/O number of the buffer memory for the intelligent function module.	○	○
Ww *8	Remote register	Hexadecimal	0000 to 1FFF	○	○
Wr *8	Remote register	Hexadecimal	0000 to 1FFF	○	○
LW	Link register	Hexadecimal	00000 to 1FFFF	○	○
#	Motion device	Decimal	0 to 12287	○	○
U3E0	Multiple CPU high speed transmission memory	Decimal	U3E0-G(Device) Notation example: U3E0-10000 • Device (decimal): 10000 to 24335	○	○
U3E1	Multiple CPU high speed transmission memory	Decimal	U3E1-G(Device) Notation example: U3E1-10000 • Device (decimal): 10000 to 24335	○	○
U3E2	Multiple CPU high speed transmission memory	Decimal	U3E2-(Device) Notation example: U3E2-10000 • Device (decimal): 10000 to 24335	○	○
U3E3	Multiple CPU high speed transmission memory	Decimal	U3E3-(Device) Notation example: U3E3-10000 • Device (decimal): 10000 to 24335	○	○
PA *2	Basic parameter	Decimal	☞ Page 1504 Setting virtual word devices for servo amplifiers ([MELSEC-Q/QS, Q17nD/M/NC/DR/DSR, CRnD-700], [MELSEC-Q, Q17nD/M/DR/DSR, CRnD-700])	×	×
PB *2	Gain filter parameter	Decimal	☞ Page 1504 Setting virtual word devices for servo amplifiers ([MELSEC-Q/QS, Q17nD/M/NC/DR/DSR, CRnD-700], [MELSEC-Q, Q17nD/M/DR/DSR, CRnD-700])	×	×

Device name		Device No. representation	Setting range	Specifications of EG devices*1	
				Assignment to EG devices	Access using a client
PC *2	Extension setting parameter	Decimal	☞ Page 1504 Setting virtual word devices for servo amplifiers ([MELSEC-Q/QS, Q17nD/M/NC/DR/DSR, CRnD-700], [MELSEC-Q, Q17nD/M/DR/DSR, CRnD-700])	×	×
PD *2	I/O setting parameter	Decimal	☞ Page 1504 Setting virtual word devices for servo amplifiers ([MELSEC-Q/QS, Q17nD/M/NC/DR/DSR, CRnD-700], [MELSEC-Q, Q17nD/M/DR/DSR, CRnD-700])	×	×
PO*2	Option unit parameter	Decimal	☞ Page 1504 Setting virtual word devices for servo amplifiers ([MELSEC-Q/QS, Q17nD/M/NC/DR/DSR, CRnD-700], [MELSEC-Q, Q17nD/M/DR/DSR, CRnD-700])	×	×
PS*2	Special parameter	Decimal	☞ Page 1504 Setting virtual word devices for servo amplifiers ([MELSEC-Q/QS, Q17nD/M/NC/DR/DSR, CRnD-700], [MELSEC-Q, Q17nD/M/DR/DSR, CRnD-700])	×	×
PU*2	Multi encoder parameter	Decimal	☞ Page 1504 Setting virtual word devices for servo amplifiers ([MELSEC-Q/QS, Q17nD/M/NC/DR/DSR, CRnD-700], [MELSEC-Q, Q17nD/M/DR/DSR, CRnD-700])	×	×
PT *2	Positioning control parameter	Decimal	☞ Page 1504 Setting virtual word devices for servo amplifiers ([MELSEC-Q/QS, Q17nD/M/NC/DR/DSR, CRnD-700], [MELSEC-Q, Q17nD/M/DR/DSR, CRnD-700])	×	×
PL*2	Linear servo motor/DD motor setting parameter	Decimal	☞ Page 1504 Setting virtual word devices for servo amplifiers ([MELSEC-Q/QS, Q17nD/M/NC/DR/DSR, CRnD-700], [MELSEC-Q, Q17nD/M/DR/DSR, CRnD-700])	×	×
PN *2	Network setting parameter	Decimal	☞ Page 1504 Setting virtual word devices for servo amplifiers ([MELSEC-Q/QS, Q17nD/M/NC/DR/DSR, CRnD-700], [MELSEC-Q, Q17nD/M/DR/DSR, CRnD-700])	×	×
ST *2	Status display	Decimal	☞ Page 1504 Setting virtual word devices for servo amplifiers ([MELSEC-Q/QS, Q17nD/M/NC/DR/DSR, CRnD-700], [MELSEC-Q, Q17nD/M/DR/DSR, CRnD-700])	×	×
PE *2	Extension setting No.2 parameter	Decimal	☞ Page 1504 Setting virtual word devices for servo amplifiers ([MELSEC-Q/QS, Q17nD/M/NC/DR/DSR, CRnD-700], [MELSEC-Q, Q17nD/M/DR/DSR, CRnD-700])	×	×
PF *2	Extension setting No.3 parameter	Decimal	☞ Page 1504 Setting virtual word devices for servo amplifiers ([MELSEC-Q/QS, Q17nD/M/NC/DR/DSR, CRnD-700], [MELSEC-Q, Q17nD/M/DR/DSR, CRnD-700])	×	×
ALM *2	Alarm (current alarm J4A extend)	Decimal	☞ Page 1504 Setting virtual word devices for servo amplifiers ([MELSEC-Q/QS, Q17nD/M/NC/DR/DSR, CRnD-700], [MELSEC-Q, Q17nD/M/DR/DSR, CRnD-700])	×	×
ALM *2	Alarm (alarm history J4A extend)	Decimal	☞ Page 1504 Setting virtual word devices for servo amplifiers ([MELSEC-Q/QS, Q17nD/M/NC/DR/DSR, CRnD-700], [MELSEC-Q, Q17nD/M/DR/DSR, CRnD-700])	×	×
POS *2	Point table (position)	Decimal	☞ Page 1504 Setting virtual word devices for servo amplifiers ([MELSEC-Q/QS, Q17nD/M/NC/DR/DSR, CRnD-700], [MELSEC-Q, Q17nD/M/DR/DSR, CRnD-700])	×	×
SPD *2	Point table (speed)	Decimal	☞ Page 1504 Setting virtual word devices for servo amplifiers ([MELSEC-Q/QS, Q17nD/M/NC/DR/DSR, CRnD-700], [MELSEC-Q, Q17nD/M/DR/DSR, CRnD-700])	×	×

Device name		Device No. representation	Setting range	Specifications of EG devices*1	
				Assignment to EG devices	Access using a client
ACT *2	Point table (acceleration time constant)	Decimal	☞ Page 1504 Setting virtual word devices for servo amplifiers ([MELSEC-Q/QS, Q17nD/M/NC/DR/DSR, CRnD-700], [MELSEC-Q, Q17nD/M/DR/DSR, CRnD-700])	×	×
DCT *2	Point table (deceleration time constant)	Decimal	☞ Page 1504 Setting virtual word devices for servo amplifiers ([MELSEC-Q/QS, Q17nD/M/NC/DR/DSR, CRnD-700], [MELSEC-Q, Q17nD/M/DR/DSR, CRnD-700])	×	×
DWL *2	Point table (dwell)	Decimal	☞ Page 1504 Setting virtual word devices for servo amplifiers ([MELSEC-Q/QS, Q17nD/M/NC/DR/DSR, CRnD-700], [MELSEC-Q, Q17nD/M/DR/DSR, CRnD-700])	×	×
AUX *2	Point table (auxiliary function)	Decimal	☞ Page 1504 Setting virtual word devices for servo amplifiers ([MELSEC-Q/QS, Q17nD/M/NC/DR/DSR, CRnD-700], [MELSEC-Q, Q17nD/M/DR/DSR, CRnD-700])	×	×
MD *2	Machine diagnosis data	Decimal	☞ Page 1504 Setting virtual word devices for servo amplifiers ([MELSEC-Q/QS, Q17nD/M/NC/DR/DSR, CRnD-700], [MELSEC-Q, Q17nD/M/DR/DSR, CRnD-700])	×	×
GFDS*2	Gear failure diagnosis data	Decimal	☞ Page 1504 Setting virtual word devices for servo amplifiers ([MELSEC-Q/QS, Q17nD/M/NC/DR/DSR, CRnD-700], [MELSEC-Q, Q17nD/M/DR/DSR, CRnD-700])	×	×
ECCDS*2	Encoder communication circuit diagnosis data	Decimal	☞ Page 1504 Setting virtual word devices for servo amplifiers ([MELSEC-Q/QS, Q17nD/M/NC/DR/DSR, CRnD-700], [MELSEC-Q, Q17nD/M/DR/DSR, CRnD-700])	×	×
OTS *2	One-touch tuning data	Decimal	☞ Page 1504 Setting virtual word devices for servo amplifiers ([MELSEC-Q/QS, Q17nD/M/NC/DR/DSR, CRnD-700], [MELSEC-Q, Q17nD/M/DR/DSR, CRnD-700])	×	×
DI *2	External input signal	Decimal	☞ Page 1504 Setting virtual word devices for servo amplifiers ([MELSEC-Q/QS, Q17nD/M/NC/DR/DSR, CRnD-700], [MELSEC-Q, Q17nD/M/DR/DSR, CRnD-700])	×	×
DO *2	External output signal	Decimal	☞ Page 1504 Setting virtual word devices for servo amplifiers ([MELSEC-Q/QS, Q17nD/M/NC/DR/DSR, CRnD-700], [MELSEC-Q, Q17nD/M/DR/DSR, CRnD-700])	×	×

*1 For the devices assigned to EG devices (gateway devices) and the compatible clients, refer to the following.
📖GT Designer3 (GOT2000) Screen Design Manual

*2 Virtual servo amplifier device
For the details, refer to the following.
☞ Page 1512 Virtual servo amplifier devices ([MELSEC-Q/QS, Q17nD/M/NC/DR/DSR, CRnD-700], [MELSEC-Q, Q17nD/M/DR/DSR, CRnD-700])

*3 Do not set a file register by GT Designer3 when executing multiple programs with the file of the file register set at [Use the same file name as the program.] by the PLC parameter of GX Developer.
Otherwise, read or write at GOT will be erroneous.

*4 Available for the file register of block No. switched with the RSET instruction.

*5 Available for the file register of block number of file name switched with the QDRSET instruction.

*6 Do not use the local device set in a MELSEC-Q system.
Doing so disables the correct monitoring.

*7 ZR1042432 to ZR4184063 cannot be used for GT SoftGOT2000.

*8 Not available to GT21.

*9 Available to GT21 when a Universal model QCPU is connected only.

A

Setting virtual word devices for servo amplifiers ([MELSEC-Q/QS, Q17nD/M/NC/DR/DSR, CRnD-700], [MELSEC-Q, Q17nD/M/DR/DSR, CRnD-700])

For virtual servo amplifier devices, the notation differs according to the connection type between the GOT and the servo amplifier.

Select one of the following according to the control type in the device setting dialog.

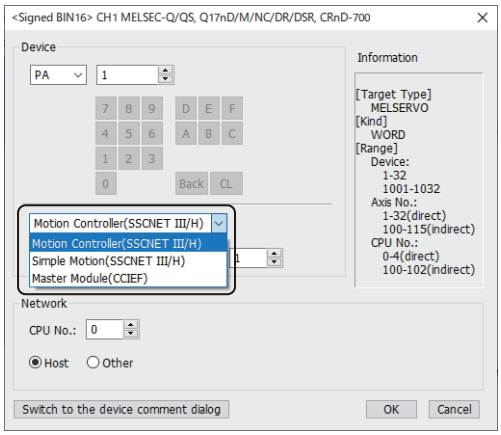

Item	Description
[Motion Controller(SSCNET III/H)]	Select this item to connect the GOT through a Motion controller. The following item is displayed. • [Axis No.]: Set the axis number to be monitored.
[Simple Motion(SSCNET III/H)]	Select this item to connect the GOT through a Simple Motion module (QD77MS). The following item is displayed. • [Unit No.]: Set the first 2 digits of the 3-digit number that represents the start I/O number of the Simple Motion module. • [Axis No.]: Set the axis number to be monitored.
[Master Module(CCIEF)]	Select this item to connect the GOT through the master station on the CC-Link IE Field Network or a Simple Motion module (QD77GF).

The following shows the notation and setting range of virtual devices.

Device name	Device notation and setting range		Notation example
PA	[Motion Controller(SSCNET III/H)]	A(Axis No.)-PA(Device) • Axis No. (decimal): 1 to 32 (direct), 100 to 115 (indirect) • Device (decimal): 1 to 44, 1001 to 1044	A32-PA1
	[Simple Motion(SSCNET III/H)]	U(Unit No.)-A(Axis No.)-PA(Device) • Unit No. (hexadecimal): 00 to FF (direct), 100 to 10F (indirect) • Axis No. (decimal): 1 to 32 (direct), 100 to 115 (indirect) • Device (decimal): 1 to 44, 1001 to 1044	UFF-A32-PA1
	[Master Module(CCIEF)]	PA(Device) • Device (decimal): 1 to 44, 1001 to 1044	PA1
PB	[Motion Controller(SSCNET III/H)]	A(Axis No.)-PB(Device) • Axis No. (decimal): 1 to 32 (direct), 100 to 115 (indirect) • Device (decimal): 1 to 92, 1001 to 1092	A32-PB1
	[Simple Motion(SSCNET III/H)]	U(Unit No.)-A(Axis No.)-PB(Device) • Unit No. (hexadecimal): 00 to FF (direct), 100 to 10F (indirect) • Axis No. (decimal): 1 to 32 (direct), 100 to 115 (indirect) • Device (decimal): 1 to 92, 1001 to 1092	UFF-A32-PB1
	[Master Module(CCIEF)]	PB(Device) • Device (decimal): 1 to 92, 1001 to 1092	PB1
PC	[Motion Controller(SSCNET III/H)]	A(Axis No.)-PC(Device) • Axis No. (decimal): 1 to 32 (direct), 100 to 115 (indirect) • Device (decimal): 1 to 90, 1001 to 1090	A32-PC1
	[Simple Motion(SSCNET III/H)]	U(Unit No.)-A(Axis No.)-PC(Device) • Unit No. (hexadecimal): 00 to FF (direct), 100 to 10F (indirect) • Axis No. (decimal): 1 to 32 (direct), 100 to 115 (indirect) • Device (decimal): 1 to 90, 1001 to 1090	UFF-A32-PC1
	[Master Module(CCIEF)]	PC(Device) • Device (decimal): 1 to 90, 1001 to 1090	PC1

Device name	Device notation and setting range		Notation example
PD	[Motion Controller(SSCNET III/H)]	A(Axis No.)-PD(Device) • Axis No. (decimal): 1 to 32 (direct), 100 to 115 (indirect) • Device (decimal): 1 to 72, 1001 to 1072	A32-PD1
	[Simple Motion(SSCNET III/H)]	U(Unit No.)-A(Axis No.)-PD(Device) • Unit No. (hexadecimal): 00 to FF (direct), 100 to 10F (indirect) • Axis No. (decimal): 1 to 32 (direct), 100 to 115 (indirect) • Device (decimal): 1 to 72, 1001 to 1072	UFF-A32-PD1
	[Master Module(CCIEF)]	PD(Device) • Device (decimal): 1 to 72, 1001 to 1072	PD1
PO	[Motion Controller(SSCNET III/H)]	A(Axis No.)-PO(Device) • Axis No. (decimal): 1 to 32 (direct), 100 to 115 (indirect) • Device (decimal): 1 to 2, 1001 to 1002	A32-PO1
	[Simple Motion(SSCNET III/H)]	U(Unit No.)-A(Axis No.)-PO(Device) • Unit No. (hexadecimal): 00 to FF (direct), 100 to 10F (indirect) • Axis No. (decimal): 1 to 32 (direct), 100 to 115 (indirect) • Device (decimal): 1 to 2, 1001 to 1002	UFF-A32-PO1
PS	[Motion Controller(SSCNET III/H)]	A(Axis No.)-PS(Device) • Axis No. (decimal): 1 to 32 (direct), 100 to 115 (indirect) • Device (decimal): 1 to 99, 1001 to 1099	A32-PS1
	[Simple Motion(SSCNET III/H)]	U(Unit No.)-A(Axis No.)-PS(Device) • Unit No. (hexadecimal): 00 to FF (direct), 100 to 10F (indirect) • Axis No. (decimal): 1 to 32 (direct), 100 to 115 (indirect) • Device (decimal): 1 to 99, 1001 to 1099	UFF-A32-PS1
PU	[Motion Controller(SSCNET III/H)]	A(Axis No.)-PU(Device) • Axis No. (decimal): 1 to 32 (direct), 100 to 115 (indirect) • Device (decimal): 1 to 44, 1001 to 1044	A32-PU1
	[Simple Motion(SSCNET III/H)]	U(Unit No.)-A(Axis No.)-PU(Device) • Unit No. (hexadecimal): 00 to FF (direct), 100 to 10F (indirect) • Axis No. (decimal): 1 to 32 (direct), 100 to 115 (indirect) • Device (decimal): 1 to 44, 1001 to 1044	UFF-A32-PU1
PT	[Master Module(CCIEF)]	PT(Device) • Device (decimal): 1 to 90, 1001 to 1090	PT1
PL	[Motion Controller(SSCNET III/H)]	A(Axis No.)-PL(Device) • Axis No. (decimal): 1 to 32 (direct), 100 to 115 (indirect) • Device (decimal): 1 to 72, 1001 to 1072	A32-PL1
	[Simple Motion(SSCNET III/H)]	U(Unit No.)-A(Axis No.)-PL(Device) • Unit No. (hexadecimal): 00 to FF (direct), 100 to 10F (indirect) • Axis No. (decimal): 1 to 32 (direct), 100 to 115 (indirect) • Device (decimal): 1 to 72, 1001 to 1072	UFF-A32-PL1
	[Master Module(CCIEF)]	PL(Device) • Device (decimal): 1 to 72, 1001 to 1072	PL1
PN	[Master Module(CCIEF)]	PN(Device) • Device (decimal): 1 to 32, 1001 to 1032	PN1
ST	[Motion Controller(SSCNET III/H)]	A(Axis No.)-ST(Device) • Axis No. (decimal): 1 to 32 (direct), 100 to 115 (indirect) • Device (decimal): 0 to 48	A32-ST0
	[Simple Motion(SSCNET III/H)]	U(Unit No.)-A(Axis No.)-ST(Device) • Unit No. (hexadecimal): 00 to FF (direct), 100 to 10F (indirect) • Axis No. (decimal): 1 to 32 (direct), 100 to 115 (indirect) • Device (decimal): 0 to 48	UFF-A32-ST0
	[Master Module(CCIEF)]	ST(Device) • Device (decimal): 0 to 48	ST0
PE	[Motion Controller(SSCNET III/H)]	A(Axis No.)-PE(Device) • Axis No. (decimal): 1 to 32 (direct), 100 to 115 (indirect) • Device (decimal): 1 to 88, 1001 to 1088	A32-PE1
	[Simple Motion(SSCNET III/H)]	U(Unit No.)-A(Axis No.)-PE(Device) • Unit No. (hexadecimal): 00 to FF (direct), 100 to 10F (indirect) • Axis No. (decimal): 1 to 32 (direct), 100 to 115 (indirect) • Device (decimal): 1 to 88, 1001 to 1088	UFF-A32-PE1
	[Master Module(CCIEF)]	PE(Device) • Device (decimal): 1 to 88, 1001 to 1088	PE1

Device name	Device notation and setting range		Notation example
PF	[Motion Controller(SSCNET III/H)]	A(Axis No.)-PF(Device) • Axis No. (decimal): 1 to 32 (direct), 100 to 115 (indirect) • Device (decimal): 1 to 99, 1001 to 1099	A32-PF1
	[Simple Motion(SSCNET III/H)]	U(Unit No.)-A(Axis No.)-PF(Device) • Unit No. (hexadecimal): 00 to FF (direct), 100 to 10F (indirect) • Axis No. (decimal): 1 to 32 (direct), 100 to 115 (indirect) • Device (decimal): 1 to 99, 1001 to 1099	UFF-A32-PF1
	[Master Module(CCIEF)]	PF(Device) • Device (decimal): 1 to 99, 1001 to 1099	PF1
ALM	[Motion Controller(SSCNET III/H)]	A(Axis No.)-ALM(Device) • Axis No. (decimal): 1 to 32 (direct), 100 to 115 (indirect) • Device (decimal): 0 to 2, 11 to 59, 200 to 215, 220 to 235, 240 to 255, 260 to 275, 280 to 295, 300 to 315	A32-ALM0
	[Simple Motion(SSCNET III/H)]	U(Unit No.)-A(Axis No.)-ALM(Device) • Unit No. (hexadecimal): 00 to FF (direct), 100 to 10F (indirect) • Axis No. (decimal): 1 to 32 (direct), 100 to 115 (indirect) • Device (decimal): 0 to 2, 11 to 59, 200 to 215, 220 to 235, 240 to 255, 260 to 275, 280 to 295, 300 to 315	UFF-A32-ALM0
	[Master Module(CCIEF)]	ALM(Device) • Device (decimal): 0 to 2, 11 to 59, 200 to 215, 220 to 235, 240 to 255	ALM0
POS	[Master Module(CCIEF)]	POS(Device) • Device (decimal): 1 to 255, 1001 to 1255	POS1
SPD	[Master Module(CCIEF)]	SPD(Device) • Device (decimal): 1 to 255, 1001 to 1255	SPD1
ACT	[Master Module(CCIEF)]	ACT(Device) • Device (decimal): 1 to 255, 1001 to 1255	ACT1
DCT	[Master Module(CCIEF)]	DCT(Device) • Device (decimal): 1 to 255, 1001 to 1255	DCT1
DWL	[Master Module(CCIEF)]	DWL(Device) • Device (decimal): 1 to 255, 1001 to 1255	DWL1
AUX	[Master Module(CCIEF)]	AUX(Device) • Device (decimal): 1 to 255, 1001 to 1255	AUX1
MD	[Motion Controller(SSCNET III/H)]	A(Axis No.)-MD(Device) • Axis No. (decimal): 1 to 32 (direct), 100 to 115 (indirect) • Device (decimal): 0 to 21	A32-MD0
	[Simple Motion(SSCNET III/H)]	U(Unit No.)-A(Axis No.)-MD(Device) • Unit No. (hexadecimal): 00 to FF (direct), 100 to 10F (indirect) • Axis No. (decimal): 1 to 32 (direct), 100 to 115 (indirect) • Device (decimal): 0 to 21	UFF-A32-MD0
	[Master Module(CCIEF)]	MD(Device) • Device (decimal): 0 to 21	MD0
GFDS	[Motion Controller(SSCNET III/H)]	A(Axis No.)-GFDS(Device) • Axis No. (decimal): 1 to 32 (direct), 100 to 115 (indirect) • Device (decimal): 0 to 5	A32-GFDS0
	[Simple Motion(SSCNET III/H)]	U(Unit No.)-A(Axis No.)-GFDS(Device) • Unit No. (hexadecimal): 00 to FF (direct), 100 to 10F (indirect) • Axis No. (decimal): 1 to 32 (direct), 100 to 115 (indirect) • Device (decimal): 0 to 5	UFF-A32-GFDS0
ECCDS	[Motion Controller(SSCNET III/H)]	A(Axis No.)-ECCDS(Device) • Axis No. (decimal): 1 to 32 (direct), 100 to 115 (indirect) • Device (decimal): 0 to 5	A32-ECCDS0
	[Simple Motion(SSCNET III/H)]	U(Unit No.)-A(Axis No.)-ECCDS(Device) • Unit No. (hexadecimal): 00 to FF (direct), 100 to 10F (indirect) • Axis No. (decimal): 1 to 32 (direct), 100 to 115 (indirect) • Device (decimal): 0 to 5	UFF-A32-ECCDS0

Device name	Device notation and setting range		Notation example
OTS	[Motion Controller(SSCNET III/H)]	A(Axis No.)-OTS(Device) • Axis No. (decimal): 1 to 32 (direct), 100 to 115 (indirect) • Device (decimal): 0 to 5, 3000	A32-OTS0
	[Simple Motion(SSCNET III/H)]	U(Unit No.)-A(Axis No.)-OTS(Device) • Unit No. (hexadecimal): 00 to FF (direct), 100 to 10F (indirect) • Axis No. (decimal): 1 to 32 (direct), 100 to 115 (indirect) • Device (decimal): 0 to 5, 3000	UFF-A32-OTS0
	[Master Module(CCIEF)]	OTS(Device) • Device (decimal): 0 to 5	OTS0
DI	[Motion Controller(SSCNET III/H)]	A(Axis No.)-DI(Device) • Axis No. (decimal): 1 to 32 (direct), 100 to 115 (indirect) • Device (decimal): 0 to 6	A32-DI0
	[Simple Motion(SSCNET III/H)]	U(Unit No.)-A(Axis No.)-DI(Device) • Unit No. (hexadecimal): 00 to FF (direct), 100 to 10F (indirect) • Axis No. (decimal): 1 to 32 (direct), 100 to 115 (indirect) • Device (decimal): 0 to 6	UFF-A32-DI0
	[Master Module(CCIEF)]	DI(Device) • Device (decimal): 0 to 6	DI0
DO	[Motion Controller(SSCNET III/H)]	A(Axis No.)-DO(Device) • Axis No. (decimal): 1 to 32 (direct), 100 to 115 (indirect) • Device (decimal): 0 to 4	A32-DO0
	[Simple Motion(SSCNET III/H)]	U(Unit No.)-A(Axis No.)-DO(Device) • Unit No. (hexadecimal): 00 to FF (direct), 100 to 10F (indirect) • Axis No. (decimal): 1 to 32 (direct), 100 to 115 (indirect) • Device (decimal): 0 to 4	UFF-A32-DO0
	[Master Module(CCIEF)]	DO(Device) • Device (decimal): 0 to 4	DO0

For indirect specification of a module or axis number, refer to the following.

☞ Page 1398 Indirect specification of a module number ([MELSEC iQ-R, RnMT/NC/RT, CR800-D], [MELSEC iQ-R, RnMT/RT, CR800-D])

☞ Page 1399 Indirect specification of an axis number or axis designation ([MELSEC iQ-R, RnMT/NC/RT, CR800-D], [MELSEC iQ-R, RnMT/RT, CR800-D])

Availability of writing/reading data to/from word devices ([MELSEC-Q/QS, Q17nD/M/NC/DR/DSR, CRnD-700], [MELSEC-Q, Q17nD/M/DR/DSR, CRnD-700])

The following shows the availability of writing/reading data to/from word devices by device type.

The GOT can only read data from the device when the QS001CPU is used.

To write data to the consecutive devices of a Q172DR(CR750-Q), use the Q172DR(CR750-Q) with firmware version R6b or later.

R/W: Both read and write

R/-: Read only

-/W: Write only

-/-: No read/write access

Device name	Device type			
	Word (16 bits)	Double-word (32 bits)	Quad-word (64 bits)	Bit of word data
TN	R/W	R/W	-/-	-/-
CN	R/W	R/W	-/-	-/-
SN	R/W	R/W	-/-	-/-
D	R/W	R/W	R/W	R/W
SD	R/W	R/W	R/W	R/W
W	R/W	R/W	R/W	R/W
SW	R/W	R/W	-/-	R/W
R	R/W	R/W	R/W	R/W
ER	R/W	R/W	R/W	R/W
ZR	R/W	R/W	R/W	R/W
Z	R/W	R/W	-/-	-/-
G	R/W	R/W	R/W	R/W
Ww	R/W	R/W	R/W	R/W
Wr	R/W	R/W	R/W	R/W
LW	R/W	R/W	R/W	R/W
#	R/W	R/W	-/-	R/W
U3E0	R/W	R/W	R/W	R/W
U3E1	R/W	R/W	R/W	R/W
U3E2	R/W	R/W	R/W	R/W
U3E3	R/W	R/W	R/W	R/W
PA	R/W	R/W	-/-	-/-
PB	R/W	R/W	-/-	-/-
PC	R/W	R/W	-/-	-/-
PD	R/W	R/W	-/-	-/-
PO	R/W	R/W	-/-	-/-
PS	R/W	R/W	-/-	-/-
PU	R/W	R/W	-/-	-/-
PT	R/W	R/W	-/-	-/-
PL	R/W	R/W	-/-	-/-
PN	R/W	R/W	-/-	-/-
ST	R/-	R/-	-/-	-/-
PE	R/W	R/W	-/-	-/-
PF	R/W	R/W	-/-	-/-
ALM	R/-	R/-	-/-	-/-
POS	R/W	R/W	-/-	-/-
SPD	R/W	R/W	-/-	-/-
ACT	R/W	R/W	-/-	-/-
DCT	R/W	R/W	-/-	-/-
DWL	R/W	R/W	-/-	-/-
AUX	R/W	R/W	-/-	-/-

Device name	Device type			
	Word (16 bits)	Double-word (32 bits)	Quad-word (64 bits)	Bit of word data
MD	R/-	R/-	-/-	-/-
GFDS	R/-	R/-	-/-	-/-
ECCDS	R/-	R/-	-/-	-/-
OTS*1	R/W	R/W	-/-	-/-
DI	R/-	R/W	-/-	-/-
DO	R/-	R/-	-/-	-/-

*1 Only reading is available for OTS0 to OTS5.

Monitoring-supported double-word devices ([MELSEC-Q/QS, Q17nD/M/NC/DR/DSR, CRnD-700], [MELSEC-Q, Q17nD/M/DR/DSR, CRnD-700])

The following table shows monitoring-supported double-word devices.

To check whether writing/reading data to/from each device is available, refer to the following.

☞ Page 1511 Availability of writing/reading data to/from double-word devices ([MELSEC-Q/QS, Q17nD/M/NC/DR/DSR, CRnD-700], [MELSEC-Q, Q17nD/M/DR/DSR, CRnD-700])

○: Available

×: Not available

Device name		Device No. representation	Setting range	Specifications of EG devices*1	
				Assignment to EG devices	Access using a client
ALD*2	Life diagnosis	Decimal	☞ Page 1510 Setting virtual double-word devices for servo amplifiers ([MELSEC-Q/QS, Q17nD/M/NC/DR/DSR, CRnD-700], [MELSEC-Q, Q17nD/M/DR/DSR, CRnD-700])	×	×
TMI*2	Input signal for test operation (for test operation)	Decimal	☞ Page 1510 Setting virtual double-word devices for servo amplifiers ([MELSEC-Q/QS, Q17nD/M/NC/DR/DSR, CRnD-700], [MELSEC-Q, Q17nD/M/DR/DSR, CRnD-700])	×	×
TMO*2	Forced output of signal pin (for test operation)	Decimal	☞ Page 1510 Setting virtual double-word devices for servo amplifiers ([MELSEC-Q/QS, Q17nD/M/NC/DR/DSR, CRnD-700], [MELSEC-Q, Q17nD/M/DR/DSR, CRnD-700])	×	×
TMD*2	Set data (for test operation)	Decimal	☞ Page 1510 Setting virtual double-word devices for servo amplifiers ([MELSEC-Q/QS, Q17nD/M/NC/DR/DSR, CRnD-700], [MELSEC-Q, Q17nD/M/DR/DSR, CRnD-700])	×	×
AL*3	Faults history	Decimal	0 to 899	×	×
LPr*3*4	Parameter (32-bit)	Decimal	0 to 1500	×	×
OP*3	Operation parameter	Decimal	0 to 5	×	×
PV*3	Current value monitor	Decimal	1 to 143	×	×

*1 For the devices assigned to EG devices (gateway devices) and the compatible clients, refer to the following.
📖GT Designer3 (GOT2000) Screen Design Manual

*2 Virtual servo amplifier device
For the details, refer to the following.
☞ Page 1512 Virtual servo amplifier devices ([MELSEC-Q/QS, Q17nD/M/NC/DR/DSR, CRnD-700], [MELSEC-Q, Q17nD/M/DR/DSR, CRnD-700])

*3 Virtual inverter device
For the details, refer to the following.
☞ Page 1513 Virtual inverter devices ([MELSEC-Q/QS, Q17nD/M/NC/DR/DSR, CRnD-700], [MELSEC-Q, Q17nD/M/DR/DSR, CRnD-700])

*4 If you specify LPr900 to LPr935, the following item is displayed in the device setting dialog.
[Setting items (for calibration parameters)]: [Bias/gain value], [Analog input value]
Enclose the device number in parentheses when selecting [Analog input value].
Example 1) Notation when [Bias/gain value] is selected: LPr900
Example 2) Notation when [Analog input value] is selected: LPr(900)
When LPr900 or LPr901 (Calibration parameter) is specified, selecting [Bias/gain value] or [Analog input value] does not affect the monitoring target.

Setting virtual double-word devices for servo amplifiers ([MELSEC-Q/QS, Q17nD/M/NC/DR/DSR, CRnD-700], [MELSEC-Q, Q17nD/M/DR/DSR, CRnD-700])

For virtual servo amplifier devices, the notation differs according to the connection type between the GOT and the servo amplifier.

Select one of the following according to the control type in the device setting dialog.

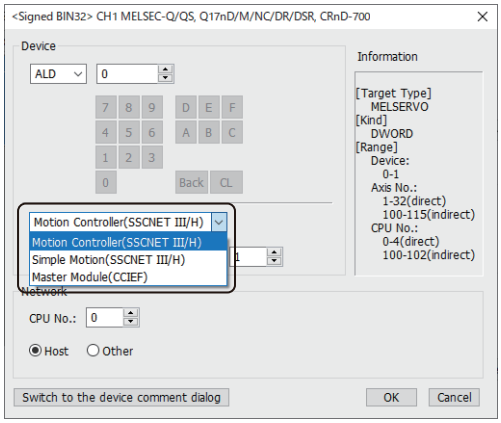

Item	Description
[Motion Controller(SSCNET III/H)]	Select this item to connect the GOT through a Motion controller. The following item is displayed. • [Axis No.]: Set the axis number to be monitored.
[Simple Motion(SSCNET III/H)]	Select this item to connect the GOT through a Simple Motion module (QD77MS). The following item is displayed. • [Unit No.]: Set the first 2 digits of the 3-digit number that represents the start I/O number of the Simple Motion module. • [Axis No.]: Set the axis number to be monitored.
[Master Module(CCIEF)]	Select this item to connect the GOT through the master station on the CC-Link IE Field Network or a Simple Motion module (QD77GF).

The following shows the notation and setting range of virtual devices.

Device name	Device notation and setting range		Notation example
ALD	[Motion Controller(SSCNET III/H)]	A(Axis No.)-ALD(Device) • Axis No. (decimal): 1 to 32 (direct), 100 to 115 (indirect) • Device (decimal): 0 to 1	A32-ALD0
	[Simple Motion(SSCNET III/H)]	U(Unit No.)-A(Axis No.)-ALD(Device) • Unit No. (hexadecimal): 00 to FF (direct), 100 to 10F (indirect) • Axis No. (decimal): 1 to 32 (direct), 100 to 115 (indirect) • Device (decimal): 0 to 1	UFF-A32-ALD0
	[Master Module(CCIEF)]	ALD(Device) • Device (decimal): 0 to 1	ALD0
TMI	[Motion Controller(SSCNET III/H)]	A(Axis No.)-TMI(Device) • Axis No. (decimal): 1 to 32 (direct), 100 to 115 (indirect) • Device (decimal): 0 to 2	A32-TMI0
	[Simple Motion(SSCNET III/H)]	U(Unit No.)-A(Axis No.)-TMI(Device) • Unit No. (hexadecimal): 00 to FF (direct), 100 to 10F (indirect) • Axis No. (decimal): 1 to 32 (direct), 100 to 115 (indirect) • Device (decimal): 0 to 2	UFF-A32-TMI0
	[Master Module(CCIEF)]	TMI(Device) • Device (decimal): 0 to 2	TMI0
TMO	[Motion Controller(SSCNET III/H)]	A(Axis No.)-TMO(Device) • Axis No. (decimal): 1 to 32 (direct), 100 to 115 (indirect) • Device (decimal): 0	A32-TMO0
	[Simple Motion(SSCNET III/H)]	U(Unit No.)-A(Axis No.)-TMO(Device) • Unit No. (hexadecimal): 00 to FF (direct), 100 to 10F (indirect) • Axis No. (decimal): 1 to 32 (direct), 100 to 115 (indirect) • Device (decimal): 0	UFF-A32-TMO0
	[Master Module(CCIEF)]	TMO(Device) • Device (decimal): 0	TMO0

Device name	Device notation and setting range		Notation example
TMD	[Motion Controller(SSCNET III/H)]	A(Axis No.)-TMD(Device) • Axis No. (decimal): 1 to 32 (direct), 100 to 115 (indirect) • Device (decimal): 0 to 1, 3	A32-TMD0
	[Simple Motion(SSCNET III/H)]	U(Unit No.)-A(Axis No.)-TMD(Device) • Unit No. (hexadecimal): 00 to FF (direct), 100 to 10F (indirect) • Axis No. (decimal): 1 to 32 (direct), 100 to 115 (indirect) • Device (decimal): 0 to 1, 3	UFF-A32-TMD0
	[Master Module(CCIEF)]	TMD(Device) • Device (decimal): 0 to 1, 3	TMD0

For indirect specification of a module or axis number, refer to the following.

☞ Page 1398 Indirect specification of a module number ([MELSEC iQ-R, RnMT/NC/RT, CR800-D], [MELSEC iQ-R, RnMT/RT, CR800-D])

☞ Page 1399 Indirect specification of an axis number or axis designation ([MELSEC iQ-R, RnMT/NC/RT, CR800-D], [MELSEC iQ-R, RnMT/RT, CR800-D])

Availability of writing/reading data to/from double-word devices ([MELSEC-Q/QS, Q17nD/M/NC/DR/DSR, CRnD-700], [MELSEC-Q, Q17nD/M/DR/DSR, CRnD-700])

The following shows the availability of writing/reading data to/from double-word devices by device type.

The GOT can only read data from the device when the QS001CPU is used.

To write data to the consecutive devices of a Q172DR(CR750-Q), use the Q172DR(CR750-Q) with firmware version R6b or later.

R/W: Both read and write

R/-: Read only

-/W: Write only

-/-: No read/write access

Device name	Device type			
	Word (16 bits)	Double-word (32 bits)	Quad-word (64 bits)	Bit of double-word data
ALD	-/-	R/-	-/-	-/-
TMI	-/-	-/W	-/-	-/-
TMO	-/-	-/W	-/-	-/-
TMD	-/-	-/W	-/-	-/-
AL	-/-	R/-	-/-	-/-
LPr	-/-	R/W	-/-	-/-
OP	-/-	R/W	-/-	-/-
PV	-/-	R/-	-/-	-/-

A

Virtual servo amplifier devices ([MELSEC-Q/QS, Q17nD/M/NC/DR/DSR, CRnD-700], [MELSEC-Q, Q17nD/M/DR/DSR, CRnD-700])

The following shows the correspondence between the virtual devices used in the GOT and the servo amplifier data.

Virtual device name	Reference
SP	☞ Page 1418 Servo amplifier request ([MELSEC iQ-R, RnMT/NC/RT, CR800-D], [MELSEC iQ-R, RnMT/RT, CR800-D])
OM	☞ Page 1418 Operation mode selection ([MELSEC iQ-R, RnMT/NC/RT, CR800-D], [MELSEC iQ-R, RnMT/RT, CR800-D])
TMB	☞ Page 1419 Instruction demand (for test operation) ([MELSEC iQ-R, RnMT/NC/RT, CR800-D], [MELSEC iQ-R, RnMT/RT, CR800-D])
OTI	☞ Page 1419 One-touch tuning instruction ([MELSEC iQ-R, RnMT/NC/RT, CR800-D], [MELSEC iQ-R, RnMT/RT, CR800-D])
GFDI	☞ Page 1420 Gear failure diagnosis instruction ([MELSEC iQ-R, RnMT/NC/RT, CR800-D], [MELSEC iQ-R, RnMT/RT, CR800-D])
ECCDI	☞ Page 1420 Encoder communication circuit diagnosis instruction ([MELSEC iQ-R, RnMT/NC/RT, CR800-D], [MELSEC iQ-R, RnMT/RT, CR800-D])
PA	☞ Page 1421 Basic parameter ([MELSEC iQ-R, RnMT/NC/RT, CR800-D], [MELSEC iQ-R, RnMT/RT, CR800-D])
PB	☞ Page 1423 Gain filter parameter ([MELSEC iQ-R, RnMT/NC/RT, CR800-D], [MELSEC iQ-R, RnMT/RT, CR800-D])
PC	☞ Page 1427 Extension setting parameter ([MELSEC iQ-R, RnMT/NC/RT, CR800-D], [MELSEC iQ-R, RnMT/RT, CR800-D])
PD	☞ Page 1430 I/O setting parameter ([MELSEC iQ-R, RnMT/NC/RT, CR800-D], [MELSEC iQ-R, RnMT/RT, CR800-D])
PO	☞ Page 1432 Option unit parameter ([MELSEC iQ-R, RnMT/NC/RT, CR800-D], [MELSEC iQ-R, RnMT/RT, CR800-D])
PS	☞ Page 1432 Special parameter ([MELSEC iQ-R, RnMT/NC/RT, CR800-D], [MELSEC iQ-R, RnMT/RT, CR800-D])
PU	☞ Page 1432 Multi encoder parameter ([MELSEC iQ-R, RnMT/NC/RT, CR800-D], [MELSEC iQ-R, RnMT/RT, CR800-D])
PT	☞ Page 1433 Positioning control parameter ([MELSEC iQ-R, RnMT/NC/RT, CR800-D], [MELSEC iQ-R, RnMT/RT, CR800-D])
PL	☞ Page 1436 Motor extension parameter, linear servo motor/DD motor setting parameter ([MELSEC iQ-R, RnMT/NC/RT, CR800-D], [MELSEC iQ-R, RnMT/RT, CR800-D])
PN	☞ Page 1437 Network setting parameter ([MELSEC iQ-R, RnMT/NC/RT, CR800-D], [MELSEC iQ-R, RnMT/RT, CR800-D])
ST	☞ Page 1439 Status display ([MELSEC iQ-R, RnMT/NC/RT, CR800-D], [MELSEC iQ-R, RnMT/RT, CR800-D])
PE	☞ Page 1441 Extension setting No.2 parameter ([MELSEC iQ-R, RnMT/NC/RT, CR800-D], [MELSEC iQ-R, RnMT/RT, CR800-D])
PF	☞ Page 1443 Extension setting No.3 parameter ([MELSEC iQ-R, RnMT/NC/RT, CR800-D], [MELSEC iQ-R, RnMT/RT, CR800-D])
ALM	☞ Page 1447 Alarm ([MELSEC iQ-R, RnMT/NC/RT, CR800-D], [MELSEC iQ-R, RnMT/RT, CR800-D])
POS	☞ Page 1456 Point table (position) ([MELSEC iQ-R, RnMT/NC/RT, CR800-D], [MELSEC iQ-R, RnMT/RT, CR800-D])
SPD	☞ Page 1456 Point table (speed) ([MELSEC iQ-R, RnMT/NC/RT, CR800-D], [MELSEC iQ-R, RnMT/RT, CR800-D])
ACT	☞ Page 1457 Point table (acceleration time constant) ([MELSEC iQ-R, RnMT/NC/RT, CR800-D], [MELSEC iQ-R, RnMT/RT, CR800-D])
DCT	☞ Page 1457 Point table (deceleration time constant) ([MELSEC iQ-R, RnMT/NC/RT, CR800-D], [MELSEC iQ-R, RnMT/RT, CR800-D])
DWL	☞ Page 1457 Point table (dwell) ([MELSEC iQ-R, RnMT/NC/RT, CR800-D], [MELSEC iQ-R, RnMT/RT, CR800-D])
AUX	☞ Page 1458 Point table (auxiliary function) ([MELSEC iQ-R, RnMT/NC/RT, CR800-D], [MELSEC iQ-R, RnMT/RT, CR800-D])
MD	☞ Page 1459 Machine diagnosis data ([MELSEC iQ-R, RnMT/NC/RT, CR800-D], [MELSEC iQ-R, RnMT/RT, CR800-D])
GFDS	☞ Page 1460 Gear failure diagnosis data ([MELSEC iQ-R, RnMT/NC/RT, CR800-D], [MELSEC iQ-R, RnMT/RT, CR800-D])
ECCDS	☞ Page 1461 Encoder communication circuit diagnosis data ([MELSEC iQ-R, RnMT/NC/RT, CR800-D], [MELSEC iQ-R, RnMT/RT, CR800-D])
OTS	☞ Page 1461 One-touch tuning data ([MELSEC iQ-R, RnMT/NC/RT, CR800-D], [MELSEC iQ-R, RnMT/RT, CR800-D])
DI	☞ Page 1462 External input signal in MR-J5-G(-RJ) and MR-J5W□-G ([MELSEC iQ-R, RnMT/NC/RT, CR800-D], [MELSEC iQ-R, RnMT/RT, CR800-D]) ☞ Page 1463 External input signal in MR-J5(W)-□B(-RJ) ([MELSEC iQ-R, RnMT/NC/RT, CR800-D], [MELSEC iQ-R, RnMT/RT, CR800-D])
DO	☞ Page 1464 External output signal in MR-J5-G(-RJ) and MR-J5W□-G ([MELSEC iQ-R, RnMT/NC/RT, CR800-D], [MELSEC iQ-R, RnMT/RT, CR800-D]) ☞ Page 1465 External output signal in MR-J5(W)-□B(-RJ) ([MELSEC iQ-R, RnMT/NC/RT, CR800-D], [MELSEC iQ-R, RnMT/RT, CR800-D])
ALD	☞ Page 1466 Life Diagnosis ([MELSEC iQ-R, RnMT/NC/RT, CR800-D], [MELSEC iQ-R, RnMT/RT, CR800-D])
TMI	☞ Page 1466 Input signal for test operation (for test operation) ([MELSEC iQ-R, RnMT/NC/RT, CR800-D], [MELSEC iQ-R, RnMT/RT, CR800-D])
TMO	☞ Page 1467 Forced output of signal pin (for test operation) ([MELSEC iQ-R, RnMT/NC/RT, CR800-D], [MELSEC iQ-R, RnMT/RT, CR800-D])
TMD	☞ Page 1467 Set data (for test operation) ([MELSEC iQ-R, RnMT/NC/RT, CR800-D], [MELSEC iQ-R, RnMT/RT, CR800-D])

Precautions for virtual servo amplifier devices ([MELSEC-Q/QS, Q17nD/M/NC/DR/DSR, CRnD-700], [MELSEC-Q, Q17nD/M/DR/DSR, CRnD-700])

For the precautions for virtual servo amplifier devices, refer to the following.

☞ Page 1468 Precautions for virtual servo amplifier devices ([MELSEC iQ-R, RnMT/NC/RT, CR800-D], [MELSEC iQ-R, RnMT/RT, CR800-D])

Virtual inverter devices ([MELSEC-Q/QS, Q17nD/M/NC/DR/DSR, CRnD-700], [MELSEC-Q, Q17nD/M/DR/DSR, CRnD-700])

The following shows the correspondence between the virtual devices used in the GOT and the inverter data.

Virtual device name	Reference
IOST	☞ Page 1469 I/O terminal monitor ([MELSEC iQ-R, RnMT/NC/RT, CR800-D], [MELSEC iQ-R, RnMT/RT, CR800-D])
CMD	☞ Page 1471 Operation command ([MELSEC iQ-R, RnMT/NC/RT, CR800-D], [MELSEC iQ-R, RnMT/RT, CR800-D])
AL	☞ Page 1472 Faults history ([MELSEC iQ-R, RnMT/NC/RT, CR800-D], [MELSEC iQ-R, RnMT/RT, CR800-D])
LPr	☞ Page 1474 Parameter (32-bit) ([MELSEC iQ-R, RnMT/NC/RT, CR800-D], [MELSEC iQ-R, RnMT/RT, CR800-D])
OP	☞ Page 1475 Operation parameter ([MELSEC iQ-R, RnMT/NC/RT, CR800-D], [MELSEC iQ-R, RnMT/RT, CR800-D])
PV	☞ Page 1476 Current value monitor ([MELSEC iQ-R, RnMT/NC/RT, CR800-D], [MELSEC iQ-R, RnMT/RT, CR800-D])

[MELSEC QnA, MELDAS C6*]

GT27 GT25 GT23 GT21 GS25 GS21

Item	Reference
Specifications of bit devices	☞ Page 1514 Monitoring-supported bit devices ([MELSEC QnA, MELDAS C6*])
	☞ Page 1515 Availability of writing/reading data to/from bit devices ([MELSEC QnA, MELDAS C6*])
Specifications of word devices	☞ Page 1516 Monitoring-supported word devices ([MELSEC QnA, MELDAS C6*])
	☞ Page 1517 Availability of writing/reading data to/from word devices ([MELSEC QnA, MELDAS C6*])

Monitoring-supported bit devices ([MELSEC QnA, MELDAS C6*])

The following table shows monitoring-supported bit devices.

To check whether writing/reading data to/from each device is available, refer to the following.

☞ Page 1515 Availability of writing/reading data to/from bit devices ([MELSEC QnA, MELDAS C6*])

○: Available

×: Not available

Device name*3*4		Device No. representation	Setting range		Specifications of EG devices*1	
			GT27, GT25, GT23, SoftGOT2000, and GS25	GT21 and GS21	Assignment to EG devices	Access using a client
X	Input relay	Hexadecimal	0000 to 3FFF	0000 to 1FFF	○	○
Y	Output relay	Hexadecimal	0000 to 3FFF	0000 to 1FFF	○	○
B	Link relay	Hexadecimal	0000 to 7FFF	0000 to 7FFF	○	○
M*2	Internal relay	Decimal	0 to 32767	0 to 32767	○	○
L	Latch relay	Decimal	0 to 32767	0 to 32767	○	○
S	Step relay	Decimal	0 to 32767	0 to 32767	○	○
F	Annunciator	Decimal	0 to 32767	0 to 32767	○	○
TC*2	Timer coil	Decimal	0 to 32767	0 to 32767	○	○ (Not usable as word data)
TT*2	Timer contact	Decimal	0 to 32767	0 to 32767	○	○ (Not usable as word data)
CC*2	Counter coil	Decimal	0 to 32767	0 to 32767	○	○ (Not usable as word data)
CT*2	Counter contact	Decimal	0 to 32767	0 to 32767	○	○ (Not usable as word data)
SC*2	Retentive timer coil	Decimal	0 to 32767	0 to 32767	○	○ (Not usable as word data)
SS*2	Retentive timer contact	Decimal	0 to 32767	0 to 32767	○	○ (Not usable as word data)
SB	Link special relay	Hexadecimal	0000 to 07FF	0000 to 07FF	○	○
SM	Special relay	Decimal	0 to 2047	0 to 2047	○	○
RX	Remote input	Hexadecimal	000 to 7FF	-	○	○
RY	Remote output	Hexadecimal	000 to 7FF	-	○	○
LB	Link relay	Hexadecimal	0000 to 7FFF	-	○	○

*1 For the devices assigned to EG devices (gateway devices) and the compatible clients, refer to the following.
📖GT Designer3 (GOT2000) Screen Design Manual

*2 Do not use the local device set in a MELSEC-Q system.
Doing so disables the correct monitoring.

*3 When monitoring MELDAS C6/C64, if a word device outside the range is set, the value will be indefinite.
If a bit device outside the range is set, the object may not be displayed or the set function may fail to operate.
Check the set device using the device list of GT Designer3.

*4 Devices used by the MELDAS C6/C64 system cannot be used.

Availability of writing/reading data to/from bit devices ([MELSEC QnA, MELDAS C6*])

The following shows whether writing/reading data to/from bit devices is available by device type.

When the device type is other than the bit type, set the device No. in multiples of 16.

R/W: Both read and write

R/-: Read only

-/W: Write only

-/-: No read/write access

Device name	Device type				
	Bit	Byte (8 bits)	Word (16 bits)	Double-word (32 bits)	Quad-word (64 bits)
X	R/W	-/-	R/W	R/W	-/-
Y	R/W	-/-	R/W	R/W	-/-
B	R/W	-/-	R/W	R/W	-/-
M	R/W	-/-	R/W	R/W	-/-
L	R/W	-/-	R/W	R/W	-/-
S	R/W	-/-	R/W	R/W	-/-
F	R/W	-/-	R/W	R/W	-/-
TC	R/W	-/-	-/-	-/-	-/-
TT	R/W	-/-	-/-	-/-	-/-
CC	R/W	-/-	-/-	-/-	-/-
CT	R/W	-/-	-/-	-/-	-/-
SC	R/W	-/-	-/-	-/-	-/-
SS	R/W	-/-	-/-	-/-	-/-
SB	R/W	-/-	R/W	R/W	-/-
SM	R/W	-/-	R/W	R/W	-/-
RX	R/W	-/-	R/W	R/W	-/-
RY	R/W	-/-	R/W	R/W	-/-
LB	R/W	-/-	R/W	R/W	-/-

Monitoring-supported word devices ([MELSEC QnA, MELDAS C6*])

The following table shows monitoring-supported word devices.

To check whether writing/reading data to/from each device is available, refer to the following.

☞ Page 1517 Availability of writing/reading data to/from word devices ([MELSEC QnA, MELDAS C6*])

○: Available

×: Not available

Device name *9*10		Device No. representation	Setting range		Specifications of EG devices*1	
			GT27, GT25, GT23, SoftGOT2000, and GS25	GT21 and GS21	Assignment to EG devices	Access using a client
TN *6	Timer current value	Decimal	0 to 32767	0 to 32767	○	○
CN *6	Counter current value	Decimal	0 to 32767	0 to 32767	○	○
SN *6	Retentive timer current value	Decimal	0 to 32767	0 to 32767	○	○
D *6	Data register	Decimal	0 to 32767	0 to 32767	○	○
SD	Special register	Decimal	0 to 2047	0 to 2047	○	○
W	Link register	Hexadecimal	0000 to 7FFF	0000 to 7FFF	○	○
SW	Link special register	Hexadecimal	0000 to 07FF	0000 to 07FF	○	○
R *2*3*5	File register	Decimal	0 to 32767	0 to 32767	○	○
ER *2*7	Extension file register(Block)	Decimal	ER(R block)-(Device) Notation example: ER255-100 • R block (decimal): 0 to 255 • Device (decimal): 0 to 32767	-	○	○
ZR *2*4*5*7	Extension file register	Decimal	0 to 1042431	-	○	○
Z	Index register	Decimal	0 to 15	0 to 15	○	○ (Not usable as bit data)
G *7*8	Buffer memory (Intelligent function module)	Decimal	U(Unit No.)-G(Device) Notation example: UFF-G100 • Unit No. (hexadecimal): 00 to FF • Device (decimal): 0 to 65535	-	○	○
Ww *7	Remote register	Hexadecimal	0000 to 1FFF	-	○	○
Wr *7	Remote register	Hexadecimal	0000 to 1FFF	-	○	○
LW	Link register	Hexadecimal	00000 to 1FFFF	-	○	○

*1 For the devices assigned to EG devices (gateway devices) and the compatible clients, refer to the following.
[📖]GT Designer3 (GOT2000) Screen Design Manual

*2 Do not set a file register by GT Designer3 when executing multiple programs with the file of the file register set at [Use the same file name as the program.] by the PLC parameter of GX Developer.
(With exceptions of MELSEC-QnA)
Otherwise, read or write at GOT will be erroneous.

*3 Available for the file register of block No. switched with the RSET instruction.

*4 Available for the file register of block number of file name switched with the QDRSET instruction.

*5 Set a value within the range of registers that exist in the PLC

*6 Do not use the local device set in a MELSEC-Q system.
Doing so disables the correct monitoring.

*7 This cannot be monitored when the GOT multi-drop is connected.

*8 Only the intelligent function module on the station connected to GOT can be specified.
Set the buffer memory within the address range of the buffer memory existing in the intelligent function module.

*9 When monitoring MELDAS C6/C64, if a word device outside the range is set, the value will be indefinite.
If a bit device outside the range is set, the object may not be displayed or the set function may fail to operate.
Check the set device using the device list of GT Designer3.

*10 Devices used by the MELDAS C6/C64 system cannot be used.

Availability of writing/reading data to/from word devices ([MELSEC QnA, MELDAS C6*])

The following shows the availability of writing/reading data to/from word devices by device type.

R/W: Both read and write

R/-: Read only

-/W: Write only

-/-: No read/write access

Device name	Device type			
	Word (16 bits)	Double-word (32 bits)	Quad-word (64 bits)	Bit of word data
TN	R/W	R/W	-/-	-/-
CN	R/W	R/W	-/-	-/-
SN	R/W	R/W	-/-	-/-
D	R/W	R/W	-/-	R/W
SD	R/W	R/W	-/-	R/W
W	R/W	R/W	-/-	R/W
SW	R/W	R/W	-/-	R/W
R	R/W	R/W	-/-	R/W
ER	R/W	R/W	-/-	R/W
ZR	R/W	R/W	-/-	R/W
Z	R/W	R/W	-/-	-/-
G	R/W	R/W	-/-	R/W
Ww	R/W	R/W	-/-	R/W
Wr	R/W	R/W	-/-	R/W
LW	R/W	R/W	-/-	R/W

A

[MELSEC-L]

GT 27 GT 25 GT 23 GT 21 GS 25 GS 21

Item	Reference
Specifications of bit devices	☞ Page 1518 Monitoring-supported bit devices ([MELSEC-L])
	☞ Page 1520 Setting virtual bit devices for servo amplifiers ([MELSEC-L])
	☞ Page 1521 Availability of writing/reading data to/from bit devices ([MELSEC-L])
Specifications of word devices	☞ Page 1522 Monitoring-supported word devices ([MELSEC-L])
	☞ Page 1524 Setting virtual word devices for servo amplifiers ([MELSEC-L])
	☞ Page 1527 Availability of writing/reading data to/from word devices ([MELSEC-L])
Specifications of double-word devices	☞ Page 1528 Monitoring-supported double-word devices ([MELSEC-L])
	☞ Page 1529 Setting virtual double-word devices for servo amplifiers ([MELSEC-L])
	☞ Page 1530 Availability of writing/reading data to/from double-word devices ([MELSEC-L])
Specifications of virtual servo amplifier devices	☞ Page 1530 Virtual servo amplifier devices ([MELSEC-L])
	☞ Page 1531 Precautions for virtual servo amplifier devices ([MELSEC-L])
Specifications of virtual inverter devices	☞ Page 1531 Virtual inverter devices ([MELSEC-L])

Monitoring-supported bit devices ([MELSEC-L])

The following table shows monitoring-supported bit devices.

To check whether writing/reading data to/from each device is available, refer to the following.

☞ Page 1521 Availability of writing/reading data to/from bit devices ([MELSEC-L])

○: Available

×: Not available

Device name		Device No. representation	Setting range	Specifications of EG devices[*1]	
				Assignment to EG devices	Access using a client
X	Input relay	Hexadecimal	0000 to 3FFF	○	○
Y	Output relay	Hexadecimal	0000 to 3FFF	○	○
B	Link relay	Hexadecimal	0000 to EFFF	○	○
M [*4]	Internal relay	Decimal	0 to 61439	○	○
L	Latch relay	Decimal	0 to 32767	○	○
S	Step relay	Decimal	0 to 8191	○	○
F	Annunciator	Decimal	0 to 32767	○	○
TC [*4]	Timer coil	Decimal	0 to 32767	○	○ (Not usable as word data)
TT [*4]	Timer contact	Decimal	0 to 32767	○	○ (Not usable as word data)
CC [*4]	Counter coil	Decimal	0 to 32767	○	○ (Not usable as word data)
CT [*4]	Counter contact	Decimal	0 to 32767	○	○ (Not usable as word data)
SC [*4]	Retentive timer coil	Decimal	0 to 32767	○	○ (Not usable as word data)
SS [*4]	Retentive timer contact	Decimal	0 to 32767	○	○ (Not usable as word data)
SB	Link special relay	Hexadecimal	0000 to 7FFF	○	○
SM	Special relay	Decimal	0 to 2047	○	○
RX	Remote input	Hexadecimal	0000 to 3FFF	○	○
RY	Remote output	Hexadecimal	0000 to 3FFF	○	○

Device name		Device No. representation	Setting range	Specifications of EG devices*1	
				Assignment to EG devices	Access using a client
SP *2	Servo amplifier request	Decimal	☞ Page 1520 Setting virtual bit devices for servo amplifiers ([MELSEC-L])	×	×
OM *2	Operation mode selection	Decimal	☞ Page 1520 Setting virtual bit devices for servo amplifiers ([MELSEC-L])	×	×
TMB *2	Instruction demand (for test operation)	Decimal	☞ Page 1520 Setting virtual bit devices for servo amplifiers ([MELSEC-L])	×	×
OTI *2	One-touch tuning instruction	Decimal	☞ Page 1520 Setting virtual bit devices for servo amplifiers ([MELSEC-L])	×	×
IOST *3	I/O terminal monitor	Decimal	0 to 127	×	×
CMD *3	Operation command	Decimal	0 to 63	×	×

*1 For the devices assigned to EG devices (gateway devices) and the compatible clients, refer to the following.
📖GT Designer3 (GOT2000) Screen Design Manual

*2 Virtual servo amplifier device
For the details, refer to the following.
☞ Page 1530 Virtual servo amplifier devices ([MELSEC-L])

*3 Virtual inverter device
For the details, refer to the following.
☞ Page 1531 Virtual inverter devices ([MELSEC-L])

*4 Do not use the local device set in a MELSEC-L system.
Doing so disables the correct monitoring.
D32768 or later can be used for data register (D).

A

Setting virtual bit devices for servo amplifiers ([MELSEC-L])

For virtual servo amplifier devices, the notation differs according to the connection type between the GOT and the servo amplifier.

Select one of the following according to the control type in the device setting dialog.

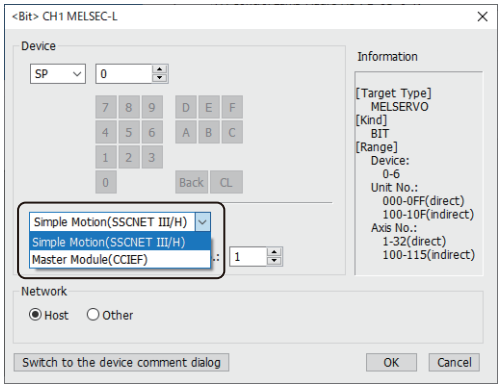

Item	Description
[Simple Motion(SSCNET III/H)]	Select this item to connect the GOT through a Simple Motion module (LD77MS). The following item is displayed. • [Unit No.]: Set the first 2 digits of the 3-digit number that represents the start I/O number of the Simple Motion module. • [Axis No.]: Set the axis number to be monitored.
[Master Module(CCIEF)]	Select this item to connect the GOT through the master station on the CC-Link IE Field Network.

The following shows the notation and setting range of virtual devices.

Device name	Device notation and setting range		Notation example
SP	[Simple Motion(SSCNET III/H)]	U(Unit No.)-A(Axis No.)-SP(Device) • Unit No. (hexadecimal): 00 to FF (direct), 100 to 10F (indirect) • Axis No. (decimal): 1 to 32 (direct), 100 to 115 (indirect) • Device (decimal): 0 to 6	UFF-A32-SP0
	[Master Module(CCIEF)]	SP(Device) • Device (decimal): 0 to 6	SP0
OM	[Simple Motion(SSCNET III/H)]	U(Unit No.)-A(Axis No.)-OM(Device) • Unit No. (hexadecimal): 00 to FF (direct), 100 to 10F (indirect) • Axis No. (decimal): 1 to 32 (direct), 100 to 115 (indirect) • Device (decimal): 0 to 2, 4 to 5	UFF-A32-OM0
	[Master Module(CCIEF)]	OM(Device) • Device (decimal): 0 to 2, 4 to 5	OM0
TMB	[Simple Motion(SSCNET III/H)]	U(Unit No.)-A(Axis No.)-TMB(Device) • Unit No. (hexadecimal): 00 to FF (direct), 100 to 10F (indirect) • Axis No. (decimal): 1 to 32 (direct), 100 to 115 (indirect) • Device (decimal): 1 to 6	UFF-A32-TMB1
	[Master Module(CCIEF)]	TMB(Device) • Device (decimal): 1 to 6	TMB1
OTI	[Simple Motion(SSCNET III/H)]	U(Unit No.)-A(Axis No.)-OTI(Device) • Unit No. (hexadecimal): 00 to FF (direct), 100 to 10F (indirect) • Axis No. (decimal): 1 to 32 (direct), 100 to 115 (indirect) • Device (decimal): 0 to 5	UFF-A32-OTI0
	[Master Module(CCIEF)]	OTI(Device) • Device (decimal): 0 to 5	OTI0

For indirect specification of a module or axis number, refer to the following.

☞ Page 1398 Indirect specification of a module number ([MELSEC iQ-R, RnMT/NC/RT, CR800-D], [MELSEC iQ-R, RnMT/RT, CR800-D])

☞ Page 1399 Indirect specification of an axis number or axis designation ([MELSEC iQ-R, RnMT/NC/RT, CR800-D], [MELSEC iQ-R, RnMT/RT, CR800-D])

Availability of writing/reading data to/from bit devices ([MELSEC-L])

The following shows whether writing/reading data to/from bit devices is available by device type.

When the device type is other than the bit type, set the device No. in multiples of 16.

R/W: Both read and write

R/-: Read only

-/W: Write only

-/-: No read/write access

Device name	Device type				
	Bit	Byte (8 bits)	Word (16 bits)	Double-word (32 bits)	Quad-word (64 bits)
X	R/W	-/-	R/W	R/W	-/-
Y	R/W	-/-	R/W	R/W	-/-
B	R/W	-/-	R/W	R/W	-/-
M	R/W	-/-	R/W	R/W	-/-
L	R/W	-/-	R/W	R/W	-/-
S	R/W	-/-	R/W	R/W	-/-
F	R/W	-/-	R/W	R/W	-/-
TC	R/W	-/-	-/-	-/-	-/-
TT	R/W	-/-	-/-	-/-	-/-
CC	R/W	-/-	-/-	-/-	-/-
CT	R/W	-/-	-/-	-/-	-/-
SC	R/W	-/-	-/-	-/-	-/-
SS	R/W	-/-	-/-	-/-	-/-
SB	R/W	-/-	R/W	R/W	-/-
SM	R/W	-/-	R/W	R/W	-/-
RX	R/W	-/-	R/W	R/W	-/-
RY	R/W	-/-	R/W	R/W	-/-
SP	-/W	-/-	-/-	-/-	-/-
OM	-/W	-/-	-/-	-/-	-/-
TMB	-/W	-/-	-/-	-/-	-/-
OTI	-/W	-/-	-/-	-/-	-/-
IOST	R/-	-/-	-/-	-/-	-/-
CMD	-/W	-/-	-/-	-/-	-/-

Monitoring-supported word devices ([MELSEC-L])

The following table shows monitoring-supported word devices.

To check whether writing/reading data to/from each device is available, refer to the following.

☞ Page 1527 Availability of writing/reading data to/from word devices ([MELSEC-L])

○: Available

×: Not available

Device name		Device No. representation	Setting range	Specifications of EG devices[*1]	
				Assignment to EG devices	Access using a client
TN [*6]	Timer current value	Decimal	0 to 32767	○	○
CN [*6]	Counter current value	Decimal	0 to 32767	○	○
SN [*6]	Retentive timer current value	Decimal	0 to 32767	○	○
D [*6]	Data register	Decimal	0 to 421887	○	○
SD	Special register	Decimal	0 to 2047	○	○
W	Link register	Hexadecimal	00000 to 66FFF	○	○
SW	Link special register	Hexadecimal	0000 to 7FFF	○	○
R [*3*4]	File register	Decimal	0 to 32767	○	○
ZR [*3*5]	Extension file register	Decimal	0 to 393215	○	○
Z	Index register	Decimal	0 to 19	○	○ (Not usable as bit data)
G	Buffer memory (Intelligent function module)	Decimal	U(Unit No.)-G(Device) Notation example: UFF-G100 • Unit No. (hexadecimal): 00 to FF • Device (decimal): 0 to 65535 For the unit No., set the first 2 digits of the 3-digit number that represents the start I/O number of the buffer memory for the intelligent function module.	○	○
Ww [*7]	Remote register	Hexadecimal	0000 to 1FFF	○	○
Wr [*7]	Remote register	Hexadecimal	0000 to 1FFF	○	○
PA [*2]	Basic parameter	Decimal	☞ Page 1524 Setting virtual word devices for servo amplifiers ([MELSEC-L])	×	×
PB [*2]	Gain filter parameter	Decimal	☞ Page 1524 Setting virtual word devices for servo amplifiers ([MELSEC-L])	×	×
PC [*2]	Extension setting parameter	Decimal	☞ Page 1524 Setting virtual word devices for servo amplifiers ([MELSEC-L])	×	×
PD [*2]	I/O setting parameter	Decimal	☞ Page 1524 Setting virtual word devices for servo amplifiers ([MELSEC-L])	×	×
PT [*2]	Positioning control parameter	Decimal	☞ Page 1524 Setting virtual word devices for servo amplifiers ([MELSEC-L])	×	×
PL [*2]	Linear servo motor/DD motor setting parameter	Decimal	☞ Page 1524 Setting virtual word devices for servo amplifiers ([MELSEC-L])	×	×
PN [*2]	Network setting parameter	Decimal	☞ Page 1524 Setting virtual word devices for servo amplifiers ([MELSEC-L])	×	×
ST [*2*7]	Status display	Decimal	☞ Page 1524 Setting virtual word devices for servo amplifiers ([MELSEC-L])	×	×
PE [*2]	Extension setting No.2 parameter	Decimal	☞ Page 1524 Setting virtual word devices for servo amplifiers ([MELSEC-L])	×	×
PF [*2]	Extension setting No.3 parameter	Decimal	☞ Page 1524 Setting virtual word devices for servo amplifiers ([MELSEC-L])	×	×
ALM [*2*7]	Alarm (current alarm J4A extend)	Decimal	☞ Page 1524 Setting virtual word devices for servo amplifiers ([MELSEC-L])	×	×
ALM [*2*7]	Alarm (alarm history J4A extend)	Decimal	☞ Page 1524 Setting virtual word devices for servo amplifiers ([MELSEC-L])	×	×
POS [*2]	Point table (position)	Decimal	☞ Page 1524 Setting virtual word devices for servo amplifiers ([MELSEC-L])	×	×
SPD [*2]	Point table (speed)	Decimal	☞ Page 1524 Setting virtual word devices for servo amplifiers ([MELSEC-L])	×	×

Device name		Device No. representation	Setting range	Specifications of EG devices*1	
				Assignment to EG devices	Access using a client
ACT *2	Point table (acceleration time constant)	Decimal	☞ Page 1524 Setting virtual word devices for servo amplifiers ([MELSEC-L])	×	×
DCT *2	Point table (deceleration time constant)	Decimal	☞ Page 1524 Setting virtual word devices for servo amplifiers ([MELSEC-L])	×	×
DWL *2	Point table (dwell)	Decimal	☞ Page 1524 Setting virtual word devices for servo amplifiers ([MELSEC-L])	×	×
AUX *2	Point table (auxiliary function)	Decimal	☞ Page 1524 Setting virtual word devices for servo amplifiers ([MELSEC-L])	×	×
MD *2*7	Machine diagnosis data	Decimal	☞ Page 1524 Setting virtual word devices for servo amplifiers ([MELSEC-L])	×	×
OTS *2*7	One-touch tuning data	Decimal	☞ Page 1524 Setting virtual word devices for servo amplifiers ([MELSEC-L])	×	×
DI *2	External input signal	Decimal	☞ Page 1524 Setting virtual word devices for servo amplifiers ([MELSEC-L])	×	×
DO *2*7	External output signal	Decimal	☞ Page 1524 Setting virtual word devices for servo amplifiers ([MELSEC-L])	×	×

*1 For the devices assigned to EG devices (gateway devices) and the compatible clients, refer to the following.
📖GT Designer3 (GOT2000) Screen Design Manual

*2 Virtual servo amplifier device
For the details, refer to the following.
☞ Page 1530 Virtual servo amplifier devices ([MELSEC-L])

*3 Do not set a file register by GT Designer3 when executing multiple programs with the file of the file register set at [Use the same file name as the program.] by the PLC parameter of GX Developer.
Otherwise, read or write at GOT will be erroneous.

*4 Available for the file register of block No. switched with the RSET instruction.

*5 Available for the file register of block number of file name switched with the QDRSET instruction.

*6 Do not use the local device set in a MELSEC-L system.
Doing so disables the correct monitoring.
D32768 or later can be used for data register (D).

*7 This cannot be monitored when the GOT multi-drop is connected.

A

Setting virtual word devices for servo amplifiers ([MELSEC-L])

For virtual servo amplifier devices, the notation differs according to the connection type between the GOT and the servo amplifier.

Select one of the following according to the control type in the device setting dialog.

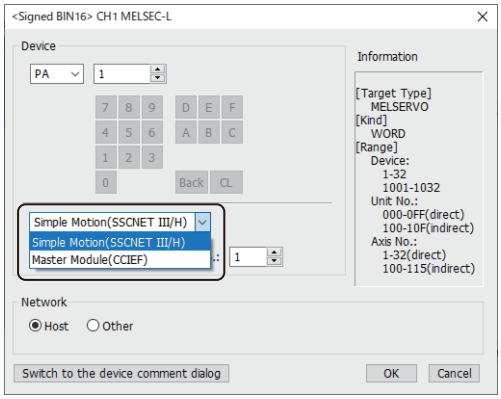

Item	Description
[Simple Motion(SSCNET III/H)]	Select this item to connect the GOT through a Simple Motion module (LD77MS). The following item is displayed. • [Unit No.]: Set the first 2 digits of the 3-digit number that represents the start I/O number of the Simple Motion module. • [Axis No.]: Set the axis number to be monitored.
[Master Module(CCIEF)]	Select this item to connect the GOT through the master station on the CC-Link IE Field Network.

The following shows the notation and setting range of virtual devices.

Device name	Device notation and setting range		Notation example
PA	[Simple Motion(SSCNET III/H)]	U(Unit No.)-A(Axis No.)-PA(Device) • Unit No. (hexadecimal): 00 to FF (direct), 100 to 10F (indirect) • Axis No. (decimal): 1 to 32 (direct), 100 to 115 (indirect) • Device (decimal): 1 to 32, 1001 to 1032	UFF-A32-PA1
	[Master Module(CCIEF)]	PA(Device) • Device (decimal): 1 to 32, 1001 to 1032	PA1
PB	[Simple Motion(SSCNET III/H)]	U(Unit No.)-A(Axis No.)-PB(Device) • Unit No. (hexadecimal): 00 to FF (direct), 100 to 10F (indirect) • Axis No. (decimal): 1 to 32 (direct), 100 to 115 (indirect) • Device (decimal): 1 to 64, 1001 to 1064	UFF-A32-PB1
	[Master Module(CCIEF)]	PB(Device) • Device (decimal): 1 to 64, 1001 to 1064	PB1
PC	[Simple Motion(SSCNET III/H)]	U(Unit No.)-A(Axis No.)-PC(Device) • Unit No. (hexadecimal): 00 to FF (direct), 100 to 10F (indirect) • Axis No. (decimal): 1 to 32 (direct), 100 to 115 (indirect) • Device (decimal): 1 to 80, 1001 to 1080	UFF-A32-PC1
	[Master Module(CCIEF)]	PC(Device) • Device (decimal): 1 to 80, 1001 to 1080	PC1
PD	[Simple Motion(SSCNET III/H)]	U(Unit No.)-A(Axis No.)-PD(Device) • Unit No. (hexadecimal): 00 to FF (direct), 100 to 10F (indirect) • Axis No. (decimal): 1 to 32 (direct), 100 to 115 (indirect) • Device (decimal): 1 to 48, 1001 to 1048	UFF-A32-PD1
	[Master Module(CCIEF)]	PD(Device) • Device (decimal): 1 to 48, 1001 to 1048	PD1
PT	[Master Module(CCIEF)]	PT(Device) • Device (decimal): 1 to 80, 1001 to 1080	PT1
PL	[Simple Motion(SSCNET III/H)]	U(Unit No.)-A(Axis No.)-PL(Device) • Unit No. (hexadecimal): 00 to FF (direct), 100 to 10F (indirect) • Axis No. (decimal): 1 to 32 (direct), 100 to 115 (indirect) • Device (decimal): 1 to 48, 1001 to 1048	UFF-A32-PL1
	[Master Module(CCIEF)]	PL(Device) • Device (decimal): 1 to 48, 1001 to 1048	PL1

Device name	Device notation and setting range		Notation example
PN	[Master Module(CCIEF)]	PN(Device) • Device (decimal): 1 to 32, 1001 to 1032	PN1
ST	[Simple Motion(SSCNET III/H)]	U(Unit No.)-A(Axis No.)-ST(Device) • Unit No. (hexadecimal): 00 to FF (direct), 100 to 10F (indirect) • Axis No. (decimal): 1 to 32 (direct), 100 to 115 (indirect) • Device (decimal): 0 to 48	UFF-A32-ST0
	[Master Module(CCIEF)]	ST(Device) • Device (decimal): 0 to 48	ST0
PE	[Simple Motion(SSCNET III/H)]	U(Unit No.)-A(Axis No.)-PE(Device) • Unit No. (hexadecimal): 00 to FF (direct), 100 to 10F (indirect) • Axis No. (decimal): 1 to 32 (direct), 100 to 115 (indirect) • Device (decimal): 1 to 64, 1001 to 1064	UFF-A32-PE1
	[Master Module(CCIEF)]	PE(Device) • Device (decimal): 1 to 64, 1001 to 1064	PE1
PF	[Simple Motion(SSCNET III/H)]	U(Unit No.)-A(Axis No.)-PF(Device) • Unit No. (hexadecimal): 00 to FF (direct), 100 to 10F (indirect) • Axis No. (decimal): 1 to 32 (direct), 100 to 115 (indirect) • Device (decimal): 1 to 64, 1001 to 1064	UFF-A32-PF1
	[Master Module(CCIEF)]	PF(Device) • Device (decimal): 1 to 64, 1001 to 1064	PF1
ALM	[Simple Motion(SSCNET III/H)]	U(Unit No.)-A(Axis No.)-ALM(Device) • Unit No. (hexadecimal): 00 to FF (direct), 100 to 10F (indirect) • Axis No. (decimal): 1 to 32 (direct), 100 to 115 (indirect) • Device (decimal): 0 to 1, 11 to 59, 200 to 215, 220 to 235, 240 to 255	UFF-A32-ALM0
	[Master Module(CCIEF)]	ALM(Device) • Device (decimal): 0 to 1, 11 to 59, 200 to 215, 220 to 235, 240 to 255	ALM0
POS	[Master Module(CCIEF)]	POS(Device) • Device (decimal): 1 to 255, 1001 to 1255	POS1
SPD	[Master Module(CCIEF)]	SPD(Device) • Device (decimal): 1 to 255, 1001 to 1255	SPD1
ACT	[Master Module(CCIEF)]	ACT(Device) • Device (decimal): 1 to 255, 1001 to 1255	ACT1
DCT	[Master Module(CCIEF)]	DCT(Device) • Device (decimal): 1 to 255, 1001 to 1255	DCT1
DWL	[Master Module(CCIEF)]	DWL(Device) • Device (decimal): 1 to 255, 1001 to 1255	DWL1
AUX	[Master Module(CCIEF)]	AUX(Device) • Device (decimal): 1 to 255, 1001 to 1255	AUX1
MD	[Simple Motion(SSCNET III/H)]	U(Unit No.)-A(Axis No.)-MD(Device) • Unit No. (hexadecimal): 00 to FF (direct), 100 to 10F (indirect) • Axis No. (decimal): 1 to 32 (direct), 100 to 115 (indirect) • Device (decimal): 0 to 18	UFF-A32-MD0
	[Master Module(CCIEF)]	MD(Device) • Device (decimal): 0 to 18	MD0
OTS	[Simple Motion(SSCNET III/H)]	U(Unit No.)-A(Axis No.)-OTS(Device) • Unit No. (hexadecimal): 00 to FF (direct), 100 to 10F (indirect) • Axis No. (decimal): 1 to 32 (direct), 100 to 115 (indirect) • Device (decimal): 0 to 3	UFF-A32-OTS0
	[Master Module(CCIEF)]	OTS(Device) • Device (decimal): 0 to 3	OTS0
DI	[Simple Motion(SSCNET III/H)]	U(Unit No.)-A(Axis No.)-DI(Device) • Unit No. (hexadecimal): 00 to FF (direct), 100 to 10F (indirect) • Axis No. (decimal): 1 to 32 (direct), 100 to 115 (indirect) • Device (decimal): 0 to 6	UFF-A32-DI0
	[Master Module(CCIEF)]	DI(Device) • Device (decimal): 0 to 6	DI0

Device name	Device notation and setting range		Notation example
DO	[Simple Motion(SSCNET III/H)]	U(Unit No.)-A(Axis No.)-DO(Device) • Unit No. (hexadecimal): 00 to FF (direct), 100 to 10F (indirect) • Axis No. (decimal): 1 to 32 (direct), 100 to 115 (indirect) • Device (decimal): 0 to 4	UFF-A32-DO0
	[Master Module(CCIEF)]	DO(Device) • Device (decimal): 0 to 4	DO0

For indirect specification of a module or axis number, refer to the following.

☞ Page 1398 Indirect specification of a module number ([MELSEC iQ-R, RnMT/NC/RT, CR800-D], [MELSEC iQ-R, RnMT/RT, CR800-D])

☞ Page 1399 Indirect specification of an axis number or axis designation ([MELSEC iQ-R, RnMT/NC/RT, CR800-D], [MELSEC iQ-R, RnMT/RT, CR800-D])

Availability of writing/reading data to/from word devices ([MELSEC-L])

The following shows the availability of writing/reading data to/from word devices by device type.

R/W: Both read and write

R/-: Read only

-/W: Write only

-/-: No read/write access

Device name	Device type			
	Word (16 bits)	Double-word (32 bits)	Quad-word (64 bits)	Bit of word data
TN	R/W	R/W	-/-	-/-
CN	R/W	R/W	-/-	-/-
SN	R/W	R/W	-/-	-/-
D	R/W	R/W	R/W	R/W
SD	R/W	R/W	R/W	R/W
W	R/W	R/W	R/W	R/W
SW	R/W	R/W	-/-	R/W
R	R/W	R/W	R/W	R/W
ZR	R/W	R/W	R/W	R/W
Z	R/W	R/W	-/-	-/-
G	R/W	R/W	R/W	R/W
Ww	R/W	R/W	R/W	R/W
Wr	R/W	R/W	R/W	R/W
PA	R/W	R/W	-/-	-/-
PB	R/W	R/W	-/-	-/-
PC	R/W	R/W	-/-	-/-
PD	R/W	R/W	-/-	-/-
PT	R/W	R/W	-/-	-/-
PL	R/W	R/W	-/-	-/-
PN	R/W	R/W	-/-	-/-
ST	R/-	R/-	-/-	-/-
PE	R/W	R/W	-/-	-/-
PF	R/W	R/W	-/-	-/-
ALM	R/-	R/-	-/-	-/-
POS	R/W	R/W	-/-	-/-
SPD	R/W	R/W	-/-	-/-
ACT	R/W	R/W	-/-	-/-
DCT	R/W	R/W	-/-	-/-
DWL	R/W	R/W	-/-	-/-
AUX	R/W	R/W	-/-	-/-
MD	R/-	R/-	-/-	-/-
OTS	R/-	R/-	-/-	-/-
DI	R/-	R/W	-/-	-/-
DO	R/-	R/-	-/-	-/-

Monitoring-supported double-word devices ([MELSEC-L])

The following table shows monitoring-supported double-word devices.

To check whether writing/reading data to/from each device is available, refer to the following.

☞ Page 1530 Availability of writing/reading data to/from double-word devices ([MELSEC-L])

○: Available

×: Not available

Device name		Device No. representation	Setting range	Specifications of EG devices*1	
				Assignment to EG devices	Access using a client
ALD*2	Life diagnosis	Decimal	☞ Page 1529 Setting virtual double-word devices for servo amplifiers ([MELSEC-L])	×	×
TMI*2	Input signal for test operation (for test operation)	Decimal	☞ Page 1529 Setting virtual double-word devices for servo amplifiers ([MELSEC-L])	×	×
TMO*2	Forced output of signal pin (for test operation)	Decimal	☞ Page 1529 Setting virtual double-word devices for servo amplifiers ([MELSEC-L])	×	×
TMD*2	Set data (for test operation)	Decimal	☞ Page 1529 Setting virtual double-word devices for servo amplifiers ([MELSEC-L])	×	×
AL*3	Faults history	Decimal	0 to 899	×	×
LPr*3	Parameter (32-bit)	Decimal	0 to 1500	×	×
OP*3	Operation parameter	Decimal	0 to 5	×	×
PV*3	Current value monitor	Decimal	1 to 143	×	×

*1 For the devices assigned to EG devices (gateway devices) and the compatible clients, refer to the following.
📖GT Designer3 (GOT2000) Screen Design Manual

*2 Virtual servo amplifier device
For the details, refer to the following.
☞ Page 1530 Virtual servo amplifier devices ([MELSEC-L])

*3 Virtual inverter device
For the details, refer to the following.
☞ Page 1531 Virtual inverter devices ([MELSEC-L])

Setting virtual double-word devices for servo amplifiers ([MELSEC-L])

For virtual servo amplifier devices, the notation differs according to the connection type between the GOT and the servo amplifier.

Select one of the following according to the control type in the device setting dialog.

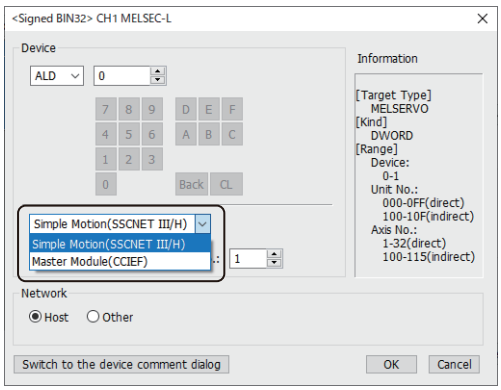

Item	Description
[Simple Motion(SSCNET III/H)]	Select this item to connect the GOT through a Simple Motion module (LD77MS). The following item is displayed. • [Unit No.]: Set the first 2 digits of the 3-digit number that represents the start I/O number of the Simple Motion module. • [Axis No.]: Set the axis number to be monitored.
[Master Module(CCIEF)]	Select this item to connect the GOT through the master station on the CC-Link IE Field Network.

The following shows the notation and setting range of virtual devices.

Device name	Device notation and setting range		Notation example
ALD	[Simple Motion(SSCNET III/H)]	U(Unit No.)-A(Axis No.)-ALD(Device) • Unit No. (hexadecimal): 00 to FF (direct), 100 to 10F (indirect) • Axis No. (decimal): 1 to 32 (direct), 100 to 115 (indirect) • Device (decimal): 0 to 1	UFF-A32-ALD0
	[Master Module(CCIEF)]	ALD(Device) • Device (decimal): 0 to 1	ALD0
TMI	[Simple Motion(SSCNET III/H)]	U(Unit No.)-A(Axis No.)-TMI(Device) • Unit No. (hexadecimal): 00 to FF (direct), 100 to 10F (indirect) • Axis No. (decimal): 1 to 32 (direct), 100 to 115 (indirect) • Device (decimal): 0 to 2	UFF-A32-TMI0
	[Master Module(CCIEF)]	TMI(Device) • Device (decimal): 0 to 2	TMI0
TMO	[Simple Motion(SSCNET III/H)]	U(Unit No.)-A(Axis No.)-TMO(Device) • Unit No. (hexadecimal): 00 to FF (direct), 100 to 10F (indirect) • Axis No. (decimal): 1 to 32 (direct), 100 to 115 (indirect) • Device (decimal): 0	UFF-A32-TMO0
	[Master Module(CCIEF)]	TMO(Device) • Device (decimal): 0	TMO0
TMD	[Simple Motion(SSCNET III/H)]	U(Unit No.)-A(Axis No.)-TMD(Device) • Unit No. (hexadecimal): 00 to FF (direct), 100 to 10F (indirect) • Axis No. (decimal): 1 to 32 (direct), 100 to 115 (indirect) • Device (decimal): 0 to 1, 3	UFF-A32-TMD0
	[Master Module(CCIEF)]	TMD(Device) • Device (decimal): 0 to 1, 3	TMD0

For indirect specification of a module or axis number, refer to the following.

☞ Page 1398 Indirect specification of a module number ([MELSEC iQ-R, RnMT/NC/RT, CR800-D], [MELSEC iQ-R, RnMT/RT, CR800-D])

☞ Page 1399 Indirect specification of an axis number or axis designation ([MELSEC iQ-R, RnMT/NC/RT, CR800-D], [MELSEC iQ-R, RnMT/RT, CR800-D])

Availability of writing/reading data to/from double-word devices ([MELSEC-L])

The following shows the availability of writing/reading data to/from double-word devices by device type.

R/W: Both read and write

R/-: Read only

-/W: Write only

-/-: No read/write access

Device name	Device type			
	Word (16 bits)	Double-word (32 bits)	Quad-word (64 bits)	Bit of double-word data
ALD	-/-	R/-	-/-	-/-
TMI	-/-	-/W	-/-	-/-
TMO	-/-	-/W	-/-	-/-
TMD	-/-	-/W	-/-	-/-
AL	-/-	R/-	-/-	-/-
LPr	-/-	R/W	-/-	-/-
OP	-/-	R/W	-/-	-/-
PV	-/-	R/-	-/-	-/-

Virtual servo amplifier devices ([MELSEC-L])

The following shows the correspondence between the virtual devices used in the GOT and the servo amplifier data.

Virtual device name	Reference
SP	☞ Page 1418 Servo amplifier request ([MELSEC iQ-R, RnMT/NC/RT, CR800-D], [MELSEC iQ-R, RnMT/RT, CR800-D])
OM	☞ Page 1418 Operation mode selection ([MELSEC iQ-R, RnMT/NC/RT, CR800-D], [MELSEC iQ-R, RnMT/RT, CR800-D])
TMB	☞ Page 1419 Instruction demand (for test operation) ([MELSEC iQ-R, RnMT/NC/RT, CR800-D], [MELSEC iQ-R, RnMT/RT, CR800-D])
OTI	☞ Page 1419 One-touch tuning instruction ([MELSEC iQ-R, RnMT/NC/RT, CR800-D], [MELSEC iQ-R, RnMT/RT, CR800-D])
PA	☞ Page 1421 Basic parameter ([MELSEC iQ-R, RnMT/NC/RT, CR800-D], [MELSEC iQ-R, RnMT/RT, CR800-D])
PB	☞ Page 1423 Gain filter parameter ([MELSEC iQ-R, RnMT/NC/RT, CR800-D], [MELSEC iQ-R, RnMT/RT, CR800-D])
PC	☞ Page 1427 Extension setting parameter ([MELSEC iQ-R, RnMT/NC/RT, CR800-D], [MELSEC iQ-R, RnMT/RT, CR800-D])
PD	☞ Page 1430 I/O setting parameter ([MELSEC iQ-R, RnMT/NC/RT, CR800-D], [MELSEC iQ-R, RnMT/RT, CR800-D])
PT	☞ Page 1433 Positioning control parameter ([MELSEC iQ-R, RnMT/NC/RT, CR800-D], [MELSEC iQ-R, RnMT/RT, CR800-D])
PL	☞ Page 1436 Motor extension parameter, linear servo motor/DD motor setting parameter ([MELSEC iQ-R, RnMT/NC/RT, CR800-D], [MELSEC iQ-R, RnMT/RT, CR800-D])
PN	☞ Page 1437 Network setting parameter ([MELSEC iQ-R, RnMT/NC/RT, CR800-D], [MELSEC iQ-R, RnMT/RT, CR800-D])
ST	☞ Page 1439 Status display ([MELSEC iQ-R, RnMT/NC/RT, CR800-D], [MELSEC iQ-R, RnMT/RT, CR800-D])
PE	☞ Page 1441 Extension setting No.2 parameter ([MELSEC iQ-R, RnMT/NC/RT, CR800-D], [MELSEC iQ-R, RnMT/RT, CR800-D])
PF	☞ Page 1443 Extension setting No.3 parameter ([MELSEC iQ-R, RnMT/NC/RT, CR800-D], [MELSEC iQ-R, RnMT/RT, CR800-D])
ALM	☞ Page 1447 Alarm ([MELSEC iQ-R, RnMT/NC/RT, CR800-D], [MELSEC iQ-R, RnMT/RT, CR800-D])
POS	☞ Page 1456 Point table (position) ([MELSEC iQ-R, RnMT/NC/RT, CR800-D], [MELSEC iQ-R, RnMT/RT, CR800-D])
SPD	☞ Page 1456 Point table (speed) ([MELSEC iQ-R, RnMT/NC/RT, CR800-D], [MELSEC iQ-R, RnMT/RT, CR800-D])
ACT	☞ Page 1457 Point table (acceleration time constant) ([MELSEC iQ-R, RnMT/NC/RT, CR800-D], [MELSEC iQ-R, RnMT/RT, CR800-D])
DCT	☞ Page 1457 Point table (deceleration time constant) ([MELSEC iQ-R, RnMT/NC/RT, CR800-D], [MELSEC iQ-R, RnMT/RT, CR800-D])
DWL	☞ Page 1457 Point table (dwell) ([MELSEC iQ-R, RnMT/NC/RT, CR800-D], [MELSEC iQ-R, RnMT/RT, CR800-D])
AUX	☞ Page 1458 Point table (auxiliary function) ([MELSEC iQ-R, RnMT/NC/RT, CR800-D], [MELSEC iQ-R, RnMT/RT, CR800-D])
MD	☞ Page 1459 Machine diagnosis data ([MELSEC iQ-R, RnMT/NC/RT, CR800-D], [MELSEC iQ-R, RnMT/RT, CR800-D])
OTS	☞ Page 1461 One-touch tuning data ([MELSEC iQ-R, RnMT/NC/RT, CR800-D], [MELSEC iQ-R, RnMT/RT, CR800-D])
DI	☞ Page 1462 External input signal in MR-J5-G(-RJ) and MR-J5W□-G ([MELSEC iQ-R, RnMT/NC/RT, CR800-D], [MELSEC iQ-R, RnMT/RT, CR800-D])
DO	☞ Page 1464 External output signal in MR-J5-G(-RJ) and MR-J5W□-G ([MELSEC iQ-R, RnMT/NC/RT, CR800-D], [MELSEC iQ-R, RnMT/RT, CR800-D])
ALD	☞ Page 1466 Life Diagnosis ([MELSEC iQ-R, RnMT/NC/RT, CR800-D], [MELSEC iQ-R, RnMT/RT, CR800-D])

Virtual device name	Reference
TMI	☞ Page 1466 Input signal for test operation (for test operation) ([MELSEC iQ-R, RnMT/NC/RT, CR800-D], [MELSEC iQ-R, RnMT/RT, CR800-D])
TMO	☞ Page 1467 Forced output of signal pin (for test operation) ([MELSEC iQ-R, RnMT/NC/RT, CR800-D], [MELSEC iQ-R, RnMT/RT, CR800-D])
TMD	☞ Page 1467 Set data (for test operation) ([MELSEC iQ-R, RnMT/NC/RT, CR800-D], [MELSEC iQ-R, RnMT/RT, CR800-D])

Precautions for virtual servo amplifier devices ([MELSEC-L])

For the precautions for virtual servo amplifier devices, refer to the following.

☞ Page 1468 Precautions for virtual servo amplifier devices ([MELSEC iQ-R, RnMT/NC/RT, CR800-D], [MELSEC iQ-R, RnMT/RT, CR800-D])

Virtual inverter devices ([MELSEC-L])

The following shows the correspondence between the virtual devices used in the GOT and the inverter data.

Virtual device name	Reference
IOST	☞ Page 1469 I/O terminal monitor ([MELSEC iQ-R, RnMT/NC/RT, CR800-D], [MELSEC iQ-R, RnMT/RT, CR800-D])
CMD	☞ Page 1471 Operation command ([MELSEC iQ-R, RnMT/NC/RT, CR800-D], [MELSEC iQ-R, RnMT/RT, CR800-D])
AL	☞ Page 1472 Faults history ([MELSEC iQ-R, RnMT/NC/RT, CR800-D], [MELSEC iQ-R, RnMT/RT, CR800-D])
LPr	☞ Page 1474 Parameter (32-bit) ([MELSEC iQ-R, RnMT/NC/RT, CR800-D], [MELSEC iQ-R, RnMT/RT, CR800-D])
OP	☞ Page 1475 Operation parameter ([MELSEC iQ-R, RnMT/NC/RT, CR800-D], [MELSEC iQ-R, RnMT/RT, CR800-D])
PV	☞ Page 1476 Current value monitor ([MELSEC iQ-R, RnMT/NC/RT, CR800-D], [MELSEC iQ-R, RnMT/RT, CR800-D])

[MELSEC-A]

GT27 GT25 GT23 GT21 GS25 GS21

Item	Reference
Specifications of bit devices	☞ Page 1532 Monitoring-supported bit devices ([MELSEC-A])
	☞ Page 1533 Availability of writing/reading data to/from bit devices ([MELSEC-A])
Specifications of word devices	☞ Page 1534 Monitoring-supported word devices ([MELSEC-A])
	☞ Page 1535 Availability of writing/reading data to/from word devices ([MELSEC-A])

Monitoring-supported bit devices ([MELSEC-A])

The following table shows monitoring-supported bit devices.

To check whether writing/reading data to/from each device is available, refer to the following.

☞ Page 1533 Availability of writing/reading data to/from bit devices ([MELSEC-A])

For monitoring-supported bit devices in the multi-drop connection, refer to the range for GT21 and GS21 in the following table.

○: Available

×: Not available

Device name		Device No. representation	Setting range		Specifications of EG devices*1	
			GT27, GT25, GT23, SoftGOT2000, and GS25	GT21 and GS21	Assignment to EG devices	Access using a client
X	Input relay	Hexadecimal	0000 to 1FFF	0000 to 1FFF	○	○
Y	Output relay	Hexadecimal	0000 to 1FFF	0000 to 1FFF	○	○
B	Link relay	Hexadecimal	0000 to 7FFF	0000 to 1FFF	○	○
M	Internal relay	Decimal	0 to 8999 9256 to 32767	0 to 8999	○	○
M*2	Special internal relay	Decimal	9000 to 9255	9000 to 9255	○	○
L	Latch relay	Decimal	0 to 32767	0 to 8191	○	○
F	Annunciator	Decimal	0 to 32767	0 to 2047	○	○
TC	Timer coil	Decimal	0 to 32767	0 to 2047	○	○ (Not usable as word data)
TT	Timer contact	Decimal	0 to 32767	0 to 2047	○	○ (Not usable as word data)
CC	Counter coil	Decimal	0 to 32767	0 to 1023	○	○ (Not usable as word data)
CT	Counter contact	Decimal	0 to 32767	0 to 1023	○	○ (Not usable as word data)
SB	Link special relay	Hexadecimal	0000 to 07FF	-	○	○
RX	Remote input	Hexadecimal	000 to 7FF	-	○	○
RY	Remote output	Hexadecimal	000 to 7FF	-	○	○
LB	Link relay	Hexadecimal	0000 to 1FFF	-	○	○

*1 For the devices assigned to EG devices (gateway devices) and the compatible clients, refer to the following.
GT Designer3 (GOT2000) Screen Design Manual

*2 If the special internal relay (M) is converted to the word device, treat 9000 of the device No. as 0 and set in multiples of 16.
Example) M9000, M9016, M9240

Availability of writing/reading data to/from bit devices ([MELSEC-A])

The following shows whether writing/reading data to/from bit devices is available by device type.

When the device type is other than the bit type, set the device No. in multiples of 16.

R/W: Both read and write

R/-: Read only

-/W: Write only

-/-: No read/write access

Device name	Device type				
	Bit	Byte (8 bits)	Word (16 bits)	Double-word (32 bits)	Quad-word (64 bits)
X	R/W	-/-	R/W	R/W	-/-
Y	R/W	-/-	R/W	R/W	-/-
B	R/W	-/-	R/W	R/W	-/-
M	R/W	-/-	R/W	R/W	-/-
L	R/W	-/-	R/W	R/W	-/-
F	R/W	-/-	R/W	R/W	-/-
TC	R/W	-/-	-/-	-/-	-/-
TT	R/W	-/-	-/-	-/-	-/-
CC	R/W	-/-	-/-	-/-	-/-
CT	R/W	-/-	-/-	-/-	-/-
SB	R/W	-/-	R/W	R/W	-/-
RX	R/W	-/-	R/W	R/W	-/-
RY	R/W	-/-	R/W	R/W	-/-
LB	R/W	-/-	R/W	R/W	-/-

A

Monitoring-supported word devices ([MELSEC-A])

The following table shows monitoring-supported word devices.

To check whether writing/reading data to/from each device is available, refer to the following.

☞ Page 1535 Availability of writing/reading data to/from word devices ([MELSEC-A])

For monitoring-supported word devices in the multi-drop connection, refer to the range for GT21 and GS21 in the following table.

○: Available

×: Not available

Device name		Device No. representation	Setting range		Specifications of EG devices*1	
			GT27, GT25, GT23, SoftGOT2000, and GS25	GT21 and GS21	Assignment to EG devices	Access using a client
TN	Timer current value	Decimal	0 to 32767	0 to 2047	○	○
CN	Counter current value	Decimal	0 to 32767	0 to 1023	○	○
D	Data register	Decimal	0 to 8999 9256 to 32767	0 to 8999	○	○
D	Special data register	Decimal	9000 to 9255	9000 to 9255	○	○
W	Link register	Hexadecimal	0000 to 7FFF	0000 to 1FFF	○	○
SW	Link special register	Hexadecimal	0000 to 07FF	-	○	○
R	File register	Decimal	0 to 32767	0 to 8191	○	○
ER	Extension file register(Block)	Decimal	ER(R block)-(Device) Notation example: ER255-100 • R block (decimal): 0 to 255 • Device (decimal): 0 to 8191	-	○	○
ZR	Extension file register	Decimal	0 to 1042431	-	○	○
Z	Index register	Decimal	0 to 6	0 to 6	○	○ (Not usable as bit data)
V	Index register	Decimal	0 to 6	0 to 6	○	○ (Not usable as bit data)
BM*2	Buffer memory (Intelligent function module)	Decimal	GM(R block)-(Device) Notation example: BMFF-100 • BM start No. (hexadecimal): 00 to FF • Device (decimal): 0 to 32767 For the BM start No., set the first 2 digits of the 3-digit number that represents the start I/O number of the buffer memory for the intelligent function module.	-	○	○ (Not usable as bit data)
Ww	Remote register	Hexadecimal	000 to 7FF	-	○	○
Wr	Remote register	Hexadecimal	000 to 7FF	-	○	○
LW	Link register	Hexadecimal	0000 to 1FFF	-	○	○
A	Accumulator	Decimal	0 to 1	0 to 1	○	○

*1 For the devices assigned to EG devices (gateway devices) and the compatible clients, refer to the following.
📖GT Designer3 (GOT2000) Screen Design Manual

*2 Only the intelligent function module on the station connected to GOT can be specified.
Set the buffer memory within the address range of the buffer memory existing in the intelligent function module.

Availability of writing/reading data to/from word devices ([MELSEC-A])

The following shows the availability of writing/reading data to/from word devices by device type.

R/W: Both read and write

R/-: Read only

-/W: Write only

-/-: No read/write access

Device name	Device type			
	Word (16 bits)	Double-word (32 bits)	Quad-word (64 bits)	Bit of word data
TN	R/W	R/W	-/-	R/W
CN	R/W	R/W	-/-	R/W
D	R/W	R/W	-/-	R/W
W	R/W	R/W	-/-	R/W
SW	R/W	R/W	-/-	R/W
R	R/W	R/W	-/-	R/W
ER*1	R/W	R/W	-/-	R/W
ZR	R/W	R/W	-/-	R/W
Z*2	R/W	R/W	-/-	-/-
V*2	R/W	R/W	-/-	R/W
BM	R/W	R/W	-/-	-/-
Ww	R/W	R/W	-/-	R/W
Wr	R/W	R/W	-/-	R/W
LW	R/W	R/W	-/-	R/W
A*3	R/W	R/W	-/-	R/W

*1 In the computer link connection, the bit specification writing of the word device to the ER29-0 (block 29 of the extension file register) or later of A3ACPU, A3UCPU, A4UCPU is not available.
When the bit specification writing of the word device is required, use the range of block No. 0 to 28.

*2 In the computer link connection, writing to the index register (such as the touch switch function and numerical input function) is not available.

*3 In the multi-drop connection (computer link connection between the CPU and the serial multi-drop connection unit), reading/writing data from/to an accumulator is not available.

A

[MELSEC-FX]

GT 27 GT 25 GT 23 GT 21 GS 25 GS 21

Item	Reference
Specifications of bit devices	☞ Page 1536 Monitoring-supported bit devices ([MELSEC-FX])
	☞ Page 1536 Availability of writing/reading data to/from bit devices ([MELSEC-FX])
Specifications of word devices	☞ Page 1537 Monitoring-supported word devices ([MELSEC-FX])
	☞ Page 1538 Setting the buffer memory device ([MELSEC-FX])
	☞ Page 1542 Availability of writing/reading data to/from word devices ([MELSEC-FX])
Protection with a keyword	☞ Page 1542 Protection using a keyword ([MELSEC-FX])

Monitoring-supported bit devices ([MELSEC-FX])

The following table shows monitoring-supported bit devices.

To check whether writing/reading data to/from each device is available, refer to the following.

☞ Page 1536 Availability of writing/reading data to/from bit devices ([MELSEC-FX])

○: Available

×: Not available

Device name		Device No. representation	Setting range	Specifications of EG devices*1	
				Assignment to EG devices	Access using a client
X	Input relay	Octal	0000 to 0377	○	○
Y	Output relay	Octal	0000 to 0377	○	○
M	Auxiliary relay	Decimal	0 to 7679	○	○
M	Special aux relay	Decimal	8000 to 8511	○	○
S	State	Decimal	0 to 4095	○	○
T	Timer contact	Decimal	0 to 511	○	○ (Not usable as word data)
C	Counter contact	Decimal	0 to 255	○	○ (Not usable as word data)

*1 For the devices assigned to EG devices (gateway devices) and the compatible clients, refer to the following.
📖GT Designer3 (GOT2000) Screen Design Manual

Availability of writing/reading data to/from bit devices ([MELSEC-FX])

The following shows whether writing/reading data to/from bit devices is available by device type.

When the device type is other than the bit type, set the device No. in multiples of 16.

R/W: Both read and write

R/-: Read only

-/W: Write only

-/-: No read/write access

Device name	Device type				
	Bit	Byte (8 bits)	Word (16 bits)	Double-word (32 bits)	Quad-word (64 bits)
X	R/W	-/-	R/W	R/W	-/-
Y	R/W	-/-	R/W	R/W	-/-
M	R/W	-/-	R/W	R/W	-/-
S	R/W	-/-	R/W	R/W	-/-
T	R/W	-/-	-/-	-/-	-/-
C	R/W	-/-	-/-	-/-	-/-

Monitoring-supported word devices ([MELSEC-FX])

The following table shows monitoring-supported word devices.

To check whether writing/reading data to/from each device is available, refer to the following.

☞ Page 1542 Availability of writing/reading data to/from word devices ([MELSEC-FX])

○: Available

×: Not available

Device name		Device No. representation	Setting range	Specifications of EG devices*1	
				Assignment to EG devices	Access using a client
T	Timer current value	Decimal	0 to 511	○	○
C*3	Counter current value	Decimal	0 to 255	○	○
D	Data register	Decimal	0 to 7999	○	○
D	Special data register	Decimal	8000 to 8511	○	○
R	Extension register	Decimal	0 to 32767	○	○
Z	Index register	Decimal	0 to 7	○	○ (Not usable as bit data)
V	Index register	Decimal	0 to 7	○	○ (Not usable as bit data)
BM*5	Buffer memory	Decimal	☞ Page 1538 Setting the buffer memory device ([MELSEC-FX])	○	○
TS*2*4*6	Timer set value	Decimal	0 to 511	○	○
CS*3*4*6	Counter set value	Decimal	0 to 255	○	○

*1 For the devices assigned to EG devices (gateway devices) and the compatible clients, refer to the following.
📖GT Designer3 (GOT2000) Screen Design Manual

*2 Only 16-bit (1-word) specification is possible.

*3 For CS0 to CS199 and C0 to C199, only 16-bit (1-word) specification is allowed.
For CS200 to CS255 and C200 to C255, only 32-bit (2-word) specification is allowed.

*4 The setting values of the timer and counter, which are not used for the program, cannot be monitored.
If monitoring is executed, a reading error occurs.

*5 Usable only for special blocks or special units compatible with FX1N, FX1NC, FX2N, FX2NC, FX3G, FX3GC, FX3U, or FX3UC.
(Except FX0N-3A, FX2N-2AD, and FX2N-2DA)

*6 GT SoftGOT2000 and GT Simulator3 cannot monitor the set values.

Setting the buffer memory device ([MELSEC-FX])

■Buffer memory format ([MELSEC-FX])

The following shows the format in the setting dialog of objects or others.

Example) Unit No.: 1, MASK: 6, Device: 100

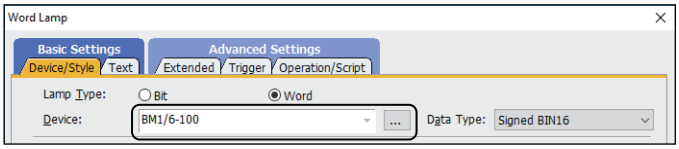

Device name	Format
Buffer memory	BM(Unit No.)/(MASK)-(Device)

The buffer memory format includes the following elements.

Item	Description	
MASK	Setting range	0 to 6
	Device No. representation	Decimal
	Explanation	Set this item when only specific bit of the buffer memory is monitored or written. When this item is 0, /(MASK) is unnecessary. For the processing corresponding to each setting value, refer to the following. ☞ Page 1539 MASK setting ([MELSEC-FX])
Unit No.	Setting range	0 to 7 (direct), 100 to 115 (indirect)
	Device No. representation	Decimal
	Explanation	Set the unit No. of the special block or special unit to be monitored or written. The unit No. (No.0 to No.7) is assigned to the unit or block in order of distance from the main unit. For the details of the unit No., refer to the following. 📖User's Manual (Hardware) of the MELSEC-FX used For indirect specification of a unit No., refer to the following. ☞ Page 1541 Indirect specification of a unit No. ([MELSEC-FX])
Device	Setting range	0 to 32767
	Device No. representation	Decimal
	Explanation	Buffer memory

■MASK setting ([MELSEC-FX])

The following shows the processing corresponding to each setting value for MASK.

MASK	Processing	
	Data type: 16-bit	**Data type: 32-bit**
0	The buffer memory value is monitored or written.	
1	Only b0 to b3 of the buffer memory is monitored or written. Example) Monitoring BM0 = 4321H with MASK 1: Monitored value = 0001H 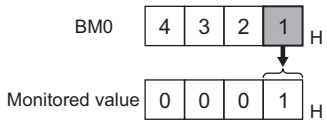 Example) Writing the input value (4321H) to BM0 = 0000H with MASK 1: BM0 = 0001H 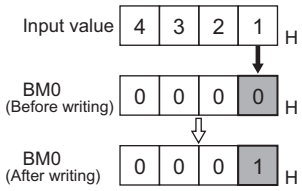 	Only b0 to b3 and b16 to b19 of the buffer memory is monitored or written. Example) Monitoring BM0 = 87654321H with MASK 1: Monitored value = 00050001H 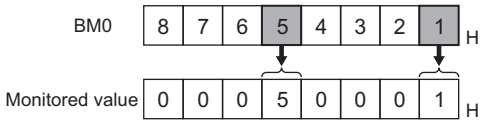 Example) Writing the input value (87654321H) to BM0 = 00000000H with MASK 1: BM0 = 00050001H 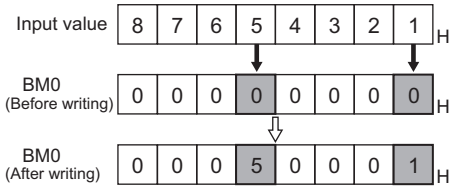
2	Only b4 to b7 of the buffer memory is monitored or written. Example) Monitoring BM0 = 4321H with MASK 2: Monitored value = 0002H 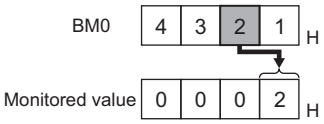 Example) Writing the input value (4321H) to BM0 = 0000H with MASK 2: BM0 = 0010H 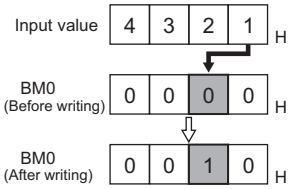 	Only b4 to b7 and b20 to b23 of the buffer memory is monitored or written. Example) Monitoring BM0 = 87654321H with MASK 2: Monitored value = 00060002H 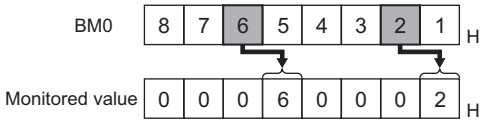 Example) Writing the input value (87654321H) to BM0 = 00000000H with MASK 2: BM0 = 00500010H 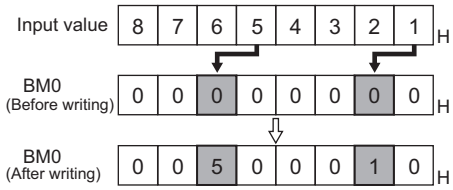

A

MASK	Processing	
	Data type: 16-bit	**Data type: 32-bit**
3	Only b8 to b11 of the buffer memory is monitored or written. Example) Monitoring BM0 = 4321H with MASK 3: Monitored value = 0003H 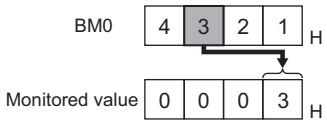 Example) Writing the input value (4321H) to BM0 = 0000H with MASK 3: BM0 = 0100H 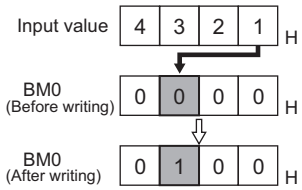 	Only b8 to b11 and b28 to b31 of the buffer memory is monitored or written. Example) Monitoring BM0 = 87654321H with MASK 3: Monitored value = 00070003H 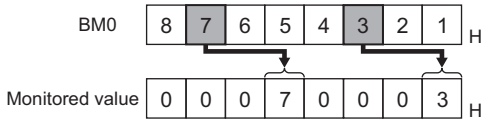 Example) Writing the input value (87654321H) to BM0 = 00000000H with MASK 3: BM0 = 00050001H 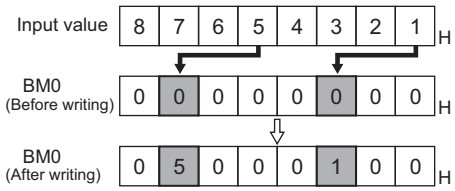
4	Only b12 to b15 of the buffer memory is monitored or written. Example) Monitoring BM0 = 4321H with MASK 4: Monitored value = 0004H 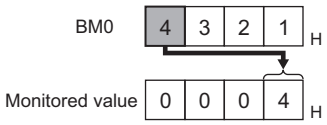 Example) Writing the input value (4321H) to BM0 = 0000H with MASK 4: BM0 = 1000H 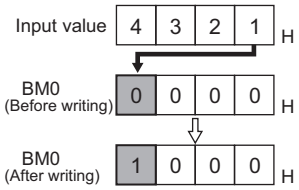 	Only b12 to b15 and b28 to b31 of the buffer memory is monitored or written. Example) Monitoring BM0 = 87654321H with MASK 4: Monitored value = 00080004H 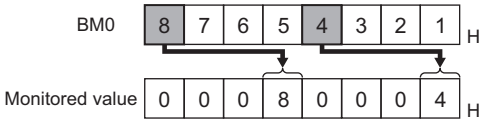 Example) Writing the input value (87654321H) to BM0=00000000H with MASK 4: BM0=50001000H 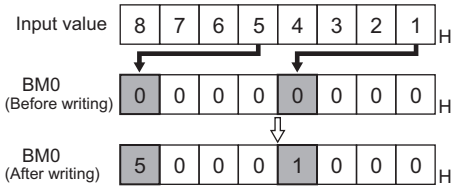
5	Only b0 to b7 of the buffer memory is monitored or written. Example) Monitoring BM0 = 4321H with MASK 5: Monitored value = 0021H 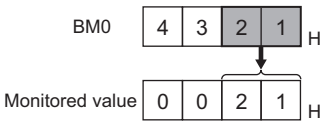 Example) Writing the input value (4321H) to BM0 = 0000H with MASK 5: BM0 = 0021H 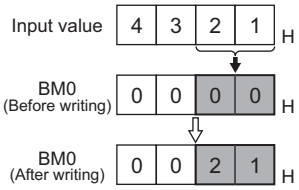 	Only b0 to b7 and b16 to b13 of the buffer memory is monitored or written. Example) Monitoring BM0 = 87654321H with MASK 5: Monitored value = 00650021H 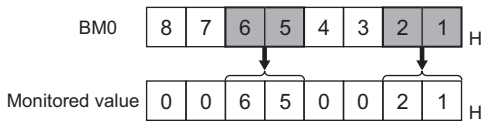 Example) Writing the input value (87654321H) to BM0=00000000H with MASK 5: BM0=00650021H 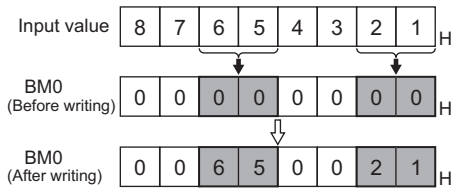

MASK	Processing	
	Data type: 16-bit	**Data type: 32-bit**
6	Only b8 to b15 of the buffer memory is monitored or written. Example) Monitoring BM0 = 4321H with MASK 6: Monitored value = 0043H 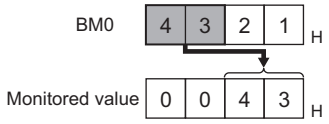 Example) Writing the input value (4321H) to BM0 = 0000H with MASK 6: BM0 = 2100H 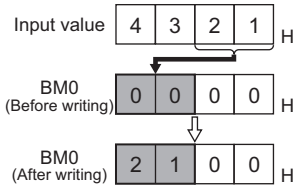 	Only b8 to b15 and b24 to b31 of the buffer memory is monitored or written. Example) Monitoring BM0 = 87654321H with MASK 6: Monitored value = 00870043H 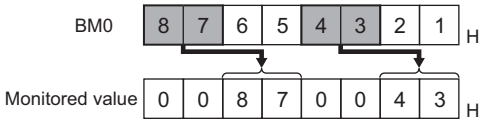 Example) Writing the input value (87654321H) to BM0=00000000H with MASK 6: BM0=65002100H 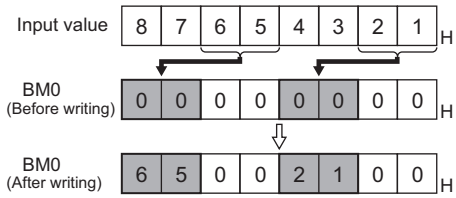

■Indirect specification of a unit No. ([MELSEC-FX])

When you specify any of 100 to 115 for the unit No., the value of the corresponding GOT internal register (GD10 to GD25) is used as the unit number of a special block or special unit.

In the multi-drop connection, indirect specification of a unit No. not available.

The following shows the correspondence between unit Nos. and GOT data registers.

Unit No.	GOT data registers (GD)	Setting range
100	GD10	[0] to [7] Setting a value outside the above range causes a device range error. If a non-existent unit No. is set, a communication timeout error occurs.
101	GD11	
:	:	
114	GD24	
115	GD25	

■Precautions for using the buffer memory

When the special block or special unit is turned off, the data in the buffer memory, except the data in some keep areas, are initialized.

When the GOT monitors the buffer memory, the scan time of the PLC may momentarily increase.

Specify 16-bit data for a 16-bit buffer memory, and specify 32-bit data for a 32-bit buffer memory.

If 16-bit data is specified for a 32-bit buffer memory, monitoring/writing may not be performed properly.

For the data size of each buffer memory, refer to the following.

📖User's Manual of the special block or special unit

When reading/writing data from/to the special block or special unit is performed by interrupting the sequence program, monitoring the buffer memory from the GOT or writing data from the GOT to the buffer memory may not be performed properly.

Availability of writing/reading data to/from word devices ([MELSEC-FX])

The following shows the availability of writing/reading data to/from word devices by device type.

R/W: Both read and write

R/-: Read only

-/W: Write only

-/-: No read/write access

Device name	Device type			
	Word (16 bits)	Double-word (32 bits)	Quad-word (64 bits)	Bit of word data*1
T	R/W	R/W	-/-	R/W
C	R/W	R/W	-/-	R/W
D	R/W	R/W	-/-	R/W
R	R/W	R/W	-/-	R/W
Z	R/W	R/W	-/-	R/W
V	R/W	-/-	-/-	R/W
BM	R/W	R/W	-/-	R/W
TS	R/W	-/-	-/-	-/-
CS	R/W	R/W	-/-	-/-

*1 When executing the touch switch function that has been set during the bit specification of the word device, do not write any data to the word device through the sequence program.

Protection using a keyword ([MELSEC-FX])

■How to select a protection level by using a keyword

You can set a protection level for equipment that is allowed to access the FX PLC online, and three protection levels are selectable.

When performing monitoring or changing settings with any on-line equipment is required, specify a keyword with referring to the following.

Registered keyword	Description
When registering a keyword only	Select a protection level by specifying an applicable letter for the initial letter in a keyword. All operations prohibited: Specify a keyword beginning with A, D to F, or 0 to 9. Incorrect write/read prohibited: Specify a keyword beginning with B. Incorrect write prohibited: Specify a keyword beginning with C.
When registering a keyword and the second keyword	Select a protection level in [Registration condition].

■Monitoring availability at each keyword protection level

The following shows the device monitoring availability at each keyword protection level.

Item		When registering a keyword only			When registering a keyword and the second keyword			Keyword not registered or protection canceled
		All operations prohibited	Incorrect write/read prohibited	Write prohibited	All online operations prohibited	Read/write prohibited	Write prohibited	
Monitoring devices		○	○	○	×	○	○	○
Changing devices	Value of T or C, and file registers (D1000 and the following)	×*1	×*1	×*1	×	○	○	○
	Other than the above	○	○	○	×	○	○	○

*1 When the value of the T or C device is set indirectly, changing the device is available.

■Difference between all online operations prohibition and all operations prohibition

When all online operations are prohibited, the programming tool and GOT cannot display devices and input data.

When all operations are prohibited, you cannot perform all operations with the programming tool, but the GOT can display devices and input data.

[MELSEC-WS]

GT 27 GT 25 GT 23 GT 21 GS 25 GS 21

Item	Reference
Specifications of bit devices	☞ Page 1543 Monitoring-supported bit devices ([MELSEC-WS])
	☞ Page 1543 Availability of writing/reading data to/from bit devices ([MELSEC-WS])
Specifications of word devices	☞ Page 1544 Monitoring-supported word devices ([MELSEC-WS])
	☞ Page 1544 Availability of writing/reading data to/from word devices ([MELSEC-WS])
Engineering software for MELSEC-WS and device representation of GT Designer3	☞ Page 1545 Engineering software for MELSEC-WS and device representation of GT Designer3 ([MELSEC-WS])
Offset specifications	☞ Page 1546 Offset specification ([MELSEC-WS])

Monitoring-supported bit devices ([MELSEC-WS])

The following table shows monitoring-supported bit devices.

To check whether writing/reading data to/from each device is available, refer to the following.

☞ Page 1543 Availability of writing/reading data to/from bit devices ([MELSEC-WS])

○: Available

×: Not available

Device name		Device No. representation	Setting range	Specifications of EG devices*1	
				Assignment to EG devices	Access using a client
I	Input	Decimal	I(Module No.).(Input position) Notation example: I12.8 • Module No. (decimal): 1 to 12 • Input position (decimal): 1 to 8	×	×
Q	Output	Decimal	Q(Module No.).(Output position) Notation example: Q12.8 • Module No. (decimal): 1 to 12 • Output position (decimal): 1 to 8	×	×
LI	Logic input	Decimal	LI(Byte No.).(Bit position) Notation example: LI3.7 • Byte No. (decimal): 0 to 3 • Bit position (decimal): 0 to 7	×	×
LQ	Logic result	Decimal	LQ(Byte No.).(Bit position) Notation example: LQ3.7 • Byte No. (decimal): 0 to 3 • Bit position (decimal): 0 to 7	×	×

*1 For the devices assigned to EG devices (gateway devices) and the compatible clients, refer to the following.
📖GT Designer3 (GOT2000) Screen Design Manual

Availability of writing/reading data to/from bit devices ([MELSEC-WS])

The following shows whether writing/reading data to/from bit devices is available by device type.

When the device type is other than the bit type, set the device No. in multiples of 16.

R/W: Both read and write

R/-: Read only

-/W: Write only

-/-: No read/write access

Device name	Device type				
	Bit	Byte (8 bits)	Word (16 bits)	Double-word (32 bits)	Quad-word (64 bits)
I	R/-	-/-	-/-	-/-	-/-
Q	R/-	-/-	-/-	-/-	-/-
LI	R/-	-/-	-/-	-/-	-/-
LQ	R/-	-/-	-/-	-/-	-/-

A

Monitoring-supported word devices ([MELSEC-WS])

The following table shows monitoring-supported word devices.

To check whether writing/reading data to/from each device is available, refer to the following.

☞ Page 1544 Availability of writing/reading data to/from word devices ([MELSEC-WS])

○: Available

×: Not available

Device name		Device No. representation	Setting range	Specifications of EG devices*1	
				Assignment to EG devices	Access using a client
EI	EFI input (byte)	Decimal	EI(EFI No.)(Device No.)(Byte No.) Notation example: EI231 • EFI No. (decimal): 1 to 2 • Device No. (decimal): 1 to 3 • Byte No. (decimal): 0 to 3	○	○
EQ	EFI output (byte)	Decimal	EQ(EFI No.)(Device No.)(Byte No.) Notation example: EQ21 • EFI No. (decimal): 1 to 2 • Byte No. (decimal): 0 to 2	○	○
D	Data (byte)	Decimal	0 to 99	○	○
LD	Logic input (byte)	Decimal	0 to 3	○	○
W	Data (word)	Decimal	0 to 49	○	○
LW	Logic input (word)	Decimal	0 to 1	○	○

*1 For the devices assigned to EG devices (gateway devices) and the compatible clients, refer to the following.
📖GT Designer3 (GOT2000) Screen Design Manual

Availability of writing/reading data to/from word devices ([MELSEC-WS])

The following shows the availability of writing/reading data to/from word devices by device type.

R/W: Both read and write

R/-: Read only

-/W: Write only

-/-: No read/write access

Device name	Device type			
	Word (16 bits)	Double-word (32 bits)	Quad-word (64 bits)	Bit of word data
EI	R/-	-/-	-/-	R/-
EQ	R/-	-/-	-/-	R/-
D	R/-	-/-	-/-	R/-
LD	R/-	-/-	-/-	R/-
W	R/-	R/-	-/-	R/-
LW	R/-	R/-	-/-	R/-

Engineering software for MELSEC-WS and device representation of GT Designer3 ([MELSEC-WS])

The engineering software for MELSEC-WS and the device representation of GT Designer3 are different.
Set the device by referring to the following table.

Device name	GT Designer3	Engineering software for MELSEC-WS
I*1	I□□.● □□ (1-12(Dec)): Module number ● (1-8): Input position	▲▲▲▲[□□],I● ▲▲▲▲: I/O model name (such as XTIO and XTDI) □□ (1-12(Dec)): Module number ● (1-8): Input position
Q*1	Q□□.● □□ (1-12(Dec)): Module number ●(1-8): Output position	▲▲▲▲ [□□].Q ▲▲▲▲: I/O model name (such as XTIO and XTDI) □□ (1-12(Dec)): Module number ●(1-8): Output position
LI*1	LI□.● □ (0-3): Byte number ● (0-7): Bit position	▲▲▲▲[0].□.● ▲▲▲▲: CPU type (CPU0, CPU1) □ (0-3): Byte number ● (0-7): Bit position
LQ*1	LQ□.● □ (0-3): Byte number ● (0-7): Bit position	▲▲□.● ▲▲: Result □ (0-3): Byte number ● (0-7): Bit position
EI*1	EI○□● ○ (1-2): EFI number □ (1-3): Device number ● (0-3): Byte number	▲▲▲▲[0].EFI○:□,Byte● ▲▲▲▲: CPU type (CPU0, CPU1) ○ (1-2): EFI number □ (1-3): Device number ● (0-3): Byte number
EQ*1	EQ○● ○ (1-2): EFI number ● (0-2): Byte number	▲▲▲▲[0].EFI○:1,Byte● ▲▲▲▲: CPU type (CPU0, CPU1) ○ (1-2): EFI number ● (0-2): Byte number
D	D● ●(0-99(Dec)): Byte number	RS232 data (Safety controller to RS232)
LD	LD● ● (0-3): Byte number	RS232 data (RS232 to safety controller)
W	W● ● (0-49(Dec)): Word number Word virtualization of D device W0 = (D1(Higher-order bits), D0(Lower-order bits))	GOT independent device (Not available)
LW	LW● ● (0-1): Word number Word virtualization of LD device LW0 = (LD1(Higher-order bits), LD0(Lower-order bits))	GOT independent device (Not available)

*1 When the mapping position is changed by the MELSEC-WS engineering software, a mismatch occurs between virtual devices on GOT and MELSEC-WS mapping devices.
When mapping is changed, use D devices or LD devices.

A

Offset specification ([MELSEC-WS])

When devices are set with using the offset function, the device values are as follows.

■Input (I)

Offset	+0	+1	+2	+3	+4	+5	+6	+7	+8 to +15
+0	I1.1	I1.2	I1.3	I1.4	I1.5	I1.6	I1.7	I1.8	Fixed to 0 (OFF)
+16	I2.1	I2.2	I2.3	I2.4	I2.5	I2.6	I2.7	I2.8	
+32	I3.1	I3.2	I3.3	I3.4	I3.5	I3.6	I3.7	I3.8	
+48	I4.1	I4.2	I4.3	I4.4	I4.5	I4.6	I4.7	I4.8	
+64	I5.1	I5.2	I5.3	I5.4	I5.5	I5.6	I5.7	I5.8	
+80	I6.1	I6.2	I6.3	I6.4	I6.5	I6.6	I6.7	I6.8	
+96	I7.1	I7.2	I7.3	I7.4	I7.5	I7.6	I7.7	I7.8	
+112	I8.1	I8.2	I8.3	I8.4	I8.5	I8.6	I8.7	I8.8	
+128	I9.1	I9.2	I9.3	I9.4	I9.5	I9.6	I9.7	I9.8	
+144	I10.1	I10.2	I10.3	I10.4	I10.5	I10.6	I10.7	I10.8	
+160	I11.1	I11.2	I11.3	I11.4	I11.5	I11.6	I11.7	I11.8	
+176	I12.1	I12.2	I12.3	I12.4	I12.5	I12.6	I12.7	I12.8	
+192	Device range error								

■Output (Q)

Offset	+0	+1	+2	+3	+4	+5	+6	+7	+8 to +15
+0	Q1.1	Q1.2	Q1.3	Q1.4	Q1.5	Q1.6	Q1.7	Q1.8	Fixed to 0 (OFF)
+16	Q2.1	Q2.2	Q2.3	Q2.4	Q2.5	Q2.6	Q2.7	Q2.8	
+32	Q3.1	Q3.2	Q3.3	Q3.4	Q3.5	Q3.6	Q3.7	Q3.8	
+48	Q4.1	Q4.2	Q4.3	Q4.4	Q4.5	Q4.6	Q4.7	Q4.8	
+64	Q5.1	Q5.2	Q5.3	Q5.4	Q5.5	Q5.6	Q5.7	Q5.8	
+80	Q6.1	Q6.2	Q6.3	Q6.4	Q6.5	Q6.6	Q6.7	Q6.8	
+96	Q7.1	Q7.2	Q7.3	Q7.4	Q7.5	Q7.6	Q7.7	Q7.8	
+112	Q8.1	Q8.2	Q8.3	Q8.4	Q8.5	Q8.6	Q8.7	Q8.8	
+128	Q9.1	Q9.2	Q9.3	Q9.4	Q9.5	Q9.6	Q9.7	Q9.8	
+144	Q10.1	Q10.2	Q10.3	Q10.4	Q10.5	Q10.6	Q10.7	Q10.8	
+160	Q11.1	Q11.2	Q11.3	Q11.4	Q11.5	Q11.6	Q11.7	Q11.8	
+176	Q12.1	Q12.2	Q12.3	Q12.4	Q12.5	Q12.6	Q12.7	Q12.8	
+192	Device range error								

■Logic input (LI)

Offset	+0	+1	+2	+3	+4	+5	+6	+7
+0	LI0.0	LI0.1	LI0.2	LI0.3	LI0.4	LI0.5	LI0.6	LI0.7
+8	LI1.0	LI1.1	LI1.2	LI1.3	LI1.4	LI1.5	LI1.6	LI1.7
+16	LI2.0	LI2.1	LI2.2	LI2.3	LI2.4	LI2.5	LI2.6	LI2.7
+24	LI3.0	LI3.1	LI3.2	LI3.3	LI3.4	LI3.5	LI3.6	LI3.7
+32	Device range error							

■Logic result (LQ)

Offset	+0	+1	+2	+3	+4	+5	+6	+7
+0	LQ0.0	LQ0.1	LQ0.2	LQ0.3	LQ0.4	LQ0.5	LQ0.6	LQ0.7
+8	LQ1.0	LQ1.1	LQ1.2	LQ1.3	LQ1.4	LQ1.5	LQ1.6	LQ1.7
+16	LQ2.0	LQ2.1	LQ2.2	LQ2.3	LQ2.4	LQ2.5	LQ2.6	LQ2.7
+24	LQ3.0	LQ3.1	LQ3.2	LQ3.3	LQ3.4	LQ3.5	LQ3.6	LQ3.7
+32	Device range error							

■EFI input (EI)

Offset	+0	+1	+2	+3	+4 to +15
+0	EI110	EI111	EI112	EI113	Fixed to 0
+16	EI120	EI121	EI122	EI123	
+32	EI130	EI131	EI132	EI133	
+48 : +240	Fixed to 0				
+256	EI210	EI211	EI212	EI213	Fixed to 0
+272	EI220	EI221	EI222	EI223	
+288	EI230	EI231	EI232	EI233	Device range error
+302	Device range error				

■EFI output (EQ)

Offset	+0	+1	+2	+3 to +15
+0	EQ10	EQ11	EQ12	Fixed to 0
+16 : +240	Fixed to 0			
+256	EQ20	EQ21	EQ22	Device range error
+272	Device range error			

A

[MELIPC]

GT27 GT25 GT23 GT21 GS25 GS21

Not available to GT2105-Q.

This section shows the device range of MELIPC (MI5122-VW).

Item	Reference
Specifications of bit devices	☞ Page 1548 Monitoring-supported bit devices ([MELIPC])
Specifications of word devices	☞ Page 1549 Monitoring-supported word devices ([MELIPC])

The settable device range is the same when [MELIPC] is selected and when [MELSEC iQ-R, RnMT/NC/RT, CR800-D] is selected.

For the device range when the GOT is connected to the MELSEC iQ-R series, refer to the following.

☞ Page 1393 [MELSEC iQ-R, RnMT/NC/RT, CR800-D], [MELSEC iQ-R, RnMT/RT, CR800-D]

Monitoring-supported bit devices ([MELIPC])

The following table shows monitoring-supported bit devices.

To check whether writing/reading data to/from each device is available, refer to the following.

☞ Page 1400 [MELSEC iQ-R, RnMT/NC/RT, CR800-D], [MELSEC iQ-R, RnMT/RT, CR800-D]

○: Available

×: Not available

Device name		Device No. representation	Setting range	Specifications of EG devices*1	
				Assignment to EG devices	Access using a client
B	Link relay	Hexadecimal	00000 to 9FFFF	○	○
M	Internal relay	Decimal	0 to 61439	○	○
SM	Special relay	Decimal	0 to 4095	○	○
JnX	Link input (link direct)	Hexadecimal	J(Network No.n)-X(Device) Notation example: J1-X0000 • Network No.n (decimal): 1 to 239 • Device (hexadecimal): 0000 to 3FFF	○	○
JnY	Link output (link direct)	Hexadecimal	J(Network No.n)-Y(Device) Notation example: J1-Y0000 • Network No.n (decimal): 1 to 239 • Device (hexadecimal): 0000 to 3FFF	○	○
JnSB	Link special relay (link direct)	Hexadecimal	J(Network No.n)-SB(Device) Notation example: J1-SB000 • Network No.n (decimal): 1 to 239 • Device (hexadecimal): 000 to 1FF	○	○

*1 For the devices assigned to EG devices (gateway devices) and the compatible clients, refer to the following.
GT Designer3 (GOT2000) Screen Design Manual

Monitoring-supported word devices ([MELIPC])

The following table shows monitoring-supported word devices.

To check whether writing/reading data to/from each device is available, refer to the following.

☞ Page 1411 Availability of writing/reading data to/from word devices ([MELSEC iQ-R, RnMT/NC/RT, CR800-D], [MELSEC iQ-R, RnMT/RT, CR800-D])

○: Available

×: Not available

Device name		Device No. representation	Setting range	Specifications of EG devices*1	
				Assignment to EG devices	Access using a client
D	Data register	Decimal	0 to 4184063	○	○
SD	Special register	Decimal	0 to 4095	○	○
W	Link register	Hexadecimal	00000 to FFFFF	○	○
ZR	Extension file register	Decimal	0 to 524287	○	○
JnW	Link register (link direct)	Hexadecimal	J(Network No.n)-W(Device) Notation example: J1-W00000 • Network No.n (decimal): 1 to 239 • Device (hexadecimal): 0000 to 3FFF*2	○	○
JnSW	Link special register (link direct)	Hexadecimal	J(Network No.n)-SW(Device) Notation example: J1-SW000 • Network No.n (decimal): 1 to 239 • Device (hexadecimal): 000 to 1FF	○	○
U3E0G	CPU buffer memory access device	Decimal	U3E0-G(Device) Notation example: U3E0-G100 • Device (decimal): 0 to 199999	○	○

*1 For the devices assigned to EG devices (gateway devices) and the compatible clients, refer to the following.
📖GT Designer3 (GOT2000) Screen Design Manual

*2 The device range for a PLC with the CC-Link IE TSN master/local module (1000BASE-SX model) (RJ71GN11-SX) installed is 00000 to 83FFF.

A

[MELSERVO-J2M-P8A]

GT27 GT25 GT23 GT21 GS25 GS21

Item	Reference
Specifications of bit devices	☞ Page 1550 Monitoring-supported bit devices ([MELSERVO-J2M-P8A])
	☞ Page 1550 Availability of writing/reading data to/from bit devices ([MELSERVO-J2M-P8A])
Specifications of word devices	☞ Page 1551 Monitoring-supported word devices ([MELSERVO-J2M-P8A])
	☞ Page 1551 Availability of writing/reading data to/from word devices ([MELSERVO-J2M-P8A])
Specifications of double-word devices	☞ Page 1552 Monitoring-supported double-word devices ([MELSERVO-J2M-P8A])
	☞ Page 1552 Availability of writing/reading data to/from double-word devices ([MELSERVO-J2M-P8A])
Specifications of virtual servo amplifier devices	☞ Page 1552 Virtual servo amplifier devices ([MELSERVO-J2M-P8A])
	☞ Page 1555 Precautions for virtual servo amplifier devices ([MELSERVO-J2M-P8A])

Monitoring-supported bit devices ([MELSERVO-J2M-P8A])

The following table shows monitoring-supported virtual bit devices for servo amplifiers.

To check whether writing/reading data to/from each device is available, refer to the following.

☞ Page 1550 Availability of writing/reading data to/from bit devices ([MELSERVO-J2M-P8A])

For details on virtual servo amplifier devices, refer to the following.

☞ Page 1552 Virtual servo amplifier devices ([MELSERVO-J2M-P8A])

○: Available

×: Not available

Device name		Device No. representation	Setting range	Specifications of EG devices*1	
				Assignment to EG devices	Access using a client
SP	Servo amplifier request	Decimal	1 to 2	×	×
OM	Operation mode selection	Decimal	0, 4	×	×

*1 For the devices assigned to EG devices (gateway devices) and the compatible clients, refer to the following.
GT Designer3 (GOT2000) Screen Design Manual

Availability of writing/reading data to/from bit devices ([MELSERVO-J2M-P8A])

The following shows whether writing/reading data to/from bit devices is available by device type.

When the device type is other than the bit type, set the device No. in multiples of 16.

R/W: Both read and write

R/-: Read only

-/W: Write only

-/-: No read/write access

Device name	Device type				
	Bit	Byte (8 bits)	Word (16 bits)	Double-word (32 bits)	Quad-word (64 bits)
SP	-/W	-/-	-/-	-/-	-/-
OM	-/W	-/-	-/-	-/-	-/-

Monitoring-supported word devices ([MELSERVO-J2M-P8A])

The following table shows monitoring-supported virtual word devices for servo amplifiers.

To check whether writing/reading data to/from each device is available, refer to the following.

☞ Page 1551 Availability of writing/reading data to/from word devices ([MELSERVO-J2M-P8A])

For details on virtual servo amplifier devices, refer to the following.

☞ Page 1552 Virtual servo amplifier devices ([MELSERVO-J2M-P8A])

○: Available

×: Not available

Device name		Device No. representation	Setting range	Specifications of EG devices*1	
				Assignment to EG devices	Access using a client
PRM	Parameter	Decimal	0 to 29 1000 to 1029	○	×
ST	Status display	Decimal	0 to 2	○	×
AL	Alarm (current alarm)	Decimal	0 11 to 13	○	×
AL	Alarm (alarm history)	Decimal	200 to 205 210 to 215 230 to 235	○	×
DI	External input signal	Decimal	0 to 2	×	×
DO	External output signal	Decimal	0 to 1	×	×

*1 For the devices assigned to EG devices (gateway devices) and the compatible clients, refer to the following.
📖GT Designer3 (GOT2000) Screen Design Manual

Availability of writing/reading data to/from word devices ([MELSERVO-J2M-P8A])

The following shows the availability of writing/reading data to/from word devices by device type.

R/W: Both read and write

R/-: Read only

-/W: Write only

-/-: No read/write access

Device name	Device type			
	Word (16 bits)	Double-word (32 bits)	Quad-word (64 bits)	Bit of word data
PRM	R/W	R/W	-/-	-/-
ST	R/-	R/-	-/-	-/-
AL	R/-	R/-	-/-	-/-
DI	R/-	R/-	-/-	-/-
DO	R/-	R/-	-/-	-/-

A

Monitoring-supported double-word devices ([MELSERVO-J2M-P8A])

The following table shows monitoring-supported virtual double-word devices for servo amplifiers.

To check whether writing/reading data to/from each device is available, refer to the following.

☞ Page 1552 Availability of writing/reading data to/from double-word devices ([MELSERVO-J2M-P8A])

For details on virtual servo amplifier devices, refer to the following.

☞ Page 1552 Virtual servo amplifier devices ([MELSERVO-J2M-P8A])

○: Available

×: Not available

Device name		Device No. representation	Setting range	Specifications of EG devices*1	
				Assignment to EG devices	Access using a client
TMO	Forced output of signal pin (for test operation)	Decimal	0	×	×

*1 For the devices assigned to EG devices (gateway devices) and the compatible clients, refer to the following.
GT Designer3 (GOT2000) Screen Design Manual

Availability of writing/reading data to/from double-word devices ([MELSERVO-J2M-P8A])

The following shows the availability of writing/reading data to/from double-word devices by device type.

R/W: Both read and write

R/-: Read only

-/W: Write only

-/-: No read/write access

Device name	Device type			
	Word (16 bits)	Double-word (32 bits)	Quad-word (64 bits)	Bit of double-word data
TMO	-/-	-/W	-/-	-/-

Virtual servo amplifier devices ([MELSERVO-J2M-P8A])

The following shows the correspondence between the virtual devices used in the GOT and the servo amplifier data.

Virtual device name	Reference
SP	☞ Page 1552 Servo amplifier request ([MELSERVO-J2M-P8A])
OM	☞ Page 1553 Operation mode selection ([MELSERVO-J2M-P8A])
PRM	☞ Page 1553 Parameter ([MELSERVO-J2M-P8A])
ST	☞ Page 1553 Status display ([MELSERVO-J2M-P8A])
AL	☞ Page 1554 Alarm ([MELSERVO-J2M-P8A])
DI	☞ Page 1554 External input signal ([MELSERVO-J2M-P8A])
DO	☞ Page 1554 External output signal ([MELSERVO-J2M-P8A])
TMO	☞ Page 1554 Forced output of signal pin (for test operation) ([MELSERVO-J2M-P8A])

■Servo amplifier request ([MELSERVO-J2M-P8A])

Virtual device name	Name	Symbol
SP1	Current alarm clear	-
SP2	Alarm history clear	-

When using the servo amplifier request, note the following.

Precautions	Description
When setting a device for a bit switch.	Do not select [Alternate] for [Switch Action] of the bit switch.

■Operation mode selection ([MELSERVO-J2M-P8A])

Virtual device name	Name	Symbol
OM0	Normal mode (not test operation mode)	-
OM4	Output signal (DO) forced output	-

When using the operation mode selection, note the following.

Precautions	Description
When setting a device for a bit switch.	Do not select [Alternate] for [Switch Action] of the bit switch.

■Parameter ([MELSERVO-J2M-P8A])

Use an appropriate device according to the write destination of the servo amplifier.

- PRM0 to PRM29: Writing data to the RAM of a servo amplifier.
- PRM1000 to PRM1029: Writing data to the EEPROM of a servo amplifier.

For the parameters prefixed by an asterisk (*), setting becomes effective when the power is turned off once and back on after setting the parameter data.

Virtual device name	Name	Symbol
PRM0, PRM1000	Serial communication function selection, alarm history clear	*BPS
PRM1, PRM1001	Regenerative brake option selection	*REG
PRM2, PRM1002	Function selection 1	*OP1
PRM3, PRM1003	Analog monitor 1 output	MD1
PRM4, PRM1004	Analog monitor 2 output	MD2
PRM5, PRM1005	Analog monitor 3 output	MD3
PRM6, PRM1006	Analog monitor 1 offset	MO1
PRM7, PRM1007	Analog monitor 2 offset	MO2
PRM8, PRM1008	Analog monitor 3 offset	MO3
PRM9, PRM1009	Function selection 2	*OP2
PRM10, PRM1010	Interface unit serial communication number selection	*ISN
PRM11, PRM1011	1slot serial communication station number selection	*DSN1
PRM12, PRM1012	2slot serial communication station number selection	*DSN2
PRM13, PRM1013	3slot serial communication station number selection	*DSN3
PRM14, PRM1014	4slot serial communication station number selection	*DSN4
PRM15, PRM1015	5slot serial communication station number selection	*DSN5
PRM16, PRM1016	6slot serial communication station number selection	*DSN6
PRM17, PRM1017	7slot serial communication station number selection	*DSN7
PRM18, PRM1018	8slot serial communication station number selection	*DSN8
PRM19, PRM1019	Parameter write inhibit	*BLK
PRM20, PRM1020	Serial communication time-out selection	SIC
PRM21 to PRM29, PRM1021 to PRM1029	For manufacturer setting	-

■Status display ([MELSERVO-J2M-P8A])

Virtual device name	Name	Symbol
ST0	Regenerative load ratio	-
ST1	Bus voltage	-
ST2	Peak bus voltage	-

■Alarm ([MELSERVO-J2M-P8A])

Virtual device name	Name	Symbol
AL0	Current alarm number	-
AL11	Servo status when alarm occurs, regenerative load ratio	-
AL12	Servo status when alarm occurs, bus voltage	-
AL13	Servo status when alarm occurs, peak bus voltage	-
AL200	Alarm number from Alarm History most recent alarm	-
AL201	Alarm number from Alarm History first alarm in past	-
AL202	Alarm number from Alarm History second alarm in past	-
AL203	Alarm number from Alarm History third alarm in past	-
AL204	Alarm number from Alarm History fourth alarm in past	-
AL205	Alarm number from Alarm History fifth alarm in past	-
AL210	Alarm occurrence time in alarm history most recent alarm	-
AL211	Alarm occurrence time in alarm history first alarm in past	-
AL212	Alarm occurrence time in alarm history second alarm in past	-
AL213	Alarm occurrence time in alarm history third alarm in past	-
AL214	Alarm occurrence time in alarm history fourth alarm in past	-
AL215	Alarm occurrence time in alarm history fifth alarm in past	-
AL230	Detailed alarm from Alarm History most recent alarm	-
AL231	Detailed alarm from Alarm History first alarm in past	-
AL232	Detailed alarm from Alarm History second alarm in past	-
AL233	Detailed alarm from Alarm History third alarm in past	-
AL234	Detailed alarm from Alarm History fourth alarm in past	-
AL235	Detailed alarm from Alarm History fifth alarm in past	-

■External input signal ([MELSERVO-J2M-P8A])

Virtual device name	Name	Symbol	Data to be read from the servo amplifier
DI0	External input pin status CN1A/CN1B	-	For the mapping of the bits corresponding to the data to be read, refer to the following. 📖MR-J2M-A Instruction Manual
DI1	External input pin status CN5	-	
DI2	External input pin status CN4A/CN4B	-	

■External output signal ([MELSERVO-J2M-P8A])

Virtual device name	Name	Symbol	Data to be read from the servo amplifier
DO0	External output pin status CN1A/CN1B	-	For the mapping of the bits corresponding to the data to be read, refer to the following. 📖MR-J2M-A Instruction Manual
DO1	External output pin status CN4A/CN4B	-	

■Forced output of signal pin (for test operation) ([MELSERVO-J2M-P8A])

Virtual device name	Name	Symbol
TMO0	Forced output of signal pin	-

When using the forced output of signal pin (for test operation), note the following.

Precautions	Description
Writing a value to a virtual device using an object	Numerical input cannot be used. Use a word switch for writing.

Precautions for virtual servo amplifier devices ([MELSERVO-J2M-P8A])

■Monitoring servo amplifier

Carefully read the manual of servo amplifier to be connected and fully understand the operating procedures before monitoring.

Before operation, check the parameter settings and adjust them as required. Improper settings may cause some machines to perform unexpected operation.

The parameter settings must not be changed excessively. Operation will be insatiable.

■Data length of a virtual device

Set the data length of a virtual device as shown below.

Virtual device	Data length
PRM, ST, AL, PA, PB, PC, PD, POS, SPD, ACT, DCT, DWL, AUX	16 bits or 32 bits Depending on the servo amplifier data
DI, DO, TMI, TMO, TMD	32 bits

If the above data length is not set, data will be specified incorrectly for the servo amplifier or cannot be properly monitored by the GOT.

Item	Operation	
Monitoring	Handling 16-bit data as 32-bit data	The upper 16 bits are displayed as 0.
	Handling 32-bit data as 16-bit data	The lower 16 bits only are displayed.
Writing	The GOT writes within the range of data length set. Note that the servo amplifier responds correctly while the written data is invalid in the servo amplifier side when the written data is out of the range of values which can be set by the servo amplifier.	

■Memory to which parameter values are written

Parameter values are written to the RAM or EEPROM of a servo amplifier.

Write destination	Precautions
RAM	Remember that the written parameter values are cleared when the servo amplifier is turned off.
EEPROM	The written parameter values are not cleared when the servo amplifier is turned off. However, there is a limit on the number of times data can be written to EEPROM. If you update the data frequently (more than once an hour), write parameter values to RAM. For the details, refer to the manual of the servo amplifier used.

■Data type and format settings for using virtual servo amplifier devices (direct connection between the GOT and servo amplifier)

To specify virtual servo amplifier devices in the object setting or other settings, the data type and format must be set according to the notation of the values handled by the virtual devices.

For notation of the virtual device values, refer to the following.

📖Instruction manual for the servo amplifier used

📖MR Configurator2 HELP

The following shows a setting example for using virtual servo amplifier devices for an object.

Example) When using a numerical display

Notation of the virtual device values	Setting
Decimal number (positive values only)	• [Data Type]: [Unsigned BIN16] ([Unsigned BIN32] for 65536 or more) • [Format]: [Unsigned Decimal]
Decimal number (positive and negative values)	• [Data Type]: [Signed BIN16] ([Signed BIN32] for -32769 or less, and 32768 or more) • [Format]: [Signed Decimal]
Hexadecimal number	• [Data Type]: [Unsigned BIN16] ([Unsigned BIN32] for 0x10000 or more) • [Format]: [Hexadecimal]
Decimal point notation (positive values only)	• [Data Type]: [Real] • [Format]: [Real] • [Digits (Integral)]: Set the number of digits in the integral portion. • [Digits (Fractional)]: Set the number of digits in the fractional portion.
Decimal point notation (positive and negative values)	
When the notation varies by digit	• [Data Type]: [Unsigned BIN16] ([Unsigned BIN32] for 0x10000 or more) • [Format]: [Hexadecimal] • On the [Operation/Script] tab, select [Data Operation] for [Operation Type], and set [Bit Mask] or [Bit Shift].

■Specifying consecutive virtual servo amplifier devices

The GOT does not support writing/reading data to/from consecutive virtual servo amplifier devices.

[MELSERVO-J2M-*DU]

GT27 GT25 GT23 GT21 GS25 GS21

Item	Reference
Specifications of bit devices	☞ Page 1557 Monitoring-supported bit devices ([MELSERVO-J2M-*DU])
	☞ Page 1557 Availability of writing/reading data to/from bit devices ([MELSERVO-J2M-*DU])
Specifications of word devices	☞ Page 1558 Monitoring-supported word devices ([MELSERVO-J2M-*DU])
	☞ Page 1558 Availability of writing/reading data to/from word devices ([MELSERVO-J2M-*DU])
Specifications of double-word devices	☞ Page 1559 Monitoring-supported double-word devices ([MELSERVO-J2M-*DU])
	☞ Page 1559 Availability of writing/reading data to/from double-word devices ([MELSERVO-J2M-*DU])
Specifications of virtual servo amplifier devices	☞ Page 1560 Virtual servo amplifier devices ([MELSERVO-J2M-*DU])
	☞ Page 1564 Precautions for virtual servo amplifier devices ([MELSERVO-J2M-*DU])

Monitoring-supported bit devices ([MELSERVO-J2M-*DU])

The following table shows monitoring-supported virtual bit devices for servo amplifiers.

To check whether writing/reading data to/from each device is available, refer to the following.

☞ Page 1557 Availability of writing/reading data to/from bit devices ([MELSERVO-J2M-*DU])

For details on virtual servo amplifier devices, refer to the following.

☞ Page 1560 Virtual servo amplifier devices ([MELSERVO-J2M-*DU])

○: Available

×: Not available

Device name		Device No. representation	Setting range	Specifications of EG devices*1	
				Assignment to EG devices	Access using a client
SP	Servo amplifier request	Decimal	0 to 6	×	×
OM	Operation mode selection	Decimal	0 to 4	×	×
TMB	Instruction demand (for test operation)	Decimal	0 to 1	×	×

*1 For the devices assigned to EG devices (gateway devices) and the compatible clients, refer to the following.
📖GT Designer3 (GOT2000) Screen Design Manual

Availability of writing/reading data to/from bit devices ([MELSERVO-J2M-*DU])

The following shows whether writing/reading data to/from bit devices is available by device type.

When the device type is other than the bit type, set the device No. in multiples of 16.

R/W: Both read and write

R/-: Read only

-/W: Write only

-/-: No read/write access

Device name	Device type				
	Bit	Byte (8 bits)	Word (16 bits)	Double-word (32 bits)	Quad-word (64 bits)
SP	-/W	-/-	-/-	-/-	-/-
OM	-/W	-/-	-/-	-/-	-/-
TMB	-/W	-/-	-/-	-/-	-/-

A

Monitoring-supported word devices ([MELSERVO-J2M-*DU])

The following table shows monitoring-supported virtual word devices for servo amplifiers.

To check whether writing/reading data to/from each device is available, refer to the following.

☞ Page 1558 Availability of writing/reading data to/from word devices ([MELSERVO-J2M-*DU])

For details on virtual servo amplifier devices, refer to the following.

☞ Page 1560 Virtual servo amplifier devices ([MELSERVO-J2M-*DU])

○: Available

×: Not available

Device name		Device No. representation	Setting range	Specifications of EG devices*1	
				Assignment to EG devices	Access using a client
PRM	Parameter	Decimal	0 to 84 1000 to 1084	○	×
ST	Status display	Decimal	0 to 10	○	×
AL	Alarm (current alarm)	Decimal	0 11 to 21	○	×
AL	Alarm (alarm history)	Decimal	200 to 205 210 to 215 230 to 235	○	×

*1 For the devices assigned to EG devices (gateway devices) and the compatible clients, refer to the following.
GT Designer3 (GOT2000) Screen Design Manual

Availability of writing/reading data to/from word devices ([MELSERVO-J2M-*DU])

The following shows the availability of writing/reading data to/from word devices by device type.

R/W: Both read and write

R/-: Read only

-/W: Write only

-/-: No read/write access

Device name	Device type			
	Word (16 bits)	Double-word (32 bits)	Quad-word (64 bits)	Bit of word data
PRM	R/W	R/W	-/-	-/-
ST	R/-	R/-	-/-	-/-
AL	R/-	R/-	-/-	-/-

Monitoring-supported double-word devices ([MELSERVO-J2M-*DU])

The following table shows monitoring-supported virtual double-word devices for servo amplifiers.

To check whether writing/reading data to/from each device is available, refer to the following.

☞ Page 1559 Availability of writing/reading data to/from double-word devices ([MELSERVO-J2M-*DU])

For details on virtual servo amplifier devices, refer to the following.

☞ Page 1560 Virtual servo amplifier devices ([MELSERVO-J2M-*DU])

○: Available

×: Not available

Device name		Device No. representation	Setting range	Specifications of EG devices*1	
				Assignment to EG devices	Access using a client
TMI	Input signal for test operation (for test operation)	Decimal	0	×	×
TMO	Forced output of signal pin (for test operation)	Decimal	0	×	×
TMD	Set data (for test operation)	Decimal	0 to 2	×	×

*1 For the devices assigned to EG devices (gateway devices) and the compatible clients, refer to the following.
📖GT Designer3 (GOT2000) Screen Design Manual

Availability of writing/reading data to/from double-word devices ([MELSERVO-J2M-*DU])

The following shows the availability of writing/reading data to/from double-word devices by device type.

R/W: Both read and write

R/-: Read only

-/W: Write only

-/-: No read/write access

Device name	Device type			
	Word (16 bits)	Double-word (32 bits)	Quad-word (64 bits)	Bit of double-word data
TMI	-/-	-/W	-/-	-/-
TMO	-/-	-/W	-/-	-/-
TMD	-/-	-/W	-/-	-/-

A

Virtual servo amplifier devices ([MELSERVO-J2M-*DU])

The following shows the correspondence between the virtual devices used in the GOT and the servo amplifier data.

Virtual device name	Reference
SP	☞ Page 1560 Servo amplifier request ([MELSERVO-J2M-*DU])
OM	☞ Page 1560 Operation mode selection ([MELSERVO-J2M-*DU])
TMB	☞ Page 1560 Instruction demand (for test operation) ([MELSERVO-J2M-*DU])
PRM	☞ Page 1561 Parameter ([MELSERVO-J2M-*DU])
ST	☞ Page 1562 Status display ([MELSERVO-J2M-*DU])
AL	☞ Page 1563 Alarm ([MELSERVO-J2M-*DU])
TMI	☞ Page 1564 Input signal for test operation (for test operation) ([MELSERVO-J2M-*DU])
TMO	☞ Page 1564 Forced output of signal pin (for test operation) ([MELSERVO-J2M-*DU])
TMD	☞ Page 1564 Set data (for test operation) ([MELSERVO-J2M-*DU])

■Servo amplifier request ([MELSERVO-J2M-*DU])

Virtual device name	Name	Symbol
SP0	Status display data clear	-
SP1	Current alarm clear	-
SP2	Alarm history clear	-
SP3	External input signal prohibited	-
SP4	External output signal prohibited	-
SP5	External input signal resumed	-
SP6	External output signal resumed	-

When using the servo amplifier request, note the following.

Precautions	Description
When setting a device for a bit switch	Do not select [Alternate] for [Switch Action] of the bit switch.

■Operation mode selection ([MELSERVO-J2M-*DU])

Virtual device name	Name	Symbol
OM0	Normal mode (not test operation mode)	-
OM1	JOG operation	-
OM2	Positioning operation	-
OM3	Motorless operation	-
OM4	Output signal (DO) forced output	-

When using the operation mode selection, note the following.

Precautions	Description
When setting a device for a bit switch	Do not select [Alternate] for [Switch Action] of the bit switch.

■Instruction demand (for test operation) ([MELSERVO-J2M-*DU])

Virtual device name	Name	Symbol
TMB0	Clearing acceleration/deceleration time constant	-
TMB1	Temporary stop command	-

When using the instruction demand (for test operation), note the following.

Precautions	Description
When setting a device for a bit switch	Do not select [Alternate] for [Switch Action] of the bit switch.

■Parameter ([MELSERVO-J2M-*DU])

Use an appropriate device according to the write destination of the servo amplifier.

- PRM0 to PRM84: Writing data to the RAM of a servo amplifier
- PRM1000 to PRM1084: Writing data to the EEPROM of a servo amplifier

For the parameters prefixed by an asterisk (*), setting becomes effective when the power is turned off once and back on after setting the parameter data.

Virtual device name	Name	Symbol
PRM0, PRM1000	For manufacturer setting	-
PRM1, PRM1001	Function selection 1	*OP1
PRM2, PRM1002	Auto tuning	ATU
PRM3, PRM1003	Electronic gear numerator (Command pulse multiplying factor numerator)	CMX
PRM4, PRM1004	Electronic gear denominator (Command pulse multiplying factor denominator)	CDV
PRM5, PRM1005	In-position range	INP
PRM6, PRM1006	Position control gain 1	PG1
PRM7, PRM1007	Position command acceleration/deceleration time constant (position smoothing)	PST
PRM8 to PRM15, PRM1008 to PRM1015	For manufacturer setting	-
PRM16, PRM1016	Alarm history clear	*BPS
PRM17 to PRM18, PRM1017 to PRM1018	For manufacturer setting	-
PRM19, PRM1019	DRU parameter block	*BLK
PRM20, PRM1020	Function selection 2	*OP2
PRM21, PRM1021	Function selection 3 (Command pulse selection)	*OP3
PRM22, PRM1022	Function selection 4	*OP4
PRM23, PRM1023	Feed forward gain	FFC
PRM24, PRM1024	Zero speed	ZSP
PRM25 to PRM26, PRM1025 to PRM1026	For manufacturer setting	-
PRM27, PRM1027	Encoder output pulses	*ENR
PRM28, PRM1028	Internal torque limit 1	TL1
PRM29 to PRM32, PRM1029 to PRM1032	For manufacturer setting	-
PRM33, PRM1033	Electromagnetic brake sequence output	MBR
PRM34, PRM1034	Ratio of load inertia moment to servo motor inertia moment	GD2
PRM35, PRM1035	Position control gain 2	PG2
PRM36, PRM1036	Speed control gain 1	VG1
PRM37, PRM1037	Speed control gain 2	VG2
PRM38, PRM1038	Speed integral compensation	VIC
PRM39, PRM1039	Speed differential compensation	VDC
PRM40 to PRM41, PRM1040 to PRM1041	For manufacturer setting	-
PRM42, PRM1042	Input signal selection 1	*DI1
PRM43 to PRM50, PRM1043 to PRM1050	For manufacturer setting	-
PRM51, PRM1051	Function selection 6	*OP6
PRM52 to PRM53, PRM1052 to PRM1053	For manufacturer setting	-
PRM54, PRM1054	Function selection 9	*OP9
PRM55, PRM1055	Function selection A	*OPA
PRM56 to PRM57, PRM1056 to PRM1057	For manufacturer setting	-
PRM58, PRM1058	Machine resonance suppression filter 1	NH1
PRM59, PRM1059	Machine resonance suppression filter 2	NH2
PRM60, PRM1060	Low-pass filter, adaptive vibration suppression control	LPF
PRM61, PRM1061	Ratio of load inertia moment to servo motor inertia moment 2	GD2B

Virtual device name	Name	Symbol
PRM62, PRM1062	Position control gain 2 changing ratio	PG2B
PRM63, PRM1063	Speed control gain 2 changing ratio	VG2B
PRM64, PRM1064	Speed integral compensation changing ratio	VICB
PRM65, PRM1065	Gain changing selection	*CDP
PRM66, PRM1066	Gain switching condition	CDS
PRM67, PRM1067	Gain switching time constant	CDT
PRM68, PRM1068	For manufacturer setting	-
PRM69, PRM1069	Command pulse multiplying factor numerator 2	CMX2
PRM70, PRM1070	Command pulse multiplying factor numerator 3	CMX3
PRM71, PRM1071	Command pulse multiplying factor numerator 4	CMX4
PRM72 to PRM75, PRM1072 to PRM1075	For manufacturer setting	-
PRM76, PRM1076	Internal torque limit 2	TL2
PRM77 to PRM84, PRM1077 to PRM1084	For manufacturer setting	-

■Status display ([MELSERVO-J2M-*DU])

Virtual device name	Name	Symbol
ST0	Cumulative feedback pulses	-
ST1	Servo motor speed	-
ST2	Droop pulses	-
ST3	Cumulative command pulses	-
ST4	Command pulse frequency	-
ST5	Effective load ratio	-
ST6	Peak load ratio	-
ST7	Instantaneous torque	-
ST8	Within one-revolution position	-
ST9	ABS counter	-
ST10	Load inertia moment ratio	-

■Alarm ([MELSERVO-J2M-*DU])

Virtual device name	Name	Symbol
AL0	Current alarm number	-
AL11	Servo status when alarm occurs, cumulative feedback pulses	-
AL12	Servo status when alarm occurs, servo motor speed	-
AL13	Servo status when alarm occurs, droop pulses	-
AL14	Servo status when alarm occurs, cumulative command pulses	-
AL15	Servo status when alarm occurs, command pulse frequency	-
AL16	Servo status when alarm occurs, effective load ratio	-
AL17	Servo status when alarm occurs, peak load ratio	-
AL18	Servo status when alarm occurs, instantaneous torque	-
AL19	Servo status when alarm occurs, within one-revolution position	-
AL20	Servo status when alarm occurs, ABS counter	-
AL21	Servo status when alarm occurs, load inertia moment ratio	-
AL200	Alarm number from Alarm History most recent alarm	-
AL201	Alarm number from Alarm History first alarm in past	-
AL202	Alarm number from Alarm History second alarm in past	-
AL203	Alarm number from Alarm History third alarm in past	-
AL204	Alarm number from Alarm History fourth alarm in past	-
AL205	Alarm number from Alarm History fifth alarm in past	-
AL210	Alarm occurrence time in alarm history most recent alarm	-
AL211	Alarm occurrence time in alarm history first alarm in past	-
AL212	Alarm occurrence time in alarm history second alarm in past	-
AL213	Alarm occurrence time in alarm history third alarm in past	-
AL214	Alarm occurrence time in alarm history fourth alarm in past	-
AL215	Alarm occurrence time in alarm history fifth alarm in past	-
AL230	Detailed alarm from Alarm History most recent alarm	-
AL231	Detailed alarm from Alarm History first alarm in past	-
AL232	Detailed alarm from Alarm History second alarm in past	-
AL233	Detailed alarm from Alarm History third alarm in past	-
AL234	Detailed alarm from Alarm History fourth alarm in past	-
AL235	Detailed alarm from Alarm History fifth alarm in past	-

■Input signal for test operation (for test operation) ([MELSERVO-J2M-*DU])

Virtual device name	Name	Symbol
TMI0	Input signal for test operation	-

When using the input signal for test operation (for test operation), note the following.

Precautions	Description
Writing a value to a virtual device using an object	Numerical input cannot be used. Use a word switch for writing.

■Forced output of signal pin (for test operation) ([MELSERVO-J2M-*DU])

Virtual device name	Name	Symbol
TMO0	Forced output of signal pin	-

When using the forced output of signal pin (for test operation), note the following.

Precautions	Description
Writing a value to a virtual device using an object	Numerical input cannot be used. Use a word switch for writing.

■Set data (for test operation) ([MELSERVO-J2M-*DU])

Virtual device name	Name	Symbol
TMD0	Writes the speed (test mode)	-
TMD1	Writes the acceleration/deceleration time constant (test mode)	-
TMD2	Writes the moving distance in pulses (test mode)	-

When using the set data (for test operation), note the following.

Precautions	Description
Writing a value to a virtual device using an object	Numerical input cannot be used. Use a word switch for writing.

Precautions for virtual servo amplifier devices ([MELSERVO-J2M-*DU])

For the precautions for virtual servo amplifier devices, refer to the following.

☞ Page 1555 Precautions for virtual servo amplifier devices ([MELSERVO-J2M-P8A])

[MELSERVO-J2S-*A]

GT27 GT25 GT23 GT21 GS25 GS21

Item	Reference
Specifications of bit devices	☞ Page 1565 Monitoring-supported bit devices ([MELSERVO-J2S-*A])
	☞ Page 1565 Availability of writing/reading data to/from bit devices ([MELSERVO-J2S-*A])
Specifications of word devices	☞ Page 1566 Monitoring-supported word devices ([MELSERVO-J2S-*A])
	☞ Page 1566 Availability of writing/reading data to/from word devices ([MELSERVO-J2S-*A])
Specifications of double-word devices	☞ Page 1567 Monitoring-supported double-word devices ([MELSERVO-J2S-*A])
	☞ Page 1567 Availability of writing/reading data to/from double-word devices ([MELSERVO-J2S-*A])
Specifications of virtual servo amplifier devices	☞ Page 1568 Virtual servo amplifier devices ([MELSERVO-J2S-*A])
	☞ Page 1572 Precautions for virtual servo amplifier devices ([MELSERVO-J2S-*A])

Monitoring-supported bit devices ([MELSERVO-J2S-*A])

The following table shows monitoring-supported virtual bit devices for servo amplifiers.

To check whether writing/reading data to/from each device is available, refer to the following.

☞ Page 1565 Availability of writing/reading data to/from bit devices ([MELSERVO-J2S-*A])

For details on virtual servo amplifier devices, refer to the following.

☞ Page 1568 Virtual servo amplifier devices ([MELSERVO-J2S-*A])

○: Available

×: Not available

Device name		Device No. representation	Setting range	Specifications of EG devices*1	
				Assignment to EG devices	Access using a client
SP	Servo amplifier request	Decimal	0 to 6	×	×
OM	Operation mode selection	Decimal	0 to 4	×	×
TMB	Instruction demand (for test operation)	Decimal	0 to 1	×	×

*1 For the devices assigned to EG devices (gateway devices) and the compatible clients, refer to the following.
GT Designer3 (GOT2000) Screen Design Manual

Availability of writing/reading data to/from bit devices ([MELSERVO-J2S-*A])

The following shows whether writing/reading data to/from bit devices is available by device type.

When the device type is other than the bit type, set the device No. in multiples of 16.

R/W: Both read and write

R/-: Read only

-/W: Write only

-/-: No read/write access

Device name	Device type				
	Bit	Byte (8 bits)	Word (16 bits)	Double-word (32 bits)	Quad-word (64 bits)
SP	-/W	-/-	-/-	-/-	-/-
OM	-/W	-/-	-/-	-/-	-/-
TMB	-/W	-/-	-/-	-/-	-/-

A

Monitoring-supported word devices ([MELSERVO-J2S-*A])

The following table shows monitoring-supported virtual word devices for servo amplifiers.

To check whether writing/reading data to/from each device is available, refer to the following.

☞ Page 1566 Availability of writing/reading data to/from word devices ([MELSERVO-J2S-*A])

For details on virtual servo amplifier devices, refer to the following.

☞ Page 1568 Virtual servo amplifier devices ([MELSERVO-J2S-*A])

○: Available

×: Not available

Device name		Device No. representation	Setting range	Specifications of EG devices*1	
				Assignment to EG devices	Access using a client
PRM	Parameter	Decimal	0 to 84 1000 to 1084	○	×
ST	Status display	Decimal	0 to 14	○	×
AL	Alarm (current alarm)	Decimal	0 to 1 11 to 25	○	×
AL	Alarm (alarm history)	Decimal	200 to 205 210 to 215 230 to 235	○	×
DI	External input signal	Decimal	0	×	×
DO	External output signal	Decimal	0	×	×

*1 For the devices assigned to EG devices (gateway devices) and the compatible clients, refer to the following.
📖GT Designer3 (GOT2000) Screen Design Manual

Availability of writing/reading data to/from word devices ([MELSERVO-J2S-*A])

The following shows the availability of writing/reading data to/from word devices by device type.

R/W: Both read and write

R/-: Read only

-/W: Write only

-/-: No read/write access

Device name	Device type			
	Word (16 bits)	Double-word (32 bits)	Quad-word (64 bits)	Bit of word data
PRM	R/W	R/W	-/-	-/-
ST	R/-	R/-	-/-	-/-
AL	R/-	R/-	-/-	-/-
DI	R/-	R/-	-/-	-/-
DO	R/-	R/-	-/-	-/-

Monitoring-supported double-word devices ([MELSERVO-J2S-*A])

The following table shows monitoring-supported virtual double-word devices for servo amplifiers.

To check whether writing/reading data to/from each device is available, refer to the following.

☞ Page 1567 Availability of writing/reading data to/from double-word devices ([MELSERVO-J2S-*A])

For details on virtual servo amplifier devices, refer to the following.

☞ Page 1568 Virtual servo amplifier devices ([MELSERVO-J2S-*A])

○: Available

×: Not available

Device name		Device No. representation	Setting range	Specifications of EG devices*1	
				Assignment to EG devices	Access using a client
TMI	Input signal for test operation (for test operation)	Decimal	0	×	×
TMO	Forced output of signal pin (for test operation)	Decimal	0	×	×
TMD	Set data (for test operation)	Decimal	0 to 2	×	×

*1 For the devices assigned to EG devices (gateway devices) and the compatible clients, refer to the following.
📖GT Designer3 (GOT2000) Screen Design Manual

Availability of writing/reading data to/from double-word devices ([MELSERVO-J2S-*A])

The following shows the availability of writing/reading data to/from double-word devices by device type.

R/W: Both read and write

R/-: Read only

-/W: Write only

-/-: No read/write access

Device name	Device type			
	Word (16 bits)	Double-word (32 bits)	Quad-word (64 bits)	Bit of double-word data
TMI	-/-	-/W	-/-	-/-
TMO	-/-	-/W	-/-	-/-
TMD	-/-	-/W	-/-	-/-

A

Virtual servo amplifier devices ([MELSERVO-J2S-*A])

The following shows the correspondence between the virtual devices used in the GOT and the servo amplifier data.

Virtual device name	Reference
SP	☞ Page 1568 Servo amplifier request ([MELSERVO-J2S-*A])
OM	☞ Page 1568 Operation mode selection ([MELSERVO-J2S-*A])
TMB	☞ Page 1568 Instruction demand (for test operation) ([MELSERVO-J2S-*A])
PRM	☞ Page 1569 Parameter ([MELSERVO-J2S-*A])
ST	☞ Page 1570 Status display ([MELSERVO-J2S-*A])
AL	☞ Page 1571 Alarm ([MELSERVO-J2S-*A])
DI	☞ Page 1572 External input signal ([MELSERVO-J2S-*A])
DO	☞ Page 1572 External output signal ([MELSERVO-J2S-*A])
TMI	☞ Page 1572 Input signal for test operation (for test operation) ([MELSERVO-J2S-*A])
TMO	☞ Page 1572 Forced output of signal pin (for test operation) ([MELSERVO-J2S-*A])
TMD	☞ Page 1572 Set data (for test operation) ([MELSERVO-J2S-*A])

■Servo amplifier request ([MELSERVO-J2S-*A])

Virtual device name	Name	Symbol
SP0	Status display data clear	-
SP1	Current alarm clear	-
SP2	Alarm history clear	-
SP3	External input signal prohibited	-
SP4	External output signal prohibited	-
SP5	External input signal resumed	-
SP6	External output signal resumed	-

When using the servo amplifier request, note the following.

Precautions	Description
When setting a device for a bit switch.	Do not select [Alternate] for [Switch Action] of the bit switch.

■Operation mode selection ([MELSERVO-J2S-*A])

Virtual device name	Name	Symbol
OM0	Normal mode (not test operation mode)	-
OM1	JOG operation	-
OM2	Positioning operation	-
OM3	Motorless operation	-
OM4	Output signal (DO) forced output	-

When using the operation mode selection, note the following.

Precautions	Description
When setting a device for a bit switch.	Do not select [Alternate] for [Switch Action] of the bit switch.

■Instruction demand (for test operation) ([MELSERVO-J2S-*A])

Virtual device name	Name	Symbol
TMB0	Clearing acceleration/deceleration time constant	-
TMB1	Temporary stop command	-

When using the instruction demand (for test operation), note the following.

Precautions	Description
When setting a device for a bit switch.	Do not select [Alternate] for [Switch Action] of the bit switch.

■Parameter ([MELSERVO-J2S-*A])

Use an appropriate device according to the write destination of the servo amplifier.

- PRM0 to PRM84: Writing data to the RAM of a servo amplifier.
- PRM1000 to PRM1084: Writing data to the EEPROM of a servo amplifier.

For the parameters prefixed by an asterisk (*), setting becomes effective when the power is turned off once and back on after setting the parameter data.

Virtual device name	Name	Symbol
PRM0, PRM1000	Control mode, regenerative brake option selection	*STY
PRM1, PRM1001	Function selection 1	*OP1
PRM2, PRM1002	Auto tuning	ATU
PRM3, PRM1003	Electronic gear numerator (Command pulse multiplying factor numerator)	CMX
PRM4, PRM1004	Electronic gear denominator (Command pulse multiplying factor denominator)	CDV
PRM5, PRM1005	In-position range	INP
PRM6, PRM1006	Position control gain 1	PG1
PRM7, PRM1007	Position command acceleration/deceleration time constant	PST
PRM8, PRM1008	Internal speed command1/limit1	SC1
PRM9, PRM1009	Internal speed command2/limit2	SC2
PRM10, PRM1010	Internal speed command3/limit3	SC3
PRM11, PRM1011	Acceleration time constant	STA
PRM12, PRM1012	Deceleration time constant	STB
PRM13, PRM1013	S-pattern acceleration/deceleration time constant	STC
PRM14, PRM1014	Torque command time constant	TQC
PRM15, PRM1015	Station number setting	*SNO
PRM16, PRM1016	Serial communication function selection, alarm history clear	*BPS
PRM17, PRM1017	Analog monitor output	MOD
PRM18, PRM1018	Status display selection	*DMD
PRM19, PRM1019	Parameter block	*BLK
PRM20, PRM1020	Function selection 2	*OP2
PRM21, PRM1021	Function selection 3 (Command pulse selection)	*OP3
PRM22, PRM1022	Function selection 4	*OP4
PRM23, PRM1023	Feed forward gain	FFC
PRM24, PRM1024	Zero speed	ZSP
PRM25, PRM1025	Analog speed command maximum speed/limit maximum speed	VCM
PRM26, PRM1026	Analog torque command maximum output	TLC
PRM27, PRM1027	Encoder output pulses	*ENR
PRM28, PRM1028	Internal torque limit 1	TL1
PRM29, PRM1029	Analog speed command offset/limit offset	VCO
PRM30, PRM1030	Analog torque command offset/limit offset	TLO
PRM31, PRM1031	Analog monitor 1 offset	MO1
PRM32, PRM1032	Analog monitor 2 offset	MO2
PRM33, PRM1033	Electromagnetic brake sequence output	MBR
PRM34, PRM1034	Ratio of load inertia moment to servo motor inertia moment	GD2
PRM35, PRM1035	Position control gain 2	PG2
PRM36, PRM1036	Speed control gain 1	VG1
PRM37, PRM1037	Speed control gain 2	VG2
PRM38, PRM1038	Speed integral compensation	VIC
PRM39, PRM1039	Speed differential compensation	VDC
PRM40, PRM1040	For manufacturer setting	-
PRM41, PRM1041	Input signal automatic ON selection	*DIA
PRM42, PRM1042	Input signal selection 1	*DI1
PRM43, PRM1043	Input signal selection 2 (CN1B-5)	*DI2
PRM44, PRM1044	Input signal selection 3 (CN1B-14)	*DI3
PRM45, PRM1045	Input signal selection 4 (CN1A-8)	*DI4

Virtual device name	Name	Symbol
PRM46, PRM1046	Input signal selection 5 (CN1B-7)	*DI5
PRM47, PRM1047	Input signal selection 6 (CN1B-8)	*DI6
PRM48, PRM1048	Input signal selection 7 (CN1B-9)	*DI7
PRM49, PRM1049	Output signal selection 1	*DO1
PRM50, PRM1050	For manufacturer setting	-
PRM51, PRM1051	Function selection 6	*OP6
PRM52, PRM1052	For manufacturer setting	-
PRM53, PRM1053	Function selection 8	*OP8
PRM54, PRM1054	Function selection 9	*OP9
PRM55, PRM1055	Function selection A	*OPA
PRM56, PRM1056	Serial communication time-out selection	SIC
PRM57, PRM1057	For manufacturer setting	-
PRM58, PRM1058	Machine resonance suppression filter 1	NH1
PRM59, PRM1059	Machine resonance suppression filter 2	NH2
PRM60, PRM1060	Low-pass filter, adaptive vibration suppression control	LPF
PRM61, PRM1061	Ratio of load inertia moment to servo motor inertia moment 2	GD2B
PRM62, PRM1062	Position control gain 2 changing ratio	PG2B
PRM63, PRM1063	Speed control gain 2 changing ratio	VG2B
PRM64, PRM1064	Speed integral compensation changing ratio	VICB
PRM65, PRM1065	Gain changing selection	*CDP
PRM66, PRM1066	Gain switching condition	CDS
PRM67, PRM1067	Gain switching time constant	CDT
PRM68, PRM1068	For manufacturer setting	-
PRM69, PRM1069	Command pulse multiplying factor numerator 2	CMX2
PRM70, PRM1070	Command pulse multiplying factor numerator 3	CMX3
PRM71, PRM1071	Command pulse multiplying factor numerator 4	CMX4
PRM72, PRM1072	Internal speed command4/limit4	SC4
PRM73, PRM1073	Internal speed command5/limit5	SC5
PRM74, PRM1074	Internal speed command6/limit6	SC6
PRM75, PRM1075	Internal speed command7/limit7	SC7
PRM76, PRM1076	Internal torque limit 2	TL2
PRM77 to PRM84, PRM1077 to PRM1084	For manufacturer setting	-

■Status display ([MELSERVO-J2S-*A])

Virtual device name	Name	Symbol
ST0	Cumulative feedback pulses	-
ST1	Servo motor speed	-
ST2	Droop pulses	-
ST3	Cumulative command pulses	-
ST4	Command pulse frequency	-
ST5	Analog speed command voltage/limit voltage	-
ST6	Analog torque command voltage/limit voltage	-
ST7	Regenerative load ratio	-
ST8	Effective load ratio	-
ST9	Peak load ratio	-
ST10	Instantaneous torque	-
ST11	Within one-revolution position	-
ST12	ABS counter	-
ST13	Load inertia moment ratio	-
ST14	Bus voltage	-

■Alarm ([MELSERVO-J2S-*A])

Virtual device name	Name	Symbol
AL0	Current alarm number	-
AL1	Detailed data of current alarms	-
AL11	Servo status when alarm occurs, cumulative feedback pulses	-
AL12	Servo status when alarm occurs, servo motor speed	-
AL13	Servo status when alarm occurs, droop pulses	-
AL14	Servo status when alarm occurs, cumulative command pulses	-
AL15	Servo status when alarm occurs, command pulse frequency	-
AL16	Servo status when alarm occurs, analog speed command voltage/limit voltage	-
AL17	Servo status when alarm occurs, analog torque command voltage/limit voltage	-
AL18	Servo status when alarm occurs, regenerative load ratio	-
AL19	Servo status when alarm occurs, effective load ratio	-
AL20	Servo status when alarm occurs, peak load ratio	-
AL21	Servo status when alarm occurs, Instantaneous torque	-
AL22	Servo status when alarm occurs, within one-revolution position	-
AL23	Servo status when alarm occurs, ABS counter	-
AL24	Servo status when alarm occurs, load inertia moment ratio	-
AL25	Servo status when alarm occurs, Bus voltage	-
AL200	Alarm number from Alarm History most recent alarm	-
AL201	Alarm number from Alarm History first alarm in past	-
AL202	Alarm number from Alarm History second alarm in past	-
AL203	Alarm number from Alarm History third alarm in past	-
AL204	Alarm number from Alarm History fourth alarm in past	-
AL205	Alarm number from Alarm History fifth alarm in past	-
AL210	Alarm occurrence time in alarm history most recent alarm	-
AL211	Alarm occurrence time in alarm history first alarm in past	-
AL212	Alarm occurrence time in alarm history second alarm in past	-
AL213	Alarm occurrence time in alarm history third alarm in past	-
AL214	Alarm occurrence time in alarm history fourth alarm in past	-
AL215	Alarm occurrence time in alarm history fifth alarm in past	-
AL230	Detailed alarm from Alarm History most recent alarm	-
AL231	Detailed alarm from Alarm History first alarm in past	-
AL232	Detailed alarm from Alarm History second alarm in past	-
AL233	Detailed alarm from Alarm History third alarm in past	-
AL234	Detailed alarm from Alarm History fourth alarm in past	-
AL235	Detailed alarm from Alarm History fifth alarm in past	-

■External input signal ([MELSERVO-J2S-*A])

Virtual device name	Name	Symbol	Data to be read from the servo amplifier
DI0	External input pin statuses	-	For the mapping of the bits corresponding to the data to be read, refer to the following. 📖MR-J2S-_A Instruction Manual

■External output signal ([MELSERVO-J2S-*A])

Virtual device name	Name	Symbol	Data to be read from the servo amplifier
DO0	External output pin statuses	-	For the mapping of the bits corresponding to the data to be read, refer to the following. 📖MR-J2S-_A Instruction Manual

■Input signal for test operation (for test operation) ([MELSERVO-J2S-*A])

Virtual device name	Name	Symbol
TMI0	Input signal for test operation	-

When using the input signal for test operation (for test operation), note the following.

Precautions	Description
Writing a value to a virtual device using an object	Numerical input cannot be used. Use a word switch for writing.

■Forced output of signal pin (for test operation) ([MELSERVO-J2S-*A])

Virtual device name	Name	Symbol
TMO0	Forced output of signal pin	-

When using the forced output of signal pin (for test operation), note the following.

Precautions	Description
Writing a value to a virtual device using an object	Numerical input cannot be used. Use a word switch for writing.

■Set data (for test operation) ([MELSERVO-J2S-*A])

Virtual device name	Name	Symbol
TMD0	Writes the speed (test mode)	-
TMD1	Writes the acceleration/deceleration time constant (test mode)	-
TMD2	Writes the moving distance in pulses (test mode)	-

When using the set data (for test operation), note the following.

Precautions	Description
Writing a value to a virtual device using an object	Numerical input cannot be used. Use a word switch for writing.

Precautions for virtual servo amplifier devices ([MELSERVO-J2S-*A])

For the precautions for virtual servo amplifier devices, refer to the following.

☞ Page 1555 Precautions for virtual servo amplifier devices ([MELSERVO-J2M-P8A])

[MELSERVO-J2S-*CP]

GT27 GT25 GT23 GT21 GS25 GS21

Item	Reference
Specifications of bit devices	☞ Page 1573 Monitoring-supported bit devices ([MELSERVO-J2S-*CP])
	☞ Page 1573 Availability of writing/reading data to/from bit devices ([MELSERVO-J2S-*CP])
Specifications of word devices	☞ Page 1574 Monitoring-supported word devices ([MELSERVO-J2S-*CP])
	☞ Page 1575 Availability of writing/reading data to/from word devices ([MELSERVO-J2S-*CP])
Specifications of double-word devices	☞ Page 1575 Monitoring-supported double-word devices ([MELSERVO-J2S-*CP])
	☞ Page 1576 Availability of writing/reading data to/from double-word devices ([MELSERVO-J2S-*CP])
Specifications of virtual servo amplifier devices	☞ Page 1576 Virtual servo amplifier devices ([MELSERVO-J2S-*CP])
	☞ Page 1582 Precautions for virtual servo amplifier devices ([MELSERVO-J2S-*CP])

Monitoring-supported bit devices ([MELSERVO-J2S-*CP])

The following table shows monitoring-supported virtual bit devices for servo amplifiers.

To check whether writing/reading data to/from each device is available, refer to the following.

☞ Page 1573 Availability of writing/reading data to/from bit devices ([MELSERVO-J2S-*CP])

For details on virtual servo amplifier devices, refer to the following.

☞ Page 1576 Virtual servo amplifier devices ([MELSERVO-J2S-*CP])

○: Available

×: Not available

Device name		Device No. representation	Setting range	Specifications of EG devices*1	
				Assignment to EG devices	Access using a client
SP	Servo amplifier request	Decimal	0 to 6	×	×
OM	Operation mode selection	Decimal	0 to 4	×	×
TMB	Instruction demand (for test operation)	Decimal	0 to 1	×	×

*1 For the devices assigned to EG devices (gateway devices) and the compatible clients, refer to the following.
📖GT Designer3 (GOT2000) Screen Design Manual

Availability of writing/reading data to/from bit devices ([MELSERVO-J2S-*CP])

The following shows whether writing/reading data to/from bit devices is available by device type.

When the device type is other than the bit type, set the device No. in multiples of 16.

R/W: Both read and write

R/-: Read only

-/W: Write only

-/-: No read/write access

Device name	Device type				
	Bit	Byte (8 bits)	Word (16 bits)	Double-word (32 bits)	Quad-word (64 bits)
SP	-/W	-/-	-/-	-/-	-/-
OM	-/W	-/-	-/-	-/-	-/-
TMB	-/W	-/-	-/-	-/-	-/-

A

Monitoring-supported word devices ([MELSERVO-J2S-*CP])

The following table shows monitoring-supported virtual word devices for servo amplifiers.

To check whether writing/reading data to/from each device is available, refer to the following.

☞ Page 1575 Availability of writing/reading data to/from word devices ([MELSERVO-J2S-*CP])

For details on virtual servo amplifier devices, refer to the following.

☞ Page 1576 Virtual servo amplifier devices ([MELSERVO-J2S-*CP])

○: Available

×: Not available

Device name		Device No. representation	Setting range	Specifications of EG devices*1	
				Assignment to EG devices	Access using a client
PRM	Parameter	Decimal	0 to 90 1000 to 1090	○	×
ST	Status display	Decimal	0 to 16	○	×
AL	Alarm (current alarm)	Decimal	0 to 1 11 to 27	○	×
AL	Alarm (alarm history)	Decimal	200 to 205 210 to 215 230 to 235	○	×
POS	Point table (position)	Decimal	1 to 31 1001 to 1031	○	×
SPD	Point table (speed)	Decimal	1 to 31 1001 to 1031	○	×
ACT	Point table (acceleration time constant)	Decimal	1 to 31 1001 to 1031	○	×
DCT	Point table (deceleration time constant)	Decimal	1 to 31 1001 to 1031	○	×
DWL	Point table (dwell)	Decimal	1 to 31 1001 to 1031	○	×
AUX	Point table (auxiliary function)	Decimal	1 to 31 1001 to 1031	○	×
DI	External input signal	Decimal	0 to 2	×	×
DO	External output signal	Decimal	0 to 1	×	×

*1 For the devices assigned to EG devices (gateway devices) and the compatible clients, refer to the following.
📖GT Designer3 (GOT2000) Screen Design Manual

Availability of writing/reading data to/from word devices ([MELSERVO-J2S-*CP])

The following shows the availability of writing/reading data to/from word devices by device type.

R/W: Both read and write

R/-: Read only

-/W: Write only

-/-: No read/write access

Device name	Device type			
	Word (16 bits)	Double-word (32 bits)	Quad-word (64 bits)	Bit of word data
PRM	R/W	R/W	-/-	-/-
ST	R/-	R/-	-/-	-/-
AL	R/-	R/-	-/-	-/-
POS	R/W	R/W	-/-	-/-
SPD	R/W	R/W	-/-	-/-
ACT	R/W	R/W	-/-	-/-
DCT	R/W	R/W	-/-	-/-
DWL	R/W	R/W	-/-	-/-
AUX	R/W	R/W	-/-	-/-
DI*1	R/-	R/W	-/-	-/-
DO	R/-	R/-	-/-	-/-

*1 Only reading is available for DI0 to DI1.

Monitoring-supported double-word devices ([MELSERVO-J2S-*CP])

The following table shows monitoring-supported virtual double-word devices for servo amplifiers.

To check whether writing/reading data to/from each device is available, refer to the following.

☞ Page 1576 Availability of writing/reading data to/from double-word devices ([MELSERVO-J2S-*CP])

For details on virtual servo amplifier devices, refer to the following.

☞ Page 1576 Virtual servo amplifier devices ([MELSERVO-J2S-*CP])

○: Available

×: Not available

Device name		Device No. representation	Setting range	Specifications of EG devices*1	
				Assignment to EG devices	Access using a client
TMI	Input signal for test operation (for test operation)	Decimal	0	×	×
TMO	Forced output of signal pin (for test operation)	Decimal	0	×	×
TMD	Set data (for test operation)	Decimal	0 to 2	×	×

*1 For the devices assigned to EG devices (gateway devices) and the compatible clients, refer to the following.
GT Designer3 (GOT2000) Screen Design Manual

Availability of writing/reading data to/from double-word devices ([MELSERVO-J2S-*CP])

The following shows the availability of writing/reading data to/from double-word devices by device type.

R/W: Both read and write

R/-: Read only

-/W: Write only

-/-: No read/write access

Device name	Device type			
	Word (16 bits)	Double-word (32 bits)	Quad-word (64 bits)	Bit of double-word data
TMI	-/-	-/W	-/-	-/-
TMO	-/-	-/W	-/-	-/-
TMD	-/-	-/W	-/-	-/-

Virtual servo amplifier devices ([MELSERVO-J2S-*CP])

The following shows the correspondence between the virtual devices used in the GOT and the servo amplifier data.

Virtual device name	Reference
SP	☞ Page 1577 Servo amplifier request ([MELSERVO-J2S-*CP])
OM	☞ Page 1577 Operation mode selection ([MELSERVO-J2S-*CP])
TMB	☞ Page 1577 Instruction demand (for test operation) ([MELSERVO-J2S-*CP])
PRM	☞ Page 1578 Parameter ([MELSERVO-J2S-*CP])
ST	☞ Page 1579 Status display ([MELSERVO-J2S-*CP])
AL	☞ Page 1580 Alarm ([MELSERVO-J2S-*CP])
POS	☞ Page 1581 Point table (position) ([MELSERVO-J2S-*CP])
SPD	☞ Page 1581 Point table (speed) ([MELSERVO-J2S-*CP])
ACT	☞ Page 1581 Point table (acceleration time constant) ([MELSERVO-J2S-*CP])
DCT	☞ Page 1581 Point table (deceleration time constant) ([MELSERVO-J2S-*CP])
DWL	☞ Page 1581 Point table (dwell) ([MELSERVO-J2S-*CP])
AUX	☞ Page 1581 Point table (auxiliary function) ([MELSERVO-J2S-*CP])
DI	☞ Page 1582 External input signal ([MELSERVO-J2S-*CP])
DO	☞ Page 1582 External output signal ([MELSERVO-J2S-*CP])
TMI	☞ Page 1582 Input signal for test operation (for test operation) ([MELSERVO-J2S-*CP])
TMO	☞ Page 1582 Forced output of signal pin (for test operation) ([MELSERVO-J2S-*CP])
TMD	☞ Page 1582 Set data (for test operation) ([MELSERVO-J2S-*CP])

■Servo amplifier request ([MELSERVO-J2S-*CP])

Virtual device name	Name	Symbol
SP0	Status display data clear	-
SP1	Current alarm clear	-
SP2	Alarm history clear	-
SP3	External input signal prohibited	-
SP4	External output signal prohibited	-
SP5	External input signal resumed	-
SP6	External output signal resumed	-

When using the servo amplifier request, note the following.

Precautions	Description
When setting a device for a bit switch.	Do not select [Alternate] for [Switch Action] of the bit switch.

■Operation mode selection ([MELSERVO-J2S-*CP])

Virtual device name	Name	Symbol
OM0	Normal mode (not test operation mode)	-
OM1	JOG operation	-
OM2	Positioning operation	-
OM3	Motorless operation	-
OM4	Output signal (DO) forced output	-

When using the operation mode selection, note the following.

Precautions	Description
When setting a device for a bit switch.	Do not select [Alternate] for [Switch Action] of the bit switch.

■Instruction demand (for test operation) ([MELSERVO-J2S-*CP])

Virtual device name	Name	Symbol
TMB0	Clearing acceleration/deceleration time constant	-
TMB1	Temporary stop command	-

When using the instruction demand (for test operation), note the following.

Precautions	Description
When setting a device for a bit switch.	Do not select [Alternate] for [Switch Action] of the bit switch.

■Parameter ([MELSERVO-J2S-*CP])

Use an appropriate device according to the write destination of the servo amplifier.

- PRM0 to PRM90: Writing data to the RAM of a servo amplifier.
- PRM1000 to PRM1090: Writing data to the EEPROM of a servo amplifier.

For the parameters prefixed by an asterisk (*), setting becomes effective when the power is turned off once and back on after setting the parameter data.

Virtual device name	Name	Symbol
PRM0, PRM1000	Command system/regenerative brake option selection	*STY
PRM1, PRM1001	Feeding function selection	*FTY
PRM2, PRM1002	Function selection 1	*OP1
PRM3, PRM1003	Auto tuning	ATU
PRM4, PRM1004	Electronic gear numerator	*CMX
PRM5, PRM1005	Electronic gear denominator	*CDV
PRM6, PRM1006	In-position range	INP
PRM7, PRM1007	Position control gain 1	PG1
PRM8, PRM1008	Home position return type	*ZTY
PRM9, PRM1009	Home position return speed	ZRF
PRM10, PRM1010	Creep speed	CRF
PRM11, PRM1011	Home position shift distance	ZST
PRM12, PRM1012	Rough match output range	CRP
PRM13, PRM1013	Jog speed	JOG
PRM14, PRM1014	S-pattern acceleration/deceleration time constant	*STC
PRM15, PRM1015	Station number setting	*SNO
PRM16, PRM1016	Serial communication function selection, alarm history clear	*BPS
PRM17, PRM1017	Analog monitor output	MOD
PRM18, PRM1018	Status display selection	*DMD
PRM19, PRM1019	Parameter block	*BLK
PRM20, PRM1020	Function selection 2	*OP2
PRM21, PRM1021	For manufacturer setting	-
PRM22, PRM1022	Function selection 4	*OP4
PRM23, PRM1023	Serial communication time-out selection	SIC
PRM24, PRM1024	Feed forward gain	FFC
PRM25, PRM1025	Override offset	VCO
PRM26, PRM1026	Torque limit offset	TLO
PRM27, PRM1027	Encoder output pulses	*ENR
PRM28, PRM1028	Internal torque limit 1	TL1
PRM29, PRM1029	Internal torque limit 2	TL2
PRM30, PRM1030	Backlash compensation	*BKC
PRM31, PRM1031	Analog monitor 1 offset	MO1
PRM32, PRM1032	Analog monitor 2 offset	MO2
PRM33, PRM1033	Electromagnetic brake sequence output	MBR
PRM34, PRM1034	Ratio of load inertia moment to servo motor inertia moment	GD2
PRM35, PRM1035	Position control gain 2	PG2
PRM36, PRM1036	Speed control gain 1	VG1
PRM37, PRM1037	Speed control gain 2	VG2
PRM38, PRM1038	Speed integral compensation	VIC
PRM39, PRM1039	Speed differential compensation	VDC
PRM40 to PRM41, PRM1040 to PRM1041	For manufacturer setting	-
PRM42, PRM1042	Home position return position data	*ZPS
PRM43, PRM1043	Moving distance after proximity dog	DCT
PRM44, PRM1044	Stopper type home position return stopper time	ZTM
PRM45, PRM1045	Stopper type home position return torque limit value	ZTT

Virtual device name	Name	Symbol
PRM46, PRM1046	Software limit +	*LMP
PRM47, PRM1047		
PRM48, PRM1048	Software limit -	*LMN
PRM49, PRM1049		
PRM50, PRM1050	Position range output address +	*LPP
PRM51, PRM1051		
PRM52, PRM1052	Position range output address -	*LNP
PRM53, PRM1053		
PRM54, PRM1054	For manufacturer setting	-
PRM55, PRM1055	Function selection 6	*OP6
PRM56, PRM1056	For manufacturer setting	-
PRM57, PRM1057	Function selection 8	*OP8
PRM58, PRM1058	Function selection 9	*OP9
PRM59, PRM1059	Function selection A	*OPA
PRM60, PRM1060	For manufacturer setting	-
PRM61, PRM1061	Machine resonance suppression filter 1	NH1
PRM62, PRM1062	Machine resonance suppression filter 2	NH2
PRM63, PRM1063	Low-pass filter, adaptive vibration suppression control	LPF
PRM64, PRM1064	Ratio of load inertia moment to servo motor inertia moment 2	GD2B
PRM65, PRM1065	Position control gain 2 changing ratio	PG2B
PRM66, PRM1066	Speed control gain 2 changing ratio	VG2B
PRM67, PRM1067	Speed integral compensation changing ratio	VICB
PRM68, PRM1068	Gain changing selection	*CDP
PRM69, PRM1069	Gain switching condition	CDS
PRM70, PRM1070	Gain switching time constant	CDT
PRM71 to PRM90, PRM1071 to PRM1090	For manufacturer setting	-

■Status display ([MELSERVO-J2S-*CP])

Virtual device name	Name	Symbol
ST0	Current position	-
ST1	Command position	-
ST2	Command remaining distance	-
ST3	Point table No.	-
ST4	Cumulative feedback pulses	-
ST5	Servo motor speed	-
ST6	Droop pulses	-
ST7	Override	-
ST8	Torque limit voltage	-
ST9	Regenerative load ratio	-
ST10	Effective load ratio	-
ST11	Peak load ratio	-
ST12	Instantaneous torque	-
ST13	Within one-revolution position	-
ST14	ABS counter	-
ST15	Load inertia moment ratio	-
ST16	Bus voltage	-

■Alarm ([MELSERVO-J2S-*CP])

Virtual device name	Name	Symbol
AL0	Current alarm number	-
AL1	Detailed data of current alarms	-
AL11	Servo status when alarm occurs, current position	-
AL12	Servo status when alarm occurs, command position	-
AL13	Servo status when alarm occurs, command remaining distance	-
AL14	Servo status when alarm occurs, point table No.	-
AL15	Servo status when alarm occurs, cumulative feedback pulses	-
AL16	Servo status when alarm occurs, servo motor speed	-
AL17	Servo status when alarm occurs, droop pulses	-
AL18	Servo status when alarm occurs, override	-
AL19	Servo status when alarm occurs, torque limit voltage	-
AL20	Servo status when alarm occurs, regenerative load ratio	-
AL21	Servo status when alarm occurs, effective load ratio	-
AL22	Servo status when alarm occurs, peak load ratio	-
AL23	Servo status when alarm occurs, instantaneous torque	-
AL24	Servo status when alarm occurs, within one-revolution position	-
AL25	Servo status when alarm occurs, ABS counter	-
AL26	Servo status when alarm occurs, load inertia moment ratio	-
AL27	Servo status when alarm occurs, Bus voltage	-
AL200	Alarm number from Alarm History most recent alarm	-
AL201	Alarm number from Alarm History first alarm in past	-
AL202	Alarm number from Alarm History second alarm in past	-
AL203	Alarm number from Alarm History third alarm in past	-
AL204	Alarm number from Alarm History fourth alarm in past	-
AL205	Alarm number from Alarm History fifth alarm in past	-
AL210	Alarm occurrence time in alarm history most recent alarm	-
AL211	Alarm occurrence time in alarm history first alarm in past	-
AL212	Alarm occurrence time in alarm history second alarm in past	-
AL213	Alarm occurrence time in alarm history third alarm in past	-
AL214	Alarm occurrence time in alarm history fourth alarm in past	-
AL215	Alarm occurrence time in alarm history fifth alarm in past	-
AL230	Detailed alarm from Alarm History most recent alarm	-
AL231	Detailed alarm from Alarm History first alarm in past	-
AL232	Detailed alarm from Alarm History second alarm in past	-
AL233	Detailed alarm from Alarm History third alarm in past	-
AL234	Detailed alarm from Alarm History fourth alarm in past	-
AL235	Detailed alarm from Alarm History fifth alarm in past	-

■Point table (position) ([MELSERVO-J2S-*CP])

Use an appropriate device according to the write destination of the servo amplifier.

- POS1 to POS31: Writing data to the RAM of a servo amplifier.
- POS1001 to POS1031: Writing data to the EEPROM of a servo amplifier.

Virtual device name	Name	Symbol
POS1 to POS31, POS1001 to POS1031	Point table/position data No. 1 to No. 31	-

■Point table (speed) ([MELSERVO-J2S-*CP])

Use an appropriate device according to the write destination of the servo amplifier.

- SPD1 to SPD31: Writing data to the RAM of a servo amplifier.
- SPD1001 to SPD1031: Writing data to the EEPROM of a servo amplifier.

Virtual device name	Name	Symbol
SPD1 to SPD31, SPD1001 to SPD1031	Point table/speed data No. 1 to No. 31	-

■Point table (acceleration time constant) ([MELSERVO-J2S-*CP])

Use an appropriate device according to the write destination of the servo amplifier.

- ACT1 to ACT31: Writing data to the RAM of a servo amplifier.
- ACT1001 to ACT1031: Writing data to the EEPROM of a servo amplifier.

Virtual device name	Name	Symbol
ACT1 to ACT31, ACT1001 to ACT1031	Point table/acceleration time constant No. 1 to No. 31	-

■Point table (deceleration time constant) ([MELSERVO-J2S-*CP])

Use an appropriate device according to the write destination of the servo amplifier.

- DCT1 to DCT31: Writing data to the RAM of a servo amplifier.
- DCT1001 to DCT1031: Writing data to the EEPROM of a servo amplifier.

Virtual device name	Name	Symbol
DCT1 to DCT31, DCT1001 to DCT1031	Point table/deceleration time constant No. 1 to No. 31	-

■Point table (dwell) ([MELSERVO-J2S-*CP])

Use an appropriate device according to the write destination of the servo amplifier.

- DWL1 to DWL31: Writing data to the RAM of a servo amplifier.
- DWL1001 to DWL1031: Writing data to the EEPROM of a servo amplifier.

Virtual device name	Name	Symbol
DWL1 to DWL31, DWL1001 to DWL1031	Point table/dwell No. 1 to No. 31	-

■Point table (auxiliary function) ([MELSERVO-J2S-*CP])

Use an appropriate device according to the write destination of the servo amplifier.

- AUX1 to AUX31: Writing data to the RAM of a servo amplifier.
- AUX1001 to AUX1031: Writing data to the EEPROM of a servo amplifier.

Virtual device name	Name	Symbol
AUX1 to AUX31, AUX1001 to AUX1031	Point table/auxiliary function No. 1 to No. 31	-

■External input signal ([MELSERVO-J2S-*CP])

Virtual device name	Name	Symbol	Data to be read from the servo amplifier
DI0	Input device statuses	-	For the mapping of the bits corresponding to the data to be read, refer to the following. 📖MR-J2S-_CP Instruction Manual
DI1	External input pin statuses	-	
DI2	Statuses of input devices switched on through communication	-	

■External output signal ([MELSERVO-J2S-*CP])

Virtual device name	Name	Symbol	Data to be read from the servo amplifier
DO0	Output device statuses	-	For the mapping of the bits corresponding to the data to be read, refer to the following. 📖MR-J2S-_CP Instruction Manual
DO1	External output pin statuses	-	

■Input signal for test operation (for test operation) ([MELSERVO-J2S-*CP])

Virtual device name	Name	Symbol
TMI0	Input signal for test operation	-

When using the input signal for test operation (for test operation), note the following.

Precautions	Description
Writing a value to a virtual device using an object	Numerical input cannot be used. Use a word switch for writing.

■Forced output of signal pin (for test operation) ([MELSERVO-J2S-*CP])

Virtual device name	Name	Symbol
TMO0	Forced output of signal pin	-

When using the forced output of signal pin (for test operation), note the following.

Precautions	Description
Writing a value to a virtual device using an object	Numerical input cannot be used. Use a word switch for writing.

■Set data (for test operation) ([MELSERVO-J2S-*CP])

Virtual device name	Name	Symbol
TMD0	Writes the speed (test mode)	-
TMD1	Writes the acceleration/deceleration time constant (test mode)	-
TMD2	Writes the moving distance in pulses (test mode)	-

When using the set data (for test operation), note the following.

Precautions	Description
Writing a value to a virtual device using an object	Numerical input cannot be used. Use a word switch for writing.

Precautions for virtual servo amplifier devices ([MELSERVO-J2S-*CP])

For the precautions for virtual servo amplifier devices, refer to the following.

☞ Page 1555 Precautions for virtual servo amplifier devices ([MELSERVO-J2M-P8A])

[MELSERVO-J2S-*CL]

GT27 GT25 GT23 GT21 GS25 GS21

Item	Reference
Specifications of bit devices	☞ Page 1583 Monitoring-supported bit devices ([MELSERVO-J2S-*CL])
	☞ Page 1583 Availability of writing/reading data to/from bit devices ([MELSERVO-J2S-*CL])
Specifications of word devices	☞ Page 1584 Monitoring-supported word devices ([MELSERVO-J2S-*CL])
	☞ Page 1584 Availability of writing/reading data to/from word devices ([MELSERVO-J2S-*CL])
Specifications of double-word devices	☞ Page 1585 Monitoring-supported double-word devices ([MELSERVO-J2S-*CL])
	☞ Page 1585 Availability of writing/reading data to/from double-word devices ([MELSERVO-J2S-*CL])
Specifications of virtual servo amplifier devices	☞ Page 1586 Virtual servo amplifier devices ([MELSERVO-J2S-*CL])
	☞ Page 1591 Precautions for virtual servo amplifier devices ([MELSERVO-J2S-*CL])

Monitoring-supported bit devices ([MELSERVO-J2S-*CL])

The following table shows monitoring-supported virtual bit devices for servo amplifiers.

To check whether writing/reading data to/from each device is available, refer to the following.

☞ Page 1583 Availability of writing/reading data to/from bit devices ([MELSERVO-J2S-*CL])

For details on virtual servo amplifier devices, refer to the following.

☞ Page 1586 Virtual servo amplifier devices ([MELSERVO-J2S-*CL])

○: Available

×: Not available

Device name		Device No. representation	Setting range	Specifications of EG devices*1	
				Assignment to EG devices	Access using a client
SP	Servo amplifier request	Decimal	0 to 6	×	×
OM	Operation mode selection	Decimal	0 to 4	×	×
TMB	Instruction demand (for test operation)	Decimal	0 to 1	×	×

*1 For the devices assigned to EG devices (gateway devices) and the compatible clients, refer to the following.
📖GT Designer3 (GOT2000) Screen Design Manual

Availability of writing/reading data to/from bit devices ([MELSERVO-J2S-*CL])

The following shows whether writing/reading data to/from bit devices is available by device type.

When the device type is other than the bit type, set the device No. in multiples of 16.

R/W: Both read and write

R/-: Read only

-/W: Write only

-/-: No read/write access

Device name	Device type				
	Bit	Byte (8 bits)	Word (16 bits)	Double-word (32 bits)	Quad-word (64 bits)
SP	-/W	-/-	-/-	-/-	-/-
OM	-/W	-/-	-/-	-/-	-/-
TMB	-/W	-/-	-/-	-/-	-/-

A

Monitoring-supported word devices ([MELSERVO-J2S-*CL])

The following table shows monitoring-supported virtual word devices for servo amplifiers.

To check whether writing/reading data to/from each device is available, refer to the following.

☞ Page 1584 Availability of writing/reading data to/from word devices ([MELSERVO-J2S-*CL])

For details on virtual servo amplifier devices, refer to the following.

☞ Page 1586 Virtual servo amplifier devices ([MELSERVO-J2S-*CL])

○: Available

×: Not available

Device name		Device No. representation	Setting range	Specifications of EG devices*1	
				Assignment to EG devices	Access using a client
PRM	Parameter	Decimal	0 to 90 1000 to 1090	○	×
ST	Status display	Decimal	0 to 17	○	×
AL	Alarm (current alarm)	Decimal	0 to 1 11 to 28	○	×
AL	Alarm (alarm history)	Decimal	200 to 205 210 to 215 230 to 235	○	×
DI	External input signal	Decimal	0 to 2	×	×
DO	External output signal	Decimal	0 to 1	×	×

*1 For the devices assigned to EG devices (gateway devices) and the compatible clients, refer to the following.
📖GT Designer3 (GOT2000) Screen Design Manual

Availability of writing/reading data to/from word devices ([MELSERVO-J2S-*CL])

The following shows the availability of writing/reading data to/from word devices by device type.

R/W: Both read and write

R/-: Read only

-/W: Write only

-/-: No read/write access

Device name	Device type			
	Word (16 bits)	Double-word (32 bits)	Quad-word (64 bits)	Bit of word data
PRM	R/W	R/W	-/-	-/-
ST	R/-	R/-	-/-	-/-
AL	R/-	R/-	-/-	-/-
DI*1	R/-	R/W	-/-	-/-
DO	R/-	R/-	-/-	-/-

*1 Only reading is available for DI0 to DI1.

Monitoring-supported double-word devices ([MELSERVO-J2S-*CL])

The following table shows monitoring-supported virtual double-word devices for servo amplifiers.

To check whether writing/reading data to/from each device is available, refer to the following.

☞ Page 1585 Availability of writing/reading data to/from double-word devices ([MELSERVO-J2S-*CL])

For details on virtual servo amplifier devices, refer to the following.

☞ Page 1586 Virtual servo amplifier devices ([MELSERVO-J2S-*CL])

○: Available

×: Not available

Device name		Device No. representation	Setting range	Specifications of EG devices*1	
				Assignment to EG devices	Access using a client
LD	Current position latch data	Decimal	1	×	×
RR*2	Value of the general-purpose register (Rx)	Decimal	1 to 4 1001 to 1004	×	×
RD	Value of the general-purpose register (Dx)	Decimal	1 to 4	×	×
TMI	Input signal for test operation (for test operation)	Decimal	0	×	×
TMO	Forced output of signal pin (for test operation)	Decimal	0	×	×
TMD	Set data (for test operation)	Decimal	0 to 2	×	×

*1 For the devices assigned to EG devices (gateway devices) and the compatible clients, refer to the following.
📖GT Designer3 (GOT2000) Screen Design Manual

*2 Use the integer number when writing parameters to Rx.

Availability of writing/reading data to/from double-word devices ([MELSERVO-J2S-*CL])

The following shows the availability of writing/reading data to/from double-word devices by device type.

R/W: Both read and write

R/-: Read only

-/W: Write only

-/-: No read/write access

Device name	Device type			
	Word (16 bits)	Double-word (32 bits)	Quad-word (64 bits)	Bit of double-word data
LD	-/-	R/-	-/-	-/-
RR	-/-	R/W	-/-	-/-
RD	-/-	R/W	-/-	-/-
TMI	-/-	-/W	-/-	-/-
TMO	-/-	-/W	-/-	-/-
TMD	-/-	-/W	-/-	-/-

A

Virtual servo amplifier devices ([MELSERVO-J2S-*CL])

The following shows the correspondence between the virtual devices used in the GOT and the servo amplifier data.

Virtual device name	Reference
SP	☞ Page 1586 Servo amplifier request ([MELSERVO-J2S-*CL])
OM	☞ Page 1586 Operation mode selection ([MELSERVO-J2S-*CL])
TMB	☞ Page 1586 Instruction demand (for test operation) ([MELSERVO-J2S-*CL])
PRM	☞ Page 1587 Parameter ([MELSERVO-J2S-*CL])
ST	☞ Page 1588 Status display ([MELSERVO-J2S-*CL])
AL	☞ Page 1589 Alarm ([MELSERVO-J2S-*CL])
DI	☞ Page 1589 External input signal ([MELSERVO-J2S-*CL])
DO	☞ Page 1590 External output signal ([MELSERVO-J2S-*CL])
LD	☞ Page 1590 Current position latch data ([MELSERVO-J2S-*CL])
RR	☞ Page 1590 Value of the general-purpose register (Rx) ([MELSERVO-J2S-*CL])
RD	☞ Page 1590 Value of the general-purpose register (Dx) ([MELSERVO-J2S-*CL])
TMI	☞ Page 1590 Input signal for test operation (for test operation) ([MELSERVO-J2S-*CL])
TMO	☞ Page 1590 Forced output of signal pin (for test operation) ([MELSERVO-J2S-*CL])
TMD	☞ Page 1590 Set data (for test operation) ([MELSERVO-J2S-*CL])

■Servo amplifier request ([MELSERVO-J2S-*CL])

Virtual device name	Name	Symbol
SP0	Status display data clear	-
SP1	Current alarm clear	-
SP2	Alarm history clear	-
SP3	External input signal prohibited	-
SP4	External output signal prohibited	-
SP5	External input signal resumed	-
SP6	External output signal resumed	-

When using the servo amplifier request, note the following.

Precautions	Description
When setting a device for a bit switch.	Do not select [Alternate] for [Switch Action] of the bit switch.

■Operation mode selection ([MELSERVO-J2S-*CL])

Virtual device name	Name	Symbol
OM0	Normal mode (not test operation mode)	-
OM1	JOG operation	-
OM2	Positioning operation	-
OM3	Motorless operation	-
OM4	Output signal (DO) forced output	-

When using the operation mode selection, note the following.

Precautions	Description
When setting a device for a bit switch.	Do not select [Alternate] for [Switch Action] of the bit switch.

■Instruction demand (for test operation) ([MELSERVO-J2S-*CL])

Virtual device name	Name	Symbol
TMB0	Clearing acceleration/deceleration time constant	-
TMB1	Temporary stop command	-

When using the instruction demand (for test operation), note the following.

Precautions	Description
When setting a device for a bit switch.	Do not select [Alternate] for [Switch Action] of the bit switch.

■Parameter ([MELSERVO-J2S-*CL])

Use an appropriate device according to the write destination of the servo amplifier.

- PRM0 to PRM90: Writing data to the RAM of a servo amplifier.
- PRM1000 to PRM1090: Writing data to the EEPROM of a servo amplifier.

For the parameters prefixed by an asterisk (*), setting becomes effective when the power is turned off once and back on after setting the parameter data.

Virtual device name	Name	Symbol
PRM0, PRM1000	Command system/regenerative brake option selection	*STY
PRM1, PRM1001	Feeding function selection	*FTY
PRM2, PRM1002	Function selection 1	*OP1
PRM3, PRM1003	Auto tuning	ATU
PRM4, PRM1004	Electronic gear numerator	*CMX
PRM5, PRM1005	Electronic gear denominator	*CDV
PRM6, PRM1006	In-position range	INP
PRM7, PRM1007	Position control gain 1	PG1
PRM8, PRM1008	Home position return type	*ZTY
PRM9, PRM1009	Home position return speed	ZRF
PRM10, PRM1010	Creep speed	CRF
PRM11, PRM1011	Home position shift distance	ZST
PRM12, PRM1012	For manufacturer setting	-
PRM13, PRM1013	Jog speed	JOG
PRM14, PRM1014	S-pattern acceleration/deceleration time constant	*STC
PRM15, PRM1015	Station number setting	*SNO
PRM16, PRM1016	Serial communication function selection, alarm history clear	*BPS
PRM17, PRM1017	Analog monitor output	MOD
PRM18, PRM1018	Status display selection	*DMD
PRM19, PRM1019	Parameter block	*BLK
PRM20, PRM1020	Function selection 2	*OP2
PRM21, PRM1021	For manufacturer setting	-
PRM22, PRM1022	Function selection 4	*OP4
PRM23, PRM1023	Serial communication time-out selection	SIC
PRM24, PRM1024	Feed forward gain	FFC
PRM25, PRM1025	Override offset	VCO
PRM26, PRM1026	Torque limit offset	TLO
PRM27, PRM1027	Encoder output pulses	*ENR
PRM28, PRM1028	Internal torque limit 1	TL1
PRM29, PRM1029	Internal torque limit 2	TL2
PRM30, PRM1030	Backlash compensation	*BKC
PRM31, PRM1031	Analog monitor 1 offset	MO1
PRM32, PRM1032	Analog monitor 2 offset	MO2
PRM33, PRM1033	Electromagnetic brake sequence output	MBR
PRM34, PRM1034	Ratio of load inertia moment to servo motor inertia moment	GD2
PRM35, PRM1035	Position control gain 2	PG2
PRM36, PRM1036	Speed control gain 1	VG1
PRM37, PRM1037	Speed control gain 2	VG2
PRM38, PRM1038	Speed integral compensation	VIC
PRM39, PRM1039	Speed differential compensation	VDC
PRM40, PRM1040	JOG operation acceleration/deceleration time constant	JTC
PRM41, PRM1041	Home position return operation acceleration/deceleration time constant	ZTS
PRM42, PRM1042	Home position return position data	*ZPS
PRM43, PRM1043	Moving distance after proximity dog	DCT
PRM44, PRM1044	Stopper type home position return stopper time	ZTM
PRM45, PRM1045	Stopper type home position return torque limit value	ZTT

Virtual device name	Name	Symbol
PRM46, PRM1046	Software limit +	*LMP
PRM47, PRM1047		
PRM48, PRM1048	Software limit -	*LMN
PRM49, PRM1049		
PRM50, PRM1050	Position range output address +	*LPP
PRM51, PRM1051		
PRM52, PRM1052	Position range output address -	*LNP
PRM53, PRM1053		
PRM54, PRM1054	For manufacturer setting	-
PRM55, PRM1055	Function selection 6	*OP6
PRM56, PRM1056	For manufacturer setting	-
PRM57, PRM1057	Function selection 8	*OP8
PRM58, PRM1058	Function selection 9	*OP9
PRM59, PRM1059	Function selection A	*OPA
PRM60, PRM1060	For manufacturer setting	-
PRM61, PRM1061	Machine resonance suppression filter 1	NH1
PRM62, PRM1062	Machine resonance suppression filter 2	NH2
PRM63, PRM1063	Low-pass filter, adaptive vibration suppression control	LPF
PRM64, PRM1064	Ratio of load inertia moment to servo motor inertia moment 2	GD2B
PRM65, PRM1065	Position control gain 2 changing ratio	PG2B
PRM66, PRM1066	Speed control gain 2 changing ratio	VG2B
PRM67, PRM1067	Speed integral compensation changing ratio	VICB
PRM68, PRM1068	Gain changing selection	*CDP
PRM69, PRM1069	Gain switching condition	CDS
PRM70, PRM1070	Gain switching time constant	CDT
PRM71 to PRM73, PRM1071 to PRM1073	For manufacturer setting	-
PRM74, PRM1074	OUT1 output time selection	OUT1
PRM75, PRM1075	OUT2 output time selection	OUT2
PRM76, PRM1076	OUT3 output time selection	OUT3
PRM77, PRM1077	Selected to program input polarity selection 1	SYC1
PRM78 to PRM90, PRM1078 to PRM1090	For manufacturer setting	-

■Status display ([MELSERVO-J2S-*CL])

Virtual device name	Name	Symbol
ST0	Current position	-
ST1	Command position	-
ST2	Command remaining distance	-
ST3	Program Number	-
ST4	Step Number	-
ST5	Cumulative feedback pulses	-
ST6	Servo motor speed	-
ST7	Droop pulses	-
ST8	Override	-
ST9	Torque limit voltage	-
ST10	Regenerative load ratio	-
ST11	Effective load ratio	-
ST12	Peak load ratio	-
ST13	Instantaneous torque	-
ST14	Within one-revolution position	-
ST15	ABS counter	-
ST16	Load inertia moment ratio	-
ST17	Bus voltage	-

■Alarm ([MELSERVO-J2S-*CL])

Virtual device name	Name	Symbol
AL0	Current alarm number	-
AL1	Detailed data of current alarms	-
AL11	Servo status when alarm occurs, current position	-
AL12	Servo status when alarm occurs, command position	-
AL13	Servo status when alarm occurs, command remaining distance	-
AL14	Servo status when alarm occurs, program number	-
AL15	Servo status when alarm occurs, step number	-
AL16	Servo status when alarm occurs, cumulative feedback pulses	-
AL17	Servo status when alarm occurs, servo motor speed	-
AL18	Servo status when alarm occurs, droop pulses	-
AL19	Servo status when alarm occurs, override	-
AL20	Servo status when alarm occurs, torque limit voltage	-
AL21	Servo status when alarm occurs, regenerative load ratio	-
AL22	Servo status when alarm occurs, effective load ratio	-
AL23	Servo status when alarm occurs, peak load ratio	-
AL24	Servo status when alarm occurs, instantaneous torque	-
AL25	Servo status when alarm occurs, within one-revolution position	-
AL26	Servo status when alarm occurs, ABS counter	-
AL27	Servo status when alarm occurs, load inertia moment ratio	-
AL28	Servo status when alarm occurs, Bus voltage	-
AL200	Alarm number from Alarm History most recent alarm	-
AL201	Alarm number from Alarm History first alarm in past	-
AL202	Alarm number from Alarm History second alarm in past	-
AL203	Alarm number from Alarm History third alarm in past	-
AL204	Alarm number from Alarm History fourth alarm in past	-
AL205	Alarm number from Alarm History fifth alarm in past	-
AL210	Alarm occurrence time in alarm history most recent alarm	-
AL211	Alarm occurrence time in alarm history first alarm in past	-
AL212	Alarm occurrence time in alarm history second alarm in past	-
AL213	Alarm occurrence time in alarm history third alarm in past	-
AL214	Alarm occurrence time in alarm history fourth alarm in past	-
AL215	Alarm occurrence time in alarm history fifth alarm in past	-
AL230	Detailed alarm from Alarm History most recent alarm	-
AL231	Detailed alarm from Alarm History first alarm in past	-
AL232	Detailed alarm from Alarm History second alarm in past	-
AL233	Detailed alarm from Alarm History third alarm in past	-
AL234	Detailed alarm from Alarm History fourth alarm in past	-
AL235	Detailed alarm from Alarm History fifth alarm in past	-

■External input signal ([MELSERVO-J2S-*CL])

Virtual device name	Name	Symbol	Data to be read from the servo amplifier
DI0	Input device statuses	-	For the mapping of the bits corresponding to the data to be read, refer to the following. MR-J2S-_CL Instruction Manual
DI1	External input pin statuses	-	
DI2	Statuses of input devices switched on through communication	-	For the mapping of the bits corresponding to the data to be read or written, refer to the following. MR-J2S-_CL Instruction Manual

A

■External output signal ([MELSERVO-J2S-*CL])

Virtual device name	Name	Symbol	Data to be read from the servo amplifier
DO0	Output device statuses	-	For the mapping of the bits corresponding to the data to be read, refer to the following. MR-J2S-_CL Instruction Manual
DO1	External output pin statuses	-	

■Current position latch data ([MELSERVO-J2S-*CL])

Virtual device name	Name	Symbol
LD1	Current position latch data	-

■Value of the general-purpose register (Rx) ([MELSERVO-J2S-*CL])

Use an appropriate device according to the write destination of the servo amplifier.

- RR1 to RR4: Writing data to the RAM of a servo amplifier.
- RR1001 to RR1004: Writing data to the EEPROM of a servo amplifier.

Virtual device name	Name	Symbol
RR1, RR1001	Value of the general-purpose register (R1)	-
RR2, RR1002	Value of the general-purpose register (R2)	-
RR3, RR1003	Value of the general-purpose register (R3)	-
RR4, RR1004	Value of the general-purpose register (R4)	-

■Value of the general-purpose register (Dx) ([MELSERVO-J2S-*CL])

Virtual device name	Name	Symbol
RD1	Value of the general-purpose register (D1)	-
RD2	Value of the general-purpose register (D2)	-
RD3	Value of the general-purpose register (D3)	-
RD4	Value of the general-purpose register (D4)	-

■Input signal for test operation (for test operation) ([MELSERVO-J2S-*CL])

Virtual device name	Name	Symbol
TMI0	Input signal for test operation	-

When using the input signal for test operation (for test operation), note the following.

Precautions	Description
Writing a value to a virtual device using an object	Numerical input cannot be used. Use a word switch for writing.

■Forced output of signal pin (for test operation) ([MELSERVO-J2S-*CL])

Virtual device name	Name	Symbol
TMO0	Forced output of signal pin	-

When using the forced output of signal pin (for test operation), note the following.

Precautions	Description
Writing a value to a virtual device using an object	Numerical input cannot be used. Use a word switch for writing.

■Set data (for test operation) ([MELSERVO-J2S-*CL])

Virtual device name	Name	Symbol
TMD0	Writes the speed (test mode)	-
TMD1	Writes the acceleration/deceleration time constant (test mode)	-
TMD2	Writes the moving distance in pulses (test mode)	-

When using the set data (for test operation), note the following.

Precautions	Description
Writing a value to a virtual device using an object	Numerical input cannot be used. Use a word switch for writing.

Precautions for virtual servo amplifier devices ([MELSERVO-J2S-*CL])

For the precautions for virtual servo amplifier devices, refer to the following.

☞ Page 1555 Precautions for virtual servo amplifier devices ([MELSERVO-J2M-P8A])

A

[MELSERVO-J3-*A]

GT27 GT25 GT23 GT21 GS25 GS21

Item	Reference
Specifications of bit devices	☞ Page 1592 Monitoring-supported bit devices ([MELSERVO-J3-*A])
	☞ Page 1592 Availability of writing/reading data to/from bit devices ([MELSERVO-J3-*A])
Specifications of word devices	☞ Page 1593 Monitoring-supported word devices ([MELSERVO-J3-*A])
	☞ Page 1593 Availability of writing/reading data to/from word devices ([MELSERVO-J3-*A])
Specifications of double-word devices	☞ Page 1594 Monitoring-supported double-word devices ([MELSERVO-J3-*A])
	☞ Page 1594 Availability of writing/reading data to/from double-word devices ([MELSERVO-J3-*A])
Specifications of virtual servo amplifier devices	☞ Page 1595 Virtual servo amplifier devices ([MELSERVO-J3-*A])
	☞ Page 1601 Precautions for virtual servo amplifier devices ([MELSERVO-J3-*A])

Monitoring-supported bit devices ([MELSERVO-J3-*A])

The following table shows monitoring-supported virtual bit devices for servo amplifiers.

To check whether writing/reading data to/from each device is available, refer to the following.

☞ Page 1592 Availability of writing/reading data to/from bit devices ([MELSERVO-J3-*A])

For details on virtual servo amplifier devices, refer to the following.

☞ Page 1595 Virtual servo amplifier devices ([MELSERVO-J3-*A])

○: Available

×: Not available

Device name		Device No. representation	Setting range	Specifications of EG devices*1	
				Assignment to EG devices	Access using a client
SP	Servo amplifier request	Decimal	0 to 6	×	×
OM	Operation mode selection	Decimal	0 to 4	×	×
TMB	Instruction demand (for test operation)	Decimal	1 to 6	×	×

*1 For the devices assigned to EG devices (gateway devices) and the compatible clients, refer to the following.
📖GT Designer3 (GOT2000) Screen Design Manual

Availability of writing/reading data to/from bit devices ([MELSERVO-J3-*A])

The following shows whether writing/reading data to/from bit devices is available by device type.

When the device type is other than the bit type, set the device No. in multiples of 16.

R/W: Both read and write

R/-: Read only

-/W: Write only

-/-: No read/write access

Device name	Device type				
	Bit	Byte (8 bits)	Word (16 bits)	Double-word (32 bits)	Quad-word (64 bits)
SP	-/W	-/-	-/-	-/-	-/-
OM	-/W	-/-	-/-	-/-	-/-
TMB	-/W	-/-	-/-	-/-	-/-

Monitoring-supported word devices ([MELSERVO-J3-*A])

The following table shows monitoring-supported virtual word devices for servo amplifiers.

To check whether writing/reading data to/from each device is available, refer to the following.

☞ Page 1593 Availability of writing/reading data to/from word devices ([MELSERVO-J3-*A])

For details on virtual servo amplifier devices, refer to the following.

☞ Page 1595 Virtual servo amplifier devices ([MELSERVO-J3-*A])

○: Available

×: Not available

Device name		Device No. representation	Setting range	Specifications of EG devices*1	
				Assignment to EG devices	Access using a client
PA	Basic parameter	Decimal	1 to 19 1001 to 1019	○	×
PB	Gain filter parameter	Decimal	1 to 45 1001 to 1045	○	×
PC	Extension setting parameter	Decimal	1 to 50 1001 to 1050	○	×
PD	I/O setting parameter	Decimal	1 to 30 1001 to 1030	○	×
ST	Status display	Decimal	0 to 14	○	×
AL	Alarm (current alarm)	Decimal	0 to 1 11 to 25	○	×
AL	Alarm (alarm history)	Decimal	200 to 205 210 to 215 230 to 235	○	×
DI	External input signal	Decimal	0 to 2	×	×
DO	External output signal	Decimal	0 to 1	×	×

*1 For the devices assigned to EG devices (gateway devices) and the compatible clients, refer to the following.
📖GT Designer3 (GOT2000) Screen Design Manual

A

Availability of writing/reading data to/from word devices ([MELSERVO-J3-*A])

The following shows the availability of writing/reading data to/from word devices by device type.

R/W: Both read and write

R/-: Read only

-/W: Write only

-/-: No read/write access

Device name	Device type			
	Word (16 bits)	Double-word (32 bits)	Quad-word (64 bits)	Bit of word data
PA	R/W	R/W	-/-	-/-
PB	R/W	R/W	-/-	-/-
PC	R/W	R/W	-/-	-/-
PD	R/W	R/W	-/-	-/-
ST	R/-	R/-	-/-	-/-
AL	R/-	R/-	-/-	-/-
DI*1	R/-	R/W	-/-	-/-
DO	R/-	R/-	-/-	-/-

*1 Only reading is available for DI0 to DI1.

Monitoring-supported double-word devices ([MELSERVO-J3-*A])

The following table shows monitoring-supported virtual double-word devices for servo amplifiers.

To check whether writing/reading data to/from each device is available, refer to the following.

☞ Page 1594 Availability of writing/reading data to/from double-word devices ([MELSERVO-J3-*A])

For details on virtual servo amplifier devices, refer to the following.

☞ Page 1595 Virtual servo amplifier devices ([MELSERVO-J3-*A])

○: Available

×: Not available

Device name		Device No. representation	Setting range	Specifications of EG devices*1	
				Assignment to EG devices	Access using a client
TMI	Input signal for test operation (for test operation)	Decimal	0	×	×
TMO	Forced output of signal pin (for test operation)	Decimal	0	×	×
TMD	Set data (for test operation)	Decimal	0 to1, 3	×	×

*1 For the devices assigned to EG devices (gateway devices) and the compatible clients, refer to the following.
📖GT Designer3 (GOT2000) Screen Design Manual

Availability of writing/reading data to/from double-word devices ([MELSERVO-J3-*A])

The following shows the availability of writing/reading data to/from double-word devices by device type.

R/W: Both read and write

R/-: Read only

-/W: Write only

-/-: No read/write access

Device name	Device type			
	Word (16 bits)	Double-word (32 bits)	Quad-word (64 bits)	Bit of double-word data
TMI	-/-	-/W	-/-	-/-
TMO	-/-	-/W	-/-	-/-
TMD	-/-	-/W	-/-	-/-

Virtual servo amplifier devices ([MELSERVO-J3-*A])

The following shows the correspondence between the virtual devices used in the GOT and the servo amplifier data.

Virtual device name	Reference
SP	☞ Page 1595 Servo amplifier request ([MELSERVO-J3-*A])
OM	☞ Page 1595 Operation mode selection ([MELSERVO-J3-*A])
TMB	☞ Page 1596 Instruction demand (for test operation) ([MELSERVO-J3-*A])
PA	☞ Page 1596 Basic parameter ([MELSERVO-J3-*A])
PB	☞ Page 1597 Gain filter parameter ([MELSERVO-J3-*A])
PC	☞ Page 1598 Extension setting parameter ([MELSERVO-J3-*A])
PD	☞ Page 1599 I/O setting parameter ([MELSERVO-J3-*A])
ST	☞ Page 1599 Status display ([MELSERVO-J3-*A])
AL	☞ Page 1600 Alarm ([MELSERVO-J3-*A])
DI	☞ Page 1601 External input signal ([MELSERVO-J3-*A])
DO	☞ Page 1601 External output signal ([MELSERVO-J3-*A])
TMI	☞ Page 1601 Input signal for test operation (for test operation) ([MELSERVO-J3-*A])
TMO	☞ Page 1601 Forced output of signal pin (for test operation) ([MELSERVO-J3-*A])
TMD	☞ Page 1601 Set data (for test operation) ([MELSERVO-J3-*A])

■Servo amplifier request ([MELSERVO-J3-*A])

Virtual device name	Name	Symbol
SP0	Status display data clear	-
SP1	Current alarm clear	-
SP2	Alarm history clear	-
SP3	External input signal prohibited	-
SP4	External output signal prohibited	-
SP5	External input signal resumed	-
SP6	External output signal resumed	-

When using the servo amplifier request, note the following.

Precautions	Description
When setting a device for a bit switch.	Do not select [Alternate] for [Switch Action] of the bit switch.

■Operation mode selection ([MELSERVO-J3-*A])

Virtual device name	Name	Symbol
OM0	Normal mode (not test operation mode)	-
OM1	JOG operation	-
OM2	Positioning operation	-
OM3	Motorless operation	-
OM4	Output signal (DO) forced output	-

When using the operation mode selection, note the following.

Precautions	Description
When setting a device for a bit switch.	Do not select [Alternate] for [Switch Action] of the bit switch.

■Instruction demand (for test operation) ([MELSERVO-J3-*A])

Virtual device name	Name	Symbol
TMB1	Temporary stop command	-
TMB2	Test operation (positioning operation) start command	-
TMB3	Forward rotation direction	-
TMB4	Reverse rotation direction	-
TMB5	Restart for remaining distance	-
TMB6	Remaining distance clear	-

When using the instruction demand (for test operation), note the following.

Precautions	Description
When setting a device for a bit switch.	Do not select [Alternate] for [Switch Action] of the bit switch.

■Basic parameter ([MELSERVO-J3-*A])

Use an appropriate device according to the write destination of the servo amplifier.

- PA1 to PA50: Writing data to the RAM of a servo amplifier.
- PA1001 to PA1050: Writing data to the EEPROM of a servo amplifier.

For the parameters prefixed by an asterisk (*), setting becomes effective when the power is turned off once and back on after setting the parameter data.

Virtual device name	Name	Symbol
PA1, PA1001	Control mode	*STY
PA2, PA1002	Regenerative brake option	*REG
PA3, PA1003	Absolute position detection system	*ABS
PA4, PA1004	Function selection A-1	*AOP1
PA5, PA1005	Number of command input pulses per revolution	*FBP
PA6, PA1006	Electronic gear numerator (command pulse multiplication numerator)	CMX
PA7, PA1007	Electronic gear denominator (command pulse multiplication denominator)	CDV
PA8, PA1008	Auto tuning mode	ATU
PA9, PA1009	Auto tuning response	RSP
PA10, PA1010	In-position range	INP
PA11, PA1011	Forward rotation torque limit	TLP
PA12, PA1012	Reverse rotation torque limit	TLN
PA13, PA1013	Command pulse input form	*PLSS
PA14, PA1014	Rotation direction selection	*POL
PA15, PA1015	Encoder output pulses	*ENR
PA16 to PA18, PA1016 to PA1018	For manufacturer setting	-
PA19, PA1019	Parameter block	*BLK

■Gain filter parameter ([MELSERVO-J3-*A])

Use an appropriate device according to the write destination of the servo amplifier.

- PB1 to PB50: Writing data to the RAM of a servo amplifier.
- PB1001 to PB1050: Writing data to the EEPROM of a servo amplifier.

For the parameters prefixed by an asterisk (*), setting becomes effective when the power is turned off once and back on after setting the parameter data.

Virtual device name	Name	Symbol
PB1, PB1001	Adaptive tuning mode (Adaptive filter II)	FILT
PB2, PB1002	Vibration suppression control tuning mode (advanced vibration suppression control)	VRFT
PB3, PB1003	Position command acceleration/deceleration time constant (position smoothing)	PST
PB4, PB1004	Feed forward gain	FFC
PB5, PB1005	For manufacturer setting	-
PB6, PB1006	Ratio of load inertia moment to servo motor inertia moment	GD2
PB7, PB1007	Model control gain	PG1
PB8, PB1008	Position control gain	PG2
PB9, PB1009	Speed control gain	VG2
PB10, PB1010	Speed integral compensation	VIC
PB11, PB1011	Speed differential compensation	VDC
PB12, PB1012	For manufacturer setting	-
PB13, PB1013	Machine resonance suppression filter 1	NH1
PB14, PB1014	Notch shape selection 1	NHQ1
PB15, PB1015	Machine resonance suppression filter 2	NH2
PB16, PB1016	Notch shape selection 2	NHQ2
PB17, PB1017	For manufacturer setting	-
PB18, PB1018	Low-pass filter setting	LPF
PB19, PB1019	Vibration suppression control vibration frequency setting	VRF1
PB20, PB1020	Vibration suppression control resonance frequency setting	VRF2
PB21 to PB22, PB1021 to PB1022	For manufacturer setting	-
PB23, PB1023	Low-pass filter setting	VFBF
PB24, PB1024	Slight vibration suppression control	*MVS
PB25, PB1025	Function selection B-1	*BOP1
PB26, PB1026	Gain changing selection	*CDP
PB27, PB1027	Gain switching condition	CDL
PB28, PB1028	Gain switching time constant	CDT
PB29, PB1029	Ratio of load inertia moment to servo motor after gain switching	GD2B
PB30, PB1030	Position loop gain after gain switching	PG2B
PB31, PB1031	Speed loop gain after gain switching	VG2B
PB32, PB1032	Speed integral compensation after gain switching	VICB
PB33, PB1033	Suppression control and vibration frequency setting after gain switching	VRF1B
PB34, PB1034	Suppression control and vibration resonance setting after gain switching	VRF2B
PB35 to PB45, PB1035 to PB1045	For manufacturer setting	-

■Extension setting parameter ([MELSERVO-J3-*A])

Use an appropriate device according to the write destination of the servo amplifier.

- PC1 to PC50: Writing data to the RAM of a servo amplifier.
- PC1001 to PC1050: Writing data to the EEPROM of a servo amplifier.

For the parameters prefixed by an asterisk (*), setting becomes effective when the power is turned off once and back on after setting the parameter data.

Virtual device name	Name	Symbol
PC1, PC1001	Acceleration time constant	STA
PC2, PC1002	Deceleration time constant	STB
PC3, PC1003	S-pattern acceleration/deceleration time constant	STC
PC4, PC1004	Torque command time constant	TQC
PC5, PC1005	Internal speed command1/limit1	SC1
PC6, PC1006	Internal speed command2/limit2	SC2
PC7, PC1007	Internal speed command3/limit3	SC3
PC8, PC1008	Internal speed command4/limit4	SC4
PC9, PC1009	Internal speed command5/limit5	SC5
PC10, PC1010	Internal speed command6/limit6	SC6
PC11, PC1011	Internal speed command7/limit7	SC7
PC12, PC1012	Analog speed command maximum speed/limit maximum speed	VCM
PC13, PC1013	Analog torque command maximum output	TLC
PC14, PC1014	Analog monitor 1 output	MOD1
PC15, PC1015	Analog monitor 2 output	MOD2
PC16, PC1016	Electromagnetic brake sequence output	MBR
PC17, PC1017	Zero speed	ZSP
PC18, PC1018	Alarm history clear	*BPS
PC19, PC1019	Encoder output pulse selection	*ENRS
PC20, PC1020	Station number setting	*SNO
PC21, PC1021	Communication function selection	*SOP
PC22, PC1022	Function selection C-1	*COP1
PC23, PC1023	Function selection C-2	*COP2
PC24, PC1024	Function selection C-3	*COP3
PC25, PC1025	For manufacturer setting	-
PC26, PC1026	Function selection C-5	*COP5
PC27 to PC29, PC1027 to PC1029	For manufacturer setting	-
PC30, PC1030	Acceleration time constant 2	STA2
PC31, PC1031	Deceleration time constant 2	STB2
PC32, PC1032	Command input pulse multiplication numerator 2	CMX2
PC33, PC1033	Command input pulse multiplication numerator 3	CMX3
PC34, PC1034	Command input pulse multiplication numerator 4	CMX4
PC35, PC1035	Internal torque limit 2	TL2
PC36, PC1036	Status display selection	*DMD
PC37, PC1037	Analog speed command offset/limit offset	VCO
PC38, PC1038	Analog torque command offset/limit offset	TPO
PC39, PC1039	Analog monitor 1 offset	MO1
PC40, PC1040	Analog monitor 2 offset	MO2
PC41 to PC50, PC1041 to PC1050	For manufacturer setting	-

■I/O setting parameter ([MELSERVO-J3-*A])

Use an appropriate device according to the write destination of the servo amplifier.

- PD1 to PD50: Writing data to the RAM of a servo amplifier.
- PD1001 to PD1050: Writing data to the EEPROM of a servo amplifier.

For the parameters prefixed by an asterisk (*), setting becomes effective when the power is turned off once and back on after setting the parameter data.

Virtual device name	Name	Symbol
PD1, PD1001	Input signal automatic ON selection 1	*DIA1
PD2, PD1002	For manufacturer setting	-
PD3, PD1003	Input device selection 1 (CN1-15)	*DI1
PD4, PD1004	Input device selection 2 (CN1-16)	*DI2
PD5, PD1005	Input device selection 3 (CN1-17)	*DI3
PD6, PD1006	Input device selection 4 (CN1-18)	*DI4
PD7, PD1007	Input device selection 5 (CN1-19)	*DI5
PD8, PD1008	Input device selection 6 (CN1-41)	*DI6
PD9, PD1009	For manufacturer setting	-
PD10, PD1010	Input device selection 8 (CN1-43)	*DI8
PD11, PD1011	Input device selection 9 (CN1-44)	*DI9
PD12, PD1012	Input device selection 10 (CN1-45)	*DI10
PD13, PD1013	Output device selection 1 (CN1-22)	*DO1
PD14, PD1014	Output device selection 2 (CN1-23)	*DO2
PD15, PD1015	Output device selection 3 (CN1-24)	*DO3
PD16, PD1016	Output device selection 4 (CN1-25)	*DO4
PD17, PD1017	For manufacturer setting	-
PD18, PD1018	Output device selection 6 (CN1-49)	*DO6
PD19, PD1019	Input filter setting	*DIF
PD20, PD1020	Function selection D-1	*DOP1
PD21, PD1021	For manufacturer setting	-
PD22, PD1022	Function selection D-3	*DOP3
PD23, PD1023	For manufacturer setting	-
PD24, PD1024	Function selection D-5	*DOP5
PD25 to PD30, PD1025 to PD1030	For manufacturer setting	-

■Status display ([MELSERVO-J3-*A])

Virtual device name	Name	Symbol
ST0	Cumulative feedback pulses	-
ST1	Servo motor speed	-
ST2	Droop pulses	-
ST3	Cumulative command pulses	-
ST4	Command pulse frequency	-
ST5	Analog speed command voltage/limit voltage	-
ST6	Analog torque command voltage/limit voltage	-
ST7	Regenerative load ratio	-
ST8	Effective load ratio	-
ST9	Peak load ratio	-
ST10	Instantaneous torque	-
ST11	Within one-revolution position	-
ST12	ABS counter	-
ST13	Load inertia moment ratio	-
ST14	Bus voltage	-

■Alarm ([MELSERVO-J3-*A])

Virtual device name	Name	Symbol
AL0	Current alarm number	-
AL1	Detailed data of current alarms	-
AL11	Servo status when alarm occurs, cumulative feedback pulses	-
AL12	Servo status when alarm occurs, servo motor speed	-
AL13	Servo status when alarm occurs, droop pulses	-
AL14	Servo status when alarm occurs, cumulative command pulses	-
AL15	Servo status when alarm occurs, command pulse frequency	-
AL16	Servo status when alarm occurs, analog speed command voltage/limit voltage	-
AL17	Servo status when alarm occurs, analog torque command voltage/limit voltage	-
AL18	Servo status when alarm occurs, regenerative load ratio	-
AL19	Servo status when alarm occurs, effective load ratio	-
AL20	Servo status when alarm occurs, peak load ratio	-
AL21	Servo status when alarm occurs, Instantaneous torque	-
AL22	Servo status when alarm occurs, within one-revolution position	-
AL23	Servo status when alarm occurs, ABS counter	-
AL24	Servo status when alarm occurs, load inertia moment ratio	-
AL25	Servo status when alarm occurs, bus voltage	-
AL200	Alarm number from Alarm History most recent alarm	-
AL201	Alarm number from Alarm History first alarm in past	-
AL202	Alarm number from Alarm History second alarm in past	-
AL203	Alarm number from Alarm History third alarm in past	-
AL204	Alarm number from Alarm History fourth alarm in past	-
AL205	Alarm number from Alarm History fifth alarm in past	-
AL210	Alarm occurrence time in alarm history most recent alarm	-
AL211	Alarm occurrence time in alarm history first alarm in past	-
AL212	Alarm occurrence time in alarm history second alarm in past	-
AL213	Alarm occurrence time in alarm history third alarm in past	-
AL214	Alarm occurrence time in alarm history fourth alarm in past	-
AL215	Alarm occurrence time in alarm history fifth alarm in past	-
AL230	Detailed alarm from Alarm History most recent alarm	-
AL231	Detailed alarm from Alarm History first alarm in past	-
AL232	Detailed alarm from Alarm History second alarm in past	-
AL233	Detailed alarm from Alarm History third alarm in past	-
AL234	Detailed alarm from Alarm History fourth alarm in past	-
AL235	Detailed alarm from Alarm History fifth alarm in past	-

■External input signal ([MELSERVO-J3-*A])

Virtual device name	Name	Symbol	Data to be read from the servo amplifier
DI0	Input device statuses	-	For the mapping of the bits corresponding to the data to be read, refer to the following. 📖MR-J3-_A Instruction Manual
DI1	External input pin statuses	-	
DI2	Statuses of input devices switched on through communication	-	

■External output signal ([MELSERVO-J3-*A])

Virtual device name	Name	Symbol	Data to be read from the servo amplifier
DO0	Output device statuses	-	For the mapping of the bits corresponding to the data to be read, refer to the following. 📖MR-J3-_A Instruction Manual
DO1	External output pin statuses	-	

■Input signal for test operation (for test operation) ([MELSERVO-J3-*A])

Virtual device name	Name	Symbol
TMI0	Input signal for test operation	-

When using the input signal for test operation (for test operation), note the following.

Precautions	Description
Writing a value to a virtual device using an object	Numerical input cannot be used. Use a word switch for writing.

■Forced output of signal pin (for test operation) ([MELSERVO-J3-*A])

Virtual device name	Name	Symbol
TMO0	Forced output of signal pin	-

When using the forced output of signal pin (for test operation), note the following.

Precautions	Description
Writing a value to a virtual device using an object	Numerical input cannot be used. Use a word switch for writing.

■Set data (for test operation) ([MELSERVO-J3-*A])

Virtual device name	Name	Symbol
TMD0	Writes the speed (test mode)	-
TMD1	Writes the acceleration/deceleration time constant (test mode)	-
TMD2	For manufacturer setting	-
TMD3	Writes the moving distance (test mode)	-

When using the set data (for test operation), note the following.

Precautions	Description
Writing a value to a virtual device using an object	Numerical input cannot be used. Use a word switch for writing.

Precautions for virtual servo amplifier devices ([MELSERVO-J3-*A])

For the precautions for virtual servo amplifier devices, refer to the following.

☞ Page 1555 Precautions for virtual servo amplifier devices ([MELSERVO-J2M-P8A])

[MELSERVO-J3-*T]

GT27 GT25 GT23 GT21 GS25 GS21

Item	Reference
Specifications of bit devices	☞ Page 1602 Monitoring-supported bit devices ([MELSERVO-J3-*T])
	☞ Page 1602 Availability of writing/reading data to/from bit devices ([MELSERVO-J3-*T])
Specifications of word devices	☞ Page 1603 Monitoring-supported word devices ([MELSERVO-J3-*T])
	☞ Page 1604 Availability of writing/reading data to/from word devices ([MELSERVO-J3-*T])
Specifications of double-word devices	☞ Page 1604 Monitoring-supported double-word devices ([MELSERVO-J3-*T])
	☞ Page 1605 Availability of writing/reading data to/from double-word devices ([MELSERVO-J3-*T])
Specifications of virtual servo amplifier devices	☞ Page 1605 Virtual servo amplifier devices ([MELSERVO-J3-*T])
	☞ Page 1614 Precautions for virtual servo amplifier devices ([MELSERVO-J3-*T])

Monitoring-supported bit devices ([MELSERVO-J3-*T])

The following table shows monitoring-supported virtual bit devices for servo amplifiers.

To check whether writing/reading data to/from each device is available, refer to the following.

☞ Page 1602 Availability of writing/reading data to/from bit devices ([MELSERVO-J3-*T])

For details on virtual servo amplifier devices, refer to the following.

☞ Page 1605 Virtual servo amplifier devices ([MELSERVO-J3-*T])

○: Available

×: Not available

Device name		Device No. representation	Setting range	Specifications of EG devices*1	
				Assignment to EG devices	Access using a client
SP	Servo amplifier request	Decimal	0 to 6	×	×
OM	Operation mode selection	Decimal	0 to 5	×	×
TMB	Instruction demand (for test operation)	Decimal	1 to 6	×	×

*1 For the devices assigned to EG devices (gateway devices) and the compatible clients, refer to the following.
📖GT Designer3 (GOT2000) Screen Design Manual

Availability of writing/reading data to/from bit devices ([MELSERVO-J3-*T])

The following shows whether writing/reading data to/from bit devices is available by device type.

When the device type is other than the bit type, set the device No. in multiples of 16.

R/W: Both read and write

R/-: Read only

-/W: Write only

-/-: No read/write access

Device name	Device type				
	Bit	Byte (8 bits)	Word (16 bits)	Double-word (32 bits)	Quad-word (64 bits)
SP	-/W	-/-	-/-	-/-	-/-
OM	-/W	-/-	-/-	-/-	-/-
TMB	-/W	-/-	-/-	-/-	-/-

Monitoring-supported word devices ([MELSERVO-J3-*T])

The following table shows monitoring-supported virtual word devices for servo amplifiers.

To check whether writing/reading data to/from each device is available, refer to the following.

☞ Page 1604 Availability of writing/reading data to/from word devices ([MELSERVO-J3-*T])

For details on virtual servo amplifier devices, refer to the following.

☞ Page 1605 Virtual servo amplifier devices ([MELSERVO-J3-*T])

○: Available

×: Not available

Device name		Device No. representation	Setting range	Specifications of EG devices*1	
				Assignment to EG devices	Access using a client
PA	Basic parameter	Decimal	1 to 19 1001 to 1019	○	×
PB	Gain filter parameter	Decimal	1 to 45 1001 to 1045	○	×
PC	Extension setting parameter	Decimal	1 to 50 1001 to 1050	○	×
PD	I/O setting parameter	Decimal	1 to 30 1001 to 1030	○	×
PO	Option unit parameter (PO)*1	Decimal	1 to 35 1001 to 1035	○	×
ST	Status display	Decimal	0 to 17	○	×
AL	Alarm (current alarm)	Decimal	0 to 1 11 to 28	○	×
AL	Alarm (alarm history)	Decimal	200 to 205 210 to 215 230 to 235	○	×
POS	Point table (position)	Decimal	1 to 255 1001 to 1255	○	×
SPD	Point table (speed)	Decimal	1 to 255 1001 to 1255	○	×
ACT	Point table (acceleration time constant)	Decimal	1 to 255 1001 to 1255	○	×
DCT	Point table (deceleration time constant)	Decimal	1 to 255 1001 to 1255	○	×
DWL	Point table (dwell)	Decimal	1 to 255 1001 to 1255	○	×
AUX	Point table (auxiliary function)	Decimal	1 to 255 1001 to 1255	○	×
MCD*2	Point table (M code)	Decimal	1 to 255 1001 to 1255	○	×
DI	External input signal	Decimal	0 to 7	×	×
DO	External output signal	Decimal	0 to 4	×	×

*1 For the devices assigned to EG devices (gateway devices) and the compatible clients, refer to the following.
📖GT Designer3 (GOT2000) Screen Design Manual

*2 MCD cannot be used as a real number.

A

Availability of writing/reading data to/from word devices ([MELSERVO-J3-*T])

The following shows the availability of writing/reading data to/from word devices by device type.

R/W: Both read and write

R/-: Read only

-/W: Write only

-/-: No read/write access

Device name	Device type			
	Word (16 bits)	Double-word (32 bits)	Quad-word (64 bits)	Bit of word data
PA	R/W	R/W	-/-	-/-
PB	R/W	R/W	-/-	-/-
PC	R/W	R/W	-/-	-/-
PD	R/W	R/W	-/-	-/-
PO	R/W	R/W	-/-	-/-
ST	R/-	R/-	-/-	-/-
AL	R/-	R/-	-/-	-/-
POS	R/W	R/W	-/-	-/-
SPD	R/W	R/W	-/-	-/-
ACT	R/W	R/W	-/-	-/-
DCT	R/W	R/W	-/-	-/-
DWL	R/W	R/W	-/-	-/-
AUX	R/W	R/W	-/-	-/-
MCD	R/W	R/W	-/-	-/-
DI*1	R/-	R/W	-/-	-/-
DO	R/-	R/-	-/-	-/-

*1 For DI0 to DI4, the GOT can only read data from devices.

Monitoring-supported double-word devices ([MELSERVO-J3-*T])

The following table shows monitoring-supported virtual double-word devices for servo amplifiers.

To check whether writing/reading data to/from each device is available, refer to the following.

☞ Page 1605 Availability of writing/reading data to/from double-word devices ([MELSERVO-J3-*T])

For details on virtual servo amplifier devices, refer to the following.

☞ Page 1605 Virtual servo amplifier devices ([MELSERVO-J3-*T])

○: Available

×: Not available

Device name		Device No. representation	Setting range	Specifications of EG devices*1	
				Assignment to EG devices	Access using a client
TMI	Input signal for test operation (for test operation)	Decimal	0 to 2	×	×
TMO	Forced output of signal pin (for test operation)	Decimal	0 to 1	×	×
TMD	Set data (for test operation)	Decimal	0 to1, 3	×	×

*1 For the devices assigned to EG devices (gateway devices) and the compatible clients, refer to the following.
📖GT Designer3 (GOT2000) Screen Design Manual

Availability of writing/reading data to/from double-word devices ([MELSERVO-J3-*T])

The following shows the availability of writing/reading data to/from double-word devices by device type.

R/W: Both read and write

R/-: Read only

-/W: Write only

-/-: No read/write access

Device name	Device type			
	Word (16 bits)	Double-word (32 bits)	Quad-word (64 bits)	Bit of double-word data
TMI	-/-	-/W	-/-	-/-
TMO	-/-	-/W	-/-	-/-
TMD	-/-	-/W	-/-	-/-

Virtual servo amplifier devices ([MELSERVO-J3-*T])

The following shows the correspondence between the virtual devices used in the GOT and the servo amplifier data.

Virtual device name	Reference
SP	☞ Page 1606 Servo amplifier request ([MELSERVO-J3-*T])
OM	☞ Page 1606 Operation mode selection ([MELSERVO-J3-*T])
TMB	☞ Page 1606 Instruction demand (for test operation) ([MELSERVO-J3-*T])
PA	☞ Page 1607 Basic parameter ([MELSERVO-J3-*T])
PB	☞ Page 1608 Gain filter parameter ([MELSERVO-J3-*T])
PC	☞ Page 1609 Extension setting parameter ([MELSERVO-J3-*T])
PD	☞ Page 1610 I/O setting parameter ([MELSERVO-J3-*T])
PO	☞ Page 1611 Option unit parameter ([MELSERVO-J3-*T])
ST	☞ Page 1611 Status display ([MELSERVO-J3-*T])
AL	☞ Page 1612 Alarm ([MELSERVO-J3-*T])
POS	☞ Page 1613 Point table (position) ([MELSERVO-J3-*T])
SPD	☞ Page 1613 Point table (speed) ([MELSERVO-J3-*T])
ACT	☞ Page 1613 Point table (acceleration time constant) ([MELSERVO-J3-*T])
DCT	☞ Page 1613 Point table (deceleration time constant) ([MELSERVO-J3-*T])
DWL	☞ Page 1613 Point table (dwell) ([MELSERVO-J3-*T])
AUX	☞ Page 1613 Point table (auxiliary function) ([MELSERVO-J3-*T])
MCD	☞ Page 1613 Point table (M code) ([MELSERVO-J3-*T])
DI	☞ Page 1614 External input signal ([MELSERVO-J3-*T])
DO	☞ Page 1614 External output signal ([MELSERVO-J3-*T])
TMI	☞ Page 1614 Input signal for test operation (for test operation) ([MELSERVO-J3-*T])
TMO	☞ Page 1614 Forced output of signal pin (for test operation) ([MELSERVO-J3-*T])
TMD	☞ Page 1614 Set data (for test operation) ([MELSERVO-J3-*T])

■Servo amplifier request ([MELSERVO-J3-*T])

Virtual device name	Name	Symbol
SP0	Status display data clear	-
SP1	Current alarm clear	-
SP2	Alarm history clear	-
SP3	External input signal prohibited	-
SP4	External output signal prohibited	-
SP5	External input signal resumed	-
SP6	External output signal resumed	-

When using the servo amplifier request, note the following.

Precautions	Description
When setting a device for a bit switch.	Do not select [Alternate] for [Switch Action] of the bit switch.

■Operation mode selection ([MELSERVO-J3-*T])

Virtual device name	Name	Symbol
OM0	Normal mode (not test operation mode)	-
OM1	JOG operation	-
OM2	Positioning operation	-
OM3	Motorless operation	-
OM4	Output signal (DO) forced output	-
OM5	Single-step feed	-

When using the operation mode selection, note the following.

Precautions	Description
When setting a device for a bit switch.	Do not select [Alternate] for [Switch Action] of the bit switch.

■Instruction demand (for test operation) ([MELSERVO-J3-*T])

Virtual device name	Name	Symbol
TMB1	Temporary stop command	-
TMB2	Test operation (positioning operation) start command	-
TMB3	Forward rotation direction	-
TMB4	Reverse rotation direction	-
TMB5	Restart for remaining distance	-
TMB6	Remaining distance clear	-

When using the instruction demand (for test operation), note the following.

Precautions	Description
When setting a device for a bit switch.	Do not select [Alternate] for [Switch Action] of the bit switch.

■Basic parameter ([MELSERVO-J3-*T])

Use an appropriate device according to the write destination of the servo amplifier.

- PA1 to PA19: Writing data to the RAM of a servo amplifier.
- PA1001 to PA1019: Writing data to the EEPROM of a servo amplifier.

For the parameters prefixed by an asterisk (*), setting becomes effective when the power is turned off once and back on after setting the parameter data.

Virtual device name	Name	Symbol
PA1, PA1001	Control mode	*STY
PA2, PA1002	Regenerative brake option	*REG
PA3, PA1003	Absolute position detection system	*ABS
PA4, PA1004	Function selection A-1	*AOP1
PA5, PA1005	Feeding function selection	*FTY
PA6, PA1006	Electronic gear numerator	*CMX
PA7, PA1007	Electronic gear denominator	*CDV
PA8, PA1008	Auto tuning mode	ATU
PA9, PA1009	Auto tuning response	RSP
PA10, PA1010	In-position range	INP
PA11, PA1011	Forward rotation torque limit	TLP
PA12, PA1012	Reverse rotation torque limit	TLN
PA13, PA1013	For manufacturer setting	-
PA14, PA1014	Rotation direction selection	*POL
PA15, PA1015	Encoder output pulses	*ENR
PA16 to PA18, PA1016 to PA1018	For manufacturer setting	-
PA19, PA1019	Parameter block	*BLK

■Gain filter parameter ([MELSERVO-J3-*T])

Use an appropriate device according to the write destination of the servo amplifier.

- PB1 to PB45: Writing data to the RAM of a servo amplifier.
- PB1001 to PB1045: Writing data to the EEPROM of a servo amplifier.

For the parameters prefixed by an asterisk (*), setting becomes effective when the power is turned off once and back on after setting the parameter data.

Virtual device name	Name	Symbol
PB1, PB1001	Adaptive tuning mode (Adaptive filter II)	FILT
PB2, PB1002	Vibration suppression control tuning mode (advanced vibration suppression control)	VRFT
PB3, PB1003	For manufacturer setting	-
PB4, PB1004	Feed forward gain	FFC
PB5, PB1005	For manufacturer setting	-
PB6, PB1006	Ratio of load inertia moment to servo motor inertia moment	GD2
PB7, PB1007	Model control gain	PG1
PB8, PB1008	Position control gain	PG2
PB9, PB1009	Speed control gain	VG2
PB10, PB1010	Speed integral compensation	VIC
PB11, PB1011	Speed differential compensation	VDC
PB12, PB1012	For manufacturer setting	-
PB13, PB1013	Machine resonance suppression filter 1	NH1
PB14, PB1014	Notch shape selection 1	NHQ1
PB15, PB1015	Machine resonance suppression filter 2	NH2
PB16, PB1016	Notch shape selection 2	NHQ2
PB17, PB1017	For manufacturer setting	-
PB18, PB1018	Low-pass filter setting	LPF
PB19, PB1019	Vibration suppression control vibration frequency setting	VRF1
PB20, PB1020	Vibration suppression control resonance frequency setting	VRF2
PB21 to PB22, PB1021 to PB1022	For manufacturer setting	-
PB23, PB1023	Low-pass filter setting	VFBF
PB24, PB1024	Slight vibration suppression control	*MVS
PB25, PB1025	For manufacturer setting	-
PB26, PB1026	Gain changing selection	*CDP
PB27, PB1027	Gain switching condition	CDL
PB28, PB1028	Gain switching time constant	CDT
PB29, PB1029	Ratio of load inertia moment to servo motor after gain switching	GD2B
PB30, PB1030	Position loop gain after gain switching	PG2B
PB31, PB1031	Speed loop gain after gain switching	VG2B
PB32, PB1032	Speed integral compensation after gain switching	VICB
PB33, PB1033	Suppression control and vibration frequency setting after gain switching	VRF1B
PB34, PB1034	Suppression control and vibration resonance setting after gain switching	VRF2B
PB35 to PB45, PB1035 to PB1045	For manufacturer setting	-

■Extension setting parameter ([MELSERVO-J3-*T])

Use an appropriate device according to the write destination of the servo amplifier.

- PC1 to PC50: Writing data to the RAM of a servo amplifier.
- PC1001 to PC1050: Writing data to the EEPROM of a servo amplifier.

For the parameters prefixed by an asterisk (*), setting becomes effective when the power is turned off once and back on after setting the parameter data.

Virtual device name	Name	Symbol
PC1, PC1001	For manufacturer setting	-
PC2, PC1002	Home position return type	*ZTY
PC3, PC1003	Direction of home position return	*ZDIR
PC4, PC1004	Home position return speed	ZRF
PC5, PC1005	Creep speed	CRF
PC6, PC1006	Home position shift distance	ZST
PC7, PC1007	Home position return position data	*ZPS
PC8, PC1008	Moving distance after proximity dog	DCT
PC9, PC1009	Stopper type home position return stopper time	ZTM
PC10, PC1010	Stopper type home position return torque limit value	ZTT
PC11, PC1011	Rough match output range	CRP
PC12, PC1012	Jog speed	JOG
PC13, PC1013	S-pattern acceleration/deceleration time constant	*STC
PC14, PC1014	Backlash compensation	*BKC
PC15, PC1015	For manufacturer setting	-
PC16, PC1016	Electromagnetic brake sequence output	MBR
PC17, PC1017	Zero speed	ZSP
PC18, PC1018	Alarm history clear	*BPS
PC19, PC1019	Encoder output pulse selection	*ENRS
PC20, PC1020	Station number setting	*SNO
PC21, PC1021	RS-422 communication function selection	*SOP
PC22, PC1022	Function selection C-1	*COP1
PC23, PC1023	For manufacturer setting	-
PC24, PC1024	Function selection C-3	*COP3
PC25, PC1025	For manufacturer setting	-
PC26, PC1026	Function selection C-5	*COP5
PC27, PC1027	For manufacturer setting	-
PC28, PC1028	Function selection C-7	*COP7
PC29 to PC30, PC1029 to PC1030	For manufacturer setting	-
PC31, PC1031	Software limit + Low	LMPL
PC32, PC1032	Software limit + High	LMPH
PC33, PC1033	Software limit - Low	LMNL
PC34, PC1034	Software limit - High	LMNH
PC35, PC1035	Internal torque limit 2	TL2
PC36, PC1036	Status display selection	*DMD
PC37, PC1037	Position range output address + Low	*LPPL
PC38, PC1038	Position range output address + High	*LPPH
PC39, PC1039	Position range output address - Low	*LNPL
PC40, PC1040	Position range output address - High	*LNPH
PC41 to PC50, PC1041 to PC1050	For manufacturer setting	-

■I/O setting parameter ([MELSERVO-J3-*T])

Use an appropriate device according to the write destination of the servo amplifier.

- PD1 to PD30: Writing data to the RAM of a servo amplifier.
- PD1001 to PD1030: Writing data to the EEPROM of a servo amplifier.

For the parameters prefixed by an asterisk (*), setting becomes effective when the power is turned off once and back on after setting the parameter data.

Virtual device name	Name	Symbol
PD1, PD1001	Input signal automatic ON selection 1	*DIA1
PD2, PD1002	For manufacturer setting	-
PD3, PD1003	Input signal automatic ON selection 3	*DIA3
PD4, PD1004	Input signal automatic ON selection 4	*DIA4
PD5, PD1005	For manufacturer setting	-
PD6, PD1006	Input device selection 2 (CN6-2)	*DI2
PD7, PD1007	Input device selection 3 (CN6-3)	*DI3
PD8, PD1008	Input device selection 4 (CN6-4)	*DI4
PD9, PD1009	Output signal device selection 1 (CN6-14)	*DO1
PD10, PD1010	Output signal device selection 2 (CN6-15)	*DO2
PD11, PD1011	Output signal device selection 3 (CN6-16)	*DD3
PD12 to PD15, PD1012 to PD1015	For manufacturer setting	-
PD16, PD1016	Input polarity selection	*DIAB
PD17 to PD18, PD1017 to PD1018	For manufacturer setting	-
PD19, PD1019	Input filter setting	*DIF
PD20, PD1020	Function selection D-1	*DOP1
PD21, PD1021	For manufacturer setting	-
PD22, PD1022	Function selection D-3	*DOP3
PD23, PD1023	For manufacturer setting	-
PD24, PD1024	Function selection D-5	*DOP5
PD25 to PD30, PD1025 to PD1030	For manufacturer setting	-

■Option unit parameter ([MELSERVO-J3-*T])

Use an appropriate device according to the write destination of the servo amplifier.

- PO1 to PO35: Writing data to the RAM of a servo amplifier.
- PO1001 to PO1035: Writing data to the EEPROM of a servo amplifier.

Virtual device name	Name	Symbol
PO1, PO1001	For manufacturer setting	-
PO2, PO1002	MR-J3-D01 Input signal device selection 1 (CN10-21, 26)	*ODI1
PO3, PO1003	MR-J3-D01 Input signal device selection 2 (CN10-27, 28)	*ODI2
PO4, PO1004	MR-J3-D01 Input signal device selection 3 (CN10-29, 30)	*ODI3
PO5, PO1005	MR-J3-D01 Input signal device selection 4 (CN10-31, 32)	*ODI4
PO6, PO1006	MR-J3-D01 Input signal device selection 5 (CN10-33, 34)	*ODI5
PO7, PO1007	MR-J3-D01 Input signal device selection 6 (CN10-35, 36)	*ODI6
PO8, PO1008	MR-J3-D01 Output signal device selection 1 (CN10-46, 47)	*ODO1
PO9, PO1009	MR-J3-D01 Output signal device selection 2 (CN10-48, 49)	*ODO2
PO10, PO1010	Function selection 0-1	*OOP1
PO11, PO1011	For manufacturer setting	-
PO12, PO1012	Function selection 0-3	*OOP3
PO13, PO1013	MR-J3-D01 Analog monitor 1 output	MOD1
PO14, PO1014	MR-J3-D01 Analog monitor 2 output	MOD2
PO15, PO1015	MR-J3-D01 Analog monitor 1 offset	MO1
PO16, PO1016	MR-J3-D01 Analog monitor 2 offset	MO2
PO17 to 20, PO1017 to PO1020	For manufacturer setting	-
PO21, PO1021	MR-J3-D01 Override offset	VCO
PO22, PO1022	MR-J3-D01 Analog torque limitation offset	TLO
PO23 to PO35, PO1023 to PO1035	For manufacturer setting	-

■Status display ([MELSERVO-J3-*T])

Virtual device name	Name	Symbol
ST0	Current position	-
ST1	Command position	-
ST2	Command remaining distance	-
ST3	Point table No.	-
ST4	Cumulative feedback pulses	-
ST5	Servo motor speed	-
ST6	Droop pulses	-
ST7	Override voltage	-
ST8	Override	-
ST9	Analog torque command voltage/limit voltage	-
ST10	Regenerative load ratio	-
ST11	Effective load ratio	-
ST12	Peak load ratio	-
ST13	Instantaneous torque	-
ST14	Within one-revolution position	-
ST15	ABS counter	-
ST16	Load inertia moment ratio	-
ST17	Bus voltage	-

■Alarm ([MELSERVO-J3-*T])

Virtual device name	Name	Symbol
AL0	Current alarm number	-
AL1	Detailed data of current alarms	-
AL11	Servo status when alarm occurs, current position	-
AL12	Servo status when alarm occurs, command position	-
AL13	Servo status when alarm occurs, command remaining distance	-
AL14	Servo status when alarm occurs, point table No.	-
AL15	Servo status when alarm occurs, cumulative feedback pulses	-
AL16	Servo status when alarm occurs, servo motor speed	-
AL17	Servo status when alarm occurs, droop pulses	-
AL18	Servo status when alarm occurs, override voltage	-
AL19	Servo status when alarm occurs, override	-
AL20	Servo status when alarm occurs, analog torque limit voltage	-
AL21	Servo status when alarm occurs, regenerative load ratio	-
AL22	Servo status when alarm occurs, effective load ratio	-
AL23	Servo status when alarm occurs, peak load ratio	-
AL24	Servo status when alarm occurs, instantaneous torque	-
AL25	Servo status when alarm occurs, within one-revolution position	-
AL26	Servo status when alarm occurs, ABS counter	-
AL27	Servo status when alarm occurs, load inertia moment ratio	-
AL28	Servo status when alarm occurs, Bus voltage	-
AL200	Alarm number from Alarm History most recent alarm	-
AL201	Alarm number from Alarm History first alarm in past	-
AL202	Alarm number from Alarm History second alarm in past	-
AL203	Alarm number from Alarm History third alarm in past	-
AL204	Alarm number from Alarm History fourth alarm in past	-
AL205	Alarm number from Alarm History fifth alarm in past	-
AL210	Alarm occurrence time in alarm history most recent alarm	-
AL211	Alarm occurrence time in alarm history first alarm in past	-
AL212	Alarm occurrence time in alarm history second alarm in past	-
AL213	Alarm occurrence time in alarm history third alarm in past	-
AL214	Alarm occurrence time in alarm history fourth alarm in past	-
AL215	Alarm occurrence time in alarm history fifth alarm in past	-
AL230	Detailed alarm from Alarm History most recent alarm	-
AL231	Detailed alarm from Alarm History first alarm in past	-
AL232	Detailed alarm from Alarm History second alarm in past	-
AL233	Detailed alarm from Alarm History third alarm in past	-
AL234	Detailed alarm from Alarm History fourth alarm in past	-
AL235	Detailed alarm from Alarm History fifth alarm in past	-

■Point table (position) ([MELSERVO-J3-*T])

Use an appropriate device according to the write destination of the servo amplifier.

- POS1 to POS255: Writing data to the RAM of a servo amplifier.
- POS1001 to POS1255: Writing data to the EEPROM of a servo amplifier.

Virtual device name	Name	Symbol
POS1 to POS255, POS1001 to POS1255	Point table/position data No. 1 to No. 255	-

■Point table (speed) ([MELSERVO-J3-*T])

Use an appropriate device according to the write destination of the servo amplifier.

- SPD1 to SPD255: Writing data to the RAM of a servo amplifier.
- SPD1001 to SPD1255: Writing data to the EEPROM of a servo amplifier.

Virtual device name	Name	Symbol
SPD1 to SPD255, SPD1001 to SPD1255	Point table/speed data No. 1 to No. 255	-

■Point table (acceleration time constant) ([MELSERVO-J3-*T])

Use an appropriate device according to the write destination of the servo amplifier.

- ACT1 to ACT255: Writing data to the RAM of a servo amplifier.
- ACT1001 to ACT1255: Writing data to the EEPROM of a servo amplifier.

Virtual device name	Name	Symbol
ACT1 to ACT255, ACT1001 to ACT1255	Point table/acceleration time constant No. 1 to No. 255	-

■Point table (deceleration time constant) ([MELSERVO-J3-*T])

Use an appropriate device according to the write destination of the servo amplifier.

- DCT1 to DCT255: Writing data to the RAM of a servo amplifier.
- DCT1001 to DCT1255: Writing data to the EEPROM of a servo amplifier.

Virtual device name	Name	Symbol
DCT1 to DCT255, DCT1001 to DCT1255	Point table/deceleration time constant No. 1 to No. 255	-

■Point table (dwell) ([MELSERVO-J3-*T])

Use an appropriate device according to the write destination of the servo amplifier.

- DWL1 to DWL255: Writing data to the RAM of a servo amplifier.
- DWL1001 to DWL1255: Writing data to the EEPROM of a servo amplifier.

Virtual device name	Name	Symbol
DWL1 to DWL255, DWL1001 to DWL1255	Point table/dwell No. 1 to No. 255	-

■Point table (auxiliary function) ([MELSERVO-J3-*T])

Use an appropriate device according to the write destination of the servo amplifier.

- AUX1 to AUX255: Writing data to the RAM of a servo amplifier.
- AUX1001 to AUX1255: Writing data to the EEPROM of a servo amplifier.

Virtual device name	Name	Symbol
AUX1 to AUX255, AUX1001 to AUX1255	Point table/auxiliary function No. 1 to No. 255	-

■Point table (M code) ([MELSERVO-J3-*T])

Use an appropriate device according to the write destination of the servo amplifier.

- MCD1 to MCD255: Writing data to the RAM of a servo amplifier.
- MCD1001 to MCD1255: Writing data to the EEPROM of a servo amplifier.

Virtual device name	Name	Symbol
MCD1 to MCD255, MCD1001 to MCD1255	Point table/M code No.1 to No.255	-

■External input signal ([MELSERVO-J3-*T])

Virtual device name	Name	Symbol	Data to be read from the servo amplifier
DI0	Input device statuses	-	For the mapping of the bits corresponding to the data to be read, refer to the following. 📖MR-J3-_T Instruction Manual
DI1	Input device statuses	-	
DI3	External input pin statuses	-	
DI5	Statuses of input devices switched on through communication	-	For the mapping of the bits corresponding to the data to be read or written, refer to the following. 📖MR-J3-_T Instruction Manual
DI6	Statuses of input devices switched on through communication	-	

■External output signal ([MELSERVO-J3-*T])

Virtual device name	Name	Symbol	Data to be read from the servo amplifier
DO0	Output device statuses	-	For the mapping of the bits corresponding to the data to be read, refer to the following. 📖MR-J3-_T Instruction Manual
DO1	Output device statuses	-	
DO3	External output pin statuses	-	

■Input signal for test operation (for test operation) ([MELSERVO-J3-*T])

Virtual device name	Name	Symbol
TMI0	Input signal for test operation 1	-
TMI1	Input signal for test operation 2	-
TMI2	Input signal for test operation 3	-

When using the input signal for test operation (for test operation), note the following.

Precautions	Description
Writing a value to a virtual device using an object	Numerical input cannot be used. Use a word switch for writing.

■Forced output of signal pin (for test operation) ([MELSERVO-J3-*T])

Virtual device name	Name	Symbol
TMO0	Forced output from signal pin (CN6)	-
TMO1	Forced output from signal pin (CN10)	-

When using the forced output of signal pin (for test operation), note the following.

Precautions	Description
Writing a value to a virtual device using an object	Numerical input cannot be used. Use a word switch for writing.

■Set data (for test operation) ([MELSERVO-J3-*T])

Virtual device name	Name	Symbol
TMD0	Writes the speed (test mode)	-
TMD1	Writes the acceleration/deceleration time constant (test mode)	-
TMD3	Writes the moving distance (test mode)	-

When using the set data (for test operation), note the following.

Precautions	Description
Writing a value to a virtual device using an object	Numerical input cannot be used. Use a word switch for writing.

Precautions for virtual servo amplifier devices ([MELSERVO-J3-*T])

For the precautions for virtual servo amplifier devices, refer to the following.

☞ Page 1555 Precautions for virtual servo amplifier devices ([MELSERVO-J2M-P8A])

[MELSERVO-J4-*A, -JE-*A]

GT 27 GT 25 GT 23 GT 21 GS 25 GS 21

Item	Reference
Specifications of bit devices	☞ Page 1615 Monitoring-supported bit devices ([MELSERVO-J4-*A, -JE-*A])
	☞ Page 1615 Availability of writing/reading data to/from bit devices ([MELSERVO-J4-*A, -JE-*A])
Specifications of word devices	☞ Page 1616 Monitoring-supported word devices ([MELSERVO-J4-*A, -JE-*A])
	☞ Page 1617 Availability of writing/reading data to/from word devices ([MELSERVO-J4-*A, -JE-*A])
Specifications of double-word devices	☞ Page 1617 Monitoring-supported double-word devices ([MELSERVO-J4-*A, -JE-*A])
	☞ Page 1618 Availability of writing/reading data to/from double-word devices ([MELSERVO-J4-*A, -JE-*A])
Specifications of virtual servo amplifier devices	☞ Page 1618 Virtual servo amplifier devices ([MELSERVO-J4-*A, -JE-*A])
	☞ Page 1631 Precautions for virtual servo amplifier devices ([MELSERVO-J4-*A, -JE-*A])

Monitoring-supported bit devices ([MELSERVO-J4-*A, -JE-*A])

The following table shows monitoring-supported virtual bit devices for servo amplifiers.

To check whether writing/reading data to/from each device is available, refer to the following.

☞ Page 1615 Availability of writing/reading data to/from bit devices ([MELSERVO-J4-*A, -JE-*A])

For details on virtual servo amplifier devices, refer to the following.

☞ Page 1618 Virtual servo amplifier devices ([MELSERVO-J4-*A, -JE-*A])

○: Available

×: Not available

Device name		Device No. representation	Setting range	Specifications of EG devices*1	
				Assignment to EG devices	Access using a client
SP	Servo amplifier request	Decimal	0 to 6	×	×
OM	Operation mode selection	Decimal	0 to 4	×	×
TMB	Instruction demand (for test operation)	Decimal	1 to 6	×	×
OTI	One-touch tuning instruction	Decimal	0 to 5	×	×

*1 For the devices assigned to EG devices (gateway devices) and the compatible clients, refer to the following.
GT Designer3 (GOT2000) Screen Design Manual

Availability of writing/reading data to/from bit devices ([MELSERVO-J4-*A, -JE-*A])

The following shows whether writing/reading data to/from bit devices is available by device type.

When the device type is other than the bit type, set the device No. in multiples of 16.

R/W: Both read and write

R/-: Read only

-/W: Write only

-/-: No read/write access

Device name	Device type				
	Bit	Byte (8 bits)	Word (16 bits)	Double-word (32 bits)	Quad-word (64 bits)
SP	-/W	-/-	-/-	-/-	-/-
OM	-/W	-/-	-/-	-/-	-/-
TMB	-/W	-/-	-/-	-/-	-/-
OTI	-/W	-/-	-/-	-/-	-/-

A

Monitoring-supported word devices ([MELSERVO-J4-*A, -JE-*A])

The following table shows monitoring-supported virtual word devices for servo amplifiers.

To check whether writing/reading data to/from each device is available, refer to the following.

☞ Page 1617 Availability of writing/reading data to/from word devices ([MELSERVO-J4-*A, -JE-*A])

For details on virtual servo amplifier devices, refer to the following.

☞ Page 1618 Virtual servo amplifier devices ([MELSERVO-J4-*A, -JE-*A])

○: Available

×: Not available

Device name		Device No. representation	Setting range	Specifications of EG devices*1	
				Assignment to EG devices	Access using a client
PA	Basic parameter	Decimal	1 to 32 1001 to 1032	○	×
PB	Gain filter parameter	Decimal	1 to 64 1001 to 1064	○	×
PC	Extension setting parameter	Decimal	1 to 80 1001 to 1080	○	×
PD	I/O setting parameter	Decimal	1 to 48 1001 to 1048	○	×
PL	Linear servo motor/DD motor setting parameter	Decimal	1 to 48 1001 to 1048	○	×
ST	Status display	Decimal	0 to 41	○	×
AL	Alarm (current alarm, J3A compatible)	Decimal	0 to 1 11 to 25	○	×
AL	Alarm (alarm history, J3A compatible)	Decimal	200 to 205 210 to 215 230 to 235	○	×
PE	Extension setting No.2 parameter	Decimal	1 to 64 1001 to 1064	○	×
PF	Extension setting No.3 parameter	Decimal	1 to 48 1001 to 1048	○	×
ALM	Alarm (current alarm, J4A extend)	Decimal	0 to 1 11 to 52	○	×
ALM	Alarm (alarm history, J4A extend)	Decimal	200 to 215 220 to 235 240 to 255	○	×
MD	Machine diagnosis data	Decimal	0 to 11	×	×
OTS	One-touch tuning data	Decimal	0 to 3	×	×
DI	External input signal	Decimal	0 to 2	×	×
DO	External output signal	Decimal	0 to 1	×	×

*1 For the devices assigned to EG devices (gateway devices) and the compatible clients, refer to the following.
📖GT Designer3 (GOT2000) Screen Design Manual

Availability of writing/reading data to/from word devices ([MELSERVO-J4-*A, -JE-*A])

The following shows the availability of writing/reading data to/from word devices by device type.

R/W: Both read and write

R/-: Read only

-/W: Write only

-/-: No read/write access

Device name	Device type			
	Word (16 bits)	Double-word (32 bits)	Quad-word (64 bits)	Bit of word data
PA	R/W	R/W	-/-	-/-
PB	R/W	R/W	-/-	-/-
PC	R/W	R/W	-/-	-/-
PD	R/W	R/W	-/-	-/-
PL	R/W	R/W	-/-	-/-
ST	R/-	R/-	-/-	-/-
AL	R/-	R/-	-/-	-/-
PE	R/W	R/W	-/-	-/-
PF	R/W	R/W	-/-	-/-
ALM	R/-	R/-	-/-	-/-
MD	R/-	R/-	-/-	-/-
OTS	R/-	R/-	-/-	-/-
DI*1	R/-	R/W	-/-	-/-
DO	R/-	R/-	-/-	-/-

*1 Only reading is available for DI0 and DI1.

Monitoring-supported double-word devices ([MELSERVO-J4-*A, -JE-*A])

The following table shows monitoring-supported virtual double-word devices for servo amplifiers.

To check whether writing/reading data to/from each device is available, refer to the following.

☞ Page 1618 Availability of writing/reading data to/from double-word devices ([MELSERVO-J4-*A, -JE-*A])

For details on virtual servo amplifier devices, refer to the following.

☞ Page 1618 Virtual servo amplifier devices ([MELSERVO-J4-*A, -JE-*A])

○: Available

×: Not available

Device name		Device No. representation	Setting range	Specifications of EG devices*1	
				Assignment to EG devices	Access using a client
ALD	Life diagnosis	Decimal	0 to 1	×	×
TMI	Input signal for test operation (for test operation)	Decimal	0	×	×
TMO	Forced output of signal pin (for test operation)	Decimal	0	×	×
TMD	Set data (for test operation)	Decimal	0 to1, 3	×	×

*1 For the devices assigned to EG devices (gateway devices) and the compatible clients, refer to the following.
GT Designer3 (GOT2000) Screen Design Manual

A

Availability of writing/reading data to/from double-word devices ([MELSERVO-J4-*A, -JE-*A])

The following shows the availability of writing/reading data to/from double-word devices by device type.

R/W: Both read and write

R/-: Read only

-/W: Write only

-/-: No read/write access

Device name	Device type			
	Word (16 bits)	Double-word (32 bits)	Quad-word (64 bits)	Bit of double-word data
ALD	-/-	R/-	-/-	-/-
TMI	-/-	-/W	-/-	-/-
TMO	-/-	-/W	-/-	-/-
TMD	-/-	-/W	-/-	-/-

Virtual servo amplifier devices ([MELSERVO-J4-*A, -JE-*A])

The following shows the correspondence between the virtual devices used in the GOT and the servo amplifier data.

Virtual device name	Reference
SP	☞ Page 1619 Servo amplifier request ([MELSERVO-J4-*A, -JE-*A])
OM	☞ Page 1619 Operation mode selection ([MELSERVO-J4-*A, -JE-*A])
TMB	☞ Page 1619 Instruction demand (for test operation) ([MELSERVO-J4-*A, -JE-*A])
OTI	☞ Page 1620 One-touch tuning instruction ([MELSERVO-J4-*A, -JE-*A])
PA	☞ Page 1620 Basic parameter ([MELSERVO-J4-*A, -JE-*A])
PB	☞ Page 1621 Gain filter parameter ([MELSERVO-J4-*A, -JE-*A])
PC	☞ Page 1622 Extension setting parameter ([MELSERVO-J4-*A, -JE-*A])
PD	☞ Page 1624 I/O setting parameter ([MELSERVO-J4-*A, -JE-*A])
PL	☞ Page 1625 Linear servo motor/DD motor setting parameter ([MELSERVO-J4-*A, -JE-*A])
ST	☞ Page 1625 Status display ([MELSERVO-J4-*A, -JE-*A])
AL	☞ Page 1626 Alarm (MELSERVO-J3-*A compatible) ([MELSERVO-J4-*A, -JE-*A])
PE	☞ Page 1627 Extension setting No.2 parameter ([MELSERVO-J4-*A, -JE-*A])
PF	☞ Page 1627 Extension setting No.3 parameter ([MELSERVO-J4-*A, -JE-*A])
ALM	☞ Page 1628 Alarm (MELSERVO-J4-*A extended) ([MELSERVO-J4-*A, -JE-*A])
MD	☞ Page 1629 Machine diagnosis data ([MELSERVO-J4-*A, -JE-*A])
OTS	☞ Page 1630 One-touch tuning data ([MELSERVO-J4-*A, -JE-*A])
DI	☞ Page 1630 External input signal in MR-J4-□A ([MELSERVO-J4-*A, -JE-*A])
	☞ Page 1630 External input signal in MR-JE-□A ([MELSERVO-J4-*A, -JE-*A])
DO	☞ Page 1630 External output signal in MR-J4-□A ([MELSERVO-J4-*A, -JE-*A])
	☞ Page 1630 External output signal in MR-JE-□A ([MELSERVO-J4-*A, -JE-*A])
ALD	☞ Page 1630 Life diagnosis ([MELSERVO-J4-*A, -JE-*A])
TMI	☞ Page 1631 Input signal for test operation (for test operation) ([MELSERVO-J4-*A, -JE-*A])
TMO	☞ Page 1631 Forced output of signal pin (for test operation) ([MELSERVO-J4-*A, -JE-*A])
TMD	☞ Page 1631 Set data (for test operation) ([MELSERVO-J4-*A, -JE-*A])

■Servo amplifier request ([MELSERVO-J4-*A, -JE-*A])

○: Available

×: Not available

Virtual device name	Name	Symbol	MR-J4-□A	MR-JE-□A
SP0	Status display data clear	-	○	○
SP1	Current alarm clear	-	○	○
SP2	Alarm history clear	-	○	○
SP3	External input signal prohibited	-	○	○
SP4	External output signal prohibited	-	○	○
SP5	External input signal resumed	-	○	○
SP6	External output signal resumed	-	○	○

When using the servo amplifier request, note the following.

Precautions	Description
When setting a device for a bit switch.	Do not select [Alternate] for [Switch Action] of the bit switch.

■Operation mode selection ([MELSERVO-J4-*A, -JE-*A])

○: Available

×: Not available

Virtual device name	Name	Symbol	MR-J4-□A	MR-JE-□A
OM0	Normal mode (not test operation mode)	-	○	○
OM1	JOG operation	-	○	○
OM2	Positioning operation	-	○	○
OM4	Output signal (DO) forced output	-	○	○

When using the operation mode selection, note the following.

Precautions	Description
When setting a device for a bit switch.	Do not select [Alternate] for [Switch Action] of the bit switch.

■Instruction demand (for test operation) ([MELSERVO-J4-*A, -JE-*A])

○: Available

×: Not available

Virtual device name	Name	Symbol	MR-J4-□A	MR-JE-□A
TMB1	Temporary stop command	-	○	○
TMB2	Test operation (positioning operation) start command	-	○	○
TMB3	Forward rotation direction	-	○	○
TMB4	Reverse rotation direction	-	○	○
TMB5	Restart for remaining distance	-	○	○
TMB6	Remaining distance clear	-	○	○

When using the instruction demand (for test operation), note the following.

Precautions	Description
When setting a device for a bit switch.	Do not select [Alternate] for [Switch Action] of the bit switch.

■One-touch tuning instruction ([MELSERVO-J4-*A, -JE-*A])

○: Available

×: Not available

Virtual device name	Name	Symbol	MR-J4-□A	MR-JE-□A
OTI0	One-touch tuning start command (Basic mode)	-	○	○
OTI1	One-touch tuning start command (High mode)	-	○	○
OTI2	One-touch tuning start command (Low mode)	-	○	○
OTI3	One-touch tuning stop command	-	○	○
OTI4	Return to initial value	-	○	○
OTI5	Return to value before adjustment	-	○	○

■Basic parameter ([MELSERVO-J4-*A, -JE-*A])

Use an appropriate device according to the write destination of the servo amplifier.

- PA1 to PA32: Writing data to the RAM of a servo amplifier.
- PA1001 to PA1032: Writing data to the EEPROM of a servo amplifier.

For the parameters prefixed by an asterisk (*), setting becomes effective when the power is turned off once and back on after setting the parameter data.

○: Available

×: Not available

Virtual device name	Name	Symbol	MR-J4-□A	MR-JE-□A
PA1, PA1001	Operation mode	*STY	○	○
PA2, PA1002	Regenerative brake option	*REG	○	○
PA3, PA1003	Absolute position detection system	*ABS	○	×
PA4, PA1004	Function selection A-1	*AOP1	○	○
PA5, PA1005	Number of command input pulses per revolution	*FBP	○	○
PA6, PA1006	Electronic gear numerator (command pulse multiplication numerator)	CMX	○	○
PA7, PA1007	Electronic gear denominator (command pulse multiplication denominator)	CDV	○	○
PA8, PA1008	Auto tuning mode	ATU	○	○
PA9, PA1009	Auto tuning response	RSP	○	○
PA10, PA1010	In-position range	INP	○	○
PA11, PA1011	Forward rotation torque limit	TLP	○	○
PA12, PA1012	Reverse rotation torque limit	TLN	○	○
PA13, PA1013	Command pulse input form	*PLSS	○	○
PA14, PA1014	Rotation direction selection	*POL	○	○
PA15, PA1015	Encoder output pulses	*ENR	○	○
PA16, PA1016	Encoder output pulses 2	*ENR2	○	○
PA17 to PA18, PA1017 to PA1018	For manufacturer setting	-	×	×
PA19, PA1019	Parameter block	*BLK	○	○
PA20, PA1020	Tough drive setting	*TDS	○	○
PA21, PA1021	Function selection A-3	*AOP3	○	○
PA22, PA1022	For manufacturer setting	-	×	×
PA23, PA1023	Drive recorder arbitrary alarm trigger setting	DRAT	○	○
PA24, PA1024	Function selection A-4	*AOP4	○	○
PA25, PA1025	One-touch tuning - Overshoot permissible level	OTHOV	○	○
PA26, PA1026	Function selection A-5	*AOP5	×	○
PA27 to PA32, PA1027 to PA1032	For manufacturer setting	-	×	×

■Gain filter parameter ([MELSERVO-J4-*A, -JE-*A])

Use an appropriate device according to the write destination of the servo amplifier.

- PB1 to PB64: Writing data to the RAM of a servo amplifier.
- PB1001 to PB1064: Writing data to the EEPROM of a servo amplifier.

For the parameters prefixed by an asterisk (*), setting becomes effective when the power is turned off once and back on after setting the parameter data.

○: Available

×: Not available

Virtual device name	Name	Symbol	MR-J4-□A	MR-JE-□A
PB1, PB1001	Adaptive tuning mode (Adaptive filter II)	FILT	○	○
PB2, PB1002	Vibration suppression control tuning mode (advanced vibration suppression control)	VRFT	○	○
PB3, PB1003	Position command acceleration/deceleration time constant (position smoothing)	PST	○	○
PB4, PB1004	Feed forward gain	FFC	○	○
PB5, PB1005	For manufacturer setting	-	×	×
PB6, PB1006	Load inertia moment ratio	GD2	○	○
PB7, PB1007	Model control gain	PG1	○	○
PB8, PB1008	Position control gain	PG2	○	○
PB9, PB1009	Speed control gain	VG2	○	○
PB10, PB1010	Speed integral compensation	VIC	○	○
PB11, PB1011	Speed differential compensation	VDC	○	○
PB12, PB1012	Overshoot amount compensation	OVA	○	○
PB13, PB1013	Machine resonance suppression filter 1	NH1	○	○
PB14, PB1014	Notch shape selection 1	NHQ1	○	○
PB15, PB1015	Machine resonance suppression filter 2	NH2	○	○
PB16, PB1016	Notch shape selection 2	NHQ2	○	○
PB17, PB1017	Shaft resonance suppression filter	NHF	○	○
PB18, PB1018	Low-pass filter setting	LPF	○	○
PB19, PB1019	Vibration suppression control 1 - Vibration frequency	VRF11	○	○
PB20, PB1020	Vibration suppression control 1 - Resonance frequency	VRF12	○	○
PB21, PB1021	Vibration suppression control 1 - Vibration frequency damping	VRF13	○	○
PB22, PB1022	Vibration suppression control 1 - Resonance frequency damping	VRF14	○	○
PB23, PB1023	Low-pass filter setting	VFBF	○	○
PB24, PB1024	Slight vibration suppression control	*MVS	○	○
PB25, PB1025	Function selection B-1	*BOP1	○	○
PB26, PB1026	Gain switching function	*CDP	○	○
PB27, PB1027	Gain switching condition	CDL	○	○
PB28, PB1028	Gain switching time constant	CDT	○	○
PB29, PB1029	Load to motor inertia ratio after gain switching	GD2B	○	○
PB30, PB1030	Position loop gain after gain switching	PG2B	○	○
PB31, PB1031	Speed loop gain after gain switching	VG2B	○	○
PB32, PB1032	Speed integral compensation after gain switching	VICB	○	○
PB33, PB1033	Vibration suppression control 1 - Vibration frequency after gain switching	VRF1B	○	○
PB34, PB1034	Vibration suppression control 1 - Resonance frequency after gain switching	VRF2B	○	○
PB35, PB1035	Vibration suppression control 1 - Vibration frequency damping after gain switching	VRF3B	○	○
PB36, PB1036	Vibration suppression control 1 - Resonance frequency damping after gain switching	VRF4B	○	○
PB37 to PB44, PB1037 to PB1044	For manufacturer setting	-	×	×
PB45, PB1045	Command notch filter	CNHF	○	○

A

Virtual device name	Name	Symbol	MR-J4-□A	MR-JE-□A
PB46, PB1046	Machine resonance suppression filter 3	NH3	○	○
PB47, PB1047	Notch shape selection 3	NHQ3	○	○
PB48, PB1048	Machine resonance suppression filter 4	NH4	○	○
PB49, PB1049	Notch shape selection 4	NHQ4	○	○
PB50, PB1050	Machine resonance suppression filter 5	NH5	○	○
PB51, PB1051	Notch shape selection 5	NHQ5	○	○
PB52, PB1052	Vibration suppression control 2 - Vibration frequency	VRF21	○	○
PB53, PB1053	Vibration suppression control 2 - Resonance frequency	VRF22	○	○
PB54, PB1054	Vibration suppression control 2 - Vibration frequency damping	VRF23	○	○
PB55, PB1055	Vibration suppression control 2 - Resonance frequency damping	VRF24	○	○
PB56, PB1056	Vibration suppression control 2 - Vibration frequency after gain switching	VRF21B	○	○
PB57, PB1057	Vibration suppression control 2 - Resonance frequency after gain switching	VRF22B	○	○
PB58, PB1058	Vibration suppression control 2 - Vibration frequency damping after gain switching	VRF23B	○	○
PB59, PB1059	Vibration suppression control 2 - Resonance frequency damping after gain switching	VRF24B	○	○
PB60, PB1060	Model loop gain after gain switching	PG1B	○	○
PB61 to PB64, PB1061 to PB1064	For manufacturer setting	-	×	×

■Extension setting parameter ([MELSERVO-J4-*A, -JE-*A])

Use an appropriate device according to the write destination of the servo amplifier.

- PC1 to PC80: Writing data to the RAM of a servo amplifier.
- PC1001 to PC1080: Writing data to the EEPROM of a servo amplifier.

For the parameters prefixed by an asterisk (*), setting becomes effective when the power is turned off once and back on after setting the parameter data.

○: Available

×: Not available

Virtual device name	Name	Symbol	MR-J4-□A	MR-JE-□A
PC1, PC1001	Acceleration time constant	STA	○	○
PC2, PC1002	Deceleration time constant	STB	○	○
PC3, PC1003	S-pattern acceleration/deceleration time constant	STC	○	○
PC4, PC1004	Torque command time constant	TQC	○	○
PC5, PC1005	Internal speed command1/limit1	SC1	○	○
PC6, PC1006	Internal speed command2/limit2	SC2	○	○
PC7, PC1007	Internal speed command3/limit3	SC3	○	○
PC8, PC1008	Internal speed command4/limit4	SC4	○	○
PC9, PC1009	Internal speed command5/limit5	SC5	○	○
PC10, PC1010	Internal speed command6/limit6	SC6	○	○
PC11, PC1011	Internal speed command7/limit7	SC7	○	○
PC12, PC1012	Analog speed command maximum speed/limit maximum speed	VCM	○	○
PC13, PC1013	Analog torque command maximum output	TLC	○	○
PC14, PC1014	Analog monitor 1 output	MOD1	○	○
PC15, PC1015	Analog monitor 2 output	MOD2	○	○
PC16, PC1016	Electromagnetic brake sequence output	MBR	○	○
PC17, PC1017	Zero speed	ZSP	○	○
PC18, PC1018	Alarm history clear	*BPS	○	○
PC19, PC1019	Encoder output pulse selection	*ENRS	○	○
PC20, PC1020	Station number setting	*SNO	○	×
PC21, PC1021	Communication function selection	*SOP	○	×
PC22, PC1022	Function selection C-1	*COP1	○	○

Virtual device name	Name	Symbol	MR-J4-□A	MR-JE-□A
PC23, PC1023	Function selection C-2	*COP2	○	○
PC24, PC1024	Function selection C-3	*COP3	○	○
PC25, PC1025	For manufacturer setting	-	×	×
PC26, PC1026	Function selection C-5	*COP5	○	○
PC27, PC1027	Function selection C-6	*COP6	○	○
PC28 to PC29, PC1028 to PC1029	For manufacturer setting	-	×	×
PC30, PC1030	Acceleration time constant 2	STA2	○	○
PC31, PC1031	Deceleration time constant 2	STB2	○	○
PC32, PC1032	Command input pulse multiplication numerator 2	CMX2	○	○
PC33, PC1033	Command input pulse multiplication numerator 3	CMX3	○	○
PC34, PC1034	Command input pulse multiplication numerator 4	CMX4	○	○
PC35, PC1035	Internal torque limit 2	TL2	○	○
PC36, PC1036	Status display selection	*DMD	○	○
PC37, PC1037	Analog speed command offset/limit offset	VCO	○	○
PC38, PC1038	Analog torque command offset/limit offset	TPO	○	○
PC39, PC1039	Analog monitor 1 offset	MO1	○	○
PC40, PC1040	Analog monitor 2 offset	MO2	○	○
PC41 to PC42, PC1041 to PC1042	For manufacturer setting	-	×	×
PC43, PC1043	Error excessive alarm detection level	ERZ	○	○
PC44 to PC 50, PC1044 to PC1050	For manufacturer setting	-	×	×
PC51, PC1051	Forced stop deceleration time constant	RSBR	○	○
PC52 to PC53, PC1052 to PC1053	For manufacturer setting	-	×	×
PC54, PC1054	Vertical axis freefall prevention compensation amount	RSUP1	○	○
PC55 to PC59, PC1055 to PC1059	For manufacturer setting	-	×	×
PC60, PC1060	Function selection C-D	*COPD	○	○
PC61 to PC65, PC1061 to PC1065	For manufacturer setting	-	×	×
PC66, PC1066	Mark detection range+	LPSPL	×	○
PC67, PC1067	Mark detection range+	LPSPH	×	○
PC68, PC1068	Mark detection range-	LPSNL	×	○
PC69, PC1069	Mark detection range-	LPSNH	×	○
PC70, PC1070	Modbus-RTU Communication station number setting	*SNOM	×	○
PC71, PC1071	Function selection C-F	*COPF	×	○
PC72, PC1072	Function selection C-G	*COPG	×	○
PC73, PC1073	Error excessive warning level	ERW	×	○
PC74 to PC80, PC1074 to PC1080	For manufacturer setting	-	×	×

■I/O setting parameter ([MELSERVO-J4-*A, -JE-*A])

Use an appropriate device according to the write destination of the servo amplifier.

- PD1 to PD48: Writing data to the RAM of a servo amplifier.
- PD1001 to PD1048: Writing data to the EEPROM of a servo amplifier.

For the parameters prefixed by an asterisk (*), setting becomes effective when the power is turned off once and back on after setting the parameter data.

○: Available

×: Not available

Virtual device name	Name	Symbol	MR-J4-□A	MR-JE-□A
PD1, PD1001	Input signal automatic on selection 1	*DIA1	○	○
PD2, PD1002	For manufacturer setting	-	×	×
PD3, PD1003	Input device selection 1L	*DI1L	○	○
PD4, PD1004	Input device selection 1H	*DI1H	○	○
PD5, PD1005	Input device selection 2L	*DI2L	○	×
PD6, PD1006	Input device selection 2H	*DI2H	○	×
PD7, PD1007	Input device selection 3L	*DI3L	○	×
PD8, PD1008	Input device selection 3H	*DI3H	○	×
PD9, PD1009	Input device selection 4L	*DI4L	○	×
PD10, PD1010	Input device selection 4H	*DI4H	○	×
PD11, PD1011	Input device selection 5L	*DI5L	○	○
PD12, PD1012	Input device selection 5H	*DI5H	○	○
PD13, PD1013	Input device selection 6L	*DI6L	○	○
PD14, PD1014	Input device selection 6H	*DI6H	○	○
PD15 to PD16, PD1015 to PD1016	For manufacturer setting	-	×	×
PD17, PD1017	Input device selection 8L	*DI8L	○	○
PD18, PD1018	Input device selection 8H	*DI8H	○	○
PD19, PD1019	Input device selection 9L	*DI9L	○	○
PD20, PD1020	Input device selection 9H	*DI9H	○	○
PD21, PD1021	Input device selection 10L	*DI10L	○	×
PD22, PD1022	Input device selection 10H	*DI10H	○	×
PD23, PD1023	Output device selection 1	*DO1	○	×
PD24, PD1024	Output device selection 2	*DO2	○	○
PD25, PD1025	Output device selection 3	*DO3	○	○
PD26, PD1026	Output device selection 4	*DO4	○	×
PD27, PD1027	For manufacturer setting	-	×	×
PD28, PD1028	Output device selection 6	*DO6	○	○
PD29, PD1029	Input filter setting	*DIF	○	○
PD30, PD1030	Function selection D-1	*DOP1	○	○
PD31, PD1031	For manufacturer setting	-	×	×
PD32, PD1032	Function selection D-3	*DOP3	○	○
PD33, PD1033	For manufacturer setting	-	×	×
PD34, PD1034	Function selection D-5	*DOP5	○	○
PD35 to PD40, PD1035 to PD1040	For manufacturer setting	-	×	×
PD41, PD1041	Input signal automatic on selection 3	*DIA3	×	○
PD42, PD1042	Input signal automatic on selection 4	*DIA4	×	○
PD43, PD1043	Input device selection 11L	*DI11L	×	○
PD44, PD1044	Input device selection 11H	*DI11H	×	○
PD45, PD1045	Input device selection 12L	*DI12L	×	○
PD46, PD1046	Input device selection 12H	*DI12H	×	○
PD47 to PD48, PD1047 to PD1048	For manufacturer setting	-	×	×

■Linear servo motor/DD motor setting parameter ([MELSERVO-J4-*A, -JE-*A])

Use an appropriate device according to the write destination of the servo amplifier.

- PL1 to PL48: Writing data to the RAM of a servo amplifier.
- PL1001 to PL1048: Writing data to the EEPROM of a servo amplifier.

For the parameters prefixed by an asterisk (*), setting becomes effective when the power is turned off once and back on after setting the parameter data.

○: Available

×: Not available

Virtual device name	Name	Symbol	MR-J4-□A	MR-JE-□A
PL1, PL1001	Linear servo motor/DD motor function selection 1	*LIT1	○	×
PL2, PL1002	Linear encoder resolution - Numerator	*LIM	○	×
PL3, PL1003	Linear encoder resolution - Denominator	*LID	○	×
PL4, PL1004	Linear servo motor/DD motor function selection 2	*LIT2	○	×
PL5, PL1005	Position deviation error detection level	LB1	○	×
PL6, PL1006	Speed deviation error detection level	LB2	○	×
PL7, PL1007	Torque/thrust deviation error detection level	LB3	○	×
PL8, PL1008	Linear servo motor/DD motor function selection 3	*LIT3	○	×
PL9, PL1009	Magnetic pole detection voltage level	LPWM	○	×
PL10 to PL16, PL1010 to PL1016	For manufacturer setting	-	×	×
PL17, PL1017	Magnetic pole detection - Minute position detection method - Function selection	LTSTS	○	×
PL18, PL1018	Magnetic pole detection - Minute position detection method - Identification signal amplitude	IDLV	○	×
PL19 to PL48, PL1019 to PL1048	For manufacturer setting	-	×	×

■Status display ([MELSERVO-J4-*A, -JE-*A])

○: Available

×: Not available

Virtual device name	Name	Symbol	MR-J4-□A	MR-JE-□A
ST0	Cumulative feedback pulses	-	○	○
ST1	Servo motor speed	-	○	○
ST2	Droop pulses	-	○	○
ST3	Cumulative command pulses	-	○	○
ST4	Command pulse frequency	-	○	○
ST5	Analog speed command voltage/limit voltage	-	○	○
ST6	Analog torque command voltage/limit voltage	-	○	○
ST7	Regenerative load ratio	-	○	○
ST8	Effective load ratio	-	○	○
ST9	Peak load ratio	-	○	○
ST10	Instantaneous torque	-	○	○
ST11	Within one-revolution position (1 pulse unit)	-	○	○
ST12	ABS counter	-	○	○
ST13	Load inertia moment ratio	-	○	○
ST14	Bus voltage	-	○	○
ST15 to ST31	For manufacturer setting	-	×	×
ST32	Internal temperature of encoder	-	○	○
ST33	Settling time	-	○	○
ST34	Oscillation detection frequency	-	○	○
ST35	Number of tough drive operations	-	○	○
ST36 to ST39	For manufacturer setting	-	×	×
ST40	Unit power consumption 1 (increment of 1 W)	-	○	○

Virtual device name	Name	Symbol	MR-J4-□A	MR-JE-□A
ST41	Unit total power consumption 1 (increment of 1 Wh)	-	○	○

■Alarm (MELSERVO-J3-*A compatible) ([MELSERVO-J4-*A, -JE-*A])

○: Available

×: Not available

Virtual device name	Name	Symbol	MR-J4-□A	MR-JE-□A
AL0	Current alarm number	-	○	○
AL1	Detailed data of current alarms	-	○	×
AL11	Servo status when alarm occurs Cumulative feedback pulses	-	○	○
AL12	Servo status when alarm occurs Servo motor speed	-	○	○
AL13	Servo status when alarm occurs Droop pulses	-	○	○
AL14	Servo status when alarm occurs cumulative command pulses	-	○	○
AL15	Servo status when alarm occurs command pulse frequency	-	○	○
AL16	Servo status(alarm) analog speed command voltage/limit voltage	-	○	○
AL17	Servo status(alarm) analog torque command voltage/limit voltage	-	○	○
AL18	Servo status when alarm occurs regenerative load ratio	-	○	○
AL19	Servo status when alarm occurs effective load ratio	-	○	○
AL20	Servo status when alarm occurs peak load ratio	-	○	○
AL21	Servo status when alarm occurs Instantaneous torque	-	○	○
AL22	Servo status(alarm) Within one-revolution position(1 pulse unit)	-	○	○
AL23	Servo status when alarm occurs ABS counter	-	○	○
AL24	Servo status when alarm occurs load inertia moment ratio	-	○	○
AL25	Servo status when alarm occurs Bus voltage	-	○	○
AL200	Alarm number from Alarm History most recent alarm	-	○	○
AL201	Alarm number from Alarm History first alarm in past	-	○	○
AL202	Alarm number from Alarm History second alarm in past	-	○	○
AL203	Alarm number from Alarm History third alarm in past	-	○	○
AL204	Alarm number from Alarm History fourth alarm in past	-	○	○
AL205	Alarm number from Alarm History fifth alarm in past	-	○	○
AL210	Alarm occurrence time in alarm history most recent alarm	-	○	○
AL211	Alarm occurrence time in alarm history first alarm in past	-	○	○
AL212	Alarm occurrence time in alarm history second alarm in past	-	○	○
AL213	Alarm occurrence time in alarm history third alarm in past	-	○	○
AL214	Alarm occurrence time in alarm history fourth alarm in past	-	○	○
AL215	Alarm occurrence time in alarm history fifth alarm in past	-	○	○
AL230	Detailed alarm from Alarm History most recent alarm	-	○	×
AL231	Detailed alarm from Alarm History first alarm in past	-	○	×
AL232	Detailed alarm from Alarm History second alarm in past	-	○	×
AL233	Detailed alarm from Alarm History third alarm in past	-	○	×
AL234	Detailed alarm from Alarm History fourth alarm in past	-	○	×
AL235	Detailed alarm from Alarm History fifth alarm in past	-	○	×

■Extension setting No.2 parameter ([MELSERVO-J4-*A, -JE-*A])

Use an appropriate device according to the write destination of the servo amplifier.

- PE1 to PE64: Writing data to the RAM of a servo amplifier.
- PE1001 to PE1064: Writing data to the EEPROM of a servo amplifier.

For the parameters prefixed by an asterisk (*), setting becomes effective when the power is turned off once and back on after setting the parameter data.

○: Available

×: Not available

Virtual device name	Name	Symbol	MR-J4-□A	MR-JE-□A
PE1 to PE40, PE1001 to PE1040	For manufacturer setting	-	×	×
PE41, PE1041	Function selection E-3	EOP3	○	○
PE42 to PE43, PE1042 to PE1043	For manufacturer setting	-	×	×
PE44, PE1044	Lost motion compensation positive-side compensation value selection	LMCP	×	○
PE45, PE1045	Lost motion compensation negative-side compensation value selection	LMCN	×	○
PE46, PE1046	Lost motion filter setting	LMFLT	×	○
PE47, PE1047	Torque offset	TOF	×	○
PE48, PE1048	Lost motion compensation function selection	*LMOP	×	○
PE49, PE1049	Lost motion compensation timing	LMCD	×	○
PE50, PE1050	Lost motion compensation non-sensitive band	LMCT	×	○
PE51 to PE64, PE1051 to PE1064	For manufacturer setting	-	×	×

■Extension setting No.3 parameter ([MELSERVO-J4-*A, -JE-*A])

Use an appropriate device according to the write destination of the servo amplifier.

- PF1 to PF48: Writing data to the RAM of a servo amplifier.
- PF1001 to PF1048: Writing data to the EEPROM of a servo amplifier.

For the parameters prefixed by an asterisk (*), setting becomes effective when the power is turned off once and back on after setting the parameter data.

○: Available

×: Not available

Virtual device name	Name	Symbol	MR-J4-□A	MR-JE-□A
PF1 to PF8, PF1001 to PF1008	For manufacturer setting	-	×	×
PF9, PF1009	Function selection F-5	*FOP5	○	○
PF10 to PF14, PF1010 to PF1014	For manufacturer setting	-	×	×
PF15, PF1015	Electronic dynamic brake operating time	DBT	○	×
PF16 to PF20, PF1016 to PF1020	For manufacturer setting	-	×	×
PF21, PF1021	Drive recorder switching time setting	DRT	○	○
PF22, PF1022	For manufacturer setting	-	×	×
PF23, PF1023	Vibration tough drive - Oscillation detection level	OSCL1	○	○
PF24, PF1024	Vibration tough drive function selection	OSCL2	○	○
PF25, PF1025	Instantaneous power failure tough drive - Detection time	CVAT	○	○
PF26 to PF30, PF1026 to PF1030	For manufacturer setting	-	×	×
PF31, PF1031	Machine diagnosis function - Friction judgment speed	FRIC	○	○
PF32 to PF44, PF1032 to PF1044	For manufacturer setting	-	×	×
PF45, PF1045	Function selection F-12	-	×	○

Virtual device name	Name	Symbol	MR-J4-□A	MR-JE-□A
PF46, PF1046	Modbus-RTU comm. - Communication time-out time	-	×	○
PF47 to PF48, PF1047 to PF1048	For manufacturer setting	-	×	×

■Alarm (MELSERVO-J4-*A extended) ([MELSERVO-J4-*A, -JE-*A])

○: Available

×: Not available

Virtual device name	Name	Symbol	MR-J4-□A	MR-JE-□A
ALM0	Current alarm number	-	○	○
ALM1	Detailed data of current alarms	-	○	×
ALM11	Servo status(alarm) Cumulative feedback pulses	-	○	○
ALM12	Servo status(alarm) Servo motor speed	-	○	○
ALM13	Servo status(alarm) Droop pulses	-	○	○
ALM14	Servo status(alarm) Cumulative command pulses	-	○	○
ALM15	Servo status(alarm) Command pulse frequency	-	○	○
ALM16	Servo status(alarm) analog speed command voltage/limit voltage	-	○	○
ALM17	Servo status(alarm) analog torque command voltage/limit voltage	-	○	○
ALM18	Servo status(alarm) Regenerative load ratio	-	○	○
ALM19	Servo status(alarm) Effective load ratio	-	○	○
ALM20	Servo status(alarm) Peak load ratio	-	○	○
ALM21	Servo status(alarm) Instantaneous torque	-	○	○
ALM22	Servo status(alarm) Within one-revolution position(1 pulse unit)	-	○	○
ALM23	Servo status(alarm) ABS counter	-	○	○
ALM24	Servo status(alarm) Load inertia moment ratio	-	○	○
ALM25	Servo status(alarm) Bus voltage	-	○	○
ALM26 to ALM42	For manufacturer setting	-	×	×
ALM43	Servo status(alarm) Internal temperature of encoder	-	○	○
ALM44	Servo status(alarm) Setting time	-	○	○
ALM45	Servo status(alarm) Oscillation detection frequency	-	○	○
ALM46	Servo status(alarm) Number of tough drives	-	○	○
ALM47 to ALM50	For manufacturer setting	-	×	×
ALM51	Servo status(alarm) Unit power consumption 1 (increment of 1 W)	-	○	○
ALM52	Servo status(alarm) Unit total power consumption 1 (increment of 1 Wh)	-	○	○
ALM200	Alarm number from Alarm History most recent alarm	-	○	○
ALM201	Alarm number from Alarm History 1st alarm in past	-	○	○
ALM202	Alarm number from Alarm History 2nd alarm in past	-	○	○
ALM203	Alarm number from Alarm History 3rd alarm in past	-	○	○
ALM204	Alarm number from Alarm History 4th alarm in past	-	○	○
ALM205	Alarm number from Alarm History 5th alarm in past	-	○	○
ALM206	Alarm number from Alarm History 6th alarm in past	-	○	○
ALM207	Alarm number from Alarm History 7th alarm in past	-	○	○
ALM208	Alarm number from Alarm History 8th alarm in past	-	○	○
ALM209	Alarm number from Alarm History 9th alarm in past	-	○	○
ALM210	Alarm number from Alarm History 10th alarm in past	-	○	○
ALM211	Alarm number from Alarm History 11th alarm in past	-	○	○
ALM212	Alarm number from Alarm History 12th alarm in past	-	○	○
ALM213	Alarm number from Alarm History 13th alarm in past	-	○	○
ALM214	Alarm number from Alarm History 14th alarm in past	-	○	○
ALM215	Alarm number from Alarm History 15th alarm in past	-	○	○
ALM220	Alarm occurrence time in alarm history most recent alarm	-	○	○
ALM221	Alarm occurrence time in alarm history 1st alarm in past	-	○	○
ALM222	Alarm occurrence time in alarm history 2nd alarm in past	-	○	○

Virtual device name	Name	Symbol	MR-J4-□A	MR-JE-□A
ALM223	Alarm occurrence time in alarm history 3rd alarm in past	-	○	○
ALM224	Alarm occurrence time in alarm history 4th alarm in past	-	○	○
ALM225	Alarm occurrence time in alarm history 5th alarm in past	-	○	○
ALM226	Alarm occurrence time in alarm history 6th alarm in past	-	○	○
ALM227	Alarm occurrence time in alarm history 7th alarm in past	-	○	○
ALM228	Alarm occurrence time in alarm history 8th alarm in past	-	○	○
ALM229	Alarm occurrence time in alarm history 9th alarm in past	-	○	○
ALM230	Alarm occurrence time in alarm history 10th alarm in past	-	○	○
ALM231	Alarm occurrence time in alarm history 11th alarm in past	-	○	○
ALM232	Alarm occurrence time in alarm history 12th alarm in past	-	○	○
ALM233	Alarm occurrence time in alarm history 13th alarm in past	-	○	○
ALM234	Alarm occurrence time in alarm history 14th alarm in past	-	○	○
ALM235	Alarm occurrence time in alarm history 15th alarm in past	-	○	○
ALM240	Detailed alarm from Alarm History most recent alarm	-	○	×
ALM241	Detailed alarm from Alarm History 1st alarm in past	-	○	×
ALM242	Detailed alarm from Alarm History 2nd alarm in past	-	○	×
ALM243	Detailed alarm from Alarm History 3rd alarm in past	-	○	×
ALM244	Detailed alarm from Alarm History 4th alarm in past	-	○	×
ALM245	Detailed alarm from Alarm History 5th alarm in past	-	○	×
ALM246	Detailed alarm from Alarm History 6th alarm in past	-	○	×
ALM247	Detailed alarm from Alarm History 7th alarm in past	-	○	×
ALM248	Detailed alarm from Alarm History 8th alarm in past	-	○	×
ALM249	Detailed alarm from Alarm History 9th alarm in past	-	○	×
ALM250	Detailed alarm from Alarm History 10th alarm in past	-	○	×
ALM251	Detailed alarm from Alarm History 11th alarm in past	-	○	×
ALM252	Detailed alarm from Alarm History 12th alarm in past	-	○	×
ALM253	Detailed alarm from Alarm History 13th alarm in past	-	○	×
ALM254	Detailed alarm from Alarm History 14th alarm in past	-	○	×
ALM255	Detailed alarm from Alarm History 15th alarm in past	-	○	×

■Machine diagnosis data ([MELSERVO-J4-*A, -JE-*A])

○: Available

×: Not available

Virtual device name	Name	Symbol	MR-J4-□A	MR-JE-□A
MD0	Machine diagnosis data station number	-	○	○
MD1	Machine diagnosis data shift judgment(test mode)	-	○	○
MD2	Machine diagnosis data status	-	○	○
MD3	Machine diagnosis data coulomb friction torque in positive direction	-	○	○
MD4	Machine diagnosis data friction torque at rated speed in positive direction	-	○	○
MD5	Machine diagnosis data coulomb friction torque in negative direction	-	○	○
MD6	Machine diagnosis data friction torque at rated speed in negative direction	-	○	○
MD7	Machine diagnosis data oscillation frequency(motor is stopped)	-	○	○
MD8	Machine diagnosis data vibration level(motor is stopped)	-	○	○
MD9	Machine diagnosis data oscillation frequency(motor is operating)	-	○	○
MD10	Machine diagnosis data vibration level(motor is operating)	-	○	○
MD11	Machine diagnosis data, rated speed at forward or reverse rotation torque	-	○	○

■One-touch tuning data ([MELSERVO-J4-*A, -JE-*A])

○: Available

×: Not available

Virtual device name	Name	Symbol	MR-J4-□A	MR-JE-□A
OTS0	One-touch tuning status confirmation	-	○	○
OTS1	Error code list	-	○	○
OTS2	Setting time	-	○	○
OTS3	Overshoot amount	-	○	○

■External input signal in MR-J4-□A ([MELSERVO-J4-*A, -JE-*A])

Virtual device name	Name	Symbol	Data to be read from the servo amplifier
DI0	Input device statuses	-	For the mapping of the bits corresponding to the data to be read, refer to the following. MR-J4-_A_(-RJ)/MR-J4-03A6(-RJ) SERVO AMPLIFIER INSTRUCTION MANUAL
DI1	External input pin statuses	-	
DI2	Statuses of input devices switched on through communication	-	

■External input signal in MR-JE-□A ([MELSERVO-J4-*A, -JE-*A])

Virtual device name	Name	Symbol	Data to be read from the servo amplifier
DI0	Input device statuses	-	System information
DI1	External input pin statuses	-	For the mapping of the bits corresponding to the data to be read, refer to the following. MR-JE-_A SERVO AMPLIFIER INSTRUCTION MANUAL
DI2	Statuses of input devices switched on through communication	-	System information

■External output signal in MR-J4-□A ([MELSERVO-J4-*A, -JE-*A])

Virtual device name	Name	Symbol	Data to be read from the servo amplifier
DO0	Output device statuses	-	For the mapping of the bits corresponding to the data to be read, refer to the following. MR-J4-_A_(-RJ)/MR-J4-03A6(-RJ) SERVO AMPLIFIER INSTRUCTION MANUAL
DO1	External output pin statuses	-	

■External output signal in MR-JE-□A ([MELSERVO-J4-*A, -JE-*A])

Virtual device name	Name	Symbol	Data to be read from the servo amplifier
DO0	Output device statuses	-	For the mapping of the bits corresponding to the data to be read, refer to the following. MR-JE-_A SERVO AMPLIFIER INSTRUCTION MANUAL
DO1	External output pin statuses	-	System information

■Life diagnosis ([MELSERVO-J4-*A, -JE-*A])

○: Available

×: Not available

Virtual device name	Name	Symbol	MR-J4-□A	MR-JE-□A
ALD0	Cumulative power-on time	-	○	○
ALD1	Number of inrush current switching times	-	○	○

■Input signal for test operation (for test operation) ([MELSERVO-J4-*A, -JE-*A])

○: Available

×: Not available

Virtual device name	Name	Symbol	MR-J4-□A	MR-JE-□A
TMI0	Input signal for test operation	-	○	○

When using the input signal for test operation (for test operation), note the following.

Precautions	Description
Writing a value to a virtual device using an object	Numerical input cannot be used. Use a word switch for writing.

■Forced output of signal pin (for test operation) ([MELSERVO-J4-*A, -JE-*A])

○: Available

×: Not available

Virtual device name	Name	Symbol	MR-J4-□A	MR-JE-□A
TMO0	Forced output of signal pin	-	○	○

When using the forced output of signal pin (for test operation), note the following.

Precautions	Description
Writing a value to a virtual device using an object	Numerical input cannot be used. Use a word switch for writing.

■Set data (for test operation) ([MELSERVO-J4-*A, -JE-*A])

○: Available

×: Not available

Virtual device name	Name	Symbol	MR-J4-□A	MR-JE-□A
TMD0	Writes the speed (test mode)	-	○	○
TMD1	Writes the acceleration/deceleration time constant (test mode)	-	○	○
TMD3	Writes the moving distance (test mode)	-	○	○

When using the set data (for test operation), note the following.

Precautions	Description
Writing a value to a virtual device using an object	Numerical input cannot be used. Use a word switch for writing.

Precautions for virtual servo amplifier devices ([MELSERVO-J4-*A, -JE-*A])

For the precautions for virtual servo amplifier devices, refer to the following.

☞ Page 1555 Precautions for virtual servo amplifier devices ([MELSERVO-J2M-P8A])

[MELSERVO-J4-*A-RJ]

GT27 GT25 GT23 GT21 GS25 GS21

Item	Reference
Specifications of bit devices	☞ Page 1632 Monitoring-supported bit devices ([MELSERVO-J4-*A-RJ])
	☞ Page 1632 Availability of writing/reading data to/from bit devices ([MELSERVO-J4-*A-RJ])
Specifications of word devices	☞ Page 1633 Monitoring-supported word devices ([MELSERVO-J4-*A-RJ])
	☞ Page 1634 Availability of writing/reading data to/from word devices ([MELSERVO-J4-*A-RJ])
Specifications of double-word devices	☞ Page 1635 Monitoring-supported double-word devices ([MELSERVO-J4-*A-RJ])
	☞ Page 1635 Availability of writing/reading data to/from double-word devices ([MELSERVO-J4-*A-RJ])
Specifications of virtual servo amplifier devices	☞ Page 1636 Virtual servo amplifier devices ([MELSERVO-J4-*A-RJ])
	☞ Page 1654 Precautions for virtual servo amplifier devices ([MELSERVO-J4-*A-RJ])

Monitoring-supported bit devices ([MELSERVO-J4-*A-RJ])

The following table shows monitoring-supported virtual bit devices for servo amplifiers.

To check whether writing/reading data to/from each device is available, refer to the following.

☞ Page 1632 Availability of writing/reading data to/from bit devices ([MELSERVO-J4-*A-RJ])

For details on virtual servo amplifier devices, refer to the following.

☞ Page 1636 Virtual servo amplifier devices ([MELSERVO-J4-*A-RJ])

○: Available

×: Not available

Device name		Device No. representation	Setting range	Specifications of EG devices*1	
				Assignment to EG devices	Access using a client
SP	Servo amplifier request	Decimal	0 to 6	×	×
OM	Operation mode selection	Decimal	0 to 2, 4 to 5	×	×
TMB	Instruction demand (for test operation)	Decimal	1 to 6	×	×
OTI	One-touch tuning instruction	Decimal	0 to 5	×	×

*1 For the devices assigned to EG devices (gateway devices) and the compatible clients, refer to the following.
GT Designer3 (GOT2000) Screen Design Manual

Availability of writing/reading data to/from bit devices ([MELSERVO-J4-*A-RJ])

The following shows whether writing/reading data to/from bit devices is available by device type.

When the device type is other than the bit type, set the device No. in multiples of 16.

R/W: Both read and write

R/-: Read only

-/W: Write only

-/-: No read/write access

Device name	Device type				
	Bit	Byte (8 bits)	Word (16 bits)	Double-word (32 bits)	Quad-word (64 bits)
SP	-/W	-/-	-/-	-/-	-/-
OM	-/W	-/-	-/-	-/-	-/-
TMB	-/W	-/-	-/-	-/-	-/-
OTI	-/W	-/-	-/-	-/-	-/-

Monitoring-supported word devices ([MELSERVO-J4-*A-RJ])

The following table shows monitoring-supported virtual word devices for servo amplifiers.

To check whether writing/reading data to/from each device is available, refer to the following.

☞ Page 1634 Availability of writing/reading data to/from word devices ([MELSERVO-J4-*A-RJ])

For details on virtual servo amplifier devices, refer to the following.

☞ Page 1636 Virtual servo amplifier devices ([MELSERVO-J4-*A-RJ])

○: Available

×: Not available

Device name		Device No. representation	Setting range	Specifications of EG devices[*1]	
				Assignment to EG devices	Access using a client
PA	Basic parameter	Decimal	1 to 32 1001 to 1032	○	×
PB	Gain filter parameter	Decimal	1 to 64 1001 to 1064	○	×
PC	Extension setting parameter	Decimal	1 to 80 1001 to 1080	○	×
PD	I/O setting parameter	Decimal	1 to 48 1001 to 1048	○	×
PO	Option setting parameter	Decimal	1 to 32 1001 to 1032	○	×
PL	Linear servo motor/DD motor setting parameter	Decimal	1 to 48 1001 to 1048	○	×
PT	Positioning control parameter	Decimal	1 to 48 1001 to 1048	○	×
ST	Status display	Decimal	0 to 48	○	×
AL	Alarm (current alarm, J3A compatible)	Decimal	0 to 1 11 to 25	○	×
AL	Alarm (alarm history, J3A compatible)	Decimal	200 to 205 210 to 215 230 to 235	○	×
PE	Extension setting No.2 parameter	Decimal	1 to 64 1001 to 1064	○	×
PF	Extension setting No.3 parameter	Decimal	1 to 48 1001 to 1048	○	×
ALM	Alarm (current alarm, J4A extend)	Decimal	0 to 1 11 to 59	○	×
ALM	Alarm (alarm history, J4A extend)	Decimal	200 to 215 220 to 235 240 to 255	○	×
POS	Point table (position)	Decimal	1 to 255 1001 to 1255	○	×
SPD	Point table (speed)	Decimal	1 to 255 1001 to 1255	○	×
ACT	Point table (acceleration time constant)	Decimal	1 to 255 1001 to 1255	○	×
DCT	Point table (deceleration time constant)	Decimal	1 to 255 1001 to 1255	○	×
DWL	Point table (dwell)	Decimal	1 to 255 1001 to 1255	○	×
AUX	Point table (auxiliary function)	Decimal	1 to 255 1001 to 1255	○	×
MCD[*2]	Point table (M code)	Decimal	1 to 255 1001 to 1255	○	×
MD	Machine diagnosis data	Decimal	0 to 11	×	×
OTS	One-touch tuning data	Decimal	0 to 3	×	×
DI	External input signal	Decimal	0 to 6	×	×
DO	External output signal	Decimal	0 to 4	×	×

*1 For the devices assigned to EG devices (gateway devices) and the compatible clients, refer to the following.
GT Designer3 (GOT2000) Screen Design Manual
*2 MCD cannot be used as a real number.

Availability of writing/reading data to/from word devices ([MELSERVO-J4-*A-RJ])

The following shows the availability of writing/reading data to/from word devices by device type.

R/W: Both read and write

R/-: Read only

-/W: Write only

-/-: No read/write access

Device name	Device type			
	Word (16 bits)	Double-word (32 bits)	Quad-word (64 bits)	Bit of word data
PA	R/W	R/W	-/-	-/-
PB	R/W	R/W	-/-	-/-
PC	R/W	R/W	-/-	-/-
PD	R/W	R/W	-/-	-/-
PO	R/W	R/W	-/-	-/-
PL	R/W	R/W	-/-	-/-
PT	R/W	R/W	-/-	-/-
ST	R/-	R/-	-/-	-/-
AL	R/-	R/-	-/-	-/-
PE	R/W	R/W	-/-	-/-
PF	R/W	R/W	-/-	-/-
ALM	R/-	R/-	-/-	-/-
POS	R/W	R/W	-/-	-/-
SPD	R/W	R/W	-/-	-/-
ACT	R/W	R/W	-/-	-/-
DCT	R/W	R/W	-/-	-/-
DWL	R/W	R/W	-/-	-/-
AUX	R/W	R/W	-/-	-/-
MCD	R/W	R/W	-/-	-/-
MD	R/-	R/-	-/-	-/-
OTS	R/-	R/-	-/-	-/-
DI*1	R/-	R/W	-/-	-/-
DO	R/-	R/-	-/-	-/-

*1 Only reading is available for DI0 to DI3.

Monitoring-supported double-word devices ([MELSERVO-J4-*A-RJ])

The following table shows monitoring-supported virtual double-word devices for servo amplifiers.

To check whether writing/reading data to/from each device is available, refer to the following.

☞ Page 1635 Availability of writing/reading data to/from double-word devices ([MELSERVO-J4-*A-RJ])

For details on virtual servo amplifier devices, refer to the following.

☞ Page 1636 Virtual servo amplifier devices ([MELSERVO-J4-*A-RJ])

○: Available

×: Not available

Device name		Device No. representation	Setting range	Specifications of EG devices*1	
				Assignment to EG devices	Access using a client
LD	Current position latch data	Decimal	0 to 1	×	×
RR*2	Value of the general-purpose register (Rx)	Decimal	1 to 4 1001 to 1004	×	×
RD	Value of the general-purpose register (Dx)	Decimal	1 to 4	×	×
ALD	Life diagnosis	Decimal	0 to 1	×	×
TMI	Input signal for test operation (for test operation)	Decimal	0 to 2	×	×
TMO	Forced output of signal pin (for test operation)	Decimal	0	×	×
TMD	Set data (for test operation)	Decimal	0 to1, 3	×	×

*1 For the devices assigned to EG devices (gateway devices) and the compatible clients, refer to the following.
📖GT Designer3 (GOT2000) Screen Design Manual

*2 Use the integer number when writing parameters to Rx.

Availability of writing/reading data to/from double-word devices ([MELSERVO-J4-*A-RJ])

The following shows the availability of writing/reading data to/from double-word devices by device type.

R/W: Both read and write

R/-: Read only

-/W: Write only

-/-: No read/write access

Device name	Device type			
	Word (16 bits)	Double-word (32 bits)	Quad-word (64 bits)	Bit of double-word data
LD	-/-	R/-	-/-	-/-
RR	-/-	R/W	-/-	-/-
RD	-/-	R/W	-/-	-/-
ALD	-/-	R/-	-/-	-/-
TMI	-/-	-/W	-/-	-/-
TMO	-/-	-/W	-/-	-/-
TMD	-/-	-/W	-/-	-/-

A

Virtual servo amplifier devices ([MELSERVO-J4-*A-RJ])

The following shows the correspondence between the virtual devices used in the GOT and the servo amplifier data.

Virtual device name	Reference
SP	☞ Page 1637 Servo amplifier request ([MELSERVO-J4-*A-RJ])
OM	☞ Page 1637 Operation mode selection ([MELSERVO-J4-*A-RJ])
TMB	☞ Page 1637 Instruction demand (for test operation) ([MELSERVO-J4-*A-RJ])
OTI	☞ Page 1637 One-touch tuning instruction ([MELSERVO-J4-*A-RJ])
PA	☞ Page 1638 Basic parameter ([MELSERVO-J4-*A-RJ])
PB	☞ Page 1638 Gain filter parameter ([MELSERVO-J4-*A-RJ])
PC	☞ Page 1640 Extension setting parameter ([MELSERVO-J4-*A-RJ])
PD	☞ Page 1642 I/O setting parameter ([MELSERVO-J4-*A-RJ])
PO	☞ Page 1643 Option setting parameter ([MELSERVO-J4-*A-RJ])
PL	☞ Page 1644 Linear servo motor/DD motor setting parameter ([MELSERVO-J4-*A-RJ])
PT	☞ Page 1644 Positioning control parameter ([MELSERVO-J4-*A-RJ])
ST	☞ Page 1646 Status display ([MELSERVO-J4-*A-RJ])
AL	☞ Page 1647 Alarm (MELSERVO-J3-*A compatible) ([MELSERVO-J4-*A-RJ])
PE	☞ Page 1648 Extension setting No.2 parameter ([MELSERVO-J4-*A-RJ])
PF	☞ Page 1649 Extension setting No.3 parameter ([MELSERVO-J4-*A-RJ])
ALM	☞ Page 1650 Alarm (MELSERVO-J4-*A extended) ([MELSERVO-J4-*A-RJ])
POS	☞ Page 1651 Point table (position) ([MELSERVO-J4-*A-RJ])
SPD	☞ Page 1652 Point table (speed) ([MELSERVO-J4-*A-RJ])
ACT	☞ Page 1652 Point table (acceleration time constant) ([MELSERVO-J4-*A-RJ])
DCT	☞ Page 1652 Point table (deceleration time constant) ([MELSERVO-J4-*A-RJ])
DWL	☞ Page 1652 Point table (dwell) ([MELSERVO-J4-*A-RJ])
AUX	☞ Page 1652 Point table (auxiliary function) ([MELSERVO-J4-*A-RJ])
MCD	☞ Page 1652 Point table (M code) ([MELSERVO-J4-*A-RJ])
MD	☞ Page 1653 Machine diagnosis data ([MELSERVO-J4-*A-RJ])
OTS	☞ Page 1653 One-touch tuning data ([MELSERVO-J4-*A-RJ])
DI	☞ Page 1653 External input signal ([MELSERVO-J4-*A-RJ])
DO	☞ Page 1653 External output signal ([MELSERVO-J4-*A-RJ])
LD	☞ Page 1653 Current position latch data ([MELSERVO-J4-*A-RJ])
RR	☞ Page 1654 Value of the general-purpose register (Rx) ([MELSERVO-J4-*A-RJ])
RD	☞ Page 1654 Value of the general-purpose register (Dx) ([MELSERVO-J4-*A-RJ])
ALD	☞ Page 1654 Life diagnosis ([MELSERVO-J4-*A-RJ])
TMI	☞ Page 1654 Input signal for test operation (for test operation) ([MELSERVO-J4-*A-RJ])
TMO	☞ Page 1654 Forced output of signal pin (for test operation) ([MELSERVO-J4-*A-RJ])
TMD	☞ Page 1654 Set data (for test operation) ([MELSERVO-J4-*A-RJ])

■Servo amplifier request ([MELSERVO-J4-*A-RJ])

Virtual device name	Name	Symbol
SP0	Status display data clear	-
SP1	Current alarm clear	-
SP2	Alarm history clear	-
SP3	External input signal prohibited	-
SP4	External output signal prohibited	-
SP5	External input signal resumed	-
SP6	External output signal resumed	-

When using the servo amplifier request, note the following.

Precautions	Description
When setting a device for a bit switch.	Do not select [Alternate] for [Switch Action] of the bit switch.

■Operation mode selection ([MELSERVO-J4-*A-RJ])

Virtual device name	Name	Symbol
OM0	Normal mode (not test operation mode)	-
OM1	JOG operation	-
OM2	Positioning operation	-
OM4	Output signal (DO) forced output	-
OM5	Single-step feed operation	-

When using the operation mode selection, note the following.

Precautions	Description
When setting a device for a bit switch.	Do not select [Alternate] for [Switch Action] of the bit switch.

■Instruction demand (for test operation) ([MELSERVO-J4-*A-RJ])

Virtual device name	Name	Symbol
TMB1	Temporary stop command	-
TMB2	Test operation (positioning operation) start command	-
TMB3	Forward rotation direction	-
TMB4	Reverse rotation direction	-
TMB5	Restart for remaining distance	-
TMB6	Remaining distance clear	-

When using the instruction demand (for test operation), note the following.

Precautions	Description
When setting a device for a bit switch.	Do not select [Alternate] for [Switch Action] of the bit switch.

■One-touch tuning instruction ([MELSERVO-J4-*A-RJ])

Virtual device name	Name	Symbol
OTI0	One-touch tuning start command (Basic mode)	-
OTI1	One-touch tuning start command (High mode)	-
OTI2	One-touch tuning start command (Low mode)	-
OTI3	One-touch tuning stop command	-
OTI4	Return to initial value	-
OTI5	Return to value before adjustment	-

■Basic parameter ([MELSERVO-J4-*A-RJ])

Use an appropriate device according to the write destination of the servo amplifier.

- PA1 to PA32: Writing data to the RAM of a servo amplifier.
- PA1001 to PA1032: Writing data to the EEPROM of a servo amplifier.

For the parameters prefixed by an asterisk (*), setting becomes effective when the power is turned off once and back on after setting the parameter data.

Virtual device name	Name	Symbol
PA1, PA1001	Operation mode	*STY
PA2, PA1002	Regenerative brake option	*REG
PA3, PA1003	Absolute position detection system	*ABS
PA4, PA1004	Function selection A-1	*AOP1
PA5, PA1005	Number of command input pulses per revolution	*FBP
PA6, PA1006	Electronic gear numerator (command pulse multiplication numerator)/number of gear teeth on machine side	*CMX
PA7, PA1007	Electronic gear denominator (command pulse multiplication denominator)/number of gear teeth on servo motor side	*CDV
PA8, PA1008	Auto tuning mode	ATU
PA9, PA1009	Auto tuning response	RSP
PA10, PA1010	In-position range	INP
PA11, PA1011	Forward rotation torque limit/positive direction thrust limit	TLP
PA12, PA1012	Reverse rotation torque limit/negative direction thrust limit	TLN
PA13, PA1013	Command pulse input form	*PLSS
PA14, PA1014	Rotation direction selection/travel direction selection	*POL
PA15, PA1015	Encoder output pulses	*ENR
PA16, PA1016	Encoder output pulses 2	*ENR2
PA17, PA1017	Servo motor series setting	*MSR
PA18, PA1018	Servo motor type setting	*MTY
PA19, PA1019	Parameter block	*BLK
PA20, PA1020	Tough drive setting	*TDS
PA21, PA1021	Function selection A-3	*AOP3
PA22, PA1022	Position control composition selection	*PCS
PA23, PA1023	Drive recorder arbitrary alarm trigger setting	DRAT
PA24, PA1024	Function selection A-4	AOP4
PA25, PA1025	One-touch tuning - Overshoot permissible level	OTHOV
PA26, PA1026	Function selection A-5	*AOP5
PA27 to PA32, PA1027 to PA1032	For manufacturer setting	-

■Gain filter parameter ([MELSERVO-J4-*A-RJ])

Use an appropriate device according to the write destination of the servo amplifier.

- PB1 to PB64: Writing data to the RAM of a servo amplifier.
- PB1001 to PB1064: Writing data to the EEPROM of a servo amplifier.

For the parameters prefixed by an asterisk (*), setting becomes effective when the power is turned off once and back on after setting the parameter data.

Virtual device name	Name	Symbol
PB1, PB1001	Adaptive tuning mode (Adaptive filter II)	FILT
PB2, PB1002	Vibration suppression control tuning mode (advanced vibration suppression control II)	VRFT
PB3, PB1003	Position command acceleration/deceleration time constant (position smoothing)	PST
PB4, PB1004	Feed forward gain	FFC
PB5, PB1005	For manufacturer setting	-
PB6, PB1006	Load to motor inertia ratio/load to motor mass ratio	GD2
PB7, PB1007	Model control gain	PG1
PB8, PB1008	Position control gain	PG2
PB9, PB1009	Speed control gain	VG2

Virtual device name	Name	Symbol
PB10, PB1010	Speed integral compensation	VIC
PB11, PB1011	Speed differential compensation	VDC
PB12, PB1012	Overshoot amount compensation	OVA
PB13, PB1013	Machine resonance suppression filter 1	NH1
PB14, PB1014	Notch shape selection 1	NHQ1
PB15, PB1015	Machine resonance suppression filter 2	NH2
PB16, PB1016	Notch shape selection 2	NHQ2
PB17, PB1017	Shaft resonance suppression filter	NHF
PB18, PB1018	Low-pass filter setting	LPF
PB19, PB1019	Vibration suppression control 1 - Vibration frequency	VRF11
PB20, PB1020	Vibration suppression control 1 - Resonance frequency	VRF12
PB21, PB1021	Vibration suppression control 1 - Vibration frequency damping	VRF13
PB22, PB1022	Vibration suppression control 1 - Resonance frequency damping	VRF14
PB23, PB1023	Low-pass filter setting	VFBF
PB24, PB1024	Slight vibration suppression control	*MVS
PB25, PB1025	Function selection B-1	*BOP1
PB26, PB1026	Gain switching function	*CDP
PB27, PB1027	Gain switching condition	CDL
PB28, PB1028	Gain switching time constant	CDT
PB29, PB1029	Load to motor inertia ratio/load to motor mass ratio after gain switching	GD2B
PB30, PB1030	Position loop gain after gain switching	PG2B
PB31, PB1031	Speed loop gain after gain switching	VG2B
PB32, PB1032	Speed integral compensation after gain switching	VICB
PB33, PB1033	Vibration suppression control 1 - Vibration frequency after gain switching	VRF1B
PB34, PB1034	Vibration suppression control 1 - Resonance frequency after gain switching	VRF2B
PB35, PB1035	Vibration suppression control 1 - Vibration frequency damping after gain switching	VRF3B
PB36, PB1036	Vibration suppression control 1 - Resonance frequency damping after gain switching	VRF4B
PB37 to PB44, PB1037 to PB1044	For manufacturer setting	-
PB45, PB1045	Command notch filter	CNHF
PB46, PB1046	Machine resonance suppression filter 3	NH3
PB47, PB1047	Notch shape selection 3	NHQ3
PB48, PB1048	Machine resonance suppression filter 4	NH4
PB49, PB1049	Notch shape selection 4	NHQ4
PB50, PB1050	Machine resonance suppression filter 5	NH5
PB51, PB1051	Notch shape selection 5	NHQ5
PB52, PB1052	Vibration suppression control 2 - Vibration frequency	VRF21
PB53, PB1053	Vibration suppression control 2 - Resonance frequency	VRF22
PB54, PB1054	Vibration suppression control 2 - Vibration frequency damping	VRF23
PB55, PB1055	Vibration suppression control 2 - Resonance frequency damping	VRF24
PB56, PB1056	Vibration suppression control 2 - Vibration frequency after gain switching	VRF21B
PB57, PB1057	Vibration suppression control 2 - Resonance frequency after gain switching	VRF22B
PB58, PB1058	Vibration suppression control 2 - Vibration frequency damping after gain switching	VRF23B
PB59, PB1059	Vibration suppression control 2 - Resonance frequency damping after gain switching	VRF24B
PB60, PB1060	Model loop gain after gain switching	PG1B
PB61 to PB64, PB1061 to PB1064	For manufacturer setting	-

■Extension setting parameter ([MELSERVO-J4-*A-RJ])

Use an appropriate device according to the write destination of the servo amplifier.

- PC1 to PC80: Writing data to the RAM of a servo amplifier.
- PC1001 to PC1080: Writing data to the EEPROM of a servo amplifier.

For the parameters prefixed by an asterisk (*), setting becomes effective when the power is turned off once and back on after setting the parameter data.

Virtual device name	Name	Symbol
PC1, PC1001	JOG operation acceleration time constant/acceleration time constant 1	STA
PC2, PC1002	JOG operation deceleration time constant/deceleration time constant 1	STB
PC3, PC1003	S-pattern acceleration/deceleration time constant	*STC
PC4, PC1004	Torque command time constant/thrust command time constant	TQC
PC5, PC1005	Automatic operation speed 1	SC1
PC6, PC1006	Automatic operation speed 2	SC2
PC7, PC1007	Manual operation speed 1	SC3
PC8, PC1008	Internal speed command4/limit4	SC4
PC9, PC1009	Internal speed command5/limit5	SC5
PC10, PC1010	Internal speed command6/limit6	SC6
PC11, PC1011	Internal speed command7/limit7	SC7
PC12, PC1012	Analog speed command maximum speed/limit maximum speed	VCM
PC13, PC1013	Analog torque command maximum output	TLC
PC14, PC1014	Analog monitor 1 output	MOD1
PC15, PC1015	Analog monitor 2 output	MOD2
PC16, PC1016	Electromagnetic brake sequence output	MBR
PC17, PC1017	Zero speed	ZSP
PC18, PC1018	Alarm history clear	*BPS
PC19, PC1019	Encoder output pulse selection	*ENRS
PC20, PC1020	Station number setting	*SNO
PC21, PC1021	RS-422 communication function selection	*SOP
PC22, PC1022	Function selection C-1	*COP1
PC23, PC1023	Function selection C-2	*COP2
PC24, PC1024	Function selection C-3	*COP3
PC25, PC1025	For manufacturer setting	-
PC26, PC1026	Function selection C-5	*COP5
PC27, PC1027	Function selection C-6	*COP6
PC28, PC1028	Function selection C-7	*COP7
PC29, PC1029	For manufacturer setting	-
PC30, PC1030	Home position return acceleration time constant/acceleration time constant 2	STA2
PC31, PC1031	Home position return deceleration time constant/deceleration time constant 2	STB2
PC32, PC1032	Command input pulse multiplication numerator 2	CMX2
PC33, PC1033	Command input pulse multiplication numerator 3	CMX3
PC34, PC1034	Command input pulse multiplication numerator 4	CMX4
PC35, PC1035	Internal torque limit 2/internal thrust limit 2	TL2
PC36, PC1036	Status display selection	*DMD
PC37, PC1037	Analog override offset	VCO
PC38, PC1038	Analog torque command offset/limit offset	TPO
PC39, PC1039	Analog monitor 1 offset	MO1
PC40, PC1040	Analog monitor 2 offset	MO2
PC41 to PC42, PC1041 to PC1042	For manufacturer setting	-
PC43, PC1043	Error excessive alarm detection level	ERZ
PC44, PC1044	Function selection C-9	*COP9
PC45, PC1045	Function selection C-A	*COPA
PC46 to PC50, PC1046 to PC1050	For manufacturer setting	-

Virtual device name	Name	Symbol
PC51, PC1051	Forced stop deceleration time constant	RSBR
PC52 to PC53, PC1052 to PC1053	For manufacturer setting	-
PC54, PC1054	Vertical axis freefall prevention compensation amount	RSUP1
PC55 to PC59, PC1055 to PC1059	For manufacturer setting	-
PC60, PC1060	Function selection C-D	*COPD
PC61 to PC65, PC1061 to PC1065	For manufacturer setting	-
PC66, PC1066	Mark detection range+(Low)	LPSPL
PC67, PC1067	Mark detection range+(High)	LPSPH
PC68, PC1068	Mark detection range-(Low)	LPSNL
PC69, PC1069	Mark detection range-(High)	LPSNH
PC70, PC1070	Modbus-RTU Communication station number setting	*SNOM
PC71, PC1071	Function selection C-F	*COPF
PC72, PC1072	Function selection C-G	*COPG
PC73, PC1073	Error excessive warning level	ERW
PC74 to PC80, PC1074 to PC1080	For manufacturer setting	-

■I/O setting parameter ([MELSERVO-J4-*A-RJ])

Use an appropriate device according to the write destination of the servo amplifier.

- PD1 to PD48: Writing data to the RAM of a servo amplifier.
- PD1001 to PD1048: Writing data to the EEPROM of a servo amplifier.

For the parameters prefixed by an asterisk (*), setting becomes effective when the power is turned off once and back on after setting the parameter data.

Virtual device name	Name	Symbol
PD1, PD1001	Input signal automatic on selection 1	*DIA1
PD2, PD1002	For manufacturer setting	-
PD3, PD1003	Input device selection 1L	*DI1L
PD4, PD1004	Input device selection 1H	*DI1H
PD5, PD1005	Input device selection 2L	*DI2L
PD6, PD1006	Input device selection 2H	*DI2H
PD7, PD1007	Input device selection 3L	*DI3L
PD8, PD1008	Input device selection 3H	*DI3H
PD9, PD1009	Input device selection 4L	*DI4L
PD10, PD1010	Input device selection 4H	*DI4H
PD11, PD1011	Input device selection 5L	*DI5L
PD12, PD1012	Input device selection 5H	*DI5H
PD13, PD1013	Input device selection 6L	*DI6L
PD14, PD1014	Input device selection 6H	*DI6H
PD15 to PD16, PD1015 to PD1016	For manufacturer setting	-
PD17, PD1017	Input device selection 8L	*DI8L
PD18, PD1018	Input device selection 8H	*DI8H
PD19, PD1019	Input device selection 9L	*DI9L
PD20, PD1020	Input device selection 9H	*DI9H
PD21, PD1021	Input device selection 10L	*DI10L
PD22, PD1022	Input device selection 10H	*DI10H
PD23, PD1023	Output device selection 1	*DO1
PD24, PD1024	Output device selection 2	*DO2
PD25, PD1025	Output device selection 3	*DO3
PD26, PD1026	Output device selection 4	*DO4
PD27, PD1027	For manufacturer setting	-
PD28, PD1028	Output device selection 6	*DO6
PD29, PD1029	Input filter setting	*DIF
PD30, PD1030	Function selection D-1	*DOP1
PD31, PD1031	Function selection D-2	*DOP2
PD32, PD1032	Function selection D-3	*DOP3
PD33, PD1033	Function selection D-4	*DOP4
PD34, PD1034	Function selection D-5	*DOP5
PD35 to PD40, PD1035 to PD1040	For manufacturer setting	-
PD41, PD1041	Input signal automatic on selection 3	*DIA3
PD42, PD1042	Input signal automatic on selection 4	*DIA4
PD43, PD1043	Input device selection 11L	*DI11L
PD44, PD1044	Input device selection 11H	*DI11H
PD45, PD1045	Input device selection 12L	*DI12L
PD46, PD1046	Input device selection 12H	*DI12H
PD47, PD1047	Output device selection 7	*DO7
PD48, PD1048	For manufacturer setting	-

■Option setting parameter ([MELSERVO-J4-*A-RJ])

Use an appropriate device according to the write destination of the servo amplifier.

- PO1 to PO32: Writing data to the RAM of a servo amplifier.
- PO1001 to PO1032: Writing data to the EEPROM of a servo amplifier.

For the parameters prefixed by an asterisk (*), setting becomes effective when the power is turned off once and back on after setting the parameter data.

Virtual device name	Name	Symbol
PO1, PO1001	For manufacturer setting	-
PO2, PO1002	MR-D01 input device selection 1	*ODI1
PO3, PO1003	MR-D01 input device selection 2	*ODI2
PO4, PO1004	MR-D01 input device selection 3	*ODI3
PO5, PO1005	MR-D01 input device selection 4	*ODI4
PO6, PO1006	MR-D01 input device selection 5	*ODI5
PO7, PO1007	MR-D01 input device selection 6	*ODI6
PO8, PO1008	MR-D01 output device selection 1	*ODO1
PO9, PO1009	MR-D01 output device selection 2	*ODO2
PO10, PO1010	Function selection O-1	*OOP1
PO11, PO1011	Function selection O-2	*OOP2
PO12, PO1012	Function selection O-3	*OOP3
PO13, PO1013	MR-D01 analog monitor 1 output selection	OMOD1
PO14, PO1014	MR-D01 analog monitor 2 output selection	OMOD2
PO15, PO1015	MR-D01 analog monitor 1 offset	OMO1
PO16, PO1016	MR-D01 analog monitor 2 offset	OMO2
PO17 to PO20, PO1017 to PO1020	For manufacturer setting	-
PO21, PO1021	MR-D01 override offset	OVCO
PO22, PO1022	MR-D01 analog torque limit offset	OTLO
PO23 to PO26, PO1023 to PO1026	For manufacturer setting	-
PO27, PO1027	MR-D01 input device selection 7	*ODI7
PO28, PO1028	MR-D01 input device selection 8	*ODI8
PO29 to PO32, PO1029 to PO1032	For manufacturer setting	-

■Linear servo motor/DD motor setting parameter ([MELSERVO-J4-*A-RJ])

Use an appropriate device according to the write destination of the servo amplifier.

- PL1 to PL48: Writing data to the RAM of a servo amplifier.
- PL1001 to PL1048: Writing data to the EEPROM of a servo amplifier.

For the parameters prefixed by an asterisk (*), setting becomes effective when the power is turned off once and back on after setting the parameter data.

Virtual device name	Name	Symbol
PL1, PL1001	Linear servo motor/DD motor function selection 1	*LIT1
PL2, PL1002	Linear encoder resolution - Numerator	*LIM
PL3, PL1003	Linear encoder resolution - Denominator	*LID
PL4, PL1004	Linear servo motor/DD motor function selection 2	*LIT2
PL5, PL1005	Position deviation error detection level	LB1
PL6, PL1006	Speed deviation error detection level	LB2
PL7, PL1007	Torque/thrust deviation error detection level	LB3
PL8, PL1008	Linear servo motor/DD motor function selection 3	*LIT3
PL9, PL1009	Magnetic pole detection voltage level	LPWM
PL10 to PL16, PL1010 to PL1016	For manufacturer setting	-
PL17, PL1017	Magnetic pole detection - Minute position detection method - Function selection	LTSTS
PL18, PL1018	Magnetic pole detection - Minute position detection method - Identification signal amplitude	IDLV
PL19 to PL48, PL1019 to PL1048	For manufacturer setting	-

■Positioning control parameter ([MELSERVO-J4-*A-RJ])

Use an appropriate device according to the write destination of the servo amplifier.

- PT1 to PT48: Writing data to the RAM of a servo amplifier.
- PT1001 to PT1048: Writing data to the EEPROM of a servo amplifier.

For the parameters prefixed by an asterisk (*), setting becomes effective when the power is turned off once and back on after setting the parameter data.

Virtual device name	Name	Symbol
PT1, PT1001	Command mode selection	*CTY
PT2, PT1002	Function selection T-1	*TOP1
PT3, PT1003	Feeding function selection	*FTY
PT4, PT1004	Home position return type	*ZTY
PT5, PT1005	Home position return speed	ZRF
PT6, PT1006	Creep speed	CRF
PT7, PT1007	Home position shift distance	ZST
PT8, PT1008	Home position return position data	*ZPS
PT9, PT1009	Moving distance after proximity dog	DCT
PT10, PT1010	Stopper type home position return stopper time	ZTM
PT11, PT1011	Stopper type home position return torque limit value	ZTT
PT12, PT1012	Rough match output range	CRP
PT13, PT1013	JOG operation	JOG
PT14, PT1014	Backlash compensation	*BKC
PT15, PT1015	Software limit +(Low)	LMPL
PT16, PT1016	Software limit +(High)	LMPH
PT17, PT1017	Software limit -(Low)	LMNL
PT18, PT1018	Software limit -(High)	LMNH
PT19, PT1019	Position range output address +(Low)	*LPPL
PT20, PT1020	Position range output address +(High)	*LPPH
PT21, PT1021	Position range output address -(Low)	*LNPL
PT22, PT1022	Position range output address -(High)	*LNPH
PT23, PT1023	OUT1 output setting time	OUT1
PT24, PT1024	OUT2 output setting time	OUT2

Virtual device name	Name	Symbol
PT25, PT1025	OUT3 output setting time	OUT3
PT26, PT1026	Function selection T-2	*TOP2
PT27, PT1027	Operation mode selection	*ODM
PT28, PT1028	Number of stations per rotation	*STN
PT29, PT1029	Function selection T-3	*TOP3
PT30, PT1030	Mark sensor stop movement amount (Low)	MSTL
PT31, PT1031	Mark sensor stop movement amount (High)	MSTH
PT32 to PT33, PT1032 to PT1033	For manufacturer setting	-
PT34, PT1034	Point table/program default	*PDEF
PT35, PT1035	Function selection T-5	*TOP5
PT36 to PT37, PT1036 to PT1037	For manufacturer setting	-
PT38, PT1038	Function selection T-7	*TOP7
PT39, PT1039	Torque limit delay time	INT
PT40, PT1040	Station home position shift distance	*SZS
PT41, PT1041	Home position return inhibit selection	ORP
PT42, PT1042	Digital override minimum multiplication	*OVM
PT43, PT1043	Digital override pitch width	*OVS
PT44, PT1044	For manufacturer setting	-
PT45, PT1045	Home position return type 2	*CZTY
PT46 to PT48, PT1046 to PT1048	For manufacturer setting	-

■Status display ([MELSERVO-J4-*A-RJ])

Virtual device name	Name	Symbol
ST0	Cumulative feedback pulses	-
ST1	Servo motor speed	-
ST2	Droop pulses	-
ST3	Cumulative command pulses	-
ST4	Command pulse frequency	-
ST5	Analog speed command voltage/analog speed limit voltage	-
ST6	Analog torque limit voltage/analog torque command voltage	-
ST7	Regenerative load ratio	-
ST8	Effective load ratio	-
ST9	Peak load ratio	-
ST10	Instantaneous torque	-
ST11	Within one-revolution position	-
ST12	ABS counter	-
ST13	Load inertia moment ratio	-
ST14	Bus voltage	-
ST15	Load-side cumulative feedback pulses	-
ST16	Load-side droop pulses	-
ST17	Load-side encoder information 1	-
ST18	Load-side encoder information 2	-
ST19 to ST21	For manufacturer setting	-
ST22	Temperature of servo motor thermistor	-
ST23	Servo motor-side cumulative feedback pulses (before gear)	-
ST24	Electrical angle	-
ST25 to ST29	For manufacturer setting	-
ST30	Servo motor-side/load-side position deviation	-
ST31	Servo motor-side/load-side speed deviation	-
ST32	Internal temperature of encoder	-
ST33	Settling time	-
ST34	Oscillation detection frequency	-
ST35	Number of tough drive operations	-
ST36 to ST39	For manufacturer setting	-
ST40	Unit power consumption	-
ST41	Unit total power consumption	-
ST42	Current position	-
ST43	Command position	-
ST44	Command remaining distance	-
ST45	Point table No./program No./station position No.	-
ST46	Step No.	-
ST47	Analog override voltage	-
ST48	Override level	-

■Alarm (MELSERVO-J3-*A compatible) ([MELSERVO-J4-*A-RJ])

Virtual device name	Name	Symbol
AL0	Current alarm number	-
AL1	Detailed data of current alarms	-
AL11	Servo status when alarm occurs Cumulative feedback pulses	-
AL12	Servo status when alarm occurs Servo motor speed	-
AL13	Servo status when alarm occurs Droop pulses	-
AL14	Servo status when alarm occurs cumulative command pulses	-
AL15	Servo status when alarm occurs command pulse frequency	-
AL16	Servo status(alarm) analog speed command voltage/limit voltage	-
AL17	Servo status(alarm) analog torque command voltage/limit voltage	-
AL18	Servo status when alarm occurs regenerative load ratio	-
AL19	Servo status when alarm occurs effective load ratio	-
AL20	Servo status when alarm occurs peak load ratio	-
AL21	Servo status when alarm occurs Instantaneous torque	-
AL22	Servo status(alarm) Within one-revolution position(1 pulse unit)	-
AL23	Servo status when alarm occurs ABS counter	-
AL24	Servo status when alarm occurs load inertia moment ratio	-
AL25	Servo status when alarm occurs Bus voltage	-
AL200	Alarm number from Alarm History most recent alarm	-
AL201	Alarm number from Alarm History first alarm in past	-
AL202	Alarm number from Alarm History second alarm in past	-
AL203	Alarm number from Alarm History third alarm in past	-
AL204	Alarm number from Alarm History fourth alarm in past	-
AL205	Alarm number from Alarm History fifth alarm in past	-
AL210	Alarm occurrence time in alarm history most recent alarm	-
AL211	Alarm occurrence time in alarm history first alarm in past	-
AL212	Alarm occurrence time in alarm history second alarm in past	-
AL213	Alarm occurrence time in alarm history third alarm in past	-
AL214	Alarm occurrence time in alarm history fourth alarm in past	-
AL215	Alarm occurrence time in alarm history fifth alarm in past	-
AL230	Detailed alarm from Alarm History most recent alarm	-
AL231	Detailed alarm from Alarm History first alarm in past	-
AL232	Detailed alarm from Alarm History second alarm in past	-
AL233	Detailed alarm from Alarm History third alarm in past	-
AL234	Detailed alarm from Alarm History fourth alarm in past	-
AL235	Detailed alarm from Alarm History fifth alarm in past	-

■Extension setting No.2 parameter ([MELSERVO-J4-*A-RJ])

Use an appropriate device according to the write destination of the servo amplifier.

- PE1 to PE64: Writing data to the RAM of a servo amplifier.
- PE1001 to PE1064: Writing data to the EEPROM of a servo amplifier.

For the parameters prefixed by an asterisk (*), setting becomes effective when the power is turned off once and back on after setting the parameter data.

Virtual device name	Name	Symbol
PE1, PE1001	Fully closed loop function selection 1	*FCT1
PE2, PE1002	For manufacturer setting	-
PE3, PE1003	Fully closed loop function selection 2	*FCT2
PE4, PE1004	Fully closed loop control - Feedback pulse electronic gear 1 - Numerator	*FBN
PE5, PE1005	Fully closed loop control - Feedback pulse electronic gear 1 - Denominator	*FBD
PE6, PE1006	Fully closed loop control - Speed deviation error detection level	BC1
PE7, PE1007	Fully closed loop control - Position deviation error detection level	BC2
PE8, PE1008	Fully closed loop dual feedback filter	DUF
PE9, PE1009	For manufacturer setting	-
PE10, PE1010	Fully closed loop function selection 3	FCT3
PE11 to PE33, PE1011 to PE1033	For manufacturer setting	-
PE34, PE1034	Fully closed loop control - Feedback pulse electronic gear 2 - Numerator	*FBN2
PE35, PE1035	Fully closed loop control - Feedback pulse electronic gear 2 - Denominator	*FBD2
PE36 to PE40, PE1036 to PE1040	For manufacturer setting	-
PE41, PE1041	Function selection E-3	EOP3
PE42 to PE43, PE1042 to PE1043	For manufacturer setting	-
PE44, PE1044	Lost motion compensation positive-side compensation value selection	LMCP
PE45, PE1045	Lost motion compensation negative-side compensation value selection	LMCN
PE46, PE1046	Lost motion filter setting	LMFLT
PE47, PE1047	Torque offset	TOF
PE48, PE1048	Lost motion compensation function selection	*LMOP
PE49, PE1049	Lost motion compensation timing	LMCD
PE50, PE1050	Lost motion compensation non-sensitive band	LMCT
PE51 to PE64, PE1051 to PE1064	For manufacturer setting	-

■Extension setting No.3 parameter ([MELSERVO-J4-*A-RJ])

Use an appropriate device according to the write destination of the servo amplifier.

- PF1 to PF48: Writing data to the RAM of a servo amplifier.
- PF1001 to PF1048: Writing data to the EEPROM of a servo amplifier.

For the parameters prefixed by an asterisk (*), setting becomes effective when the power is turned off once and back on after setting the parameter data.

Virtual device name	Name	Symbol
PF1 to PF8, PF1001 to PF1008	For manufacturer setting	-
PF9, PF1009	Function selection F-5	*FOP5
PF10 to PF14, PF1010 to PF1014	For manufacturer setting	-
PF15, PF1015	Electronic dynamic brake operating time	DBT
PF16 to PF17, PF1016 to PF1017	For manufacturer setting	-
PF18, PF1018	STO diagnosis error detection time	*STOD
PF19 to PF20, PF1019 to PF1020	For manufacturer setting	-
PF21, PF1021	Drive recorder switching time setting	DRT
PF22, PF1022	For manufacturer setting	-
PF23, PF1023	Vibration tough drive - Oscillation detection level	OSCL1
PF24, PF1024	Vibration tough drive function selection	OSCL2
PF25, PF1025	SEMI-F47 function - Instantaneous power failure detection time	CVAT
PF26 to PF30, PF1026 to PF1030	For manufacturer setting	-
PF31, PF1031	Machine diagnosis function - Friction judgment speed	FRIC
PF32 to PF33, PF1032 to PF1033	For manufacturer setting	-
PF34, PF1034	RS-422 communication function selection 3	*SOP3
PF35 to PF44, PF1035 to PF1044	For manufacturer setting	-
PF45, PF1045	Function selection F-12	*FOP12
PF46, PF1046	Modbus-RTU comm. - Communication time-out time	MIC
PF47 to PF48, PF1047 to PF1048	For manufacturer setting	-

■Alarm (MELSERVO-J4-*A extended) ([MELSERVO-J4-*A-RJ])

Virtual device name	Name	Symbol
ALM0	Current alarm number	-
ALM1	Detailed data of current alarms	-
ALM11	Servo status(alarm) Cumulative feedback pulses	-
ALM12	Servo status(alarm) Servo motor speed	-
ALM13	Servo status(alarm) Droop pulses	-
ALM14	Servo status(alarm) cumulative command pulses	-
ALM15	Servo status(alarm) command pulse frequency	-
ALM16	Servo status(alarm) analog speed command voltage/limit voltage	-
ALM17	Servo status(alarm) analog torque command voltage/limit voltage	-
ALM18	Servo status(alarm) regenerative load ratio	-
ALM19	Servo status(alarm) effective load ratio	-
ALM20	Servo status(alarm) peak load ratio	-
ALM21	Servo status(alarm) Instantaneous torque	-
ALM22	Servo status(alarm) Within one-revolution position(1 pulse unit)	-
ALM23	Servo status(alarm) ABS counter	-
ALM24	Servo status(alarm) load inertia moment ratio	-
ALM25	Servo status(alarm) Bus voltage	-
ALM26	Servo status(alarm) Load-side cumulative feedback pulses	-
ALM27	Servo status(alarm) Load-side droop pulses	-
ALM28	Servo status(alarm) Load-side encoder information 1	-
ALM29	Servo status(alarm) Load-side encoder information 2	-
ALM30 to ALM32	For manufacturer setting	-
ALM33	Servo status(alarm) Temperature of servo motor thermistor	-
ALM34	Servo status(alarm) Servo motor-side cumulative feedback pulses (before gear)	-
ALM35	Servo status(alarm) Electrical angle	-
ALM36 to ALM40	For manufacturer setting	-
ALM41	Servo status(alarm) Servo motor-side/load-side position deviation	-
ALM42	Servo status(alarm) Servo motor-side/load-side speed deviation	-
ALM43	Servo status(alarm) Internal temperature of encoder	-
ALM44	Servo status(alarm) Settling time	-
ALM45	Servo status(alarm) Oscillation detection frequency	-
ALM46	Servo status(alarm) Number of tough drives	-
ALM47 to ALM50	For manufacturer setting	-
ALM51	Servo status(alarm) Unit power consumption	-
ALM52	Servo status(alarm) Unit total power consumption	-
ALM53	Servo status(alarm) Current position	-
ALM54	Servo status(alarm) Command position	-
ALM55	Servo status(alarm) Command remaining distance	-
ALM56	Servo status(alarm) Point table No./Program No./Station position No.	-
ALM57	Servo status(alarm) Step No.	-
ALM58	Servo status(alarm) Analog override voltage	-
ALM59	Servo status(alarm) Override level	-
ALM200	Alarm number from Alarm History most recent alarm	-
ALM201	Alarm number from Alarm History 1st alarm in past	-
ALM202	Alarm number from Alarm History 2nd alarm in past	-
ALM203	Alarm number from Alarm History 3rd alarm in past	-
ALM204	Alarm number from Alarm History 4th alarm in past	-
ALM205	Alarm number from Alarm History 5th alarm in past	-
ALM206	Alarm number from Alarm History 6th alarm in past	-
ALM207	Alarm number from Alarm History 7th alarm in past	-
ALM208	Alarm number from Alarm History 8th alarm in past	-

Virtual device name	Name	Symbol
ALM209	Alarm number from Alarm History 9th alarm in past	-
ALM210	Alarm number from Alarm History 10th alarm in past	-
ALM211	Alarm number from Alarm History 11th alarm in past	-
ALM212	Alarm number from Alarm History 12th alarm in past	-
ALM213	Alarm number from Alarm History 13th alarm in past	-
ALM214	Alarm number from Alarm History 14th alarm in past	-
ALM215	Alarm number from Alarm History 15th alarm in past	-
ALM220	Alarm occurrence time in alarm history most recent alarm	-
ALM221	Alarm occurrence time in alarm history 1st alarm in past	-
ALM222	Alarm occurrence time in alarm history 2nd alarm in past	-
ALM223	Alarm occurrence time in alarm history 3rd alarm in past	-
ALM224	Alarm occurrence time in alarm history 4th alarm in past	-
ALM225	Alarm occurrence time in alarm history 5th alarm in past	-
ALM226	Alarm occurrence time in alarm history 6th alarm in past	-
ALM227	Alarm occurrence time in alarm history 7th alarm in past	-
ALM228	Alarm occurrence time in alarm history 8th alarm in past	-
ALM229	Alarm occurrence time in alarm history 9th alarm in past	-
ALM230	Alarm occurrence time in alarm history 10th alarm in past	-
ALM231	Alarm occurrence time in alarm history 11th alarm in past	-
ALM232	Alarm occurrence time in alarm history 12th alarm in past	-
ALM233	Alarm occurrence time in alarm history 13th alarm in past	-
ALM234	Alarm occurrence time in alarm history 14th alarm in past	-
ALM235	Alarm occurrence time in alarm history 15th alarm in past	-
ALM240	Detailed alarm from Alarm History most recent alarm	-
ALM241	Detailed alarm from Alarm History 1st alarm in past	-
ALM242	Detailed alarm from Alarm History 2nd alarm in past	-
ALM243	Detailed alarm from Alarm History 3rd alarm in past	-
ALM244	Detailed alarm from Alarm History 4th alarm in past	-
ALM245	Detailed alarm from Alarm History 5th alarm in past	-
ALM246	Detailed alarm from Alarm History 6th alarm in past	-
ALM247	Detailed alarm from Alarm History 7th alarm in past	-
ALM248	Detailed alarm from Alarm History 8th alarm in past	-
ALM249	Detailed alarm from Alarm History 9th alarm in past	-
ALM250	Detailed alarm from Alarm History 10th alarm in past	-
ALM251	Detailed alarm from Alarm History 11th alarm in past	-
ALM252	Detailed alarm from Alarm History 12th alarm in past	-
ALM253	Detailed alarm from Alarm History 13th alarm in past	-
ALM254	Detailed alarm from Alarm History 14th alarm in past	-
ALM255	Detailed alarm from Alarm History 15th alarm in past	-

■Point table (position) ([MELSERVO-J4-*A-RJ])

Use an appropriate device according to the write destination of the servo amplifier.

- POS1 to POS255: Writing data to the RAM of a servo amplifier.
- POS1001 to POS1255: Writing data to the EEPROM of a servo amplifier.

Virtual device name	Name	Symbol
POS1 to POS255, POS1001 to POS1255	Point table/position data No. 1 to No. 255	-

A

■Point table (speed) ([MELSERVO-J4-*A-RJ])

Use an appropriate device according to the write destination of the servo amplifier.

- SPD1 to SPD255: Writing data to the RAM of a servo amplifier.
- SPD1001 to SPD1255: Writing data to the EEPROM of a servo amplifier.

Virtual device name	Name	Symbol
SPD1 to SPD255, SPD1001 to SPD1255	Point table/speed data No. 1 to No. 255	-

■Point table (acceleration time constant) ([MELSERVO-J4-*A-RJ])

Use an appropriate device according to the write destination of the servo amplifier.

- ACT1 to ACT255: Writing data to the RAM of a servo amplifier.
- ACT1001 to ACT1255: Writing data to the EEPROM of a servo amplifier.

Virtual device name	Name	Symbol
ACT1 to ACT255, ACT1001 to ACT1255	Point table/acceleration time constant No. 1 to No. 255	-

■Point table (deceleration time constant) ([MELSERVO-J4-*A-RJ])

Use an appropriate device according to the write destination of the servo amplifier.

- DCT1 to DCT255: Writing data to the RAM of a servo amplifier.
- DCT1001 to DCT1255: Writing data to the EEPROM of a servo amplifier.

Virtual device name	Name	Symbol
DCT1 to DCT255, DCT1001 to DCT1255	Point table/deceleration time constant No. 1 to No. 255	-

■Point table (dwell) ([MELSERVO-J4-*A-RJ])

Use an appropriate device according to the write destination of the servo amplifier.

- DWL1 to DWL255: Writing data to the RAM of a servo amplifier.
- DWL1001 to DWL1255: Writing data to the EEPROM of a servo amplifier.

Virtual device name	Name	Symbol
DWL1 to DWL255, DWL1001 to DWL1255	Point table/dwell No. 1 to No. 255	-

■Point table (auxiliary function) ([MELSERVO-J4-*A-RJ])

Use an appropriate device according to the write destination of the servo amplifier.

- AUX1 to AUX255: Writing data to the RAM of a servo amplifier.
- AUX1001 to AUX1255: Writing data to the EEPROM of a servo amplifier.

Virtual device name	Name	Symbol
AUX1 to AUX255, AUX1001 to AUX1255	Point table/auxiliary function No. 1 to No. 255	-

■Point table (M code) ([MELSERVO-J4-*A-RJ])

Use an appropriate device according to the write destination of the servo amplifier.

- MCD1 to MCD255: Writing data to the RAM of a servo amplifier.
- MCD1001 to MCD1255: Writing data to the EEPROM of a servo amplifier.

Virtual device name	Name	Symbol
MCD1 to MCD255, MCD1001 to MCD1255	Point table/M code No.1 to No.255	-

■Machine diagnosis data ([MELSERVO-J4-*A-RJ])

Virtual device name	Name	Symbol
MD0	Machine diagnosis data, station number	-
MD1	Machine diagnosis data shift judgment(test mode)	-
MD2	Machine diagnosis data status	-
MD3	Machine diagnosis data coulomb friction torque in positive direction	-
MD4	Machine diagnosis data friction torque at rated speed in positive direction	-
MD5	Machine diagnosis data coulomb friction torque in negative direction	-
MD6	Machine diagnosis data friction torque at rated speed in negative direction	-
MD7	Machine diagnosis data oscillation frequency(motor is stopped)	-
MD8	Machine diagnosis data vibration level(motor is stopped)	-
MD9	Machine diagnosis data oscillation frequency(motor is operating)	-
MD10	Machine diagnosis data vibration level(motor is operating)	-
MD11	Machine diagnosis data, rated speed at forward or reverse rotation torque	-

■One-touch tuning data ([MELSERVO-J4-*A-RJ])

Virtual device name	Name	Symbol
OTS0	One-touch tuning status confirmation	-
OTS1	Error code list	-
OTS2	Settling time	-
OTS3	Overshoot amount	-

■External input signal ([MELSERVO-J4-*A-RJ])

Virtual device name	Name	Symbol	Data to be read from the servo amplifier
DI0	Input device statuses	-	For the mapping of the bits corresponding to the data to be read, refer to the following. MR-J4-_A_(-RJ)/MR-J4-03A6(-RJ) SERVO AMPLIFIER INSTRUCTION MANUAL
DI3	External input pin statuses	-	
DI4	Statuses of input devices switched on through communication	-	For the mapping of the bits corresponding to the data to be read or written, refer to the following. MR-J4-_A_(-RJ)/MR-J4-03A6(-RJ) SERVO AMPLIFIER INSTRUCTION MANUAL

■External output signal ([MELSERVO-J4-*A-RJ])

Virtual device name	Name	Symbol	Data to be read from the servo amplifier
DO0	Output device statuses	-	For the mapping of the bits corresponding to the data to be read, refer to the following. MR-J4-_A_(-RJ)/MR-J4-03sA6(-RJ) SERVO AMPLIFIER INSTRUCTION MANUAL
DO4	External output pin statuses	-	

■Current position latch data ([MELSERVO-J4-*A-RJ])

Virtual device name	Name	Symbol
LD0	Position data unit	-
LD1	Current position latch data	-

A

■Value of the general-purpose register (Rx) ([MELSERVO-J4-*A-RJ])

Use an appropriate device according to the write destination of the servo amplifier.

- RR1 to RR4: Writing data to the RAM of a servo amplifier.
- RR1001 to RR1004: Writing data to the EEPROM of a servo amplifier.

Virtual device name	Name	Symbol
RR1, RR1001	Value of the general-purpose register (R1)	-
RR2, RR1002	Value of the general-purpose register (R2)	-
RR3, RR1003	Value of the general-purpose register (R3)	-
RR4, RR1004	Value of the general-purpose register (R4)	-

■Value of the general-purpose register (Dx) ([MELSERVO-J4-*A-RJ])

Virtual device name	Name	Symbol
RD1	Value of the general-purpose register (D1)	-
RD2	Value of the general-purpose register (D2)	-
RD3	Value of the general-purpose register (D3)	-
RD4	Value of the general-purpose register (D4)	-

■Life diagnosis ([MELSERVO-J4-*A-RJ])

Virtual device name	Name	Symbol
ALD0	Cumulative power-on time	-
ALD1	Number of inrush current switching times	-

■Input signal for test operation (for test operation) ([MELSERVO-J4-*A-RJ])

Virtual device name	Name	Symbol
TMI0	Input signal for test operation 1	-
TMI1	Input signal for test operation 2	-
TMI2	Input signal for test operation 3	-

When using the input signal for test operation (for test operation), note the following.

Precautions	Description
Writing a value to a virtual device using an object	Numerical input cannot be used. Use a word switch for writing.

■Forced output of signal pin (for test operation) ([MELSERVO-J4-*A-RJ])

Virtual device name	Name	Symbol
TMO0	Forced output of signal pin	-

When using the forced output of signal pin (for test operation), note the following.

Precautions	Description
Writing a value to a virtual device using an object	Numerical input cannot be used. Use a word switch for writing.

■Set data (for test operation) ([MELSERVO-J4-*A-RJ])

Virtual device name	Name	Symbol
TMD0	Writes the speed (test mode)	-
TMD1	Writes the acceleration/deceleration time constant (test mode)	-
TMD3	Writes the moving distance (test mode)	-

When using the set data (for test operation), note the following.

Precautions	Description
Writing a value to a virtual device using an object	Numerical input cannot be used. Use a word switch for writing.

Precautions for virtual servo amplifier devices ([MELSERVO-J4-*A-RJ])

For the precautions for virtual servo amplifier devices, refer to the following.

☞ Page 1555 Precautions for virtual servo amplifier devices ([MELSERVO-J2M-P8A])

[MELSERVO-JE-*C]

GT 27 GT 25 GT 23 GT 21 GS 25 GS 21

Item	Reference
Specifications of bit devices	☞ Page 1655 Monitoring-supported bit devices ([MELSERVO-JE-*C])
	☞ Page 1655 Availability of writing/reading data to/from bit devices ([MELSERVO-JE-*C])
Specifications of word devices	☞ Page 1656 Monitoring-supported word devices ([MELSERVO-JE-*C])
	☞ Page 1657 Availability of writing/reading data to/from word devices ([MELSERVO-JE-*C])
Specifications of double-word devices	☞ Page 1657 Monitoring-supported double-word devices ([MELSERVO-JE-*C])
	☞ Page 1658 Availability of writing/reading data to/from double-word devices ([MELSERVO-JE-*C])
Specifications of virtual servo amplifier devices	☞ Page 1658 Virtual servo amplifier devices ([MELSERVO-JE-*C])
	☞ Page 1672 Precautions for virtual servo amplifier devices ([MELSERVO-JE-*C])

Monitoring-supported bit devices ([MELSERVO-JE-*C])

The following table shows monitoring-supported virtual bit devices for servo amplifiers.

To check whether writing/reading data to/from each device is available, refer to the following.

☞ Page 1655 Availability of writing/reading data to/from bit devices ([MELSERVO-JE-*C])

For details on virtual servo amplifier devices, refer to the following.

☞ Page 1658 Virtual servo amplifier devices ([MELSERVO-JE-*C])

○: Available

×: Not available

Device name		Device No. representation	Setting range	Specifications of EG devices*1	
				Assignment to EG devices	Access using a client
SP	Servo amplifier request	Decimal	0 to 6	×	×
OM	Operation mode selection	Decimal	0 to 2 4 to 5	×	×
TMB	Instruction demand (for test operation)	Decimal	1 to 6	×	×
OTI	One-touch tuning instruction	Decimal	0 to 5	×	×

*1 For the devices assigned to EG devices (gateway devices) and the compatible clients, refer to the following.
📖GT Designer3 (GOT2000) Screen Design Manual

Availability of writing/reading data to/from bit devices ([MELSERVO-JE-*C])

The following shows whether writing/reading data to/from bit devices is available by device type.

When the device type is other than the bit type, set the device No. in multiples of 16.

R/W: Both read and write

R/-: Read only

-/W: Write only

-/-: No read/write access

Device name	Device type				
	Bit	Byte (8 bits)	Word (16 bits)	Double-word (32 bits)	Quad-word (64 bits)
SP	-/W	-/-	-/-	-/-	-/-
OM	-/W	-/-	-/-	-/-	-/-
TMB	-/W	-/-	-/-	-/-	-/-
OTI	-/W	-/-	-/-	-/-	-/-

A

Monitoring-supported word devices ([MELSERVO-JE-*C])

The following table shows monitoring-supported virtual word devices for servo amplifiers.

To check whether writing/reading data to/from each device is available, refer to the following.

☞ Page 1657 Availability of writing/reading data to/from word devices ([MELSERVO-JE-*C])

For details on virtual servo amplifier devices, refer to the following.

☞ Page 1658 Virtual servo amplifier devices ([MELSERVO-JE-*C])

○: Available

×: Not available

Device name		Device No. representation	Setting range	Specifications of EG devices*1	
				Assignment to EG devices	Access using a client
PA	Basic setting parameter	Decimal	1 to 32 1001 to 1032	○	×
PB	Gain filter parameter	Decimal	1 to 64 1001 to 1064	○	×
PC	Extension setting parameter	Decimal	1 to 80 1001 to 1080	○	×
PD	I/O setting parameter	Decimal	1 to 48 1001 to 1048	○	×
PT	Positioning control parameter	Decimal	1 to 80 1001 to 1080	○	×
PN	Network setting parameter	Decimal	1 to 48 1001 to 1048	×	×
ST	Status display	Decimal	0 to 48	○	×
PE	Extension setting No.2 parameter	Decimal	1 to 64 1001 to 1064	○	×
PF	Extension setting No.3 parameter	Decimal	1 to 48 1001 to 1048	○	×
ALM	Alarm (Current alarm)	Decimal	0 to 1 11 to 59	○	×
ALM	Alarm (Alarm history)	Decimal	200 to 215 220 to 235 240 to 255	○	×
MD	Machine diagnosis data	Decimal	0 to 11	×	×
OTS	One-touch tuning data	Decimal	0 to 3	×	×
DI	External input signal	Decimal	0 to 6	×	×
DO	External output signal	Decimal	0 to 4	×	×

*1 For the devices assigned to EG devices (gateway devices) and the compatible clients, refer to the following.
📖GT Designer3 (GOT2000) Screen Design Manual

Availability of writing/reading data to/from word devices ([MELSERVO-JE-*C])

The following shows the availability of writing/reading data to/from word devices by device type.

R/W: Both read and write

R/-: Read only

-/W: Write only

-/-: No read/write access

Device name	Device type			
	Word (16 bits)	Double-word (32 bits)	Quad-word (64 bits)	Bit of word data
PA	R/W	R/W	-/-	-/-
PB	R/W	R/W	-/-	-/-
PC	R/W	R/W	-/-	-/-
PD	R/W	R/W	-/-	-/-
PT	R/W	R/W	-/-	-/-
PN	R/W	R/W	-/-	-/-
ST	R/-	R/-	-/-	-/-
PE	R/W	R/W	-/-	-/-
PF	R/W	R/W	-/-	-/-
ALM	R/-	R/-	-/-	-/-
MD	R/-	R/-	-/-	-/-
OTS	R/-	R/-	-/-	-/-
DI*1	R/-	R/W	-/-	-/-
DO	R/-	R/-	-/-	-/-

*1 Only reading is available for DI0 to DI3.

Monitoring-supported double-word devices ([MELSERVO-JE-*C])

The following table shows monitoring-supported virtual double-word devices for servo amplifiers.

To check whether writing/reading data to/from each device is available, refer to the following.

☞ Page 1658 Availability of writing/reading data to/from double-word devices ([MELSERVO-JE-*C])

For details on virtual servo amplifier devices, refer to the following.

☞ Page 1658 Virtual servo amplifier devices ([MELSERVO-JE-*C])

○: Available

×: Not available

Device name		Device No. representation	Setting range	Specifications of EG devices*1	
				Assignment to EG devices	Access using a client
LD	Current position latch data	Decimal	0 to 1	×	×
RR	Value of the general-purpose register (Rx)	Decimal	1 to 4 1001 to 1004	×	×
RD	Value of the general-purpose register (Dx)	Decimal	1 to 4	×	×
ALD	Life diagnosis	Decimal	0 to 1	×	×
TMI	Input signal for test operation (for test operation)	Decimal	0 to 2	×	×
TMO	Forced output of signal pin (for test operation)	Decimal	0	×	×
TMD	Set data (for test operation)	Decimal	0 to 1, 3	×	×

*1 For the devices assigned to EG devices (gateway devices) and the compatible clients, refer to the following.
📖GT Designer3 (GOT2000) Screen Design Manual

Availability of writing/reading data to/from double-word devices ([MELSERVO-JE-*C])

The following shows the availability of writing/reading data to/from double-word devices by device type.

R/W: Both read and write

R/-: Read only

-/W: Write only

-/-: No read/write access

Device name	Device type			
	Word (16 bits)	Double-word (32 bits)	Quad-word (64 bits)	Bit of double-word data
LD	-/-	R/-	-/-	-/-
RR	-/-	R/W	-/-	-/-
RD	-/-	R/W	-/-	-/-
ALD	-/-	R/-	-/-	-/-
TMI	-/-	-/W	-/-	-/-
TMO	-/-	-/W	-/-	-/-
TMD	-/-	-/W	-/-	-/-

Virtual servo amplifier devices ([MELSERVO-JE-*C])

The following shows the correspondence between the virtual devices used in the GOT and the servo amplifier data.

Virtual device name	Reference
SP	☞ Page 1659 Servo amplifier request ([MELSERVO-JE-*C])
OM	☞ Page 1659 Operation mode selection ([MELSERVO-JE-*C])
TMB	☞ Page 1659 Instruction demand (for test operation) ([MELSERVO-JE-*C])
OTI	☞ Page 1659 One-touch tuning instruction ([MELSERVO-JE-*C])
PA	☞ Page 1660 Basic parameter ([MELSERVO-JE-*C])
PB	☞ Page 1660 Gain filter parameter ([MELSERVO-JE-*C])
PC	☞ Page 1662 Extension setting parameter ([MELSERVO-JE-*C])
PD	☞ Page 1664 I/O setting parameter ([MELSERVO-JE-*C])
PT	☞ Page 1665 Positioning control parameter ([MELSERVO-JE-*C])
PN	☞ Page 1666 Network setting parameter ([MELSERVO-JE-*C])
ST	☞ Page 1667 Status display ([MELSERVO-JE-*C])
PE	☞ Page 1667 Extension setting No.2 parameter ([MELSERVO-JE-*C])
PF	☞ Page 1668 Extension setting No.3 parameter ([MELSERVO-JE-*C])
ALM	☞ Page 1668 Alarm (MELSERVO-J4-*A extended) ([MELSERVO-JE-*C])
MD	☞ Page 1670 Machine diagnosis data ([MELSERVO-JE-*C])
OTS	☞ Page 1670 One-touch tuning data ([MELSERVO-JE-*C])
DI	☞ Page 1670 External input signal ([MELSERVO-JE-*C])
DO	☞ Page 1670 External output signal ([MELSERVO-JE-*C])
LD	☞ Page 1671 Current position latch data ([MELSERVO-JE-*C])
RR	☞ Page 1671 Value of the general-purpose register (Rx) ([MELSERVO-JE-*C])
RD	☞ Page 1671 Value of the general-purpose register (Dx) ([MELSERVO-JE-*C])
ALD	☞ Page 1671 Life diagnosis ([MELSERVO-JE-*C])
TMI	☞ Page 1671 Input signal for test operation (for test operation) ([MELSERVO-JE-*C])
TMO	☞ Page 1671 Forced output of signal pin (for test operation) ([MELSERVO-JE-*C])
TMD	☞ Page 1672 Set data (for test operation) ([MELSERVO-JE-*C])

■Servo amplifier request ([MELSERVO-JE-*C])

Virtual device name	Name	Symbol
SP0	Status display data clear	-
SP1	Current alarm clear	-
SP2	Alarm history clear	-
SP3	External input signal prohibited	-
SP4	External output signal prohibited	-
SP5	External input signal resumed	-
SP6	External output signal resumed	-

When using the servo amplifier request, note the following.

Precautions	Description
When setting a device for a bit switch.	Do not select [Alternate] for [Switch Action] of the bit switch.

■Operation mode selection ([MELSERVO-JE-*C])

Virtual device name	Name	Symbol
OM0	Normal mode (not test operation mode)	-
OM1	JOG operation	-
OM2	Positioning operation	-
OM4	Output signal (DO) forced output	-
OM5	Single-step feed operation	-

When using the operation mode selection, note the following.

Precautions	Description
When setting a device for a bit switch.	Do not select [Alternate] for [Switch Action] of the bit switch.

■Instruction demand (for test operation) ([MELSERVO-JE-*C])

Virtual device name	Name	Symbol
TMB1	Temporary stop command	-
TMB2	Test operation (positioning operation) start command	-
TMB3	Forward rotation direction	-
TMB4	Reverse rotation direction	-
TMB5	Restart for remaining distance	-
TMB6	Remaining distance clear	-

When using the instruction demand (for test operation), note the following.

Precautions	Description
When setting a device for a bit switch.	Do not select [Alternate] for [Switch Action] of the bit switch.

■One-touch tuning instruction ([MELSERVO-JE-*C])

Virtual device name	Name	Symbol
OTI0	One-touch tuning start command (Basic mode)	-
OTI1	One-touch tuning start command (High mode)	-
OTI2	One-touch tuning start command (Low mode)	-
OTI3	One-touch tuning stop command	-
OTI4	Return to initial value	-
OTI5	Return to value before adjustment	-

■Basic parameter ([MELSERVO-JE-*C])

Use an appropriate device according to the write destination of the servo amplifier.

- PA1 to PA32: Writing data to the RAM of a servo amplifier.
- PA1001 to PA1032: Writing data to the EEPROM of a servo amplifier.

For the parameters prefixed by an asterisk (*), setting becomes effective when the power is turned off once and back on after setting the parameter data.

Device name	Name	Symbol
PA1, PA1001	Operation mode	*STY
PA2, PA1002	Regenerative brake option	*REG
PA3, PA1003	Absolute position detection system	*ABS
PA4, PA1004	Function selection A-1	*AOP1
PA5, PA1005	Number of command input pulses per revolution	*FBP
PA6, PA1006	Electronic gear numerator	CMX
PA7, PA1007	Electronic gear denominator	CDV
PA8, PA1008	Auto tuning mode	ATU
PA9, PA1009	Auto tuning response	RSP
PA10, PA1010	In-position range	INP
PA11, PA1011	Forward rotation torque limit	TLP
PA12, PA1012	Reverse rotation torque limit	TLN
PA13, PA1013	Command pulse input form	*PLSS
PA14, PA1014	Rotation direction selection	*POL
PA15, PA1015	Encoder output pulses	*ENR
PA16, PA1016	Encoder output pulses 2	*ENR2
PA17 to PA18, PA1017 to PA1018	For manufacturer setting	-
PA19, PA1019	Parameter block	*BLK
PA20, PA1020	Tough drive setting	*TDS
PA21, PA1021	Function selection A-3	*AOP3
PA22, PA1022	For manufacturer setting	-
PA23, PA1023	Drive recorder arbitrary alarm trigger setting	DRAT
PA24, PA1024	Function selection A-4	*AOP4
PA25, PA1025	One-touch tuning - Overshoot permissible level	OTHOV
PA26, PA1026	Function selection A-5	*AOP5
PA27, PA1027	For manufacturer setting	-
PA28, PA1028	Function selection A-6	*AOP6
PA29 to PA32, PA1029 to PA1032	For manufacturer setting	-

■Gain filter parameter ([MELSERVO-JE-*C])

Use an appropriate device according to the write destination of the servo amplifier.

- PB1 to PB64: Writing data to the RAM of a servo amplifier.
- PB1001 to PB1064: Writing data to the EEPROM of a servo amplifier.

For the parameters prefixed by an asterisk (*), setting becomes effective when the power is turned off once and back on after setting the parameter data.

Device name	Name	Symbol
PB1, PB1001	Adaptive tuning mode (Adaptive filter II)	FILT
PB2, PB1002	Vibration suppression control tuning mode (advanced vibration suppression control II)	VRFT
PB3, PB1003	Position command acceleration/deceleration time constant (position smoothing)	PST
PB4, PB1004	Feed forward gain	FFC
PB5, PB1005	For manufacturer setting	-
PB6, PB1006	Load inertia moment ratio	GD2
PB7, PB1007	Model control gain	PG1
PB8, PB1008	Position control gain	PG2
PB9, PB1009	Speed control gain	VG2

Device name	Name	Symbol
PB10, PB1010	Speed integral compensation	VIC
PB11, PB1011	Speed differential compensation	VDC
PB12, PB1012	Overshoot amount compensation	OVA
PB13, PB1013	Machine resonance suppression filter 1	NH1
PB14, PB1014	Notch shape selection 1	NHQ1
PB15, PB1015	Machine resonance suppression filter 2	NH2
PB16, PB1016	Notch shape selection 2	NHQ2
PB17, PB1017	Shaft resonance suppression filter	NHF
PB18, PB1018	Low-pass filter setting	LPF
PB19, PB1019	Vibration suppression control 1 - Vibration frequency	VRF11
PB20, PB1020	Vibration suppression control 1 - Resonance frequency	VRF12
PB21, PB1021	Vibration suppression control 1 - Vibration frequency damping	VRF13
PB22, PB1022	Vibration suppression control 1 - Resonance frequency damping	VRF14
PB23, PB1023	Low-pass filter setting	VFBF
PB24, PB1024	Slight vibration suppression control	*MVS
PB25, PB1025	Function selection B-1	*BOP1
PB26, PB1026	Gain switching function	*CDP
PB27, PB1027	Gain switching condition	CDL
PB28, PB1028	Gain switching time constant	CDT
PB29, PB1029	Load to motor inertia ratio after gain switching	GD2B
PB30, PB1030	Position loop gain after gain switching	PG2B
PB31, PB1031	Speed loop gain after gain switching	VG2B
PB32, PB1032	Speed integral compensation after gain switching	VICB
PB33, PB1033	Vibration suppression control 1 - Vibration frequency after gain switching	VRF1B
PB34, PB1034	Vibration suppression control 1 - Resonance frequency after gain switching	VRF2B
PB35, PB1035	Vibration suppression control 1 - Vibration frequency damping after gain switching	VRF3B
PB36, PB1036	Vibration suppression control 1 - Resonance frequency damping after gain switching	VRF4B
PB37 to PB44, PB1037 to PB1044	For manufacturer setting	-
PB45, PB1045	Command notch filter	CNHF
PB46, PB1046	Machine resonance suppression filter 3	NH3
PB47, PB1047	Notch shape selection 3	NHQ3
PB48, PB1048	Machine resonance suppression filter 4	NH4
PB49, PB1049	Notch shape selection 4	NHQ4
PB50, PB1050	Machine resonance suppression filter 5	NH5
PB51, PB1051	Notch shape selection 5	NHQ5
PB52, PB1052	Vibration suppression control 2 - Vibration frequency	VRF21
PB53, PB1053	Vibration suppression control 2 - Resonance frequency	VRF22
PB54, PB1054	Vibration suppression control 2 - Vibration frequency damping	VRF23
PB55, PB1055	Vibration suppression control 2 - Resonance frequency damping	VRF24
PB56, PB1056	Vibration suppression control 2 - Vibration frequency after gain switching	VRF21B
PB57, PB1057	Vibration suppression control 2 - Resonance frequency after gain switching	VRF22B
PB58, PB1058	Vibration suppression control 2 - Vibration frequency damping after gain switching	VRF23B
PB59, PB1059	Vibration suppression control 2 - Resonance frequency damping after gain switching	VRF24B
PB60, PB1060	Model loop gain after gain switching	PG1B
PB61 to PB64, PB1061 to PB1064	For manufacturer setting	-

■Extension setting parameter ([MELSERVO-JE-*C])

Use an appropriate device according to the write destination of the servo amplifier.

- PC1 to PC80: Writing data to the RAM of a servo amplifier.
- PC1001 to PC1080: Writing data to the EEPROM of a servo amplifier.

For the parameters prefixed by an asterisk (*), setting becomes effective when the power is turned off once and back on after setting the parameter data.

Device name	Name	Symbol
PC1, PC1001	Acceleration time constant	STA
PC2, PC1002	Deceleration time constant	STB
PC3, PC1003	S-pattern acceleration/deceleration time constant	STC
PC4, PC1004	Torque command time constant	TQC
PC5, PC1005	Internal speed command 1	SC1
PC6, PC1006	Internal speed command 2	SC2
PC7, PC1007	Internal speed command 3	SC3
PC8, PC1008	Internal speed command 4	SC4
PC9, PC1009	Internal speed command 5	SC5
PC10, PC1010	Internal speed command 6	SC6
PC11, PC1011	Internal speed command 7	SC7
PC12, PC1012	Analog speed command maximum speed	VCM
PC13, PC1013	Analog torque command maximum output	TLC
PC14 to PC15, PC1014 to PC1015	For manufacturer setting	-
PC16, PC1016	Electromagnetic brake sequence output	MBR
PC17, PC1017	Zero speed	ZSP
PC18, PC1018	Alarm history clear	*BPS
PC19, PC1019	Encoder output pulse selection	*ENRS
PC20 to PC21, PC1020 to PC1021	For manufacturer setting	-
PC22, PC1022	Function selection C-1	*COP1
PC23, PC1023	Function selection C-2	*COP2
PC24, PC1024	Function selection C-3	*COP3
PC25, PC1025	Function selection C-4	*COP3
PC26, PC1026	Function selection C-5	*COP5
PC27, PC1027	Function selection C-6	*COP6
PC28, PC1028	For manufacturer setting	-
PC29, PC1029	Function selection C-8	*COP7
PC30, PC1030	Acceleration time constant 2	STA2
PC31, PC1031	Deceleration time constant 2	STB2
PC32, PC1032	Command input pulse multiplication numerator 2	CMX2
PC33, PC1033	Command input pulse multiplication numerator 3	CMX3
PC34, PC1034	Command input pulse multiplication numerator 4	CMX4
PC35, PC1035	Internal torque limit 2	TL2
PC36, PC1036	For manufacturer setting	-
PC37, PC1037	Analog speed command offset	VCO
PC38, PC1038	Analog torque command offset	TPO
PC39 to PC42, PC1039 to PC1042	For manufacturer setting	-
PC43, PC1043	Error excessive alarm detection level	ERZ
PC44 to PC50, PC1044 to PC1050	For manufacturer setting	-
PC51, PC1051	Forced stop deceleration time constant	RSBR
PC52 to PC53, PC1052 to PC1053	For manufacturer setting	-
PC54, PC1054	Vertical axis freefall prevention compensation amount	RSUP1

Device name	Name	Symbol
PC55 to PC59, PC1055 to PC1059	For manufacturer setting	-
PC60, PC1060	Function selection C-D	*COPD
PC61 to PC72, PC1061 to PC1072	For manufacturer setting	-
PC73, PC1073	Error excessive warning level	ERW
PC74, PC1074	For manufacturer setting	-
PC75, PC1075	Following error output level	FEWL
PC76, PC1076	Following error output level	FEWH
PC77, PC1077	Following error output filtering time	FEWF
PC78 to PC80, PC1078 to PC1080	For manufacturer setting	-

■I/O setting parameter ([MELSERVO-JE-*C])

Use an appropriate device according to the write destination of the servo amplifier.

- PD1 to PD48: Writing data to the RAM of a servo amplifier.
- PD1001 to PD1048: Writing data to the EEPROM of a servo amplifier.

For the parameters prefixed by an asterisk (*), setting becomes effective when the power is turned off once and back on after setting the parameter data.

Device name	Name	Symbol
PD1, PD1001	Input signal automatic on selection 1	*DIA1
PD2 to PD4, PD1002 to PD1004	For manufacturer setting	-
PD5, PD1005	Input device selection 1L	*DI1L
PD6, PD1006	Input device selection 1M	*DI1M
PD7, PD1007	Input device selection 1H	*DI1H
PD8, PD1008	Input device selection 2L	*DI2L
PD9, PD1009	Input device selection 2M	*DI2M
PD10, PD1010	Input device selection 2H	*DI2H
PD11, PD1011	Input device selection 3L	*DI3L
PD12, PD1012	Input device selection 3M	*DI3M
PD13, PD1013	Input device selection 3H	*DI3H
PD14, PD1014	Input device selection 4L	*DI4L
PD15, PD1015	Input device selection 4M	*DI4M
PD16, PD1016	Input device selection 4H	*DI4H
PD17, PD1017	Input device selection 5L	*DI5L
PD18, PD1018	Input device selection 5M	*DI5M
PD19, PD1019	Input device selection 5H	*DI5H
PD20 to 22, PD1020 to PD1022	For manufacturer setting	-
PD23, PD1023	Input device selection 7L	*DI7L
PD24, PD1024	Input device selection 7M	*DI7M
PD25, PD1025	Input device selection 7H	*DI7H
PD26, PD1026	Input device selection 8L	*DI8L
PD27, PD1027	Input device selection 8M	*DI8M
PD28, PD1028	Input device selection 8H	*DI8H
PD29, PD1029	Output device selection 1	*DO1
PD30, PD1030	Output device selection 2	*DO2
PD31, PD1031	Output device selection 3	*DO3
PD32, PD1032	Output device selection 4	*DO4
PD33, PD1033	For manufacturer setting	-
PD34, PD1034	Input filter setting	*DIF
PD35, PD1035	Function selection D-1	*DOP1
PD36, PD1036	For manufacturer setting	-
PD37, PD1037	Function selection D-3	*DOP3
PD38, PD1038	Function selection D-4	*DOP4
PD39, PD1039	Function selection D-5	*DOP5
PD40 to PD48, PD1040 to PD1048	For manufacturer setting	-

■Positioning control parameter ([MELSERVO-JE-*C])

Use an appropriate device according to the write destination of the servo amplifier.

- PT1 to PT80: Writing data to the RAM of a servo amplifier.
- PT1001 to PT1080: Writing data to the EEPROM of a servo amplifier.

For the parameters prefixed by an asterisk (*), setting becomes effective when the power is turned off once and back on after setting the parameter data.

Device name	Name	Symbol
PT1, PT1001	Command mode selection	*CTY
PT2, PT1002	For manufacturer setting	-
PT3, PT1003	Feeding function selection	*FTY
PT4, PT1004	For manufacturer setting	-
PT5, PT1005	Home position return speed	ZRF
PT6, PT1006	Creep speed	CRF
PT7, PT1007	Home position shift distance	ZST
PT8, PT1008	For manufacturer setting	-
PT9, PT1009	Moving distance after proximity dog	DCT
PT10, PT1010	Stopper type home position return stopper time	ZTM
PT11, PT1011	Stopper type home position return torque limit value	ZTT
PT12 to PT14, PT1012 to PT1014	For manufacturer setting	-
PT15, PT1015	Software limit +	LMPL
PT16, PT1016	Software limit +	LMPH
PT17, PT1017	Software limit -	LMNL
PT18, PT1018	Software limit -	LMNH
PT19 to 25, PT1019 to PT1025	For manufacturer setting	-
PT26, PT1026	Function selection T-2	*TOP2
PT27 to 28, PT1027 to PT1028	For manufacturer setting	-
PT29, PT1029	Function selection T-3	*TOP3
PT30 to PT40, PT1030 to PT1040	For manufacturer setting	-
PT41, PT1041	Home position return inhibit selection	ORP
PT42 to PT44, PT1042 to PT1044	For manufacturer setting	-
PT45, PT1045	Home position return method	HMM
PT46 to PT48, PT1046 to PT1048	For manufacturer setting	-
PT49, PT1049	Torque slope	TQS
PT50, PT1050	Profile speed command	PVC
PT51, PT1051	Maximum profile speed	MPVC
PT52, PT1052	Speed limit	VLMT
PT53 to 56, PT1053 to PT1056	For manufacturer setting	-
PT57, PT1057	Home position shift distance (extension parameter)	ZSTH
PT58, PT1058	For manufacturer setting	*ZPSH
PT59, PT1059	Travel distance after proximity dog (extension parameter)	DCTH
PT60, PT1060	Function selection T-8	*TOP8
PT61, PT1061	Home position return acceleration time constant	HMA
PT62, PT1062	Home position return deceleration time constant	HMB
PT63, PT1063	Zero speed 2 level	ZSP2L
PT64, PT1064	Zero speed 2 filter time	ZSP2F
PT65, PT1065	In-position 2 output range	INP2R
PT66, PT1066	In-position 2 output filter time	INP2F
PT67, PT1067	Speed reached 2 output range	SA2R
PT68, PT1068	Speed reached 2 output filter time	SA2F
PT69 to 80, PT1069 to PT1080	For manufacturer setting	-

■Network setting parameter ([MELSERVO-JE-*C])

Use an appropriate device according to the write destination of the servo amplifier.

- PN1 to PN48: Writing data to the RAM of a servo amplifier.
- PN1001 to PN1048: Writing data to the EEPROM of a servo amplifier.

For the parameters prefixed by an asterisk (*), setting becomes effective when the power is turned off once and back on after setting the parameter data.

Device name	Name	Symbol
PN1, PN1001	For manufacturer setting	-
PN2, PN1002	Communication error detection time	CERT
PN3 to PN5, PN1003 to PN1005	For manufacturer setting	-
PN6, PN1006	Function selection N-1	NOP1
PN7, PN1007	For manufacturer setting	-
PN8, PN1008	Function selection N-2	NOP2
PN9, PN1009	For manufacturer setting	-
PN10, PN1010	Ethernet communication time-out selection	EIC
PN11, PN1011	IP address setting 1	*IPAD1
PN12, PN1012	IP address setting 2	*IPAD2
PN13, PN1013	IP address setting 3	*IPAD3
PN14, PN1014	IP address setting 4	*IPAD4
PN15, PN1015	Subnet mask setting 1	*SNMK1
PN16, PN1016	Subnet mask setting 2	*SNMK2
PN17, PN1017	Subnet mask setting 3	*SNMK3
PN18, PN1018	Subnet mask setting 4	*SNMK4
PN19, PN1019	Default gateway setting 1	*DGW1
PN20, PN1020	Default gateway setting 2	*DGW2
PN21, PN1021	Default gateway setting 3	*DGW3
PN22, PN1022	Default gateway setting 4	*DGW4
PN23, PN1023	KeepAlive time	*KAA
PN24, PN1024	IP address filter 1	*IPAF1
PN25, PN1025	IP address filter 2	*IPAF2
PN26, PN1026	IP address filter 3	*IPAF3
PN27, PN1027	IP address filter 4	*IPAF4
PN28, PN1028	IP address filter 2 range specification	*IPFR2
PN29, PN1029	IP address filter 3 range specification	*IPFR3
PN30, PN1030	IP address filter 4 range specification	*IPFR4
PN31, PN1031	Operation specification IP address 1	*IPOA1
PN32, PN1032	Operation specification IP address 2	*IPOA2
PN33, PN1033	Operation specification IP address 3	*IPOA3
PN34, PN1034	Operation specification IP address 4	*IPOA4
PN35, PN1035	Operation specification IP address 3 range spec.	*IPOR3
PN36, PN1036	Operation specification IP address 4 range spec.	*IPOR4
PN37 to PN48, PN1037 to PN1048	For manufacturer setting	-

■Status display ([MELSERVO-JE-*C])

Device name	Name	Symbol
ST0	Cumulative feedback pulses	-
ST1	Servo motor speed	-
ST2	Droop pulses	-
ST3	Cumulative command pulses	-
ST4	Command pulse frequency	-
ST5	Analog speed command voltage	-
ST6	Analog torque command voltage	-
ST7	Regenerative load ratio	-
ST8	Effective load ratio	-
ST9	Peak load ratio	-
ST10	Instantaneous torque	-
ST11	Within one-revolution position	-
ST12	ABS counter	-
ST13	Load inertia moment ratio	-
ST14	Bus voltage	-
ST15 to ST31	For manufacturer setting	-
ST32	Encoder inside temperature	-
ST33	Settling time	-
ST34	Oscillation detection frequency	-
ST35	Number of tough drive operations	-
ST36 to ST39	For manufacturer setting	-
ST40	Unit power consumption	-
ST41	Unit total power consumption	-
ST42	Current position	-
ST43	Command position	-
ST44	Command remaining distance	-
ST45 to ST48	For manufacturer setting	-

■Extension setting No.2 parameter ([MELSERVO-JE-*C])

Use an appropriate device according to the write destination of the servo amplifier.

- PE1 to PE64: Writing data to the RAM of a servo amplifier.
- PE1001 to PE1064: Writing data to the EEPROM of a servo amplifier.

For the parameters prefixed by an asterisk (*), setting becomes effective when the power is turned off once and back on after setting the parameter data.

Device name	Name	Symbol
PE1 to PE40, PE1001 to PE1040	For manufacturer setting	-
PE41, PE1041	Function selection E-3	EOP3
PE42 to PE43, PE1042 to PE1043	For manufacturer setting	-
PE44, PE1044	Lost motion compensation positive-side compensation value selection	LMCP
PE45, PE1045	Lost motion compensation negative-side compensation value selection	LMCN
PE46, PE1046	Lost motion filter setting	LMFLT
PE47, PE1047	Torque offset	TOF
PE48, PE1048	Lost motion compensation function selection	*LMOP
PE49, PE1049	Lost motion compensation timing	LMCD
PE50, PE1050	Lost motion compensation non-sensitive band	LMCT
PE51 to PE64, PE1051 to PE1064	For manufacturer setting	-

■Extension setting No.3 parameter ([MELSERVO-JE-*C])

Use an appropriate device according to the write destination of the servo amplifier.

- PF1 to PF48: Writing data to the RAM of a servo amplifier.
- PF1001 to PF1048: Writing data to the EEPROM of a servo amplifier.

For the parameters prefixed by an asterisk (*), setting becomes effective when the power is turned off once and back on after setting the parameter data.

Device name	Name	Symbol
PF1 to PF8, PF1001 to PF1008	For manufacturer setting	-
PF9, PF1009	Function selection F-5	*FOP5
PF10 to PF14, PF1010 to PF1014	For manufacturer setting	-
PF15, PF1015	Electronic dynamic brake operating time	DBT
PF16 to PF20, PF1016 to PF1020	For manufacturer setting	-
PF21, PF1021	Drive recorder switching time setting	DRT
PF22, PF1022	For manufacturer setting	-
PF23, PF1023	Vibration tough drive - Oscillation detection level	OSCL1
PF24, PF1024	Vibration tough drive function selection	OSCL2
PF25, PF1025	Instantaneous power failure tough drive - Detection time	CVAT
PF26 to PF30, PF1026 to PF1030	For manufacturer setting	-
PF31, PF1031	Machine diagnosis function - Friction judgment speed	FRIC
PF32 to PF48, PF1032 to PF1048	For manufacturer setting	-

■Alarm (MELSERVO-J4-*A extended) ([MELSERVO-JE-*C])

Device name	Name	Symbol
ALM0	Current alarm number	-
ALM1	Detailed data of current alarms	-
ALM11	Servo status(alarm) Cumulative feedback pulses	-
ALM12	Servo status(alarm) Servo motor speed	-
ALM13	Servo status(alarm) Droop pulses	-
ALM14	Servo status(alarm) Cumulative command pulses	-
ALM15	Servo status(alarm) Command pulse frequency	-
ALM16	Servo status(alarm) Analog speed command voltage	-
ALM17	Servo status(alarm) Analog torque command voltage	-
ALM18	Servo status(alarm) Regenerative load ratio	-
ALM19	Servo status(alarm) Effective load ratio	-
ALM20	Servo status(alarm) Peak load ratio	-
ALM21	Servo status(alarm) Instantaneous torque	-
ALM22	Servo status(alarm) Within one-revolution position	-
ALM23	Servo status(alarm) ABS counter	-
ALM24	Servo status(alarm) Load inertia moment ratio	-
ALM25	Servo status(alarm) Bus voltage	-
ALM26 to ALM42	For manufacturer setting	-
ALM43	Servo status(alarm) Internal temperature of encoder	-
ALM44	Servo status(alarm) Settling time	-
ALM45	Servo status(alarm) Oscillation detection frequency	-
ALM46	Servo status(alarm) Number of tough drives	-
ALM47 to ALM50	For manufacturer setting	-
ALM51	Servo status(alarm) Unit power consumption	-
ALM52	Servo status(alarm) Unit total power consumption	-
ALM53	Servo status(alarm) Current position	-
ALM54	Servo status(alarm) Command position	-

Device name	Name	Symbol
ALM55	Servo status(alarm) Command remaining distance	-
ALM56 to ALM59	For manufacturer setting	-
ALM200	Alarm number from Alarm History most recent alarm	-
ALM201	Alarm number from Alarm History 1st alarm in past	-
ALM202	Alarm number from Alarm History 2nd alarm in past	-
ALM203	Alarm number from Alarm History 3rd alarm in past	-
ALM204	Alarm number from Alarm History 4th alarm in past	-
ALM205	Alarm number from Alarm History 5th alarm in past	-
ALM206	Alarm number from Alarm History 6th alarm in past	-
ALM207	Alarm number from Alarm History 7th alarm in past	-
ALM208	Alarm number from Alarm History 8th alarm in past	-
ALM209	Alarm number from Alarm History 9th alarm in past	-
ALM210	Alarm number from Alarm History 10th alarm in past	-
ALM211	Alarm number from Alarm History 11th alarm in past	-
ALM212	Alarm number from Alarm History 12th alarm in past	-
ALM213	Alarm number from Alarm History 13th alarm in past	-
ALM214	Alarm number from Alarm History 14th alarm in past	-
ALM215	Alarm number from Alarm History 15th alarm in past	-
ALM220	Alarm occurrence time in alarm history most recent alarm	-
ALM221	Alarm occurrence time in alarm history 1st alarm in past	-
ALM222	Alarm occurrence time in alarm history 2nd alarm in past	-
ALM223	Alarm occurrence time in alarm history 3rd alarm in past	-
ALM224	Alarm occurrence time in alarm history 4th alarm in past	-
ALM225	Alarm occurrence time in alarm history 5th alarm in past	-
ALM226	Alarm occurrence time in alarm history 6th alarm in past	-
ALM227	Alarm occurrence time in alarm history 7th alarm in past	-
ALM228	Alarm occurrence time in alarm history 8th alarm in past	-
ALM229	Alarm occurrence time in alarm history 9th alarm in past	-
ALM230	Alarm occurrence time in alarm history 10th alarm in past	-
ALM231	Alarm occurrence time in alarm history 11th alarm in past	-
ALM232	Alarm occurrence time in alarm history 12th alarm in past	-
ALM233	Alarm occurrence time in alarm history 13th alarm in past	-
ALM234	Alarm occurrence time in alarm history 14th alarm in past	-
ALM235	Alarm occurrence time in alarm history 15th alarm in past	-
ALM240	Detailed alarm from Alarm History most recent alarm	-
ALM241	Detailed alarm from Alarm History 1st alarm in past	-
ALM242	Detailed alarm from Alarm History 2nd alarm in past	-
ALM243	Detailed alarm from Alarm History 3rd alarm in past	-
ALM244	Detailed alarm from Alarm History 4th alarm in past	-
ALM245	Detailed alarm from Alarm History 5th alarm in past	-
ALM246	Detailed alarm from Alarm History 6th alarm in past	-
ALM247	Detailed alarm from Alarm History 7th alarm in past	-
ALM248	Detailed alarm from Alarm History 8th alarm in past	-
ALM249	Detailed alarm from Alarm History 9th alarm in past	-
ALM250	Detailed alarm from Alarm History 10th alarm in past	-
ALM251	Detailed alarm from Alarm History 11th alarm in past	-
ALM252	Detailed alarm from Alarm History 12th alarm in past	-
ALM253	Detailed alarm from Alarm History 13th alarm in past	-
ALM254	Detailed alarm from Alarm History 14th alarm in past	-
ALM255	Detailed alarm from Alarm History 15th alarm in past	-

■Machine diagnosis data ([MELSERVO-JE-*C])

Virtual device name	Name	Symbol
MD0	Machine diagnosis data parameter number	-
MD1	Machine diagnosis data shift judgment(test mode)	-
MD2*1	Machine diagnosis data status	-
MD3*2	Machine diagnosis data coulomb friction torque in positive direction	-
MD4*2	Machine diagnosis data friction torque at rated speed in positive direction	-
MD5*2	Machine diagnosis data coulomb friction torque in negative direction	-
MD6*2	Machine diagnosis data friction torque at rated speed in negative direction	-
MD7*2	Machine diagnosis data oscillation frequency(motor is stopped)	-
MD8*2	Machine diagnosis data vibration level(motor is stopped)	-
MD9*2	Machine diagnosis data oscillation frequency(motor is operating)	-
MD10*2	Machine diagnosis data vibration level(motor is operating)	-
MD11	Machine diagnosis data, rated speed at forward or reverse rotation torque	-

*1 While the servo amplifier is estimating the corresponding machine status in the machine diagnosis, do not write data to the parameters of the servo amplifier from another GOT.
Doing so may cause the servo amplifier to malfunction.

*2 When MD2 indicates that the servo amplifier does not complete the machine diagnosis (is estimating or warning of the machine status), do not monitor MD3 to MD6 (friction states) and MD7 to MD10 (vibration/oscillation states).
To start monitoring those devices upon the estimation completion, set [Trigger] in the applicable object settings.

■One-touch tuning data ([MELSERVO-JE-*C])

Virtual device name	Name	Symbol
OTS0	One-touch tuning status confirmation	-
OTS1	Error code list	-
OTS2	Settling time	-
OTS3	Overshoot amount	-

■External input signal ([MELSERVO-JE-*C])

Virtual device name	Name	Symbol	Data to be read from the servo amplifier
DI0	Input device statuses	-	System information
DI1	Input device statuses	-	
DI2	Input device statuses	-	
DI3	External input pin statuses	-	The statuses of the listed input devices are assigned to the bits in order from bit 0 and read. For details on the input devices, refer to the following. MR-JE-_C SERVO AMPLIFIER INSTRUCTION MANUAL
DI4	Statuses of input devices switched on through communication	-	System information
DI5	Statuses of input devices switched on through communication	-	
DI6	Statuses of input devices switched on through communication	-	

■External output signal ([MELSERVO-JE-*C])

Virtual device name	Name	Symbol	Data to be read from the servo amplifier
DO0	Output device statuses	-	System information
DO1	Output device statuses	-	
DO2	Output device statuses	-	
DO4	External output pin statuses	-	The statuses of the listed output devices are assigned to the bits in order from bit 0 and read. For details on the output devices, refer to the following. MR-JE-_C SERVO AMPLIFIER INSTRUCTION MANUAL

■Current position latch data ([MELSERVO-JE-*C])

Virtual device name	Name	Symbol
LD0	Position data unit	-
LD1	Current position latch data	-

■Value of the general-purpose register (Rx) ([MELSERVO-JE-*C])

Use an appropriate device according to the write destination of the servo amplifier.

- RR1 to RR4: Writing data to the RAM of a servo amplifier.
- RR1001 to RR1004: Writing data to the EEPROM of a servo amplifier.

Virtual device name	Name	Symbol
RR1, RR1001	Value of the general-purpose register (R1)	-
RR2, RR1002	Value of the general-purpose register (R2)	-
RR3, RR1003	Value of the general-purpose register (R3)	-
RR4, RR1004	Value of the general-purpose register (R4)	-

■Value of the general-purpose register (Dx) ([MELSERVO-JE-*C])

Virtual device name	Name	Symbol
RD1	Value of the general-purpose register (D1)	-
RD2	Value of the general-purpose register (D2)	-
RD3	Value of the general-purpose register (D3)	-
RD4	Value of the general-purpose register (D4)	-

■Life diagnosis ([MELSERVO-JE-*C])

Virtual device name	Name	Symbol
ALD0	Cumulative power-on time	-
ALD1	Number of inrush current switching times	-

■Input signal for test operation (for test operation) ([MELSERVO-JE-*C])

Virtual device name	Name	Symbol
TMI0	Input signal for test operation 1	-
TMI1	Input signal for test operation 2	-
TMI2	Input signal for test operation 3	-

When using the input signal for test operation (for test operation), note the following.

Precautions	Description
Writing a value to a virtual device using an object	Numerical input cannot be used. Use a word switch for writing.

■Forced output of signal pin (for test operation) ([MELSERVO-JE-*C])

Virtual device name	Name	Symbol
TMO0	Forced output of signal pin	-

When using the forced output of signal pin (for test operation), note the following.

Precautions	Description
Writing a value to a virtual device using an object	Numerical input cannot be used. Use a word switch for writing.

■Set data (for test operation) ([MELSERVO-JE-*C])

Virtual device name	Name	Symbol
TMD0	Writes the speed (test mode)	-
TMD1	Writes the acceleration/deceleration time constant (test mode)	-
TMD3	Writes the moving distance (test mode)	-

When using the set data (for test operation), note the following.

Precautions	Description
Writing a value to a virtual device using an object	Numerical input cannot be used. Use a word switch for writing.

Precautions for virtual servo amplifier devices ([MELSERVO-JE-*C])

For the precautions for virtual servo amplifier devices, refer to the following.

☞ Page 1468 Precautions for virtual servo amplifier devices ([MELSEC iQ-R, RnMT/NC/RT, CR800-D], [MELSEC iQ-R, RnMT/RT, CR800-D])

[MELSERVO-J5(W)-*G(-RJ), -JET-*G]

GT27 GT25 GT23 GT21 GS25 GS21

Not available to GT2105-Q.

Item	Reference
Specifications of bit devices	☞ Page 1673 Monitoring-supported bit devices ([MELSERVO-J5(W)-*G(-RJ), -JET-*G])
	☞ Page 1674 Availability of writing/reading data to/from bit devices ([MELSERVO-J5(W)-*G(-RJ), -JET-*G])
Specifications of word devices	☞ Page 1674 Monitoring-supported word devices ([MELSERVO-J5(W)-*G(-RJ), -JET-*G])
	☞ Page 1678 Availability of writing/reading data to/from word devices ([MELSERVO-J5(W)-*G(-RJ), -JET-*G])
Specifications of double-word devices	☞ Page 1679 Monitoring-supported double-word devices ([MELSERVO-J5(W)-*G(-RJ), -JET-*G])
	☞ Page 1679 Availability of writing/reading data to/from double-word devices ([MELSERVO-J5(W)-*G(-RJ), -JET-*G])
Specifications of virtual servo amplifier devices	☞ Page 1680 Virtual servo amplifier devices ([MELSERVO-J5(W)-*G(-RJ), -JET-*G])
	☞ Page 1707 Precautions for virtual servo amplifier devices ([MELSERVO-J5(W)-*G(-RJ), -JET-*G])

Monitoring-supported bit devices ([MELSERVO-J5(W)-*G(-RJ), -JET-*G])

The following table shows monitoring-supported virtual bit devices for servo amplifiers.

To check whether writing/reading data to/from each device is available, refer to the following.

☞ Page 1674 Availability of writing/reading data to/from bit devices ([MELSERVO-J5(W)-*G(-RJ), -JET-*G])

For details on virtual servo amplifier devices, refer to the following.

☞ Page 1680 Virtual servo amplifier devices ([MELSERVO-J5(W)-*G(-RJ), -JET-*G])

○: Available

×: Not available

Device name		Device No. representation	Setting range	Specifications of EG devices*1	
				Assignment to EG devices	Access using a client
SP	Servo amplifier request	Decimal	AA(Axis designation)-SP(Device) Notation example: AA3-SP0 • Axis designation: 1 to 3 (direct), 100 to 115 (indirect) • Device (decimal): 0 to 6	×	×
OM	Operation mode selection	Decimal	AA(Axis designation)-OM(Device) Notation example: AA3-OM0 • Axis designation: 1 to 3 (direct), 100 to 115 (indirect) • Device (decimal): 0 to 2, 4 to 5	×	×
TMB	Instruction demand (for test operation)	Decimal	AA(Axis designation)-TMB(Device) Notation example: AA3-TMB1 • Axis designation: 1 to 3 (direct), 100 to 115 (indirect) • Device (decimal): 1 to 6	×	×
OTI	One-touch tuning instruction	Decimal	AA(Axis designation)-OTI(Device) Notation example: AA3-OTI0 • Axis designation: 1 to 3 (direct), 100 to 115 (indirect) • Device (decimal): 0 to 5	×	×
GFDI	Gear failure diagnosis instruction	Decimal	AA(Axis designation)-GFDI(Device) Notation example: AA3-GFDI0 • Axis designation: 1 to 3 (direct), 100 to 115 (indirect) • Device (decimal): 0 to 1	×	×
ECCDI	Encoder communication circuit diagnosis instruction	Decimal	AA(Axis designation)-ECCDI(Device) Notation example: AA3-ECCDI0 • Axis designation: 1 to 3 (direct), 100 to 115 (indirect) • Device (decimal): 0 to 1	×	×

*1 For the devices assigned to EG devices (gateway devices) and the compatible clients, refer to the following.
📖GT Designer3 (GOT2000) Screen Design Manual

For indirect specification of an axis designation, refer to the following.

☞ Page 1399 Indirect specification of an axis number or axis designation ([MELSEC iQ-R, RnMT/NC/RT, CR800-D], [MELSEC iQ-R, RnMT/RT, CR800-D])

Availability of writing/reading data to/from bit devices ([MELSERVO-J5(W)-*G(-RJ), -JET-*G])

The following shows whether writing/reading data to/from bit devices is available by device type.

When the device type is other than the bit type, set the device No. in multiples of 16.

R/W: Both read and write

R/-: Read only

-/W: Write only

-/-: No read/write access

Device name	Device type				
	Bit	Byte (8 bits)	Word (16 bits)	Double-word (32 bits)	Quad-word (64 bits)
SP	-/W	-/-	-/-	-/-	-/-
OM	-/W	-/-	-/-	-/-	-/-
TMB	-/W	-/-	-/-	-/-	-/-
OTI	-/W	-/-	-/-	-/-	-/-
GFDI	-/W	-/-	-/-	-/-	-/-
ECCDI	-/W	-/-	-/-	-/-	-/-

Monitoring-supported word devices ([MELSERVO-J5(W)-*G(-RJ), -JET-*G])

The following table shows monitoring-supported virtual word devices for servo amplifiers.

To check whether writing/reading data to/from each device is available, refer to the following.

☞ Page 1678 Availability of writing/reading data to/from word devices ([MELSERVO-J5(W)-*G(-RJ), -JET-*G])

For details on virtual servo amplifier devices, refer to the following.

☞ Page 1680 Virtual servo amplifier devices ([MELSERVO-J5(W)-*G(-RJ), -JET-*G])

○: Available

×: Not available

Device name		Device No. representation	Setting range	Specifications of EG devices*1	
				Assignment to EG devices	Access using a client
PA	Basic setting parameter	Decimal	AA(Axis designation)-PA(Device) Notation example: AA3-PA1 • Axis designation: 1 to 3 (direct), 100 to 115 (indirect) • Device (decimal): 1 to 44, 1001 to 1044	×	×
PB	Gain filter parameter	Decimal	AA(Axis designation)-PB(Device) Notation example: AA3-PB1 • Axis designation: 1 to 3 (direct), 100 to 115 (indirect) • Device (decimal): 1 to 92, 1001 to 1092	×	×
PC	Extension setting parameter	Decimal	AA(Axis designation)-PC(Device) Notation example: AA3-PC1 • Axis designation: 1 to 3 (direct), 100 to 115 (indirect) • Device (decimal): 1 to 90, 1001 to 1090	×	×
PD	I/O setting parameter	Decimal	AA(Axis designation)-PD(Device) Notation example: AA3-PD1 • Axis designation: 1 to 3 (direct), 100 to 115 (indirect) • Device (decimal): 1 to 72, 1001 to 1072	×	×

Device name		Device No. representation	Setting range	Specifications of EG devices*1	
				Assignment to EG devices	Access using a client
PT	Positioning control parameters	Decimal	AA(Axis designation)-PT(Device) Notation example: AA3-PT1 • Axis designation: 1 to 3 (direct), 100 to 115 (indirect) • Device (decimal): 1 to 90, 1001 to 1090	×	×
PN	Network setting parameters	Decimal	AA(Axis designation)-PN(Device) Notation example: AA3-PN1 • Axis designation: 1 to 3 (direct), 100 to 115 (indirect) • Device (decimal): 1 to 32, 1001 to 1032	×	×
ST	Status display	Decimal	AA(Axis designation)-ST(Device) Notation example: AA3-ST0 • Axis designation: 1 to 3 (direct), 100 to 115 (indirect) • Device (decimal): 0 to 48	×	×
PE	Extension setting No.2 parameter	Decimal	AA(Axis designation)-PE(Device) Notation example: AA3-PE1 • Axis designation: 1 to 3 (direct), 100 to 115 (indirect) • Device (decimal): 1 to 88, 1001 to 1088	×	×
PF	Extension setting No.3 parameter	Decimal	AA(Axis designation)-PF(Device) Notation example: AA3-PF1 • Axis designation: 1 to 3 (direct), 100 to 115 (indirect) • Device (decimal): 1 to 99, 1001 to 1099	×	×
ALM	Alarm (Current alarm)	Decimal	AA(Axis designation)-ALM(Device) Notation example: AA3-ALM0 • Axis designation: 1 to 3 (direct), 100 to 115 (indirect) • Device (decimal): 0 to 2, 11 to 59	×	×
ALM	Alarm (Alarm history)	Decimal	AA(Axis designation)-ALM(Device) Notation example: AA3-ALM200 • Axis designation: 1 to 3 (direct), 100 to 115 (indirect) • Device (decimal): 200 to 215, 220 to 235, 240 to 255, 260 to 275, 280 to 295, 300 to 315	×	×
POS	Point table (position)	Decimal	AA(Axis designation)-POS(Device) Notation example: AA3-POS1 • Axis designation (decimal): 1 to 3 (direct), 100 to 115 (indirect) • Device (decimal): 1 to 255, 1001 to 1255	×	×
SPD	Point table (speed)	Decimal	AA(Axis designation)-SPD(Device) Notation example: AA3-SPD1 • Axis designation (decimal): 1 to 3 (direct), 100 to 115 (indirect) • Device (decimal): 1 to 255, 1001 to 1255	×	×
ACT	Point table (acceleration time constant)	Decimal	AA(Axis designation)-ACT(Device) Notation example: AA3-ACT1 • Axis designation (decimal): 1 to 3 (direct), 100 to 115 (indirect) • Device (decimal): 1 to 255, 1001 to 1255	×	×
DCT	Point table (deceleration time constant)	Decimal	AA(Axis designation)-DCT(Device) Notation example: AA3-DCT1 • Axis designation (decimal): 1 to 3 (direct), 100 to 115 (indirect) • Device (decimal): 1 to 255, 1001 to 1255	×	×

Device name		Device No. representation	Setting range	Specifications of EG devices*1	
				Assignment to EG devices	Access using a client
DWL	Point table (dwell)	Decimal	AA(Axis designation)-DWL(Device) Notation example: AA3-DWL1 • Axis designation (decimal): 1 to 3 (direct), 100 to 115 (indirect) • Device (decimal): 1 to 255, 1001 to 1255	×	×
AUX	Point table (auxiliary function)	Decimal	AA(Axis designation)-AUX(Device) Notation example: AA3-AUX1 • Axis designation (decimal): 1 to 3 (direct), 100 to 115 (indirect) • Device (decimal): 1 to 255, 1001 to 1255	×	×
MCD	Point table (M code)	Decimal	AA(Axis designation)-MCD(Device) Notation example: AA3-MCD1 • Axis designation (decimal): 1 to 3 (direct), 100 to 115 (indirect) • Device (decimal): 1 to 255, 1001 to 1255	×	×
MD	Machine diagnosis data	Decimal	AA(Axis designation)-MD(Device) Notation example: AA3-MD0 • Axis designation: 1 to 3 (direct), 100 to 115 (indirect) • Device (decimal): 0 to 21	×	×
OTS	One-touch tuning data	Decimal	AA(Axis designation)-OTS(Device) Notation example: AA3-OTS0 • Axis designation: 1 to 3 (direct), 100 to 115 (indirect) • Device (decimal): 0 to 5, 3000	×	×
DI	External input	Decimal	AA(Axis designation)-DI(Device) Notation example: AA3-DI0 • Axis designation: 1 to 3 (direct), 100 to 115 (indirect) • Device (decimal): 0 to 6	×	×
DO	External output	Decimal	AA(Axis designation)-DO(Device) Notation example: AA3-DO0 • Axis designation: 1 to 3 (direct), 100 to 115 (indirect) • Device (decimal): 0 to 4	×	×
PO	Option unit parameter	Decimal	AA(Axis designation)-PO(Device) Notation example: AA3-PO1 • Axis designation: 1 to 3 (direct), 100 to 115 (indirect) • Device (decimal): 1 to 2, 1001 to 1002	×	×
PS	Special parameter	Decimal	AA(Axis designation)-PS(Device) Notation example: AA3-PS1 • Axis designation: 1 to 3 (direct), 100 to 115 (indirect) • Device (decimal): 1 to 99, 1001 to 1099	×	×
PL	Linear servo motor/DD motor setting parameters	Decimal	AA(Axis designation)-PL(Device) Notation example: AA3-PL1 • Axis designation: 1 to 3 (direct), 100 to 115 (indirect) • Device (decimal): 1 to 72, 1001 to 1072	×	×
PU	Multi encoder parameter	Decimal	AA(Axis designation)-PU(Device) Notation example: AA3-PU1 • Axis designation: 1 to 3 (direct), 100 to 115 (indirect) • Device (decimal): 1 to 44, 1001 to 1044	×	×

Device name		Device No. representation	Setting range	Specifications of EG devices*1	
				Assignment to EG devices	Access using a client
PVS	Position extension parameter	Decimal	AA(Axis designation)-PVS(Device) Notation example: AA3-PVS1 • Axis designation: 1 to 3 (direct), 100 to 115 (indirect) • Device (decimal): 1 to 32, 1001 to 1032	×	×
NPA	Network basic parameter	Decimal	1 to 12 2001 to 2032	×	×
GFDS	Gear failure diagnosis data	Decimal	AA(Axis designation)-GFDS(Device) Notation example: AA3-GFDS0 • Axis designation: 1 to 3 (direct), 100 to 115 (indirect) • Device (decimal): 0 to 5	×	×
ECCDS	Encoder communication circuit diagnosis data	Decimal	AA(Axis designation)-ECCDS(Device) Notation example: AA3-ECCDS0 • Axis designation: 1 to 3 (direct), 100 to 115 (indirect) • Device (decimal): 0 to 5	×	×

*1 For the devices assigned to EG devices (gateway devices) and the compatible clients, refer to the following.
📖GT Designer3 (GOT2000) Screen Design Manual

For indirect specification of an axis designation, refer to the following.

☞ Page 1399 Indirect specification of an axis number or axis designation ([MELSEC iQ-R, RnMT/NC/RT, CR800-D], [MELSEC iQ-R, RnMT/RT, CR800-D])

Availability of writing/reading data to/from word devices ([MELSERVO-J5(W)-*G(-RJ), -JET-*G])

The following shows whether writing/reading data to/from word devices is available by device type.

R/W: Both read and write

R/-: Read only

-/W: Write only

-/-: No read/write access

Device name	Device type			
	Word (16 bits)	Double-word (32 bits)	Quad-word (64 bits)	Bit of word data
PA	R/W	R/W	-/-	-/-
PB	R/W	R/W	-/-	-/-
PC	R/W	R/W	-/-	-/-
PD	R/W	R/W	-/-	-/-
PT	R/W	R/W	-/-	-/-
PN	R/W	R/W	-/-	-/-
ST	R/-	R/-	-/-	-/-
PE	R/W	R/W	-/-	-/-
PF	R/W	R/W	-/-	-/-
ALM	R/-	R/-	-/-	-/-
POS	R/W	R/W	-/-	-/-
SPD	R/W	R/W	-/-	-/-
ACT	R/W	R/W	-/-	-/-
DCT	R/W	R/W	-/-	-/-
DWL	R/W	R/W	-/-	-/-
AUX	R/W	R/W	-/-	-/-
MCD	R/W	R/W	-/-	-/-
MD	R/-	R/-	-/-	-/-
OTS*1	R/W	R/W	-/-	-/-
DI*2	R/-	R/W	-/-	-/-
DO	R/-	R/-	-/-	-/-
PO	R/W	R/W	-/-	-/-
PS	R/W	R/W	-/-	-/-
PL	R/W	R/W	-/-	-/-
PU	R/W	R/W	-/-	-/-
PVS	R/W	R/W	-/-	-/-
NPA*3	R/W	R/W	-/-	-/-
GFDS	R/-	R/-	-/-	-/-
ECCDS	R/-	R/-	-/-	-/-

*1 Only reading is available for OTS0 to OTS5.

*2 Only reading is available for DI0 to DI3.

*3 Only reading is available for NPA1, NPA8, and NPA2001 to NPA2032.

Monitoring-supported double-word devices ([MELSERVO-J5(W)-*G(-RJ), -JET-*G])

The following table shows monitoring-supported virtual double-word devices for servo amplifiers.

To check whether writing/reading data to/from each device is available, refer to the following.

☞ Page 1679 Availability of writing/reading data to/from double-word devices ([MELSERVO-J5(W)-*G(-RJ), -JET-*G])

For details on virtual servo amplifier devices, refer to the following.

☞ Page 1680 Virtual servo amplifier devices ([MELSERVO-J5(W)-*G(-RJ), -JET-*G])

○: Available

×: Not available

Device name		Device No. representation	Setting range	Specifications of EG devices*1	
				Assignment to EG devices	Access using a client
ALD	Life diagnosis	Decimal	AA(Axis designation)-ALD(Device) Notation example: AA3-ALD0 • Axis designation: 1 to 3 (direct), 100 to 115 (indirect) • Device (decimal): 0 to 1	×	×
TMI	Input signal for test operation (for test operation)	Decimal	AA(Axis designation)-TMI(Device) Notation example: AA3-TMI0 • Axis designation: 1 to 3 (direct), 100 to 115 (indirect) • Device (decimal): 0 to 2	×	×
TMO	Forced output of signal pin (for test operation)	Decimal	AA(Axis designation)-TMO(Device) Notation example: AA3-TMO0 • Axis designation: 1 to 3 (direct), 100 to 115 (indirect) • Device (decimal): 0	×	×
TMD	Set data (for test operation)	Decimal	AA(Axis designation)-TMD(Device) Notation example: AA3-TMD0 • Axis designation: 1 to 3 (direct), 100 to 115 (indirect) • Device (decimal): 0 to 1, 3	×	×

*1 For the devices assigned to EG devices (gateway devices) and the compatible clients, refer to the following.
📖GT Designer3 (GOT2000) Screen Design Manual

For indirect specification of an axis designation, refer to the following.

☞ Page 1399 Indirect specification of an axis number or axis designation ([MELSEC iQ-R, RnMT/NC/RT, CR800-D], [MELSEC iQ-R, RnMT/RT, CR800-D])

Availability of writing/reading data to/from double-word devices ([MELSERVO-J5(W)-*G(-RJ), -JET-*G])

The following shows whether writing/reading data to/from double-word devices is available by device type.

R/W: Both read and write

R/-: Read only

-/W: Write only

-/-: No read/write access

Device name	Device type			
	Word (16 bits)	Double-word (32 bits)	Quad-word (64 bits)	Bit of word data
ALD	-/-	R/-	-/-	-/-
TMI	-/-	-/W	-/-	-/-
TMO	-/-	-/W	-/-	-/-
TMD	-/-	-/W	-/-	-/-

A

Virtual servo amplifier devices ([MELSERVO-J5(W)-*G(-RJ), -JET-*G])

The following shows the correspondence between the virtual devices used in the GOT and the servo amplifier data.

Virtual device name	Reference
SP	☞ Page 1681 Servo amplifier request ([MELSERVO-J5(W)-*G(-RJ), -JET-*G])
OM	☞ Page 1681 Operation mode selection (MELSERVO-J5(W)-*G(-RJ), -JET-*G])
TMB	☞ Page 1681 Instruction demand (for test operation) ([MELSERVO-J5(W)-*G(-RJ), -JET-*G])
OTI	☞ Page 1682 One-touch tuning instruction ([MELSERVO-J5(W)-*G(-RJ), -JET-*G])
GFDI	☞ Page 1682 Gear failure diagnosis instruction ([MELSERVO-J5(W)-*G(-RJ), -JET-*G])
ECCDI	☞ Page 1682 Encoder communication circuit diagnosis instruction ([MELSERVO-J5(W)-*G(-RJ), -JET-*G])
PA	☞ Page 1683 Basic setting parameter ([MELSERVO-J5(W)-*G(-RJ), -JET-*G])
PB	☞ Page 1684 Gain filter parameter ([MELSERVO-J5(W)-*G(-RJ), -JET-*G])
PC	☞ Page 1685 Extension setting parameter ([MELSERVO-J5(W)-*G(-RJ), -JET-*G])
PD	☞ Page 1687 I/O setting parameter ([MELSERVO-J5(W)-*G(-RJ), -JET-*G])
PT	☞ Page 1688 Positioning control parameters ([MELSERVO-J5(W)-*G(-RJ), -JET-*G])
PN	☞ Page 1689 Network setting parameters ([MELSERVO-J5(W)-*G(-RJ), -JET-*G])
ST	☞ Page 1690 Status display ([MELSERVO-J5(W)-*G(-RJ), -JET-*G])
PE	☞ Page 1691 Extension setting No.2 parameter ([MELSERVO-J5(W)-*G(-RJ), -JET-*G])
PF	☞ Page 1692 Extension setting No.3 parameter ([MELSERVO-J5(W)-*G(-RJ), -JET-*G])
ALM	☞ Page 1694 Alarm ([MELSERVO-J5(W)-*G(-RJ), -JET-*G])
	☞ Page 1697 Specifications of ALM260 to ALM275, ALM280 to ALM295, and ALM300 to ALM315 ([MELSERVO-J5(W)-*G(-RJ), -JET-*G])
POS	☞ Page 1697 Point table (position) ([MELSERVO-J5(W)-*G(-RJ), -JET-*G])
SPD	☞ Page 1698 Point table (speed) ([MELSERVO-J5(W)-*G(-RJ), -JET-*G])
ACT	☞ Page 1698 Point table (acceleration time constant) ([MELSERVO-J5(W)-*G(-RJ), -JET-*G])
DCT	☞ Page 1698 Point table (deceleration time constant) ([MELSERVO-J5(W)-*G(-RJ), -JET-*G])
DWL	☞ Page 1698 Point table (dwell) ([MELSERVO-J5(W)-*G(-RJ), -JET-*G])
AUX	☞ Page 1699 Point table (auxiliary function) ([MELSERVO-J5(W)-*G(-RJ), -JET-*G])
MCD	☞ Page 1699 Point table (M code) ([MELSERVO-J5(W)-*G(-RJ), -JET-*G])
MD	☞ Page 1700 Machine diagnosis data ([MELSERVO-J5(W)-*G(-RJ), -JET-*G])
OTS	☞ Page 1701 One-touch tuning data ([MELSERVO-J5(W)-*G(-RJ), -JET-*G])
DI	☞ Page 1701 External input signal in MR-J5-G(-RJ) and MR-J5W□-G ([MELSERVO-J5(W)-*G(-RJ), -JET-*G]) ☞ Page 1702 External input signal in MR-J5D□-G ([MELSERVO-J5(W)-*G(-RJ), -JET-*G]) ☞ Page 1702 External input signal in MR-JET-G ([MELSERVO-J5(W)-*G(-RJ), -JET-*G])
DO	☞ Page 1703 External output signal in MR-J5-G(-RJ) and MR-J5W□-G ([MELSERVO-J5(W)-*G(-RJ), -JET-*G]) ☞ Page 1703 External output signal in MR-J5D□-G ([MELSERVO-J5(W)-*G(-RJ), -JET-*G]) ☞ Page 1703 External output signal in MR-JET-G ([MELSERVO-J5(W)-*G(-RJ), -JET-*G])
PO	☞ Page 1704 Option unit parameter ([MELSERVO-J5(W)-*G(-RJ), -JET-*G])
PS	☞ Page 1704 Special parameter ([MELSERVO-J5(W)-*G(-RJ), -JET-*G])
PL	☞ Page 1704 Linear servo motor/DD motor setting parameters ([MELSERVO-J5(W)-*G(-RJ), -JET-*G])
PU	☞ Page 1705 Multi encoder parameter ([MELSERVO-J5(W)-*G(-RJ), -JET-*G])
PVS	☞ Page 1705 Positioning control parameters ([MELSERVO-J5(W)-*G(-RJ), -JET-*G])
NPA	☞ Page 1706 Network basic parameter ([MELSERVO-J5(W)-*G(-RJ), -JET-*G])
GFDS	☞ Page 1706 Gear failure diagnosis data ([MELSERVO-J5(W)-*G(-RJ), -JET-*G])
ECCDS	☞ Page 1706 Encoder communication circuit diagnosis data ([MELSERVO-J5(W)-*G(-RJ), -JET-*G])
ALD	☞ Page 1706 Life Diagnosis ([MELSERVO-J5(W)-*G(-RJ), -JET-*G])
TMI	☞ Page 1707 Input signal for test operation (for test operation) ([MELSERVO-J5(W)-*G(-RJ), -JET-*G])
TMO	☞ Page 1707 Forced output of signal pin (for test operation) ([MELSERVO-J5(W)-*G(-RJ), -JET-*G])
TMD	☞ Page 1707 Set data (for test operation) ([MELSERVO-J5(W)-*G(-RJ), -JET-*G])

■Servo amplifier request ([MELSERVO-J5(W)-*G(-RJ), -JET-*G])

○: Available

×: Not available

Virtual device name	Name	Symbol	MR-J5-G(-RJ), MR-J5W□-G	MR-JET-G	MR-J5D□-G
SP0	Status display data clear	-	○	○	○
SP1	Current alarm clear	-	○	○	○
SP2	Alarm history clear	-	○	○	○
SP3	External input signal prohibited	-	○	○	○
SP4	External output signal prohibited	-	○	○	○
SP5	External input signal resumed	-	○	○	○
SP6	External output signal resumed	-	○	○	○

When using the servo amplifier request, note the following.

Precautions	Description
When setting a device for a bit switch	Do not select [Alternate] for [Switch Action] of the bit switch.

■Operation mode selection (MELSERVO-J5(W)-*G(-RJ), -JET-*G])

○: Available

×: Not available

Virtual device name	Name	Symbol	MR-J5-G(-RJ), MR-J5W□-G	MR-JET-G	MR-J5D□-G
OM0	Cancel test operation mode	-	○	○	○
OM1	JOG operation	-	○	○	○
OM2	Positioning operation	-	○	○	○
OM4	Output signal (DO) forced output	-	○	○	○
OM5	Single-step feed operation	-	○	○	○

When using the operation mode selection, note the following.

Precautions	Description
When setting a device for a bit switch	Do not select [Alternate] for [Switch Action] of the bit switch.

■Instruction demand (for test operation) ([MELSERVO-J5(W)-*G(-RJ), -JET-*G])

○: Available

×: Not available

Virtual device name	Name	Symbol	MR-J5-G(-RJ), MR-J5W□-G	MR-JET-G	MR-J5D□-G
TMB1	Pause	-	○	○	○
TMB2	Test operation (positioning operation) start command	-	○	○	○
TMB3	Forward rotation direction	-	○	○	○
TMB4	Reverse rotation direction	-	○	○	○
TMB5	Restart for remaining distance	-	○	○	○
TMB6	Remaining distance clear	-	○	○	○

When using the instruction demand (for test operation), note the following.

Precautions	Description
When setting a device for a bit switch	Do not select [Alternate] for [Switch Action] of the bit switch.

■One-touch tuning instruction ([MELSERVO-J5(W)-*G(-RJ), -JET-*G])

○: Available

×: Not available

Virtual device name	Name	Symbol	MR-J5-G(-RJ), MR-J5W□-G	MR-JET-G	MR-J5D□-G
OTI0	One-touch tuning start command (Basic mode)	-	○	○	○
OTI1	One-touch tuning start command (High mode)	-	○	○	○
OTI2	One-touch tuning start command (Low mode)	-	○	○	○
OTI3	One-touch tuning stop command	-	○	○	○
OTI4	Return to initial value	-	○	○	○
OTI5	Return to value before adjustment	-	○	○	○

When using the one-touch tuning instruction, note the following.

Precautions	Description
When setting a device for a bit switch	Do not select [Alternate] for [Switch Action] of the bit switch.

■Gear failure diagnosis instruction ([MELSERVO-J5(W)-*G(-RJ), -JET-*G])

○: Available

×: Not available

Virtual device name	Name	Symbol	MR-J5-G(-RJ), MR-J5W□-G	MR-JET-G	MR-J5D□-G
GFDI0	Backlash estimation start command	-	○	×	○
GFDI1	Backlash estimation stop command	-	○	×	○

When using the gear failure diagnosis instruction, note the following.

Precautions	Description
When setting a device for a bit switch	Do not select [Alternate] for [Switch Action] of the bit switch.

■Encoder communication circuit diagnosis instruction ([MELSERVO-J5(W)-*G(-RJ), -JET-*G])

○: Available

×: Not available

Virtual device name	Name	Symbol	MR-J5-G(-RJ), MR-J5W□-G	MR-JET-G	MR-J5D□-G
ECCDI0	CN2 encoder communication circuit diagnosis start command	-	○	○	○
ECCDI1	CN2L encoder communication circuit diagnosis start command	-	○	○	○

When using the encoder communication circuit diagnosis instruction, note the following.

Precautions	Description
When setting a device for a bit switch	Do not select [Alternate] for [Switch Action] of the bit switch.

■Basic setting parameter ([MELSERVO-J5(W)-*G(-RJ), -JET-*G])

Use an appropriate device according to the write destination of the servo amplifier.

- PA1 to PA44: Writing data to the RAM of a servo amplifier
- PA1001 to PA1044: Writing data to the FlashROM or EEPROM of a servo amplifier

For the parameters prefixed by an asterisk (*), setting becomes effective when the power is turned off once and back on after setting the parameter data.

○: Available

×: Not available

Virtual device name	Name	Symbol	MR-J5-G(-RJ), MR-J5W□-G	MR-JET-G	MR-J5D□-G
PA1, PA1001	Operation mode	**STY	○	×	○
PA2, PA1002	Regenerative option	**REG	○	○	○
PA3, PA1003	Absolute position detection system	*ABS	○	○	○
PA4, PA1004	Function selection A-1	*AOP1	○	○	○
PA5, PA1005	For manufacturer setting	-	×	×	×
PA6, PA1006	Electronic gear numerator	*CMX	○	○	○
PA7, PA1007	Electronic gear denominator	*CDV	○	○	○
PA8, PA1008	Auto tuning mode	ATU	○	○	○
PA9, PA1009	Auto tuning response	RSP	○	○	○
PA10, PA1010	In-position range	INP	○	○	○
PA11, PA1011	Forward rotation torque limit	TLP	○	○	○
PA12, PA1012	Reverse rotation torque limit	TLN	○	○	○
PA13, PA1013	For manufacturer setting	-	×	×	×
PA14, PA1014	Moving direction selection	*POL	○	○	○
PA15, PA1015	Encoder output pulse	*ENR	○	×	○
PA16, PA1016	Encoder output pulse 2	*ENR2	○	×	○
PA17, PA1017	Servo motor series setting	**MSR	○	×	○
PA18, PA1018	Servo motor type setting	**MTY	○	×	○
PA19, PA1019	Parameter block	*BLK	○	○	○
PA20, PA1020	Tough drive setting	*TDS	○	○	○
PA21, PA1021	Function selection A-3	*AOP3	○	○	○
PA22, PA1022	Position control structure selection	**PCS	○	○	○
PA23, PA1023	Drive recorder arbitrary alarm trigger setting	DRAT	○	○	○
PA24, PA1024	Function selection A-4	AOP4	○	○	○
PA25, PA1025	One-touch tuning - Overshoot permissible level	OTHOV	○	○	○
PA26, PA1026	Function selection A-5	*AOP5	○	○	○
PA27, PA1027	For manufacturer setting	-	×	×	×
PA28, PA1028	Function selection A-6	**AOP6	○	○	○
PA29 to PA33, PA1029 to PA1033	For manufacturer setting	-	×	×	×
PA34, PA1034	Quick tuning permissible travel distance	QDIS	○	○	○
PA35 to PA44, PA1035 to PA1044	For manufacturer setting	-	×	×	×

A

■Gain filter parameter ([MELSERVO-J5(W)-*G(-RJ), -JET-*G])

Use an appropriate device according to the write destination of the servo amplifier.

- PB1 to PB92: Writing data to the RAM of a servo amplifier
- PB1001 to PB1092: Writing data to the FlashROM or EEPROM of a servo amplifier

For the parameters prefixed by an asterisk (*), setting becomes effective when the power is turned off once and back on after setting the parameter data.

○: Available

×: Not available

Virtual device name	Name	Symbol	MR-J5-G(-RJ), MR-J5W□-G	MR-JET-G	MR-J5D□-G
PB1, PB1001	Adaptive tuning mode (Adaptive filter II)	FILT	○	○	○
PB2, PB1002	Vib. supp. ctrl tuning mode (Adv. vib. supp. ctrl II)	VRFT	○	○	○
PB3, PB1003	For manufacturer setting	-	×	×	○
PB4, PB1004	Feed forward gain	FFC	○	○	○
PB5, PB1005	For manufacturer setting	-	×	×	×
PB6, PB1006	Load inertia moment ratio/Load mass ratio	GD2	○	○	○
PB7, PB1007	Model loop gain	PG1	○	○	○
PB8, PB1008	Position loop gain	PG2	○	○	○
PB9, PB1009	Speed loop gain	VG2	○	○	○
PB10, PB1010	Speed integral compensation	VIC	○	○	○
PB11, PB1011	Speed differential compensation	VDC	○	○	○
PB12, PB1012	Overshoot amount compensation	OVA	○	○	○
PB13, PB1013	Machine resonance suppression filter 1	NH1	○	○	○
PB14, PB1014	Notch shape selection 1	NHQ1	○	○	○
PB15, PB1015	Machine resonance suppression filter 2	NH2	○	○	○
PB16, PB1016	Notch shape selection 2	NHQ2	○	○	○
PB17, PB1017	Shaft resonance suppression filter	NHF	○	○	○
PB18, PB1018	Low-pass filter setting	LPF	○	○	○
PB19, PB1019	Vibration suppression control 1 - Vibration frequency	VRF11	○	○	○
PB20, PB1020	Vibration suppression control 1 - Resonance freq.	VRF12	○	○	○
PB21, PB1021	Vib. supp. ctrl. 1 - Vibration frequency damping	VRF13	○	○	○
PB22, PB1022	Vib. supp. ctrl. 1 - Resonance frequency damping	VRF14	○	○	○
PB23, PB1023	Low-pass filter selection	VFBF	○	○	○
PB24, PB1024	Slight vibration suppression control	*MVS	○	○	○
PB25, PB1025	Function selection B-1	*BOP1	○	○	○
PB26, PB1026	Gain changing function	*CDP	○	○	○
PB27, PB1027	Gain changing condition	CDL	○	○	○
PB28, PB1028	Gain changing time constant	CDT	○	○	○
PB29, PB1029	Gain changing - Load in. mom. rat./Load mass rat.	GD2B	○	○	○
PB30, PB1030	Gain changing position loop gain	PG2B	○	○	○
PB31, PB1031	Gain changing speed loop gain	VG2B	○	○	○
PB32, PB1032	Gain changing speed integral compensation	VICB	○	○	○
PB33, PB1033	Vib. supp. ctrl. 1 - Vib. frq. after gain changing	VRF11B	○	○	○
PB34, PB1034	Vib. supp. ctrl. 1 - Res. frq. after gain changing	VRF12B	○	○	○
PB35, PB1035	Vib. supp. ctrl. 1 - Vib. frq. damping after gain chng	VRF13B	○	○	○
PB36, PB1036	Vib. supp. ctrl. 1 - Res. frq. damping after gain chng	VRF14B	○	○	○
PB37 to PB44, PB1037 to PB1044	For manufacturer setting	-	×	×	×
PB45, PB1045	Command notch filter	CNHF	○	○	○
PB46, PB1046	Machine resonance suppression filter 3	NH3	○	○	○
PB47, PB1047	Notch shape selection 3	NHQ3	○	○	○
PB48, PB1048	Machine resonance suppression filter 4	NH4	○	○	○
PB49, PB1049	Notch shape selection 4	NHQ4	○	○	○
PB50, PB1050	Machine resonance suppression filter 5	NH5	○	○	○

Virtual device name	Name	Symbol	MR-J5-G(-RJ), MR-J5W□-G	MR-JET-G	MR-J5D□-G
PB51, PB1051	Notch shape selection 5	NHQ5	○	○	○
PB52, PB1052	Vibration suppression control 2 - Vibration frequency	VRF21	○	○	○
PB53, PB1053	Vibration suppression control 2 - Resonance freq.	VRF22	○	○	○
PB54, PB1054	Vib. supp. ctrl. 2 - Vibration frequency damping	VRF23	○	○	○
PB55, PB1055	Vib. supp. ctrl. 2 - Resonance frequency damping	VRF24	○	○	○
PB56, PB1056	Vib. supp. ctrl. 2 - Vib. frq. after gain changing	VRF21B	○	○	○
PB57, PB1057	Vib. supp. ctrl. 2 - Res. frq. after gain changing	VRF22B	○	○	○
PB58, PB1058	Vib. supp. ctrl. 2 - Vib. frq. damping after gain chng	VRF23B	○	○	○
PB59, PB1059	Vib. supp. ctrl. 2 - Res. frq. damping after gain chng	VRF24B	○	○	○
PB60, PB1060	Gain changing model loop gain	PG1B	○	○	○
PB61 to PB64, PB1061 to PB1064	For manufacturer setting	-	×	×	×
PB65, PB1065	Gain changing 2 condition	CDL2	○	○	○
PB66, PB1066	Gain changing 2 time constant	CDT2	○	○	○
PB67, PB1067	Gain changing 2 - Load in. mom. rat./Load mass rat.	GD2C	○	○	○
PB68, PB1068	Gain changing 2 position loop gain	PG2C	○	○	○
PB69, PB1069	Gain changing 2 speed loop gain	VG2C	○	○	○
PB70, PB1070	Gain changing 2 speed integral compensation	VICC	○	○	○
PB71, PB1071	Vib. supp. ctrl. 1 - Vib. frq. after gain changing 2	VRF11C	○	○	○
PB72, PB1072	Vib. supp. ctrl. 1 - Res. frq. after gain changing 2	VRF12C	○	○	○
PB73, PB1073	Vib. supp. ctrl. 1 - Vib. frq. damping aft. gain chng2	VRF13C	○	○	○
PB74, PB1074	Vib. supp. ctrl. 1 - Res. frq. damping aft. gain chng2	VRF14C	○	○	○
PB75, PB1075	Vib. supp. ctrl. 2 - Vib. frq. after gain changing 2	VRF21C	○	○	○
PB76, PB1076	Vib. supp. ctrl. 2 - Res. frq. after gain changing 2	VRF22C	○	○	○
PB77, PB1077	Vib. supp. ctrl. 2 - Vib. frq. damping aft. gain chng2	VRF23C	○	○	○
PB78, PB1078	Vib. supp. ctrl. 2 - Res. frq. damping aft. gain chng2	VRF24C	○	○	○
PB79, PB1079	Gain changing 2 model loop gain	PG1C	○	○	○
PB80, PB1080	For manufacturer setting	-	×	×	×
PB81, PB1081	Command filter	*CFIL	○	○	○
PB82, PB1082	Position command smoothing filter time constant	PFT	○	○	○
PB83 to PB92, PB1083 to PB1092	For manufacturer setting	-	×	×	×

■Extension setting parameter ([MELSERVO-J5(W)-*G(-RJ), -JET-*G])

Use an appropriate device according to the write destination of the servo amplifier.

- PC1 to PC90: Writing data to the RAM of a servo amplifier
- PC1001 to PC1090: Writing data to the FlashROM or EEPROM of a servo amplifier

For the parameters prefixed by an asterisk (*), setting becomes effective when the power is turned off once and back on after setting the parameter data.

○: Available

×: Not available

Virtual device name	Name	Symbol	MR-J5-G(-RJ), MR-J5W□-G	MR-JET-G	MR-J5D□-G
PC1, PC1001	Error excessive alarm level	ERZ	○	○	○
PC2, PC1002	Electromagnetic brake sequence output	MBR	○	○	○
PC3, PC1003	Encoder output pulse selection	*ENRS	○	×	○
PC4, PC1004	Function selection C-1	**COP1	○	○	○
PC5, PC1005	Function selection C-2	**COP2	○	○	○
PC6, PC1006	Function selection C-3	*COP3	○	○	○
PC7, PC1007	Zero speed	ZSP	○	○	○
PC8, PC1008	Overspeed alarm detection level	OSL	○	○	○
PC9, PC1009	Analog monitor 1 output	MOD1	○	×	○
PC10, PC1010	Analog monitor 2 output	MOD2	○	×	○

Virtual device name	Name	Symbol	MR-J5-G(-RJ), MR-J5W□-G	MR-JET-G	MR-J5D□-G
PC11, PC1011	Analog monitor 1 offset	MO1	○	×	○
PC12, PC1012	Analog monitor 2 offset	MO2	○	×	○
PC13 to PC15, PC1013 to PC1015	For manufacturer setting	-	×	×	×
PC16, PC1016	Function selection C-3A	*COP3A	○	×	○
PC17, PC1017	Function selection C-4	**COP4	○	×	○
PC18, PC1018	For manufacturer setting	-	×	×	×
PC19, PC1019	Function selection C-6	*COP6	○	○	○
PC20, PC1020	Function selection C-7	*COP7	○	○	○
PC21, PC1021	Alarm history clear	*BPS	○	○	○
PC22 and PC23, PC1022 and PC1023	For manufacturer setting	-	×	×	×
PC24, PC1024	Forced stop deceleration time constant	RSBR	○	○	○
PC25, PC1025	For manufacturer setting	-	×	×	×
PC26, PC1026	Function selection C-8	**COP8	○	×	○
PC27, PC1027	Function selection C-9	**COP9	○	○	○
PC28, PC1028	For manufacturer setting	-	×	×	×
PC29, PC1029	Function selection C-B	*COPB	○	○	○
PC30, PC1030	For manufacturer setting	-	×	×	×
PC31, PC1031	Vertical ax.freefall prevention compensation amount	RSUP1	○	○	○
PC32 to PC37, PC1032 to PC1037	For manufacturer setting	-	×	×	×
PC38, PC1038	Error excessive warning level	ERW	○	○	○
PC39 to PC40, PC1039 to PC1040	For manufacturer setting	-	×	×	×
PC41, PC1041	Function selection C-J	*COPJ	×	×	○
PC42 to PC45, PC1042 to PC1045	For manufacturer setting	-	×	×	×
PC46, PC1046	Drive unit function selection 2	*DUOP2	×	×	○
PC47 to PC64, PC1047 to PC1064	For manufacturer setting	-	×	×	×
PC65, PC1065	Zero speed 2 level	ZSP2L	○	×	○
PC66, PC1066	Zero speed 2 filter time	ZSP2F	○	×	○
PC67, PC1067	Following error output level	FEW	○	○	○
PC68, PC1068	For manufacturer setting	-	×	×	×
PC69, PC1069	Following error output filter time	FEWF	○	○	○
PC70, PC1070	In-position 2 output range	INP2R	○	×	○
PC71, PC1071	In-position 2 output filter time	INP2F	○	×	○
PC72, PC1072	Speed reached 2 output range	SA2R	○	×	○
PC73, PC1073	Speed reached 2 output filter time	SA2F	○	×	○
PC74 to PC75, PC1074 to PC1075	For manufacturer setting	-	×	×	×
PC76, PC1076	Function selection C-E	*COPE	○	○	○
PC77, PC1077	For manufacturer setting	-	×	×	×
PC78, PC1078	Function selection C-F	*COPF	○	○	○
PC79, PC1079	Function selection C-G	*COPG	○	○	○
PC80, PC1080	For manufacturer setting	-	×	×	×
PC81, PC1081	Function selection C-H	**COPH	○	×	×
PC82 to PC90, PC1082 to PC1090	For manufacturer setting	-	×	×	×

■I/O setting parameter ([MELSERVO-J5(W)-*G(-RJ), -JET-*G])

Use an appropriate device according to the write destination of the servo amplifier.

- PD1 to PD72: Writing data to the RAM of a servo amplifier
- PD1001 to PD1072: Writing data to the FlashROM or EEPROM of a servo amplifier

For the parameters prefixed by an asterisk (*), setting becomes effective when the power is turned off once and back on after setting the parameter data.

○: Available

×: Not available

Virtual device name	Name	Symbol	MR-J5-G(-RJ), MR-J5W□-G	MR-JET-G	MR-J5D□-G
PD1, PD1001	Input signal automatic on selection 1	*DIA1	○	○	○
PD2, PD1002	For manufacturer setting	-	×	×	×
PD3, PD1003	Input device selection 1	*DI1	○	○	○
PD4, PD1004	Input device selection 2	*DI2	○	○	○
PD5, PD1005	Input device selection 3	*DI3	○	○	○
PD6, PD1006	For manufacturer setting	-	×	×	×
PD7, PD1007	Output device selection 1	*DO1	○	○	○
PD8, PD1008	Output device selection 2	*DO2	○	○	○
PD9, PD1009	Output device selection 3	*DO3	○	○	○
PD10, PD1010	For manufacturer setting	-	×	×	×
PD11, PD1011	Input filter setting	*DIF	○	○	○
PD12, PD1012	Function selection D-1	*DOP1	○	○	○
PD13, PD1013	Function selection D-2	*DOP2	○	○	○
PD14, PD1014	Function selection D-3	*DOP3	○	○	○
PD15 to PD37, PD1015 to PD1037	For manufacturer setting	-	×	×	×
PD38, PD1038	Input device selection 4	*DI4	○	×	○
PD39, PD1039	Input device selection 5	*DI5	○	×	○
PD40, PD1040	For manufacturer setting	-	×	×	×
PD41, PD1041	Function selection D-4	*DOP4	○	○	○
PD42 to PD50, PD1042 to PD1050	For manufacturer setting	-	×	×	×
PD51, PD1051	Input device selection 3-2	*DI3W2	○	×	○
PD52 to PD59, PD1052 to PD1059	For manufacturer setting	-	×	×	×
PD60, PD1060	DI pin polarity selection	*DIP	○	○	○
PD61 to PD72, PD1061 to PD1072	For manufacturer setting	-	×	×	×

A

■Positioning control parameters ([MELSERVO-J5(W)-*G(-RJ), -JET-*G])

Use an appropriate device according to the write destination of the servo amplifier.

- PT1 to PT90: Writing data to the RAM of a servo amplifier
- PT1001 to PT1090: Writing data to the FlashROM or EEPROM of a servo amplifier

For the parameters prefixed by an asterisk (*), setting becomes effective when the power is turned off once and back on after setting the parameter data.

○: Available

×: Not available

Virtual device name	Name	Symbol	MR-J5-G(-RJ), MR-J5W□-G	MR-JET-G	MR-J5D□-G
PT1, PT1001	Command mode selection	**CTY	○	○	○
PT2, PT1002	Function selection T-1	*TOP1	○	×	○
PT3 to PT4, PT1003 to PT1004	For manufacturer setting	-	×	×	×
PT5, PT1005	Home position return speed	ZRF	○	○	○
PT6, PT1006	Creep speed	CRF	○	○	○
PT7, PT1007	Home position shift distance	ZST	○	○	○
PT8, PT1008	Home position return position data	ZPS	○	○	○
PT9, PT1009	Moving distance after proximity dog	DCT	○	○	○
PT10, PT1010	Stopper type home position return stopper time	ZTM	○	○	○
PT11, PT1011	Stopper type home position return torque limit value	ZTT	○	○	○
PT12, PT1012	Rough match output range	CRP	○	×	○
PT13 to PT14, PT1013 to PT1014	For manufacturer setting	-	×	×	×
PT15, PT1015	Software position limit+	LMP	○	○	○
PT16, PT1016	For manufacturer setting	-	×	×	×
PT17, PT1017	Software position limit-	LMN	○	○	○
PT18, PT1018	For manufacturer setting	-	×	×	×
PT19, PT1019	Position range output 1 address+	*LPP1	○	×	○
PT20, PT1020	For manufacturer setting	-	×	×	×
PT21, PT1021	Position range output 1 address-	*LNP1	○	×	○
PT22 to PT28, PT1022 to PT1028	For manufacturer setting	-	×	×	×
PT29, PT1029	Function selection T-3	*TOP3	○	○	○
PT30 to PT33, PT1030 to PT1033	For manufacturer setting	-	×	×	×
PT34, PT1034	Positioning operation data default	**PDEF	×	×	○
PT35 to PT37, PT1035 to PT1037	For manufacturer setting	-	×	×	×
PT38, PT1038	Function selection T-7	**TOP7	×	×	○
PT39 to PT40, PT1039 to PT1040	For manufacturer setting	-	×	×	×
PT41, PT1041	Function selection T-8	TOP8	○	○	○
PT42 to PT44, PT1042 to PT1044	For manufacturer setting	-	×	×	×
PT45, PT1045	Home position return method	HMM	○	○	○
PT46 to PT48, PT1046 to PT1048	For manufacturer setting	-	×	×	×
PT49, PT1049	Acceleration time constant	STA	○	×	○
PT50, PT1050	Deceleration time constant	STB	○	×	○
PT51, PT1051	S-pattern acceleration/deceleration time constant	STC	○	×	○
PT52, PT1052	For manufacturer setting	-	×	×	×
PT53, PT1053	Torque slope	TQS	○	×	○
PT54, PT1054	For manufacturer setting	-	×	×	×
PT55, PT1055	Function selection T-10	*TOP10	○	○	○

Virtual device name	Name	Symbol	MR-J5-G(-RJ), MR-J5W□-G	MR-JET-G	MR-J5D□-G
PT56, PT1056	Home position return acceleration time constant	HMA	○	○	○
PT57, PT1057	Home position return deceleration time constant	HMB	○	○	○
PT58 to PT64, PT1058 to PT1064	For manufacturer setting	-	×	×	×
PT65, PT1065	Profile speed command	PVC	○	×	○
PT66, PT1066	Maximum profile speed	MPVC	○	×	○
PT67, PT1067	Speed limit	VLMT	○	○	○
PT68, PT1068	Function selection T-11	TOP11	○	○	○
PT69 to PT90, PT1069 to PT1090	For manufacturer setting	-	×	×	×

■Network setting parameters ([MELSERVO-J5(W)-*G(-RJ), -JET-*G])

Use an appropriate device according to the write destination of the servo amplifier.

- PN1 to PN32: Writing data to the RAM of a servo amplifier
- PN1001 to PN1032: Writing data to the FlashROM or EEPROM of a servo amplifier

For the parameters prefixed by an asterisk (*), setting becomes effective when the power is turned off once and back on after setting the parameter data.

○: Available

×: Not available

Virtual device name	Name	Symbol	MR-J5-G(-RJ), MR-J5W□-G	MR-JET-G	MR-J5D□-G
PN1, PN1001	For manufacturer setting	-	×	×	×
PN2, PN1002	Communication error detection time	CERT	○	○	○
PN3 to PN4, PN1003 to PN1004	For manufacturer setting	-	×	×	×
PN5, PN1005	Communication error detection frequency setting	CERI	○	○	○
PN6 to PN12, PN1006 to PN1012	For manufacturer setting	-	×	×	×
PN13, PN1013	Network protocol setup	**NPS	×	×	○
PN14 to PN19, PN1014 to PN1019	For manufacturer setting	-	×	×	×
PN20, PN1020	Automatic parameter backup update interval	**PABI	○	○	○
PN21, PN1021	For manufacturer setting	-	×	×	×
PN22 , PN1022	Function selection N-5	**NOP5	×	×	○
PN23 to PN32, PN1023 to PN1032	For manufacturer setting	-	×	×	×

A

■Status display ([MELSERVO-J5(W)-*G(-RJ), -JET-*G])

○: Available

×: Not available

Virtual device name	Name	Symbol	MR-J5-G(-RJ), MR-J5W□-G	MR-JET-G	MR-J5D□-G
ST0	Cumulative feedback pulses	-	○	○	○
ST1	Servo motor speed	-	○	○	○
ST2	Droop pulses	-	○	○	○
ST3	Cumulative command pulses	-	○	○	○
ST4	Command pulse frequency	-	○	○	○
ST5 to ST6	For manufacturer setting	-	×	×	×
ST7	Regenerative load ratio	-	○	○	○
ST8	Effective load ratio	-	○	○	○
ST9	Peak load ratio	-	○	○	○
ST10	Torque/Instantaneous torque	-	○	○	○
ST11	Position within one-revolution	-	○	○	○
ST12	ABS counter	-	○	○	○
ST13	Load to motor inertia ratio	-	○	○	○
ST14	Bus voltage	-	○	○	○
ST15	Load-side cumulative feedback pulses	-	○	×	○
ST16	Load side encoder droop pulses	-	○	×	○
ST17	Load-side encoder information 1	-	○	×	○
ST18	Load-side encoder information 2	-	○	×	○
ST19 to ST21	For manufacturer setting	-	×	×	×
ST22	Temperature of servo motor thermistor	-	○	○	○
ST23	Cumulative feedback pulses (Motor unit)	-	○	○	○
ST24	Electrical angle	-	○	×	○
ST25 to ST29	For manufacturer setting	-	×	×	×
ST30	Motor/load side position difference	-	○	×	○
ST31	Motor/load side speed difference	-	○	×	○
ST32	Encoder inside temperature	-	○	○	○
ST33	Settling time	-	○	○	○
ST34	Oscillation detection frequency	-	○	○	○
ST35	Number of tough drive operations	-	○	○	○
ST36 to ST39	For manufacturer setting	-	×	×	×
ST40	Unit power consumption	-	○	○	○
ST41	Unit total power consumption	-	○	○	○
ST42 to ST48	For manufacturer setting	-	×	×	×

■Extension setting No.2 parameter ([MELSERVO-J5(W)-*G(-RJ), -JET-*G])

Use an appropriate device according to the write destination of the servo amplifier.

- PE1 to PE88: Writing data to the RAM of a servo amplifier
- PE1001 to PE1088: Writing data to the FlashROM or EEPROM of a servo amplifier

For the parameters prefixed by an asterisk (*), setting becomes effective when the power is turned off once and back on after setting the parameter data.

○: Available

×: Not available

Virtual device name	Name	Symbol	MR-J5-G(-RJ), MR-J5W□-G	MR-JET-G	MR-J5D□-G
PE1, PE1001	Fully closed loop function selection 1	**FCT1	○	×	○
PE2, PE1002	For manufacturer setting	-	×	×	×
PE3, PE1003	Fully closed loop function selection 2	*FCT2	○	×	○
PE4, PE1004	Fully closed loop ctrl. - F/B pls. elec. gear 1 nmrtr.	**FBN	○	×	○
PE5, PE1005	Fully closed loop ctrl. - F/B pls. elec. gear 1 dnmntr.	**FBD	○	×	○
PE6, PE1006	Fully closed loop ctrl. - Spd. dev. err. detection level	BC1	○	×	○
PE7, PE1007	Fully closed loop ctrl. - Pos. dev. err. detection level	BC2	○	×	○
PE8, PE1008	Fully closed dual feedback filter	DUF	○	×	○
PE9, PE1009	For manufacturer setting	-	×	×	×
PE10, PE1010	Fully closed loop function selection 3	FCT3	○	×	○
PE11 to PE40, PE1011 to PE1040	For manufacturer setting	-	×	×	×
PE41, PE1041	Function selection E-3	EOP3	○	○	○
PE42 to PE43, PE1042 to PE1043	For manufacturer setting	-	×	×	×
PE44, PE1044	Lost motion positive side compensation value sel.	LMCP	○	○	○
PE45, PE1045	Lost motion negative side compensation value sel.	LMCN	○	○	○
PE46, PE1046	Lost motion filter setting	LMFLT	○	○	○
PE47, PE1047	Unbalanced torque offset	TOF	○	○	○
PE48, PE1048	Lost motion compensation function selection	*LMOP	○	○	○
PE49, PE1049	Lost motion compensation timing	LMCD	○	○	○
PE50, PE1050	Lost motion compensation dead zone	LMCT	○	○	○
PE51, PE1051	Load-side encoder resolution setting	**EDV2	×	×	○
PE52, PE1052	For manufacturer setting	-	×	×	×
PE53, PE1053	Maximum torque limit 1	TLMX1	○	○	○
PE54 to PE88, PE1054 to PE1088	For manufacturer setting	-	×	×	×

■Extension setting No.3 parameter ([MELSERVO-J5(W)-*G(-RJ), -JET-*G])

Use an appropriate device according to the write destination of the servo amplifier.

- PF1 to PF99: Writing data to the RAM of a servo amplifier
- PF1001 to PF1099: Writing data to the FlashROM or EEPROM of a servo amplifier

For the parameters prefixed by an asterisk (*), setting becomes effective when the power is turned off once and back on after setting the parameter data.

○: Available

×: Not available

Virtual device name	Name	Symbol	MR-J5-G(-RJ), MR-J5W□-G	MR-JET-G	MR-J5D□-G
PF1, PF1001	For manufacturer setting	-	×	×	×
PF2, PF1002	Function selection F-2	*FOP2	○	○	○
PF3 to PF5, PF1003 to PF1005	For manufacturer setting	-	×	×	×
PF6, PF1006	Function selection F-5	*FOP5	○	○	○
PF7 to PF11, PF1007 to PF1011	For manufacturer setting	-	×	×	×
PF12, PF1012	Electronic dynamic brake operating time	DBT	○	○	○
PF13 to PF17, PF1013 to PF1017	For manufacturer setting	-	×	×	×
PF18, PF1018	STO diagnostic error detection time	**STOD	○	×	○
PF19, PF1019	Friction failure prediction compen. coefficient 1	TSL	○	×	○
PF20, PF1020	Friction failure prediction compen. coefficient 2	TIC	○	×	○
PF21, PF1021	Drive recorder switching time setting	DRT	○	○	○
PF22, PF1022	For manufacturer setting	-	×	×	×
PF23, PF1023	Vibration tough drive - Oscillation detection level	OSCL1	○	○	○
PF24, PF1024	Function selection F-9	*FOP9	○	○	○
PF25, PF1025	SEMI-F47 Inst pwr.fail.det.t. (Inst pwr.fail.tuf.drv.)	CVAT	○	×	○
	Instantaneous power failure tough drive - Detection time	CVAT	×	○	×
PF26 to PF28, PF1026 to PF1028	For manufacturer setting	-	×	×	×
PF29, PF1029	Function selection F-10	*FOP10	×	×	○
PF30, PF1030	For manufacturer setting	-	×	×	×
PF31, PF1031	Machine diagnosis func. - Friction judgment speed	FRIC	○	○	○
PF32, PF1032	Oscillation detection alarm time	*VIBT	○	○	○
PF33, PF1033	For manufacturer setting	-	×	×	×
PF34, PF1034	Machine diagnosis function selection	*MFP	○	○	○
PF35 to PF39, PF1035 to PF1039	For manufacturer setting	-	×	×	×
PF40, PF1040	Machine failure prediction parameter	MFPP	○	×	○
PF41, PF1041	Failure prediction - Servo motor total move distance	FPMT	○	×	○
PF42, PF1042	Friction failure prediction average characteristic	PAV	○	×	○
PF43, PF1043	Friction failure prediction standard deviation	PSD	○	×	○
PF44, PF1044	For manufacturer setting	-	×	×	×
PF45, PF1045	Vibration failure prediction average characteristic	VAV	○	×	○
PF46, PF1046	Vibration failure prediction standard deviation	VSC	○	×	○
PF47, PF1047	Servo motor total move distance offset	TMO	○	×	○
PF48 to PF65, PF1048 to PF1065	For manufacturer setting	-	×	×	×
PF66, PF1066	Gear ratio setting for backlash estimation	BLG	○	×	○
PF67, PF1067	Backlash nominal value	BLN	○	×	○
PF68, PF1068	Backlash threshold magnification	BLTT	○	×	○
PF69, PF1069	Static friction failure prediction avg. characteristic	SPAV2	○	×	○
PF70, PF1070	Static friction failure prediction standard deviation	SPSD2	○	×	○
PF71, PF1071	Belt failure prediction function selection	BFP	○	×	○

Virtual device name	Name	Symbol	MR-J5-G(-RJ), MR-J5W□-G	MR-JET-G	MR-J5D□-G
PF72, PF1072	Belt tension at installation	SBT	○	×	○
PF73, PF1073	Belt tension at extension	ABT	○	×	○
PF74, PF1074	Static friction at installation	SSF	○	×	○
PF75, PF1075	Static friction at extension	ASF	○	×	○
PF76, PF1076	Belt tension error threshold	BTS	○	×	○
PF77 to PF79, PF1077 to PF1079	For manufacturer setting	-	×	×	×
PF80, PF1080	Drive recorder Operation condition selection	DRMC	○	○	○
PF81, PF1081	Drive recorder Sampling operation selection	DRMS	○	○	○
PF82, PF1082	Drive recorder Trigger operation selection	DRTM	○	○	○
PF83, PF1083	Drive recorder Trigger operation axis common sel.	**DRTAX	○	×	○
PF84, PF1084	Drive recorder Trigger channel selection	DRTC	○	○	○
PF85, PF1085	Drive recorder Trigger level setting 1	DRTL1	○	○	○
PF86, PF1086	Drive recorder Trigger level setting 2	DRTL2	○	○	○
PF87, PF1087	Drive recorder Analog channel setting 1	DRAC1	○	○	○
PF88, PF1088	Drive recorder Analog channel setting 2	DRAC2	○	○	○
PF89, PF1089	Drive recorder Analog channel setting 3	DRAC3	○	○	○
PF90, PF1090	Drive recorder Analog channel setting 4	DRAC4	○	○	○
PF91, PF1091	Drive recorder Digital channel setting 1	DRDC1	○	○	○
PF92, PF1092	Drive recorder Digital channel setting 2	DRDC2	○	○	○
PF93, PF1093	Drive recorder Digital channel setting 3	DRDC3	○	○	○
PF94, PF1094	Drive recorder Digital channel setting 4	DRDC4	○	○	○
PF95, PF1095	Drive recorder History clear	**DRCLR	○	○	○
PF96 to PF99, PF1096 to PF1099	For manufacturer setting	-	×	×	×

■Alarm ([MELSERVO-J5(W)-*G(-RJ), -JET-*G])

○: Available

×: Not available

Virtual device name	Name	Symbol	MR-J5-G(-RJ), MR-J5W□-G	MR-JET-G	MR-J5D□-G
ALM0	Current alarm number	-	○	○	○
ALM1	Detailed data of current alarms	-	○	○	○
ALM2[*1]	Currently occurring alarm number and detail number	-	○	○	○
ALM11	Servo status(alarm) Cumulative feedback pulses	-	○	○	○
ALM12	Servo status(alarm) Servo motor speed	-	○	○	○
ALM13	Servo status(alarm) Droop pulses	-	○	○	○
ALM14	Servo status(alarm) Cumulative command pulses	-	○	○	○
ALM15	Servo status(alarm) Command pulse frequency	-	○	○	○
ALM16 to ALM17	For manufacturer setting	-	×	×	×
ALM18	Servo status(alarm) Regenerative load ratio	-	○	○	○
ALM19	Servo status(alarm) Effective load ratio	-	○	○	○
ALM20	Servo status(alarm) Peak load ratio	-	○	○	○
ALM21	Servo status(alarm) Torque/Instantaneous torque	-	○	○	○
ALM22	Servo status(alarm) Position within one-revolution	-	○	○	○
ALM23	Servo status(alarm) ABS counter	-	○	○	○
ALM24	Servo status(alarm) Load to motor inertia ratio	-	○	○	○
ALM25	Servo status(alarm) Bus voltage	-	○	○	○
ALM26	Servo status(alarm) Load-side cumulative feedback pulses	-	○	×	○
ALM27	Servo status(alarm) Load side encoder droop pulses	-	○	×	○
ALM28	Servo status(alarm) Load-side encoder information 1	-	○	×	○
ALM29	Servo status(alarm) Load-side encoder information 2	-	○	×	○
ALM30 to ALM32	For manufacturer setting	-	×	×	×
ALM33	Servo status(alarm) Temperature of servo motor thermistor	-	○	○	○
ALM34	Servo status(alarm) Cumulative feedback pulses (Motor unit)	-	○	○	○
ALM35	Servo status(alarm) Electrical angle	-	○	×	○
ALM36 to ALM40	For manufacturer setting	-	×	×	×
ALM41	Servo status(alarm) Motor/load side position difference	-	○	×	○
ALM42	Servo status(alarm) Motor/load side speed difference	-	○	×	○
ALM43	Servo status(alarm) Encoder inside temperature	-	○	○	○
ALM44	Servo status(alarm) Settling time	-	○	○	○
ALM45	Servo status(alarm) Oscillation detection frequency	-	○	○	○
ALM46	Servo status(alarm) Number of tough drive operations	-	○	○	○
ALM47 to ALM50	For manufacturer setting	-	×	×	×
ALM51	Servo status(alarm) Unit power consumption	-	○	○	○
ALM52	Servo status(alarm) Unit power consumption	-	○	○	○
ALM53 to ALM59	For manufacturer setting	-	×	×	×
ALM200	Alarm number in alarm history: most recent alarm	-	○	○	○
ALM201	Alarm number in alarm history: 1st alarm in past	-	○	○	○
ALM202	Alarm number in alarm history: 2nd alarm in past	-	○	○	○
ALM203	Alarm number in alarm history: 3rd alarm in past	-	○	○	○
ALM204	Alarm number in alarm history: 4th alarm in past	-	○	○	○
ALM205	Alarm number in alarm history: 5th alarm in past	-	○	○	○
ALM206	Alarm number in alarm history: 6th alarm in past	-	○	○	○
ALM207	Alarm number in alarm history: 7th alarm in past	-	○	○	○
ALM208	Alarm number in alarm history: 8th alarm in past	-	○	○	○
ALM209	Alarm number in alarm history: 9th alarm in past	-	○	○	○
ALM210	Alarm number in alarm history: 10th alarm in past	-	○	○	○
ALM211	Alarm number in alarm history: 11th alarm in past	-	○	○	○

Virtual device name	Name	Symbol	MR-J5-G(-RJ), MR-J5W□-G	MR-JET-G	MR-J5D□-G
ALM212	Alarm number in alarm history: 12th alarm in past	-	○	○	○
ALM213	Alarm number in alarm history: 13th alarm in past	-	○	○	○
ALM214	Alarm number in alarm history: 14th alarm in past	-	○	○	○
ALM215	Alarm number in alarm history: 15th alarm in past	-	○	○	○
ALM220	Alarm occurrence time (cumulative power-on time) in alarm history: most recent alarm	-	○	○	○
ALM221	Alarm occurrence time (cumulative power-on time) in alarm history: 1st alarm in past	-	○	○	○
ALM222	Alarm occurrence time (cumulative power-on time) in alarm history: 2nd alarm in past	-	○	○	○
ALM223	Alarm occurrence time (cumulative power-on time) in alarm history: 3rd alarm in past	-	○	○	○
ALM224	Alarm occurrence time (cumulative power-on time) in alarm history: 4th alarm in past	-	○	○	○
ALM225	Alarm occurrence time (cumulative power-on time) in alarm history: 5th alarm in past	-	○	○	○
ALM226	Alarm occurrence time (cumulative power-on time) in alarm history: 6th alarm in past	-	○	○	○
ALM227	Alarm occurrence time (cumulative power-on time) in alarm history: 7th alarm in past	-	○	○	○
ALM228	Alarm occurrence time (cumulative power-on time) in alarm history: 8th alarm in past	-	○	○	○
ALM229	Alarm occurrence time (cumulative power-on time) in alarm history: 9th alarm in past	-	○	○	○
ALM230	Alarm occurrence time (cumulative power-on time) in alarm history: 10th alarm in past	-	○	○	○
ALM231	Alarm occurrence time (cumulative power-on time) in alarm history: 11th alarm in past	-	○	○	○
ALM232	Alarm occurrence time (cumulative power-on time) in alarm history: 12th alarm in past	-	○	○	○
ALM233	Alarm occurrence time (cumulative power-on time) in alarm history: 13th alarm in past	-	○	○	○
ALM234	Alarm occurrence time (cumulative power-on time) in alarm history: 14th alarm in past	-	○	○	○
ALM235	Alarm occurrence time (cumulative power-on time) in alarm history: 15th alarm in past	-	○	○	○
ALM240	Alarm detail number in alarm history: most recent alarm	-	○	○	○
ALM241	Alarm detail number in alarm history: 1st alarm in past	-	○	○	○
ALM242	Alarm detail number in alarm history: 2nd alarm in past	-	○	○	○
ALM243	Alarm detail number in alarm history: 3rd alarm in past	-	○	○	○
ALM244	Alarm detail number in alarm history: 4th alarm in past	-	○	○	○
ALM245	Alarm detail number in alarm history: 5th alarm in past	-	○	○	○
ALM246	Alarm detail number in alarm history: 6th alarm in past	-	○	○	○
ALM247	Alarm detail number in alarm history: 7th alarm in past	-	○	○	○
ALM248	Alarm detail number in alarm history: 8th alarm in past	-	○	○	○
ALM249	Alarm detail number in alarm history: 9th alarm in past	-	○	○	○
ALM250	Alarm detail number in alarm history: 10th alarm in past	-	○	○	○
ALM251	Alarm detail number in alarm history: 11th alarm in past	-	○	○	○
ALM252	Alarm detail number in alarm history: 12th alarm in past	-	○	○	○
ALM253	Alarm detail number in alarm history: 13th alarm in past	-	○	○	○
ALM254	Alarm detail number in alarm history: 14th alarm in past	-	○	○	○
ALM255	Alarm detail number in alarm history: 15th alarm in past	-	○	○	○
ALM260	Alarm occurrence time (year, month) in alarm history: most recent alarm	-	○	○	○
ALM261	Alarm occurrence time (year, month) in alarm history: 1st alarm in past	-	○	○	○

Virtual device name	Name	Symbol	MR-J5-G(-RJ), MR-J5W□-G	MR-JET-G	MR-J5D□-G
ALM262	Alarm occurrence time (year, month) in alarm history: 2nd alarm in past	-	○	○	○
ALM263	Alarm detail number in alarm history: 3rd alarm in past	-	○	○	○
ALM264	Alarm detail number in alarm history: 4th alarm in past	-	○	○	○
ALM265	Alarm detail number in alarm history: 5th alarm in past	-	○	○	○
ALM266	Alarm detail number in alarm history: 6th alarm in past	-	○	○	○
ALM267	Alarm detail number in alarm history: 7th alarm in past	-	○	○	○
ALM268	Alarm detail number in alarm history: 8th alarm in past	-	○	○	○
ALM269	Alarm detail number in alarm history: 9th alarm in past	-	○	○	○
ALM270	Alarm detail number in alarm history: 10th alarm in past	-	○	○	○
ALM271	Alarm detail number in alarm history: 11th alarm in past	-	○	○	○
ALM272	Alarm detail number in alarm history: 12th alarm in past	-	○	○	○
ALM273	Alarm detail number in alarm history: 13th alarm in past	-	○	○	○
ALM274	Alarm detail number in alarm history: 14th alarm in past	-	○	○	○
ALM275	Alarm detail number in alarm history: 15th alarm in past	-	○	○	○
ALM280	Alarm occurrence time (year, month) in alarm history: most recent alarm	-	○	○	○
ALM281	Alarm occurrence time (year, month) in alarm history: 1st alarm in past	-	○	○	○
ALM282	Alarm occurrence time (year, month) in alarm history: 2nd alarm in past	-	○	○	○
ALM283	Alarm occurrence time (year, month) in alarm history: 3rd alarm in past	-	○	○	○
ALM284	Alarm occurrence time (year, month) in alarm history: 4th alarm in past	-	○	○	○
ALM285	Alarm occurrence time (year, month) in alarm history: 5th alarm in past	-	○	○	○
ALM286	Alarm occurrence time (year, month) in alarm history: 6th alarm in past	-	○	○	○
ALM287	Alarm occurrence time (year, month) in alarm history: 7th alarm in past	-	○	○	○
ALM288	Alarm occurrence time (year, month) in alarm history: 8th alarm in past	-	○	○	○
ALM289	Alarm occurrence time (year, month) in alarm history: 9th alarm in past	-	○	○	○
ALM290	Alarm occurrence time (year, month) in alarm history: 10th alarm in past	-	○	○	○
ALM291	Alarm occurrence time (year, month) in alarm history: 11th alarm in past	-	○	○	○
ALM292	Alarm occurrence time (year, month) in alarm history: 12th alarm in past	-	○	○	○
ALM293	Alarm occurrence time (year, month) in alarm history: 13th alarm in past	-	○	○	○
ALM294	Alarm occurrence time (year, month) in alarm history: 14th alarm in past	-	○	○	○
ALM295	Alarm occurrence time (year, month) in alarm history: 15th alarm in past	-	○	○	○
ALM300	Alarm occurrence time (date, hour) in alarm history: most recent alarm	-	○	○	○
ALM301	Alarm occurrence time (date, hour) in alarm history: 1st alarm in past	-	○	○	○
ALM302	Alarm occurrence time (date, hour) in alarm history: 2nd alarm in past	-	○	○	○
ALM303	Alarm occurrence time (date, hour) in alarm history: 3rd alarm in past	-	○	○	○
ALM304	Alarm occurrence time (date, hour) in alarm history: 4th alarm in past	-	○	○	○

Virtual device name	Name	Symbol	MR-J5-G(-RJ), MR-J5W□-G	MR-JET-G	MR-J5D□-G
ALM305	Alarm occurrence time (date, hour) in alarm history: 5th alarm in past	-	○	○	○
ALM306	Alarm occurrence time (date, hour) in alarm history: 6th alarm in past	-	○	○	○
ALM307	Alarm occurrence time (date, hour) in alarm history: 7th alarm in past	-	○	○	○
ALM308	Alarm occurrence time (date, hour) in alarm history: 8th alarm in past	-	○	○	○
ALM309	Alarm occurrence time (date, hour) in alarm history: 9th alarm in past	-	○	○	○
ALM310	Alarm occurrence time (date, hour) in alarm history: 10th alarm in past	-	○	○	○
ALM311	Alarm occurrence time (date, hour) in alarm history: 11th alarm in past	-	○	○	○
ALM312	Alarm occurrence time (date, hour) in alarm history: 12th alarm in past	-	○	○	○
ALM313	Alarm occurrence time (date, hour) in alarm history: 13th alarm in past	-	○	○	○
ALM314	Alarm occurrence time (date, hour) in alarm history: 14th alarm in past	-	○	○	○
ALM315	Alarm occurrence time (date, hour) in alarm history: 15th alarm in past	-	○	○	○

*1 Set [Data Type] and [Format] as shown below for the objects for which this device is set.
[Data Type]: [Unsigned BIN32]
[Format]: [Hexadecimal]

■ Specifications of ALM260 to ALM275, ALM280 to ALM295, and ALM300 to ALM315 ([MELSERVO-J5(W)-*G(-RJ), -JET-*G])

The date and time of alarm occurrence are stored in BCD code in the upper eight bits and lower eight bits of each device.

The time zone setting of the controller is applied to the date and time to be acquired.

Example) When the date and time of the most recent alarm occurrence is 15:30:20 May 15, 2020

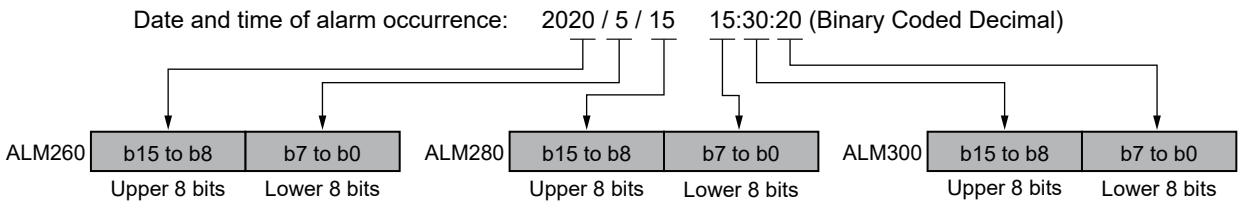

When the date and time of alarm occurrence are those of 1999 or earlier, 0 is displayed.

■Point table (position) ([MELSERVO-J5(W)-*G(-RJ), -JET-*G])

Use an appropriate device according to the write destination of the servo amplifier.

- POS1 to POS255: Writing data to the RAM of a servo amplifier
- POS1001 to POS1255: Writing data to the FlashROM or EEPROM of a servo amplifier

○: Available

×: Not available

Virtual device name	Name	Symbol	MR-J5-G(-RJ), MR-J5W□-G	MR-JET-G	MR-J5D□-G
POS1 to POS255, POS1001 to POS1255	Point table/position data No. 1 to No. 255	-	○	○	○

■Point table (speed) ([MELSERVO-J5(W)-*G(-RJ), -JET-*G])

Use an appropriate device according to the write destination of the servo amplifier.

- SPD1 to SPD255: Writing data to the RAM of a servo amplifier
- SPD1001 to SPD1255: Writing data to the FlashROM or EEPROM of a servo amplifier

○: Available

×: Not available

Virtual device name	Name	Symbol	MR-J5-G(-RJ), MR-J5W□-G	MR-JET-G	MR-J5D□-G
SPD1 to SPD255, SPD1001 to SPD1255	Point table/speed data No. 1 to No. 255	-	○	○	○

■Point table (acceleration time constant) ([MELSERVO-J5(W)-*G(-RJ), -JET-*G])

Use an appropriate device according to the write destination of the servo amplifier.

- ACT1 to ACT255: Writing data to the RAM of a servo amplifier
- ACT1001 to ACT1255: Writing data to the FlashROM or EEPROM of a servo amplifier

○: Available

×: Not available

Virtual device name	Name	Symbol	MR-J5-G(-RJ), MR-J5W□-G	MR-JET-G	MR-J5D□-G
ACT1 to ACT255, ACT1001 to ACT1255	Point table/acceleration time constant No. 1 to No. 255	-	○	○	○

■Point table (deceleration time constant) ([MELSERVO-J5(W)-*G(-RJ), -JET-*G])

Use an appropriate device according to the write destination of the servo amplifier.

- DCT1 to DCT255: Writing data to the RAM of a servo amplifier
- DCT1001 to DCT1255: Writing data to the FlashROM or EEPROM of a servo amplifier

○: Available

×: Not available

Virtual device name	Name	Symbol	MR-J5-G(-RJ), MR-J5W□-G	MR-JET-G	MR-J5D□-G
DCT1 to DCT255, DCT1001 to DCT1255	Point table/deceleration time constant No. 1 to No. 255	-	○	○	○

■Point table (dwell) ([MELSERVO-J5(W)-*G(-RJ), -JET-*G])

Use an appropriate device according to the write destination of the servo amplifier.

- DWL1 to DWL255: Writing data to the RAM of a servo amplifier
- DWL1001 to DWL1255: Writing data to the FlashROM or EEPROM of a servo amplifier

○: Available

×: Not available

Virtual device name	Name	Symbol	MR-J5-G(-RJ), MR-J5W□-G	MR-JET-G	MR-J5D□-G
DWL1 to DWL255, DWL1001 to DWL1255	Point table/dwell No. 1 to No. 255	-	○	○	○

■Point table (auxiliary function) ([MELSERVO-J5(W)-*G(-RJ), -JET-*G])

Use an appropriate device according to the write destination of the servo amplifier.

- AUX1 to AUX255: Writing data to the RAM of a servo amplifier
- AUX1001 to AUX1255: Writing data to the FlashROM or EEPROM of a servo amplifier

○: Available

×: Not available

Virtual device name	Name	Symbol	MR-J5-G(-RJ), MR-J5W□-G	MR-JET-G	MR-J5D□-G
AUX1 to AUX255, AUX1001 to AUX1255	Point table/auxiliary function No. 1 to No. 255	-	○	○	○

■Point table (M code) ([MELSERVO-J5(W)-*G(-RJ), -JET-*G])

Use an appropriate device according to the write destination of the servo amplifier.

- MCD1 to MCD255: Writing data to the RAM of a servo amplifier
- MCD1001 to MCD1255: Writing data to the FlashROM or EEPROM of a servo amplifier

○: Available

×: Not available

Virtual device name	Name	Symbol	MR-J5-G(-RJ), MR-J5W□-G	MR-JET-G	MR-J5D□-G
MCD1 to MCD255, MCD1001 to MCD1255	Point table/M code No. 1 to No. 255	-	○	○	○

A

■Machine diagnosis data ([MELSERVO-J5(W)-*G(-RJ), -JET-*G])

○: Available

×: Not available

Virtual device name	Name	Symbol	MR-J5-G(-RJ), MR-J5W□-G	MR-JET-G	MR-J5D□-G
MD0	Machine diagnosis data: Station number	-	○	○	○
MD1	Machine diagnosis data shift judgment(test mode)	-	○	○	○
MD2*1	Machine diagnosis data status	-	○	○	○
MD3*2	Machine diagnosis data coulomb friction torque in positive direction	-	○	○	○
MD4*2	Machine diagnosis data friction torque at rated speed in positive direction	-	○	○	○
MD5*2	Machine diagnosis data coulomb friction torque in negative direction	-	○	○	○
MD6*2	Machine diagnosis data friction torque at rated speed in negative direction	-	○	○	○
MD7*2	Machine diagnosis data oscillation frequency(motor is stopped)	-	○	○	○
MD8*2	Machine diagnosis data vibration level(motor is stopped)	-	○	○	○
MD9*2	Machine diagnosis data oscillation frequency(motor is operating)	-	○	○	○
MD10*2	Machine diagnosis data vibration level(motor is operating)	-	○	○	○
MD11	Machine diagnosis data, rated speed at forward or reverse rotation torque	-	○	○	○
MD12	Machine diagnosis data: friction failure prediction - threshold creation progress	-	○	○*3	○
MD13	Machine diagnosis data: vibration failure prediction - threshold creation progress	-	○	○*3	○
MD14	Machine diagnosis data motor total move distance	-	○	○*3	○
MD15	Machine diagnosis data, friction failure prediction, upper threshold at forward rotation torque, lower threshold at reverse rotation torque	-	○	○*3	○
MD16	Machine diagnosis data, friction failure prediction, lower threshold at forward rotation torque, upper threshold at reverse rotation torque	-	○	○*3	○
MD17	Machine diagnosis data: vibration failure prediction - threshold acquisition	-	○	○*3	○
MD18	Machine diagnosis data trouble prediction status	-	○	○*3	○
MD19	Machine diagnosis data: Belt tension estimation value	-	○	○*3	○
MD20	Machine diagnosis data: static friction used in failure prediction	-	○	○*3	○
MD21	Machine diagnosis data: Belt tension threshold estimation	-	○	○*3	○

*1 While the servo amplifier is estimating the corresponding machine status in the machine diagnosis, do not write data to the parameters of the servo amplifier from another GOT.
Doing so may cause the servo amplifier to malfunction.

*2 When MD2 indicates that the servo amplifier does not complete the machine diagnosis (is estimating or warning of the machine status), do not monitor MD3 to MD6 (friction states) and MD7 to MD10 (vibration/oscillation states).
To start monitoring those devices upon the estimation completion, set [Trigger] in the applicable object settings.

*3 The commands assigned to MD12 to MD21 are not supported by MR-JET-G.
When the commands are used, the read values will be indefinite.

■One-touch tuning data ([MELSERVO-J5(W)-*G(-RJ), -JET-*G])

○: Available

×: Not available

Virtual device name	Name	Symbol	MR-J5-G(-RJ), MR-J5W□-G	MR-JET-G	MR-J5D□-G
OTS0	One-touch tuning status confirmation	-	○	○	○
OTS1	Error code list	-	○	○	○
OTS2	Setting time	-	○	○	○
OTS3	Overshoot amount	-	○	○	○
OTS4	One-touch tuning command mode	-	○	○	○
OTS5	Load inertia moment ratio	-	○	○	○
OTS3000*1	Read/write permissible move distance	-	○	○	○

*1 Writing is not available when a negative value is set for the device value.

■External input signal in MR-J5-G(-RJ) and MR-J5W□-G ([MELSERVO-J5(W)-*G(-RJ), -JET-*G])

Virtual device name	Name	Symbol	Data to be read from the servo amplifier
DI0	Input device statuses	-	The input device statuses corresponding to the setting values 0000 to 001F of the following are read. Pr. PF91_Drive recorder Digital channel setting 1 (DRDC1)
DI1	Input device statuses	-	The input device statuses corresponding to the setting values 0020 to 003F of the following are read. Pr. PF91_Drive recorder Digital channel setting 1 (DRDC1)
DI2	Input device statuses	-	The input device statuses corresponding to the setting values 0040 to 005F of the following are read. Pr. PF91_Drive recorder Digital channel setting 1 (DRDC1)
DI3	External input pin statuses	-	The statuses of the listed input devices are assigned to the bits in order from bit 0 and read. For details on the input devices, refer to the following. 📖MR-J5 User's Manual (Hardware)
DI4	Statuses of input devices switched on through communication	-	The statuses of the input devices switched on through communication (input device statuses corresponding to the setting values 0000 to 001F of the following) are read. Pr. PF91_Drive recorder Digital channel setting 1 (DRDC1)
DI5	Statuses of input devices switched on through communication	-	The statuses of input devices switched on through communication (input device statuses corresponding to the setting values 0020 to 003F of the following) are read. Pr. PF91_Drive recorder Digital channel setting 1 (DRDC1)
DI6	Statuses of input devices switched on through communication	-	The input device statuses switched on through communications (input device statuses corresponding to the setting values 0040 to 005F of the following) are read. Pr. PF91_Drive recorder Digital channel setting 1 (DRDC1)

A

■External input signal in MR-J5D□-G ([MELSERVO-J5(W)-*G(-RJ), -JET-*G])

Virtual device name	Name	Symbol	Data to be read from the servo amplifier
DI0	Input device statuses	-	The input device statuses corresponding to the setting values 0000 to 001F of the following are read. Pr. PF91_Drive recorder Digital channel setting 1 (DRDC1)
DI1	Input device statuses	-	The input device statuses corresponding to the setting values 0020 to 003F of the following are read. Pr. PF91_Drive recorder Digital channel setting 1 (DRDC1)
DI2	Input device statuses	-	The input device statuses corresponding to the setting values 0040 to 005F of the following are read. Pr. PF91_Drive recorder Digital channel setting 1 (DRDC1)
DI3	External input pin statuses	-	The statuses of the listed input devices are assigned to the bits in order from bit 0 and read. For details on the input devices, refer to the following. 📖MR-J5 User's Manual (Hardware)
DI4	Statuses of input devices switched on through communication	-	The statuses of the input devices switched on through communication (input device statuses corresponding to the setting values 0000 to 001F of the following) are read. Pr. PF91_Drive recorder Digital channel setting 1 (DRDC1)
DI5	Statuses of input devices switched on through communication	-	The statuses of input devices switched on through communication (input device statuses corresponding to the setting values 0020 to 003F of the following) are read. Pr. PF91_Drive recorder Digital channel setting 1 (DRDC1)
DI6	Statuses of input devices switched on through communication	-	The input device statuses switched on through communications (input device statuses corresponding to the setting values 0040 to 005F of the following) are read. Pr. PF91_Drive recorder Digital channel setting 1 (DRDC1)

■External input signal in MR-JET-G ([MELSERVO-J5(W)-*G(-RJ), -JET-*G])

Virtual device name	Name	Symbol
DI0	Input device statuses	-
DI1	Input device statuses	-
DI2	Input device statuses	-
DI3	External input pin statuses	-
DI4	Statuses of input devices switched on through communication	-
DI5	Statuses of input devices switched on through communication	-
DI6	Statuses of input devices switched on through communication	-

■External output signal in MR-J5-G(-RJ) and MR-J5W□-G ([MELSERVO-J5(W)-*G(-RJ), -JET-*G])

Virtual device name	Name	Symbol	Data to be read from the servo amplifier
DO0	Output device statuses	-	The output device statuses corresponding to the setting values 8000 to 801F of the following are read. Pr. PF91_Drive recorder Digital channel setting 1 (DRDC1)
DO1	Output device statuses	-	The output device statuses corresponding to the setting values 8020 to 803F of the following are read. Pr. PF91_Drive recorder Digital channel setting 1 (DRDC1)
DO2	Output device statuses	-	The output device statuses corresponding to the setting values 8040 to 805F of the following are read. Pr. PF91_Drive recorder Digital channel setting 1 (DRDC1)
DO4	External output pin statuses	-	The statuses of the listed output devices are assigned to the bits in order from bit 0 and read. For details on the output devices, refer to the following. 📖MR-J5 User's Manual (Hardware)

■External output signal in MR-J5D□-G ([MELSERVO-J5(W)-*G(-RJ), -JET-*G])

Virtual device name	Name	Symbol	Data to be read from the servo amplifier
DO0	Output device statuses	-	The output device statuses corresponding to the setting values 8000 to 801F of the following are read. Pr. PF91_Drive recorder Digital channel setting 1 (DRDC1)
DO1	Output device statuses	-	The output device statuses corresponding to the setting values 8020 to 803F of the following are read. Pr. PF91_Drive recorder Digital channel setting 1 (DRDC1)
DO2	Output device statuses	-	The output device statuses corresponding to the setting values 8040 to 805F of the following are read. Pr. PF91_Drive recorder Digital channel setting 1 (DRDC1)
DO4	External output pin statuses	-	The statuses of the listed output devices are assigned to the bits in order from bit 0 and read. For details on the output devices, refer to the following. 📖MR-J5 User's Manual (Hardware)

■External output signal in MR-JET-G ([MELSERVO-J5(W)-*G(-RJ), -JET-*G])

Virtual device name	Name	Symbol
DO0	Output device statuses	-
DO1	Output device statuses	-
DO2	Output device statuses	-
DO4	External output pin statuses	-

■Option unit parameter ([MELSERVO-J5(W)-*G(-RJ), -JET-*G])

Use an appropriate device according to the write destination of the servo amplifier.

- PO1 to PO2: Writing data to the RAM of a servo amplifier
- PO1001 to PO1002: Writing data to the FlashROM or EEPROM of a servo amplifier

○: Available

×: Not available

Virtual device name	Name	Symbol	MR-J5-G(-RJ), MR-J5W□-G	MR-JET-G	MR-J5D□-G
PO1 to PO2, PO1001 to P1002	For manufacturer setting	-	×	×	×

■Special parameter ([MELSERVO-J5(W)-*G(-RJ), -JET-*G])

Use an appropriate device according to the write destination of the servo amplifier.

- PS1 to PS99: Writing data to the RAM of a servo amplifier
- PS1001 to PS1099: Writing data to the FlashROM or EEPROM of a servo amplifier

○: Available

×: Not available

Virtual device name	Name	Symbol	MR-J5-G(-RJ), MR-J5W□-G	MR-JET-G	MR-J5D□-G
PS1 to PS99, PS1001 to PS1099	For manufacturer setting	-	×	×	×

■Linear servo motor/DD motor setting parameters ([MELSERVO-J5(W)-*G(-RJ), -JET-*G])

Use an appropriate device according to the write destination of the servo amplifier.

- PL1 to PL72: Writing data to the RAM of a servo amplifier
- PL1001 to PL1072: Writing data to the FlashROM or EEPROM of a servo amplifier

For the parameters prefixed by an asterisk (*), setting becomes effective when the power is turned off once and back on after setting the parameter data.

○: Available

×: Not available

Virtual device name	Name	Symbol	MR-J5-G(-RJ), MR-J5W□-G	MR-JET-G	MR-J5D□-G
PL1, PL1001	Function selection L-1	**LIT1	○	×	○
PL2, PL1002	Linear encoder resolution setting Numerator	**LIM	○	×	○
PL3, PL1003	Linear encoder resolution setting Denominator	**LID	○	×	○
PL4, PL1004	Function selection L-2	*LIT2	○	×	○
PL5, PL1005	Position deviation error detection level	LB1	○	×	○
PL6, PL1006	Speed deviation error detection level	LB2	○	×	○
PL7, PL1007	Torque deviation error detection level	LB3	○	×	○
PL8, PL1008	Function selection L-3	*LIT3	○	×	○
PL9, PL1009	Magnetic pole detection voltage level	LPWM	○	×	○
PL10 to PL16, PL1010 to PL1016	For manufacturer setting	-	×	×	×
PL17, PL1017	Mag. pole detn. - Min. pos. detn. meth. - Func. sel.	LTSTS	○	×	○
PL18, PL1018	Mag.pole detn.-Min.pos.detn.meth.-Ident.sig.amp.	IDLV	○	×	○
PL19 to PL72, PL1019 to PL1072	For manufacturer setting	-	×	×	×

■Multi encoder parameter ([MELSERVO-J5(W)-*G(-RJ), -JET-*G])

Use an appropriate device according to the write destination of the servo amplifier.

- PU1 to PU44: Writing data to the RAM of a servo amplifier
- PU1001 to PU1044: Writing data to the FlashROM or EEPROM of a servo amplifier

○: Available

×: Not available

Virtual device name	Name	Symbol	MR-J5-G(-RJ), MR-J5W□-G	MR-JET-G	MR-J5D□-G
PU1 to PU44, PU1001 to PU1044	For manufacturer setting	-	×	×	×

■Positioning control parameters ([MELSERVO-J5(W)-*G(-RJ), -JET-*G])

Use an appropriate device according to the write destination of the servo amplifier.

- PVS1 to PVS32: Writing data to the RAM of a servo amplifier
- PVS1001 to PVS1032: Writing data to the FlashROM or EEPROM of a servo amplifier

For the parameters prefixed by an asterisk (*), setting becomes effective when the power is turned off once and back on after setting the parameter data.

○: Available

×: Not available

Virtual device name	Name	Symbol	MR-J5-G(-RJ), MR-J5W□-G	MR-JET-G	MR-J5D□-G
PVS1, PVS1001	Profile speed command extension setting	PVC2	○	×	○
PVS2, PVS1002	For manufacturer setting	-	×	×	×
PVS3, PVS1003	Maximum profile speed extension setting	MPVCE	○	×	○
PVS4, PVS1004	For manufacturer setting	-	×	×	×
PVS5, PVS1005	Profile acceleration	PACC	○	×	○
PVS6, PVS1006	For manufacturer setting	-	×	×	×
PVS7, PVS1007	Profile deceleration	PDEC	○	×	○
PVS8, PVS1008	For manufacturer setting	-	×	×	×
PVS9, PVS1009	Forced stop deceleration	RSBDEC	○	○	○
PVS10, PVS1010	For manufacturer setting	-	×	×	×
PVS11, PVS1011	Home position return speed extension setting	ZRFE	○	○	○
PVS12, PVS1012	For manufacturer setting	-	×	×	×
PVS13, PVS1013	Creep speed extension setting	CRFE	○	○	○
PVS14, PVS1014	For manufacturer setting	-	×	×	×
PVS15, PVS1015	Home position return acceleration	HMACC	○	○	○
PVS16, PVS1016	For manufacturer setting	-	×	×	×
PVS17, PVS1017	Home position return deceleration	HMDEC	○	○	○
PVS18, PVS1018	For manufacturer setting	-	×	×	×
PVS19, PVS1019	Speed reached 2 output range extension setting	SA2RE	○	×	○
PVS20, PVS1020	Zero speed 2 level extension setting	ZSP2LE	○	×	○
PVS21, PVS1021	Speed limit extension setting	VLMTE	○	○	○
PVS22, PVS1022	For manufacturer setting	-	×	×	×
PVS23, PVS1023	Speed unit conversion electronic gear numerator	*VCMX	○	○	○
PVS24, PVS1024	Speed unit conversion electronic gear denominator	*VCDV	○	○	○
PVS25, PVS1025	Acceleration unit conversion electronic gear nmrtr.	*ACMX	○	○	○
PVS26, PVS1026	Acceleration unit conversion electronic gear dnmntr.	*ACDV	○	○	○
PVS27 to PVS28, PVS1027 to PVS1028	For manufacturer setting	-	×	×	×
PVS29, PVS1029	Acceleration limit	ACCLMT	×	×	○
PVS30, PVS1030	For manufacturer setting	-	×	×	×
PVS31, PVS1031	Deceleration limit	DECLMT	×	×	○
PVS32, PVS1032	For manufacturer setting	-	×	×	×

A

■Network basic parameter ([MELSERVO-J5(W)-*G(-RJ), -JET-*G])

Set [Data Type] and [Format] as shown below for the objects for which this device is set.

- [Data Type]: [Unsigned BIN32]
- [Format]: [Hexadecimal]

○: Available

×: Not available

Virtual device name	Name	Symbol	MR-J5-G(-RJ), MR-J5W□-G	MR-JET-G	MR-J5D□-G
NPA1	IP address setting	-	○	○	○
NPA2	IP address	-	○	○	○
NPA3	For manufacturer setting	-	×	×	×
NPA4	Subnet mask	-	○	○	○
NPA5 to NPA7	For manufacturer setting	-	×	×	×
NPA8	Host name	-	○	○	○
NPA9 to NPA11	For manufacturer setting	-	×	×	×
NPA12	Communication speed	-	×	×	○
NPA2001 to NPA2032	Host name expansion area	-	○	○	○

■Gear failure diagnosis data ([MELSERVO-J5(W)-*G(-RJ), -JET-*G])

○: Available

×: Not available

Virtual device name	Name	Symbol	MR-J5-G(-RJ), MR-J5W□-G	MR-JET-G	MR-J5D□-G
GFDS0	Backlash estimation (threshold)	-	○	×	○
GFDS1	Backlash estimation (estimation value)	-	○	×	○
GFDS2	Backlash estimation (estimation progress)	-	○	×	○
GFDS3	Backlash estimation (status)	-	○	×	○
GFDS4	Backlash error number	-	○	×	○
GFDS5	Backlash estimation move distance	-	○	×	○

■Encoder communication circuit diagnosis data ([MELSERVO-J5(W)-*G(-RJ), -JET-*G])

○: Available

×: Not available

Virtual device name	Name	Symbol	MR-J5-G(-RJ), MR-J5W□-G	MR-JET-G	MR-J5D□-G
ECCDS0	CN2 encoder communication circuit diagnosis possibility	-	○	○	○
ECCDS1	CN2L encoder communication circuit diagnosis possibility	-	○	○	○
ECCDS2	CN2 encoder communication circuit diagnosis status	-	○	○	○
ECCDS3	CN2L encoder communication circuit diagnosis status	-	○	○	○
ECCDS4	CN2 encoder communication circuit diagnosis result	-	○	○	○
ECCDS5	CN2L encoder communication circuit diagnosis result	-	○	○	○

■Life Diagnosis ([MELSERVO-J5(W)-*G(-RJ), -JET-*G])

○: Available

×: Not available

Virtual device name	Name	Symbol	MR-J5-G(-RJ), MR-J5W□-G	MR-JET-G	MR-J5D□-G
ALD0	Cumulative power-on time	-	○	○	○
ALD1	Number of inrush current switching times	-	○	○	○

■Input signal for test operation (for test operation) ([MELSERVO-J5(W)-*G(-RJ), -JET-*G])

○: Available

×: Not available

Virtual device name	Name	Symbol	MR-J5-G(-RJ), MR-J5W□-G	MR-JET-G	MR-J5D□-G
TMI0	Input signal for test operation 1	-	○	○	○
TMI1	Input signal for test operation 2	-	○	○	○
TMI2	For manufacturer setting	-	×	×	×

When using the input signal for test operation (for test operation), note the following.

Precautions	Description
Writing a value to a virtual device using an object	Numerical input cannot be used. Use a word switch for writing.

■Forced output of signal pin (for test operation) ([MELSERVO-J5(W)-*G(-RJ), -JET-*G])

○: Available

×: Not available

Virtual device name	Name	Symbol	MR-J5-G(-RJ), MR-J5W□-G	MR-JET-G	MR-J5D□-G
TMO0	Forced output from signal pin	-	○	○	○

When using the forced output of signal pin (for test operation), note the following.

Precautions	Description
Writing a value to a virtual device using an object	Numerical input cannot be used. Use a word switch for writing.

■Set data (for test operation) ([MELSERVO-J5(W)-*G(-RJ), -JET-*G])

○: Available

×: Not available

Virtual device name	Name	Symbol	MR-J5-G(-RJ), MR-J5W□-G	MR-JET-G	MR-J5D□-G
TMD0	Motor speed	-	○	○	○
TMD1	Write acceleration/deceleration time constant	-	○	○	○
TMD3	Move distance	-	○	○	○

Precautions for virtual servo amplifier devices ([MELSERVO-J5(W)-*G(-RJ), -JET-*G])

For the precautions for virtual servo amplifier devices, refer to the following.

☞ Page 1468 Precautions for virtual servo amplifier devices ([MELSEC iQ-R, RnMT/NC/RT, CR800-D], [MELSEC iQ-R, RnMT/RT, CR800-D])

[FREQROL 500/700/800, SENSORLESS SERVO]

GT27 GT25 GT23 GT21 GS25 GS21

Item	Reference
Specifications of bit devices	☞ Page 1708 Monitoring-supported bit devices ([FREQROL 500/700/800, SENSORLESS SERVO])
	☞ Page 1708 Availability of writing/reading data to/from bit devices ([FREQROL 500/700/800, SENSORLESS SERVO])
Specifications of word devices	☞ Page 1709 Monitoring-supported word devices ([FREQROL 500/700/800, SENSORLESS SERVO])
	☞ Page 1709 Availability of writing/reading data to/from word devices ([FREQROL 500/700/800, SENSORLESS SERVO])
Specifications of virtual inverter devices	☞ Page 1710 Virtual inverter devices ([FREQROL 500/700/800, SENSORLESS SERVO])

Monitoring-supported bit devices ([FREQROL 500/700/800, SENSORLESS SERVO])

The following table shows monitoring-supported virtual bit devices for inverters.

To check whether writing/reading data to/from each device is available, refer to the following.

☞ Page 1708 Availability of writing/reading data to/from bit devices ([FREQROL 500/700/800, SENSORLESS SERVO])

For details on virtual inverter devices, refer to the following.

☞ Page 1710 Virtual inverter devices ([FREQROL 500/700/800, SENSORLESS SERVO])

○: Available

×: Not available

Device name		Device No. representation	Setting range	Specifications of EG devices*1	
				Assignment to EG devices	Access using a client
RS	Inverter status monitor	Decimal	0 to 15	×	×
WS	Operation command	Decimal	0 to 15	×	×

*1 For the devices assigned to EG devices (gateway devices) and the compatible clients, refer to the following.
📖GT Designer3 (GOT2000) Screen Design Manual

Availability of writing/reading data to/from bit devices ([FREQROL 500/700/800, SENSORLESS SERVO])

The following shows whether writing/reading data to/from bit devices is available by device type.

When the device type is other than the bit type, set the device No. in multiples of 16.

R/W: Both read and write

R/-: Read only

-/W: Write only

-/-: No read/write access

Device name	Device type				
	Bit	Byte (8 bits)	Word (16 bits)	Double-word (32 bits)	Quad-word (64 bits)
RS	R/-	-/-	-/-	-/-	-/-
WS	-/W	-/-	-/-	-/-	-/-

Monitoring-supported word devices ([FREQROL 500/700/800, SENSORLESS SERVO])

The following table shows monitoring-supported virtual word devices for inverters.

To check whether writing/reading data to/from each device is available, refer to the following.

☞ Page 1709 Availability of writing/reading data to/from word devices ([FREQROL 500/700/800, SENSORLESS SERVO])

For details on virtual inverter devices, refer to the following.

☞ Page 1710 Virtual inverter devices ([FREQROL 500/700/800, SENSORLESS SERVO])

○: Available

×: Not available

Device name		Device No. representation	Setting range	Specifications of EG devices*1	
				Assignment to EG devices	Access using a client
A	Alarm definition	Decimal	0 to 7	○	×
Pr	Parameter	Decimal	0 to 1500	○	×
PG	Program operation	Decimal	0 to 89	○	×
SP	Special parameter	Decimal	108 to 127	○	×

*1 For the devices assigned to EG devices (gateway devices) and the compatible clients, refer to the following.
GT Designer3 (GOT2000) Screen Design Manual

Availability of writing/reading data to/from word devices ([FREQROL 500/700/800, SENSORLESS SERVO])

The following shows the availability of writing/reading data to/from word devices by device type.

R/W: Both read and write

R/-: Read only

-/W: Write only

-/-: No read/write access

Device name	Device type			
	Word (16 bits)	Double-word (32 bits)	Quad-word (64 bits)	Bit of word data
A	R/-	-/-	-/-	-/-
Pr	R/W	-/-	-/-	-/-
PG	R/W	-/-	-/-	-/-
SP*1	R/W	-/-	-/-	-/-

*1 Only reading is available for SP111 to SP114.
Only writing is available for SP124 and SP125.

A

Virtual inverter devices ([FREQROL 500/700/800, SENSORLESS SERVO])

The following shows the correspondence between the virtual devices used in the GOT and the inverter data.

For details on the inverter parameters, refer to the following.

Manual of the inverter used

Virtual device name	Reference
RS	☞ Page 1710 Inverter status monitor ([FREQROL 500/700/800, SENSORLESS SERVO])
WS	☞ Page 1711 Operation command ([FREQROL 500/700/800, SENSORLESS SERVO])
	☞ Page 1712 Activating WS devices ([FREQROL 500/700/800, SENSORLESS SERVO])
A	☞ Page 1713 Alarm definition ([FREQROL 500/700/800, SENSORLESS SERVO])
Pr	☞ Page 1713 Parameter ([FREQROL 500/700/800, SENSORLESS SERVO])
PG	☞ Page 1714 Programmed operation ([FREQROL 500/700/800, SENSORLESS SERVO])
SP	☞ Page 1715 Special parameter ([FREQROL 500/700/800, SENSORLESS SERVO])
	☞ Page 1716 Specifications of SP122 and SP121([FREQROL 500/700/800, SENSORLESS SERVO])

■Inverter status monitor ([FREQROL 500/700/800, SENSORLESS SERVO])

The settable devices vary by inverter model.

For the settable devices of each inverter, refer to the following.

Manual of the inverter used

Parameter settings may have been changed in the inverter.

To use the devices, check the parameters and set the parameters as required.

Example) When using the FR-A700 series

Virtual device name	Name
RS0	Inverter running (RUN)
RS1	Forward rotation (STF)
RS2	Reverse rotation (STR)
RS3	Up to frequency (SU)
RS4	Overload (OL)
RS5	Instantaneous power failure (IPF)
RS6	Frequency detection (FU)
RS7	Fault occurrence (ABC1)
RS8	ABC2
RS15	Fault occurrence

■Operation command ([FREQROL 500/700/800, SENSORLESS SERVO])

The settable devices vary by inverter model.

For the settable devices of each inverter, refer to the following.

📖Manual of the inverter used

Parameter settings may have been changed in the inverter.

To use the devices, check the parameters and set the parameters as required.

Example) When using the FR-A700 series

Virtual device name	Name
WS0	Current input selection (AU)
WS1	Forward rotation (STF)
WS2	Reverse rotation (STR)
WS3*1	Low speed operation (RL)
WS4*1	Middle speed operation (RM)
WS5*1	High speed operation (RH)
WS6*1	Second function selection (RT)
WS7*1	Output stop (MRS)
WS8*2	JOG operation (JOG)
WS9*2	Selection of automatic restart after instantaneous power failure (CS)
WS10*2	Start self-holding selection (STOP)
WS11*2	Reset (RES)

*1 When the GOT is connected to the PU connector and the operation mode is set to the PU operation mode, the multispeed operation (WS3 to WS7, SP121, SP122) cannot be used.
For using the multi-speed operation, follow either of the operations below.
Connect the GOT to the RS-485 terminal and set the operation mode to the NET operation mode (Computer link operation mode), and then operate the inverter.
Change the motor speed with the set frequency (SP109, SP110), and then operate the inverter with the forward or reverse rotation (WS1, WS2, SP121, SP122).

*2 The initial status is invalid.
The virtual device becomes operable by writing a value in the corresponding parameter shown below to change the signal.
WS8: Pr.185
WS9: Pr.186
WS10: Pr.188
WS11: Pr.189
For the relationship between the parameter values and signals, refer to the following.
📖Manual of the inverter used

When using the operation command, note the following.

Precautions	Description
When setting a device for a bit switch	Do not select [Alternate] for [Switch Action] of the bit switch.
When activating WS devices	☞ Page 1712 Activating WS devices ([FREQROL 500/700/800, SENSORLESS SERVO])

■Activating WS devices ([FREQROL 500/700/800, SENSORLESS SERVO])

More than one WS device cannot turn on at once.

Turning on one WS device turns off the other WS devices.

Use SP122 or SP121 to turn on multiple WS devices simultaneously.

☞ Page 1716 Specifications of SP122 and SP121([FREQROL 500/700/800, SENSORLESS SERVO])

The following shows the specifications of WS devices.

WS device	Specifications
WS0 to WS7	GOT's virtual devices corresponding to the inverter's operation commands (instruction code: HFA, bit length: 8 bits). 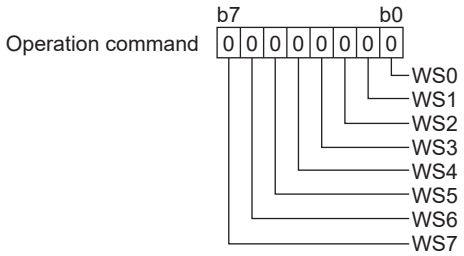 The function of each bit differs depending on the inverter. Example) A800 series inverter • WS0: AU (Terminal 4 input selection) • WS1: Forward rotation command • WS2: Reverse rotation command • WS3: RL (Low-speed operation command) • WS4: RM (Middle-speed operation command) • WS5: RH (High-speed operation command) • WS6: RT (Second function selection) • WS7: MRS (Output stop) When you turn on one of the WS0 to WS7 devices, the rest of these devices are turned off. Example) When you turn on WS1 WS0 and WS2 to WS7 are turned off.
WS8 to WS15	WS8 to WS11 are GOT's virtual devices corresponding to the inverter's operation commands (extended) (instruction code: HF9, bit length: 16 bits). 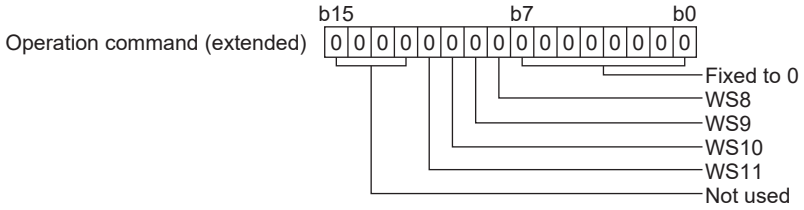 The function of each bit differs depending on the inverter. Example) A800 series inverter • WS8: JOG (Jog operation selection) • WS9: CS (Selection of automatic restart after instantaneous power failure, flying start) • WS10: STOP (Start self-holding selection) • WS11: RES (Inverter reset) Turning on a device out of WS8 to WS11 turns off WS0 to WS15 except the one that is turned on. Example) When you turn on WS9 WS0 to WS8 and WS10 to WS15 are turned off.

■Alarm definition ([FREQROL 500/700/800, SENSORLESS SERVO])

The settable devices vary by inverter model.

For the settable devices of each inverter, refer to the following.

📖Manual of the inverter used

Virtual device name	Name
A0	Second fault in past
A1	Latest fault
A2	Fourth fault in past
A3	Third fault in past
A4	Sixth fault in past
A5	Fifth fault in past
A6	Eighth fault in past
A7	Seventh fault in past

■Parameter ([FREQROL 500/700/800, SENSORLESS SERVO])

The virtual device numbers (Pr) used in the GOT correspond to the inverter parameter numbers.

For the inverter parameters, refer to the following.

📖Manual of the inverter used

When using a parameter, note the following.

Precautions	Description
When creating a screen using a parameter (Pr)	Specify a PG device (Programmed operation) or Pr device (Parameter). Do not specify PG devices (PG0 to PG89) and Pr devices (Pr900 to Pr905) together on one screen.
When setting 8888 or 9999 to a parameter (Pr) of an inverter	Values 8888 and 9999 are used for particular purposes. To set these values to inverter parameters, write the following values to the GOT virtual device. • To set 8888: 65520 • To set 9999: 65535
When specifying Pr900 to Pr933 (Calibration parameter) or Pr934 and Pr935 (PID display)	If you specify Pr900 to Pr933 (Calibration parameter), or Pr934 and Pr935 (PID display), whether the value below must be written to SP108 (Second parameter changing) depends on the specified device number and inverter model. • H00: Offset/gain • H01: Analog • H02: Analog value at terminal
Parameters that cannot be monitored	The GOT cannot monitor the parameter (Pr.37) of FR-E500, FR-S500(E), FR-F500J, FR-D700, FR-F700PJ, and FR-E700 series.

■Programmed operation ([FREQROL 500/700/800, SENSORLESS SERVO])

The virtual devices below correspond to the parameters (Pr.201 to Pr.230) of the FR-A500 series.

Virtual device name	Name
PG0 to PG9	Program set 1 (running frequency)
PG10 to PG19*1	Program set 1 (time)
PG20 to PG29	Program set 1 (rotation direction)
PG30 to PG39	Program set 2 (running frequency)
PG40 to PG49*1	Program set 2 (time)
PG50 to PG59	Program set 2 (rotation direction)
PG60 to PG69	Program set 3 (running frequency)
PG70 to PG79*1	Program set 3 (time)
PG80 to PG89	Program set 3 (rotation direction)

*1 To set the start time (PG10 to PG19, PG40 to PG49, PG70 to PG79), set hour or minute in the upper 8 bits, and minute or second in the lower 8 bits.
Example) To set 12 minutes 35 seconds
Value written to the upper 8 bits: H0C (hexadecimal value of 12)
Value written to the lower 8 bits: H23 (hexadecimal value of 35)
Write H0C23 (decimal value of 3017) to the device.

When using the programmed operation, note the following.

Precautions	Description
When creating a screen using the programmed operation (PG)	Specify a PG device (Programmed operation) or Pr device (Parameter). Do not specify PG devices (PG0 to PG89) and Pr devices (Pr900 to Pr905) together on one screen.

■Special parameter ([FREQROL 500/700/800, SENSORLESS SERVO])

If the GOT reads or writes data from or to a virtual device (SP), the inverter's instruction code corresponding to the SP device is used for communication.

For instruction details, and values to be read and written, refer to the following.

📖Manual of the inverter used

Virtual device name	Name	Instruction code	
		Read	Writing
SP108	Second parameter changing	6CH	ECH
SP109*1	Set frequency (RAM)	6DH	EDH
SP110*1	Set frequency (RAM, EEPROM)	6EH	EEH
SP111*1	Output frequency	6FH	-
SP112	Output current	70H	-
SP113	Output voltage	71H	-
SP114	Special monitor	72H	-
SP115	Special monitor selection No.	73H	F3H
SP116	Faults history batch clear	-	F4H
	Latest fault, Second fault in past	74H	-
SP117	Third fault in past, Fourth fault in past	75H	-
SP118	Fifth fault in past, Sixth fault in past	76H	-
SP119	Seventh fault in past, Eighth fault in past	77H	-
SP121*2*3	Inverter status monitor (extended)	79H	F9H
	Operation command (extended)		
SP122*2*3	Inverter status monitor	7AH	-
	Operation command	-	FAH
SP123*4	Operation mode	7BH	FBH
SP124	All parameter clear	-	FCH
SP125	Inverter reset	-	FDH
SP127	Link parameter extended setting	7FH	FFH

*1 GOT cannot monitor SP109 to SP111 if the conditions below are satisfied at the same time.
(Only FR-E500/S500(E)/F500J/D700/F700PJ/E700 series)
Pr37 ≠ 0
SP127 = 1

*2 When the GOT is connected to the PU connector and the operation mode is set to the PU operation mode, the multispeed operation (WS3 to WS7, SP121, SP122) cannot be used.
For using the multi-speed operation, follow either of the operations below.
Connect the GOT to the RS-485 terminal and set the operation mode to the NET operation mode (Computer link operation mode), and then operate the inverter.
Change the motor speed with the set frequency (SP109, SP110), and then operate the inverter with the forward or reverse rotation (WS1, WS2, SP121, SP122).

*3 For the specifications of SP122 and SP121, refer to the following.
☞ Page 1716 Specifications of SP122 and SP121([FREQROL 500/700/800, SENSORLESS SERVO])

*4 If the GOT is connected to the PU port of the FR-A500/E500/F500 (excluding the FR-F500J), the connected inverter is in the external operation mode at power-on.
To change parameters from the GOT, change the value of SP123 to 2 (PU operation mode) in advance.

■Specifications of SP122 and SP121([FREQROL 500/700/800, SENSORLESS SERVO])

SP122 and SP121 are the GOT's virtual devices corresponding to the inverter's ordinary and extended operation commands. The following shows the specifications of SP122 and SP121.

SP device	Specifications
SP122	GOT's virtual device corresponding to the inverter's operation command (instruction code: HFA, bit length: 8 bits). The function of each bit differs depending on the inverter. Example) A800 series inverter • SP122.b0: AU (Terminal 4 input selection) • SP122.b1: Forward rotation command • SP122.b2: Reverse rotation command • SP122.b3: RL (Low-speed operation command) • SP122.b4: RM (Middle-speed operation command) • SP122.b5: RH (High-speed operation command) • SP122.b6: RT (Second function selection) • SP122.b7: MRS (Output stop) To send more than one command simultaneously, convert the binary value of the bits to be turned on to a decimal value, and write the decimal value to SP122. Example) Sending forward rotation command and RL (Low-speed operation command) simultaneously Binary: 00001010 Decimal: 10 Write 10 to SP122.
SP121	GOT's virtual devices corresponding to the inverter's operation commands (extended) (instruction code: HF9, bit length: 16 bits). The function of each bit differs depending on the inverter. Example) A800 series inverter • SP121.b0: AU (Terminal 4 input selection) • SP121.b1: Forward rotation command • SP121.b2: Reverse rotation command • SP121.b3: RL (Low-speed operation command) • SP121.b4: RM (Middle-speed operation command) • SP121.b5: RH (High-speed operation command) • SP121.b6: RT (Second function selection) • SP121.b7: MRS (Output stop) • SP121.b8: JOG (Jog operation selection) • SP121.b9: CS (Selection of automatic restart after instantaneous power failure, flying start) • SP121.b10: STOP (Start self-holding selection) • SP121.b11: RES (Inverter reset) • SP121.b12 to SP122.b15: Not used To send more than one command simultaneously, convert the binary value of the device (with applicable bits on) to a decimal value, and write the decimal value to SP121. Example) Sending forward rotation command, RL (Low-speed operation command), and JOG (Jog operation selection) simultaneously Binary: 0000000100001010 Decimal: 266 Write 266 to SP121.

[FREQROL 800]

GT 27 GT 25 GT 23 GT 21 GS 25 GS 21

Item	Reference
Specifications of bit devices	☞ Page 1717 Monitoring-supported bit devices ([FREQROL 800])
	☞ Page 1718 Availability of writing/reading data to/from bit devices ([FREQROL 800])
Specifications of word devices	☞ Page 1718 Monitoring-supported word devices ([FREQROL 800])
	☞ Page 1719 Availability of writing/reading data to/from word devices ([FREQROL 800])
Specifications of virtual inverter devices	☞ Page 1719 Virtual inverter devices ([FREQROL 800])

When [Automatic Negotiation] is set to [Yes] in the GOT communication settings, the inverter parameters are reconfigured within the user-specified negotiation time.

If the automatic connection fails, set the longer negotiation time with GT Designer3 or the utility.

Monitoring-supported bit devices ([FREQROL 800])

The following table shows monitoring-supported virtual bit devices for inverters.

To check whether writing/reading data to/from each device is available, refer to the following.

☞ Page 1718 Availability of writing/reading data to/from bit devices ([FREQROL 800])

For details on virtual inverter devices, refer to the following.

☞ Page 1719 Virtual inverter devices ([FREQROL 800])

○: Available

×: Not available

Device name		Device No. representation	Setting range	Specifications of EG devices*1	
				Assignment to EG devices	Access using a client
RS	Inverter status monitor	Decimal	0 to 15	×	×
WS	Operation command	Decimal	0 to 15	×	×
X	Input	Hexadecimal	00 to 7F	○	○
Y	Output	Hexadecimal	00 to 7F	○	○
M	Internal relay	Decimal	0 to 127	○	○
TC	Timer coil	Decimal	0 to 15	○	○ (Not usable as word data)
TT	Timer contact	Decimal	0 to 15	○	○ (Not usable as word data)
CC	Counter coil	Decimal	0 to 15	○	○ (Not usable as word data)
CT	Counter contact	Decimal	0 to 15	○	○ (Not usable as word data)
SC	Retentive timer coil	Decimal	0 to 15	○	○ (Not usable as word data)
SS	Retentive timer contact	Decimal	0 to 15	○	○ (Not usable as word data)
SM*2	Special relay	Decimal	0 to 2047	○	○

*1 For the devices assigned to EG devices (gateway devices) and the compatible clients, refer to the following.
📖GT Designer3 (GOT2000) Screen Design Manual

*2 Functions are assigned to the SM devices by using the PLC function.
Do not write data from the GOT.

A

Availability of writing/reading data to/from bit devices ([FREQROL 800])

The following shows whether writing/reading data to/from bit devices is available by device type.

When the device type is other than the bit type, set the device No. in multiples of 16.

R/W: Both read and write

R/-: Read only

-/W: Write only

-/-: No read/write access

Device name	Device type				
	Bit	Byte (8 bits)	Word (16 bits)	Double-word (32 bits)	Quad-word (64 bits)
RS	R/-	-/-	-/-	-/-	-/-
WS	-/W	-/-	-/-	-/-	-/-
X	R/W	-/-	R/W	R/W	-/-
Y	R/W	-/-	R/W	R/W	-/-
M	R/W	-/-	R/W	R/W	-/-
TC	R/W	-/-	-/-	-/-	-/-
TT	R/W	-/-	-/-	-/-	-/-
CC	R/W	-/-	-/-	-/-	-/-
CT	R/W	-/-	-/-	-/-	-/-
SC	R/W	-/-	-/-	-/-	-/-
SS	R/W	-/-	-/-	-/-	-/-
SM	R/W	-/-	R/W	R/W	-/-

Monitoring-supported word devices ([FREQROL 800])

The following table shows monitoring-supported virtual word devices for inverters.

To check whether writing/reading data to/from each device is available, refer to the following.

☞ Page 1719 Availability of writing/reading data to/from word devices ([FREQROL 800])

For details on virtual inverter devices, refer to the following.

☞ Page 1719 Virtual inverter devices ([FREQROL 800])

○: Available

×: Not available

Device name		Device No. representation	Setting range	Specifications of EG devices*1	
				Assignment to EG devices	Access using a client
A	Alarm definition	Decimal	0 to 7	○	○
Pr	Parameter	Decimal	0 to 1500	○	○
SP	Special parameter	Decimal	108 to 127	○	○
TN	Timer current value	Decimal	0 to 15	○	○
CN	Counter current value	Decimal	0 to 15	○	○
SN	Retentive timer current value	Decimal	0 to 15	○	○
D	Data register	Decimal	0 to 255	○	○
SD	Special register	Decimal	0 to 2047	○	○

*1 For the devices assigned to EG devices (gateway devices) and the compatible clients, refer to the following.
📖GT Designer3 (GOT2000) Screen Design Manual

Availability of writing/reading data to/from word devices ([FREQROL 800])

The following shows the availability of writing/reading data to/from word devices by device type.

R/W: Both read and write

R/-: Read only

-/W: Write only

-/-: No read/write access

Device name	Device type			
	Word (16 bits)	Double-word (32 bits)	Quad-word (64 bits)	Bit of word data
A	R/-	-/-	-/-	-/-
Pr	R/W	-/-	-/-	-/-
SP*1	R/W	-/-	-/-	-/-
TN	R/W	R/W	-/-	-/-
CN	R/W	R/W	-/-	-/-
SN	R/W	R/W	-/-	-/-
D	R/W	R/W	-/-	R/W
SD	R/W	R/W	-/-	R/W

*1 Only reading is available for SP111 to SP114 and SP117 to SP119.
Only writing is available for SP124 and SP125.

Virtual inverter devices ([FREQROL 800])

The following shows the correspondence between the virtual devices used in the GOT and the inverter data.

For details on the inverter parameters, refer to the following.

📖Manual of the inverter used

Virtual device name	Reference
RS	☞ Page 1719 Inverter status monitor ([FREQROL 800])
WS	☞ Page 1720 Operation command ([FREQROL 800])
	☞ Page 1721 Activating WS devices ([FREQROL 800])
A	☞ Page 1722 Alarm definition ([FREQROL 800])
Pr	☞ Page 1722 Parameter ([FREQROL 800])
SP	☞ Page 1723 Special parameter ([FREQROL 800])
	☞ Page 1724 Specifications of SP122 and SP121 ([FREQROL 800])

■Inverter status monitor ([FREQROL 800])

Parameter settings may have been changed in the inverter.

To use the devices, check the parameters and set the parameters as required.

📖Manual of the inverter used

Virtual device name	Name
RS0	RUN (Inverter running)
RS1	During forward rotation
RS2	During reverse rotation
RS3	SU (Up to frequency)
RS4	OL (Overload warning)
RS5	IPF (Instantaneous power failure/undervoltage)
RS6	FU (Output frequency detection)
RS7	ABC1 (Fault)
RS8	ABC2
RS9	Safety monitor output
RS15	Fault occurrence

■Operation command ([FREQROL 800])

Parameter settings may have been changed in the inverter.

To use the devices, check the parameters and set the parameters as required.

📖Manual of the inverter used

Virtual device name	Name
WS0*1*2	AU (Terminal 4 input selection)
WS1	Forward rotation command
WS2	Reverse rotation command
WS3*1*2	RL (Low-speed operation command)
WS4*1*2	RM (Middle-speed operation command)
WS5*1*2	RH (High-speed operation command)
WS6*1*2	RT (Second function selection)
WS7*1*2	MRS (Output stop)
WS8*1*2*3	JOG (Jog operation selection)
WS9*1*2*3	CS (Selection of automatic restart after instantaneous power failure, flying start)
WS10*1*2*3	STOP (Start self-holding selection)
WS11*1*2*3	RES (Inverter reset)

*1 When the GOT is connected to the PU connector and the operation mode is set to the PU operation mode, the device cannot be used.

*2 The monitor data can be changed by the settings of Pr.180 to Pr.189 (input terminal function selection).
For the relationship between the parameters and terminals, refer to the following.
📖Manual of the inverter used

*3 The device is invalid for the initial state of the inverter in which a function that cannot be controlled by the GOT is set or no function is set.
Change the relevant setting in Pr.180 to Pr.189 (input terminal function selection).

When using the operation command, note the following.

Precautions	Description
When setting a device for a bit switch	Do not select [Alternate] for [Switch Action] of the bit switch.
When activating WS devices	☞ Page 1721 Activating WS devices ([FREQROL 800])

■Activating WS devices ([FREQROL 800])

More than one WS device cannot turn on at once.

Turning on one WS device turns off the other WS devices.

Use SP122 or SP121 to turn on multiple WS devices simultaneously.

☞ Page 1724 Specifications of SP122 and SP121 ([FREQROL 800])

The following shows the specifications of WS devices.

WS device	Specifications
WS0 to WS7	GOT's virtual devices corresponding to the inverter's operation commands (instruction code: HFA, bit length: 8 bits). 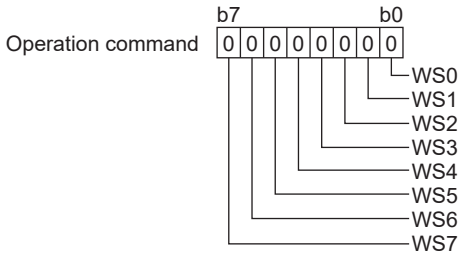 The function of each bit differs depending on the inverter. Example) A800 series inverter • WS0: AU (Terminal 4 input selection) • WS1: Forward rotation command • WS2: Reverse rotation command • WS3: RL (Low-speed operation command) • WS4: RM (Middle-speed operation command) • WS5: RH (High-speed operation command) • WS6: RT (Second function selection) • WS7: MRS (Output stop) When you turn on one of the WS0 to WS7 devices, the rest of these devices are turned off. Example) When you turn on WS1 WS0 and WS2 to WS7 are turned off.
WS8 to WS15	WS8 to WS11 are GOT's virtual devices corresponding to the inverter's operation commands (extended) (instruction code: HF9, bit length: 16 bits). 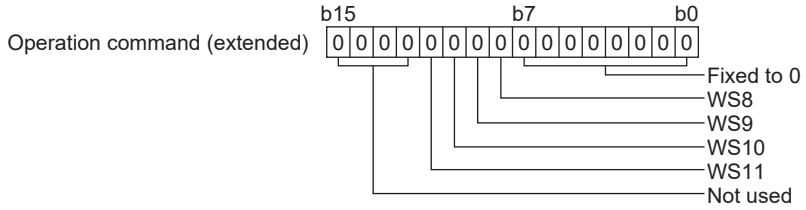 The function of each bit differs depending on the inverter. Example) A800 series inverter • WS8: JOG (Jog operation selection) • WS9: CS (Selection of automatic restart after instantaneous power failure, flying start) • WS10: STOP (Start self-holding selection) • WS11: RES (Inverter reset) Turning on a device out of WS8 to WS11 turns off WS0 to WS15 except the one that is turned on. Example) When you turn on WS9 WS0 to WS8 and WS10 to WS15 are turned off.

A

■Alarm definition ([FREQROL 800])

Virtual device name	Name
A0	Second fault in past
A1	Latest fault
A2	Fourth fault in past
A3	Third fault in past
A4	Sixth fault in past
A5	Fifth fault in past
A6	Eighth fault in past
A7	Seventh fault in past

■Parameter ([FREQROL 800])

The virtual device numbers (Pr) used in the GOT correspond to the inverter parameter numbers.

For the inverter parameters, refer to the following.

📖Manual of the inverter used

When using a parameter, note the following.

Precautions	Description
When setting 8888 or 9999 to a parameter (Pr) of an inverter	Values 8888 and 9999 are used for particular purposes. To set these values to inverter parameters, write the following values to the GOT virtual device. • To set 8888: 65520 • To set 9999: 65535
When specifying Pr900 to Pr933 (Calibration parameter) or Pr934 and Pr935 (PID display)	If you specify Pr900 to Pr933 (Calibration parameter), or Pr934 and Pr935 (PID display), whether the value below must be written to SP108 (Second parameter changing) depends on the specified device number and inverter model. • H00: Offset/gain • H01: Analog • H02: Analog value at terminal

■Special parameter ([FREQROL 800])

If the GOT reads or writes data from or to a virtual device (SP), the inverter's instruction code corresponding to the SP device is used for communication.

For instruction details, and values to be read and written, refer to the following.

📖Manual of the inverter used

Virtual device name	Name	Instruction code	
		Read	Writing
SP108	Second parameter changing	6CH	ECH
SP109	Set frequency (RAM)	6DH	EDH
SP110	Set frequency (RAM, EEPROM)	6EH	EEH
SP111	Output frequency/speed	6FH	-
SP112	Output current	70H	-
SP113	Output voltage	71H	-
SP114	Special monitor	72H	-
SP115	Special monitor selection No.	73H	F3H
SP116	Faults history batch clear	-	F4H
	Latest fault, Second fault in past	74H	-
SP117	Third fault in past, Fourth fault in past	75H	-
SP118	Fifth fault in past, Sixth fault in past	76H	-
SP119	Seventh fault in past, Eighth fault in past	77H	-
SP121*1*2	Inverter status monitor (extended)	79H	F9H
	Operation command (extended)		
SP122*1*2	Inverter status monitor	7AH	-
	Operation command	-	FAH
SP123	Operation mode	7BH	FBH
SP124	All parameter clear	-	FCH
SP125	Inverter reset	-	FDH
SP127	Link parameter extended setting	7FH	FFH

*1 When the GOT is connected to the PU connector and the operation mode is set to the PU operation mode, the multispeed operation (WS3 to WS7, SP121, SP122) cannot be used.
For using the multi-speed operation, follow either of the operations below.
Connect the GOT to the RS-485 terminal and set the operation mode to the NET operation mode (Computer link operation mode), and then operate the inverter.
Change the motor speed with the set frequency (SP109, SP110), and then operate the inverter with the forward or reverse rotation (WS1, WS2, SP121, SP122).

*2 For the specifications of SP122 and SP121, refer to the following.
☞ Page 1724 Specifications of SP122 and SP121 ([FREQROL 800])

A

■Specifications of SP122 and SP121 ([FREQROL 800])

SP122 and SP121 are the GOT's virtual devices corresponding to the inverter's ordinary and extended operation commands. The following shows the specifications of SP122 and SP121.

SP device	Specifications
SP122	GOT's virtual device corresponding to the inverter's operation command (instruction code: HFA, bit length: 8 bits). The function of each bit differs depending on the inverter. Example) A800 series inverter • SP122.b0: AU (Terminal 4 input selection) • SP122.b1: Forward rotation command • SP122.b2: Reverse rotation command • SP122.b3: RL (Low-speed operation command) • SP122.b4: RM (Middle-speed operation command) • SP122.b5: RH (High-speed operation command) • SP122.b6: RT (Second function selection) • SP122.b7: MRS (Output stop) To send more than one command simultaneously, convert the binary value of the bits to be turned on to a decimal value, and write the decimal value to SP122. Example) Sending forward rotation command and RL (Low-speed operation command) simultaneously Binary: 00001010 Decimal: 10 Write 10 to SP122.
SP121	GOT's virtual devices corresponding to the inverter's operation commands (extended) (instruction code: HF9, bit length: 16 bits). The function of each bit differs depending on the inverter. Example) A800 series inverter • SP121.b0: AU (Terminal 4 input selection) • SP121.b1: Forward rotation command • SP121.b2: Reverse rotation command • SP121.b3: RL (Low-speed operation command) • SP121.b4: RM (Middle-speed operation command) • SP121.b5: RH (High-speed operation command) • SP121.b6: RT (Second function selection) • SP121.b7: MRS (Output stop) • SP121.b8: JOG (Jog operation selection) • SP121.b9: CS (Selection of automatic restart after instantaneous power failure, flying start) • SP121.b10: STOP (Start self-holding selection) • SP121.b11: RES (Inverter reset) • SP121.b12 to SP122.b15: Not used To send more than one command simultaneously, convert the binary value of the device (with applicable bits on) to a decimal value, and write the decimal value to SP121. Example) Sending forward rotation command, RL (Low-speed operation command), and JOG (Jog operation selection) simultaneously Binary: 0000000100001010 Decimal: 266 Write 266 to SP121.

[FREQROL 800/E700NE(Batch monitor)]

GT27 GT25 GT23 GT21 GS25 GS21

Item	Reference
Specifications of bit devices	☞ Page 1725 Monitoring-supported bit devices ([FREQROL 800/E700NE(Batch monitor)])
	☞ Page 1726 Availability of writing/reading data to/from bit devices ([FREQROL 800/E700NE(Batch monitor)])
Specifications of word devices	☞ Page 1726 Monitoring-supported word devices ([FREQROL 800/E700NE(Batch monitor)])
	☞ Page 1727 Availability of writing/reading data to/from word devices ([FREQROL 800/E700NE(Batch monitor)])
Specifications of double-word devices	☞ Page 1727 Monitoring-supported double-word devices ([FREQROL 800/E700NE(Batch monitor)])
	☞ Page 1728 Availability of writing/reading data to/from double-word devices ([FREQROL 800/E700NE(Batch monitor)])
Specifications of virtual inverter devices	☞ Page 1728 Virtual inverter devices ([FREQROL 800/E700NE(Batch monitor)])

Monitoring-supported bit devices ([FREQROL 800/E700NE(Batch monitor)])

The following table shows monitoring-supported virtual bit devices for inverters.

To check whether writing/reading data to/from each device is available, refer to the following.

☞ Page 1726 Availability of writing/reading data to/from bit devices ([FREQROL 800/E700NE(Batch monitor)])

For details on virtual inverter devices, refer to the following.

☞ Page 1728 Virtual inverter devices ([FREQROL 800/E700NE(Batch monitor)])

○: Available

×: Not available

Device name		Device No. representation	Setting range	Specifications of EG devices*1	
				Assignment to EG devices	Access using a client
RS	Inverter status monitor	Decimal	0 to 15	×	×
WS	Operation command	Decimal	0 to 15	×	×
IOST	I/O terminal monitor	Decimal	0 to 127	×	×
CMD	Operation command	Decimal	0 to 63	×	×
X*2	Input	Hexadecimal	00 to 7F	○	○
Y*2	Output	Hexadecimal	00 to 7F	○	○
M*2	Internal relay	Decimal	0 to 127	○	○
TC*2	Timer coil	Decimal	0 to 15	○	○ (Not usable as word data)
TT*2	Timer contact	Decimal	0 to 15	○	○ (Not usable as word data)
CC*2	Counter coil	Decimal	0 to 15	○	○ (Not usable as word data)
CT*2	Counter contact	Decimal	0 to 15	○	○ (Not usable as word data)
SC*2	Retentive timer coil	Decimal	0 to 15	○	○ (Not usable as word data)
SS*2	Retentive timer contact	Decimal	0 to 15	○	○ (Not usable as word data)
SM*2*3	Special relay	Decimal	0 to 2047	○	○

*1 For the devices assigned to EG devices (gateway devices) and the compatible clients, refer to the following.
📖GT Designer3 (GOT2000) Screen Design Manual

*2 Not available to FR-E7□0-NE.

*3 Functions are assigned to the SM devices by using the PLC function.
Do not write data from the GOT.

Availability of writing/reading data to/from bit devices ([FREQROL 800/E700NE(Batch monitor)])

The following shows whether writing/reading data to/from bit devices is available by device type.

When the device type is other than the bit type, set the device No. in multiples of 16.

R/W: Both read and write

R/-: Read only

-/W: Write only

-/-: No read/write access

Device name	Device type				
	Bit	Byte (8 bits)	Word (16 bits)	Double-word (32 bits)	Quad-word (64 bits)
RS	R/-	-/-	-/-	-/-	-/-
WS	-/W	-/-	-/-	-/-	-/-
IOST	R/-	-/-	-/-	-/-	-/-
CMD	-/W	-/-	-/-	-/-	-/-
X	R/W	-/-	R/W	R/W	-/-
Y	R/W	-/-	R/W	R/W	-/-
M	R/W	-/-	R/W	R/W	-/-
TC	R/W	-/-	-/-	-/-	-/-
TT	R/W	-/-	-/-	-/-	-/-
CC	R/W	-/-	-/-	-/-	-/-
CT	R/W	-/-	-/-	-/-	-/-
SC	R/W	-/-	-/-	-/-	-/-
SS	R/W	-/-	-/-	-/-	-/-
SM	R/W	-/-	R/W	R/W	-/-

Monitoring-supported word devices ([FREQROL 800/E700NE(Batch monitor)])

The following table shows monitoring-supported virtual word devices for inverters.

To check whether writing/reading data to/from each device is available, refer to the following.

☞ Page 1727 Availability of writing/reading data to/from word devices ([FREQROL 800/E700NE(Batch monitor)])

For details on virtual inverter devices, refer to the following.

☞ Page 1728 Virtual inverter devices ([FREQROL 800/E700NE(Batch monitor)])

○: Available

×: Not available

Device name		Device No. representation	Setting range	Specifications of EG devices*1	
				Assignment to EG devices	Access using a client
A	Alarm definition	Decimal	0 to 7	○	○
Pr	Parameter	Decimal	0 to 1500	○	○
SP	Special parameter	Decimal	108 to 127	○	○
TN*2	Timer current value	Decimal	0 to 15	○	○
CN*2	Counter current value	Decimal	0 to 15	○	○
SN*2	Retentive timer current value	Decimal	0 to 15	○	○
D*2	Data register	Decimal	0 to 255	○	○
SD*2	Special register	Decimal	0 to 2047	○	○

*1 For the devices assigned to EG devices (gateway devices) and the compatible clients, refer to the following.
📖GT Designer3 (GOT2000) Screen Design Manual

*2 Not available to FR-E7□0-NE.

Availability of writing/reading data to/from word devices ([FREQROL 800/E700NE(Batch monitor)])

The following shows the availability of writing/reading data to/from word devices by device type.

R/W: Both read and write

R/-: Read only

-/W: Write only

-/-: No read/write access

Device name	Device type			
	Word (16 bits)	Double-word (32 bits)	Quad-word (64 bits)	Bit of word data
A	R/-	-/-	-/-	-/-
Pr	R/W	-/-	-/-	-/-
SP*1	R/W	-/-	-/-	-/-
TN	R/W	R/W	-/-	-/-
CN	R/W	R/W	-/-	-/-
SN	R/W	R/W	-/-	-/-
D	R/W	R/W	-/-	R/W
SD	R/W	R/W	-/-	R/W

*1 Only reading is available for SP111 to SP114 and SP117 to SP119.
Only writing is available for SP124 and SP125.

Monitoring-supported double-word devices ([FREQROL 800/E700NE(Batch monitor)])

The following table shows monitoring-supported virtual double-word devices for inverters.

To check whether writing/reading data to/from each device is available, refer to the following.

☞ Page 1728 Availability of writing/reading data to/from double-word devices ([FREQROL 800/E700NE(Batch monitor)])

For details on virtual inverter devices, refer to the following.

☞ Page 1728 Virtual inverter devices ([FREQROL 800/E700NE(Batch monitor)])

○: Available

×: Not available

Device name		Device No. representation	Setting range	Specifications of EG devices*1	
				Assignment to EG devices	Access using a client
AL	Faults history	Decimal	0 to 899	×	×
LPr*2	Parameter (32-bit)	Decimal	0 to 1500	×	×
OP	Operation parameters	Decimal	0 to 5	×	×
PV	Current value monitor	Decimal	1 to 143	×	×

*1 For the devices assigned to EG devices (gateway devices) and the compatible clients, refer to the following.
📖GT Designer3 (GOT2000) Screen Design Manual

*2 If you specify LPr900 to LPr935, the following item is displayed in the device setting dialog.
[Setting items (for calibration parameters)]: [Bias/gain value], [Analog input value]
Enclose the device number in parentheses when selecting [Analog input value].
Example 1) Notation when [Bias/gain value] is selected: LPr900
Example 2) Notation when [Analog input value] is selected: LPr(900)
When LPr900 or LPr901 (Calibration parameter) is specified, selecting [Bias/gain value] or [Analog input value] does not affect the monitoring target.

Availability of writing/reading data to/from double-word devices ([FREQROL 800/E700NE(Batch monitor)])

The following shows the availability of writing/reading data to/from double-word devices by device type.

R/W: Both read and write

R/-: Read only

-/W: Write only

-/-: No read/write access

Device name	Device type			
	Word (16 bits)	Double-word (32 bits)	Quad-word (64 bits)	Bit of double-word data
AL	-/-	R/-	-/-	-/-
LPr	-/-	R/W	-/-	-/-
OP*1	-/-	R/W	-/-	-/-
PV	-/-	R/-	-/-	-/-

*1 Only reading is available for OP3.
Only writing is available for OP4 and OP5.

Virtual inverter devices ([FREQROL 800/E700NE(Batch monitor)])

The following shows the correspondence between the virtual devices used in the GOT and the inverter data.

For details on the inverter parameters, refer to the following.

📖Manual of the inverter used

Virtual device name	Reference
RS*1	☞ Page 1729 Inverter status monitor ([FREQROL 800/E700NE(Batch monitor)])
WS*1	☞ Page 1730 Operation command ([FREQROL 800/E700NE(Batch monitor)])
	☞ Page 1731 Operation when turning on/off the WS devices ([FREQROL 800/E700NE(Batch monitor)])
IOST	☞ Page 1732 I/O terminal monitor ([FREQROL 800/E700NE(Batch monitor)])
CMD	☞ Page 1734 Operation command ([FREQROL 800/E700NE(Batch monitor)])
	☞ Page 1735 Operation when turning on/off one of the CMD3 to CMD12 devices ([FREQROL 800/E700NE(Batch monitor)])
	☞ Page 1735 Operation when turning on/off one of the CMD48 to CMD52 devices ([FREQROL 800/E700NE(Batch monitor)])
A*1	☞ Page 1736 Alarm definition ([FREQROL 800/E700NE(Batch monitor)])
Pr*1	☞ Page 1736 Parameter, parameter (32-bit) ([FREQROL 800/E700NE(Batch monitor)])
SP*1	☞ Page 1737 Special parameter ([FREQROL 800/E700NE(Batch monitor)])
	☞ Page 1738 Specifications of SP122 and SP121 ([FREQROL 800/E700NE(Batch monitor)])
AL	☞ Page 1739 Faults history ([FREQROL 800/E700NE(Batch monitor)])
LPr	☞ Page 1736 Parameter, parameter (32-bit) ([FREQROL 800/E700NE(Batch monitor)])
OP	☞ Page 1741 Operation parameter ([FREQROL 800/E700NE(Batch monitor)])
PV	☞ Page 1742 Current value monitor ([FREQROL 800/E700NE(Batch monitor)])

*1 The virtual device is also usable for the controller whose type is [FREQROL 500/700/800, SENSORLESS SERVO] or [FREQROL 800]. Use the device to maintain compatibility when you change the controller type in a project from any of the above ones to [FREQROL 800(Batch monitor)].
When you create a project, use a different device.

The lists of virtual devices shown in this section explain the FR-A800 Plus series and FR-E800 series models using the following abbreviations.

Series	Abbreviation	Model
FR-A800 Plus series	CRN	FR-A8□0-CRN FR-A8□2-CRN FR-A8□0-E-CRN FR-A8□2-E-CRN
	R2R	FR-A8□0-R2R FR-A8□2-R2R FR-A8□0-E-R2R FR-A8□2-E-R2R
	AWH	FR-A8□0-AWH FR-A8□0-E-AWH
	LC	FR-A8□0-LC FR-A8□0-E-LC
FR-E800 series	E800	FR-E8□0
	E	FR-E8□0-E

■Inverter status monitor ([FREQROL 800/E700NE(Batch monitor)])

Parameter settings may have been changed in the inverter.

To use the devices, check the parameters and set the parameters as required.

📖Manual of the inverter used

○: Available

×: Not available

Virtual device name	Name	FR-A800 series FR-A800 Plus series FR-F800 series	FR-E800 series	FR-E700 series FR-E7□0-NE
RS0	RUN (Inverter running)	○*1	○*1	○*1
RS1	During forward rotation	○	○	○
RS2	During reverse rotation	○	○	○
RS3	SU (Up to frequency)	○*1	○	○
RS4	OL (Overload warning)	○*1	○	○
RS5	IPF (Instantaneous power failure/ undervoltage)	○*1	×	×
RS6	FU (Output frequency detection)	○*1	○*1	○*1
RS7	ABC1 (Fault)	○*1	○*1	○*1
RS8	ABC2	○*1	×	×
RS9	Safety monitor output	○	○	×
RS15	Fault occurrence	○	○	○

*1 The description can be changed by the settings of Pr.190 to Pr.196 (input terminal function selection).
For the relationship between the parameters and terminals, refer to the following.
📖Manual of the inverter used

■Operation command ([FREQROL 800/E700NE(Batch monitor)])

Parameter settings may have been changed in the inverter.

To use the devices, check the parameters and set the parameters as required.

📖Manual of the inverter used

○: Available

×: Not available

Virtual device name	Name	FR-A800 series FR-A800 Plus series FR-F800 series	FR-E800 series	FR-E700 series FR-E7□0-NE
WS0*1	AU (Terminal 4 input selection)	○*2	○	○
WS1	Forward rotation command	○	○	○
WS2	Reverse rotation command	○	○	○
WS3*1	RL (Low-speed operation command)	○*2	○*2	○*2
WS4*1	RM (Middle-speed operation command)	○*2	○*2	○*2
WS5*1	RH (High-speed operation command)	○*2	○*2	○*2
WS6*1	RT (Second function selection)	○*2	○	○
WS7*1	MRS (Output stop)	○*2	○*2	○*2
WS8*1	JOG (Jog operation selection)	○ *2*3	○	×
WS9*1	CS (Selection of automatic restart after instantaneous power failure, flying start)	○ *2*3	×	×
WS10*1	STOP (Start self-holding selection)	○ *2*3	×	×
WS11*1	RES (Inverter reset)	○ *2*3	○ *2*3	○*2

*1 When the GOT is connected to the PU connector and the operation mode is set to the PU operation mode, the device cannot be used.

*2 The monitor data can be changed by the settings of Pr.180 to Pr.189 (input terminal function selection).
For the relationship between the parameters and terminals, refer to the following.
📖Manual of the inverter used

*3 The device is invalid for the initial state of the inverter in which a function that cannot be controlled by the GOT is set or no function is set.
Change the relevant setting in Pr.180 to Pr.189 (input terminal function selection).

When using the operation command, note the following.

Precautions	Description
When setting a device for a bit switch	Do not select [Alternate] for [Switch Action] of the bit switch.
When activating WS devices	☞ Page 1731 Operation when turning on/off the WS devices ([FREQROL 800/E700NE(Batch monitor)])

■Operation when turning on/off the WS devices ([FREQROL 800/E700NE(Batch monitor)])

When you turn on/off one of the WS0 to WS15 devices, the rest of these devices are turned off.

Example) When you turn on WS9

WS0 to WS8 and WS10 to WS15 are turned off.

The following shows the relationship between the inverter's operation commands and WS devices.

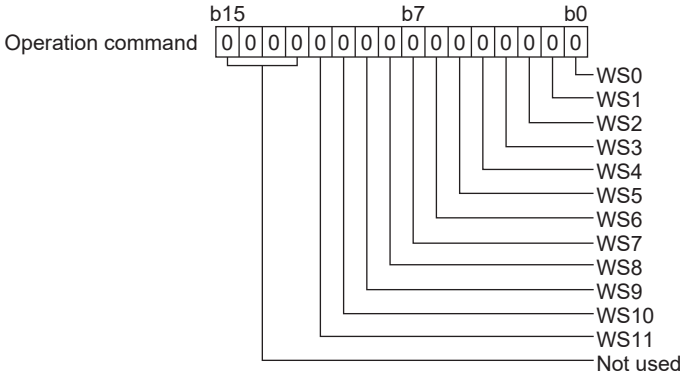

The function of each bit differs depending on the inverter.

Example) A800 series inverter

- WS0: AU (Terminal 4 input selection)
- WS1: Forward rotation command
- WS2: Reverse rotation command
- WS3: RL (Low-speed operation command)
- WS4: RM (Middle-speed operation command)
- WS5: RH (High-speed operation command)
- WS6: RT (Second function selection)
- WS7: MRS (Output stop)
- WS8: JOG (Jog operation selection)
- WS9: CS (Selection of automatic restart after instantaneous power failure, flying start)
- WS10: STOP (Start self-holding selection)
- WS11: RES (Inverter reset)

Use SP122 or SP121 to control multiple WS devices simultaneously.

☞ Page 1738 Specifications of SP122 and SP121 ([FREQROL 800/E700NE(Batch monitor)])

A

■I/O terminal monitor ([FREQROL 800/E700NE(Batch monitor)])

○: Available

×: Not available

Virtual device name	Name	FR-A800 series FR-A800 Plus series FR-F800 series	FR-E800 series		FR-E700 series
			E800	E	FR-E7□0-NE
IOST1	Input terminal STF/DI0	○*1	○*1	○*1	○*1
IOST2	Input terminal STR/DI1	○*1	○*1	○*1	○*1
IOST3	Input terminal RL	○*1	○*1	×	○*1
IOST4	Input terminal RM	○*1	○*1	×	○*1
IOST5	Input terminal RH	○*1	○*1	×	○*1
IOST6	Input terminal RT	○*1	×	×	×
IOST7	Input terminal AU	○*1	×	×	×
IOST8	Input terminal JOG	○*1	×	×	×
IOST9	Input terminal CS	○*1	×	×	×
IOST10	Input terminal MRS	○*1	○*1	×	○*1
IOST11	Input terminal STOP	○*1	×	×	×
IOST12	Input terminal RES	○*1	○*1	×	○*1
IOST32	Output terminal RUN	○*1	○*1	×	○*1
IOST33	Output terminal SU	○*1	×	×	×
IOST34	Output terminal IPF	○*1	×	×	×
IOST35	Output terminal OL	○*1	×	×	×
IOST36	Output terminal FU	○*1	○*1	×	○*1
IOST37	Output terminal ABC1	○*1	○*1	○*1	○*1
IOST38	Output terminal ABC2	○*1	×	×	×
IOST39	Output terminal SO	○	×	×	×
IOST48	NET Y1 output	×	○ *1*2	○ *1*2	×
IOST49	NET Y2 output	×	○ *1*2	○ *1*2	×
IOST50	NET Y3 output	×	○ *1*2	○ *1*2	×
IOST51	NET Y4 output	×	○ *1*2	○ *1*2	×
IOST64	Option input terminal X0	○	○	○	×
IOST65	Option input terminal X1	○	○	○	×
IOST66	Option input terminal X2	○	○	○	×
IOST67	Option input terminal X3	○	○	○	×
IOST68	Option input terminal X4	○	○	○	×
IOST69	Option input terminal X5	○	○	○	×
IOST70	Option input terminal X6	○	○	○	×
IOST71	Option input terminal X7	○	○	○	×
IOST72	Option input terminal X8	○	○	○	×
IOST73	Option input terminal X9	○	○	○	×
IOST74	Option input terminal X10	○	○	○	×
IOST75	Option input terminal X11	○	○	○	×
IOST76	Option input terminal X12	○	○	○	×
IOST77	Option input terminal X13	○	○	○	×
IOST78	Option input terminal X14	○	○	○	×
IOST79	Option input terminal X15	○	○	○	×
IOST80	Option input terminal DY	○	○	○	×
IOST96	Option output terminal Y0/DO0	○*1	○*1	○*1	×
IOST97	Option output terminal Y1/DO1	○*1	○*1	○*1	×
IOST98	Option output terminal Y2/DO2	○*1	○*1	○*1	×
IOST99	Option output terminal Y3/DO3	○*1	○*1	○*1	×
IOST100	Option output terminal Y4/DO4	○*1	○*1	○*1	×
IOST101	Option output terminal Y5/DO5	○*1	○*1	○*1	×
IOST102	Option output terminal Y6/DO6	○*1	○*1	○*1	×

Virtual device name	Name	FR-A800 series FR-A800 Plus series FR-F800 series	FR-E800 series		FR-E700 series
			E800	E	FR-E7□0-NE
IOST103	Option output terminal RA1	○*1	○*1	○*1	×
IOST104	Option output terminal RA2	○*1	○*1	○*1	×
IOST105	Option output terminal RA3	○*1	○*1	○*1	×

*1 The monitor data can be changed by the settings of Pr.180 to Pr.189 (input terminal function selection) or Pr.190 to Pr.196 or Pr.313 to Pr.322 (output terminal function selection).
For the relationship between the parameters and terminals, refer to the following.
📖Manual of the inverter used

*2 Use an inverter having SERIAL (serial No.) "□□211******" or later.
SERIAL (serial No.) is provided on the rating plate of the inverter.

A

■Operation command ([FREQROL 800/E700NE(Batch monitor)])

○: Available

×: Not available

Virtual device name	Name	FR-A800 series FR-A800 Plus series FR-F800 series	FR-E800 series	FR-E700 series FR-E7□0-NE
CMD0	Stop command	○	○	○
CMD1	Forward rotation command	○	○	○
CMD2	Reverse rotation command	○	○	○
CMD3*1	RL terminal	○*2	○*2	○*2
CMD4*1	RM terminal	○*2	○*2	○*2
CMD5*1	RH terminal	○*2	○*2	○*2
CMD6*1	RT terminal	○*2	○	○
CMD7*1	AU terminal	○*2	○	○
CMD8*1	JOG terminal	○ *2*3	○	×
CMD9*1	CS terminal	○ *2*3	×	×
CMD10*1	MRS terminal	○*2	○*2	○*2
CMD11*1	STOP terminal	○ *2*3	×	×
CMD12*1	RES terminal	○ *2*3	○ *2*3	○*2
CMD16	Alarm history clear	○	○	○
CMD24	Inverter reset	○	○	○
CMD32	Parameter clear	○	○	○
CMD33	Parameter clear (communication parameters are not cleared)	○	○	○
CMD34	All parameter clear	○	○	○
CMD35	All parameter clear (communication parameters are not cleared)	○	○	○
CMD48	NET X1 input	×	○*2*3*4	×
CMD49	NET X2 input	×	○*2*3*4	×
CMD50	NET X3 input	×	○*2*3*4	×
CMD51	NET X4 input	×	○*2*3*4	×
CMD52	NET X5 input	×	○*2*3*4	×

*1 When the GOT is connected to the PU connector and the operation mode is set to the PU operation mode, the device cannot be used.

*2 The monitor data can be changed by the settings of Pr.180 to Pr.189 (input terminal function selection).
For the relationship between the parameters and terminals, refer to the following.
📖Manual of the inverter used

*3 The device is invalid for the initial state of the inverter in which a function that cannot be controlled by the GOT is set or no function is set.
Change the relevant setting in Pr.180 to Pr.189 (input terminal function selection).

*4 Use an inverter having SERIAL (serial No.) "□□211******" or later.
SERIAL (serial No.) is provided on the rating plate of the inverter.

When using the operation command, note the following.

Precautions	Description
When setting a device for a bit switch	Do not select [Alternate] for [Switch Action] of the bit switch.
Operation when a CMD device is turned on	☞ Page 1735 Operation when turning on/off one of the CMD3 to CMD12 devices ([FREQROL 800/E700NE(Batch monitor)]) ☞ Page 1735 Operation when turning on/off one of the CMD48 to CMD52 devices ([FREQROL 800/E700NE(Batch monitor)])

■Operation when turning on/off one of the CMD3 to CMD12 devices ([FREQROL 800/E700NE(Batch monitor)])

The CMD3 to CMD12 devices cannot be controlled simultaneously.

When you turn on/off one of the CMD3 to CMD12 devices, the rest of these devices are turned off.

Use OP4 to control multiple devices from CMD3 to CMD12 simultaneously.

The following shows the relationship between CMD3 to CMD12 and OP4.

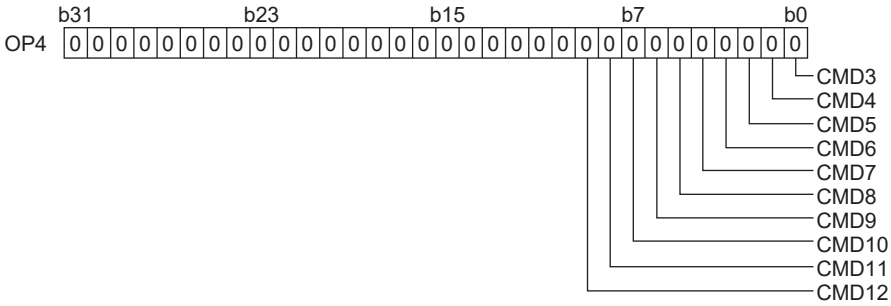

Example) Turning on the CMD3 (RL terminal) and CMD12 (RES terminal) devices

For a hexadecimal value, write 0201.

For a decimal value, write 513.

■Operation when turning on/off one of the CMD48 to CMD52 devices ([FREQROL 800/E700NE(Batch monitor)])

The CMD48 to CMD52 devices cannot be controlled simultaneously.

When you turn on/off one of the CMD48 to CMD52 devices, the rest of these devices are turned off.

Use OP5 to control multiple devices from CMD48 to CMD52 simultaneously.

The following shows the relationship between CMD48 to CMD52 and OP5.

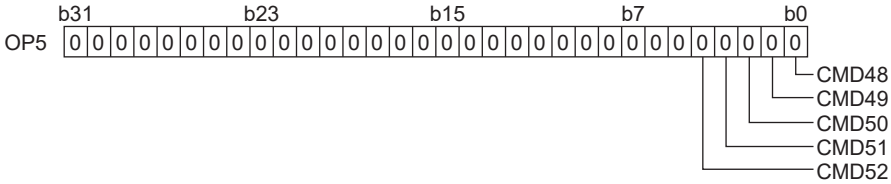

Example) Turning on the CMD48 (NET X1 input) and CMD52 (NET X5 input) devices

For a hexadecimal value, write 0011.

For a decimal value, write 17.

A

■Alarm definition ([FREQROL 800/E700NE(Batch monitor)])

○: Available

×: Not available

Virtual device name	Name	FR-A800 series FR-A800 Plus series FR-F800 series	FR-E800 series	FR-E700 series FR-E7□0-NE
A0	Second alarm in past	○	○	○
A1	Latest fault	○	○	○
A2	Fourth fault in past	○	○	○
A3	Third fault in past	○	○	○
A4	Sixth fault in past	○	○	○
A5	Fifth fault in past	○	○	○
A6	Eighth fault in past	○	○	○
A7	Seventh fault in past	○	○	○

■Parameter, parameter (32-bit) ([FREQROL 800/E700NE(Batch monitor)])

The virtual device numbers (Pr and LPr) used in the GOT correspond to the inverter parameter numbers.

For the inverter parameters, refer to the following.

📖Manual of the inverter used

When using a parameter, note the following.

Precautions	Description
When setting 8888 or 9999 to a parameter (Pr) of an inverter	Values 8888 and 9999 are used for particular purposes. To set these values to inverter parameters using the virtual devices, write the following values from the GOT. • To set 8888: 65520 • To set 9999: 65535
When setting 8888 or 9999 to a 32-bit parameter (LPr) of an inverter	Values 8888 and 9999 are used for particular purposes. To set these values to inverter parameters, write the following values to the GOT virtual device. • To set 8888: 8888 • To set 9999: 9999 You are recommended to set the data type to [Real] for a parameter that can accept a value with a fractional part.
When specifying a calibration parameter or PID display	If you specify Pr900 to Pr933 (Calibration parameter), or Pr934 and Pr935 (PID display), whether the value below must be written to SP108 (Second parameter changing) depends on the specified device number and inverter model. • H00: Offset/gain • H01: Analog • H02: Analog value at terminal

■Special parameter ([FREQROL 800/E700NE(Batch monitor)])

○: Available

×: Not available

Virtual device name	Name	FR-A800 series FR-A800 Plus series FR-F800 series	FR-E800 series	FR-E700 series FR-E7□0-NE
SP108	Second parameter changing	○	○	○
SP109	Set frequency (RAM)	○	○	○
SP110	Set frequency (RAM, EEPROM)	○	○	○
SP111	Output frequency/speed	○	○	○
SP112	Output current	○	○	○
SP113	Output voltage	○	○	○
SP114	Special monitor	○	○	○
SP115	Special monitor selection No.	○	○	○
SP116	Latest fault, Second fault in past/Faults history batch clear	○	○	○
SP117	Third fault in past, fourth fault in past	○	○	○
SP118	Fifth fault in past, sixth fault in past	○	○	○
SP119	Seventh fault in past, Eighth fault in past	○	○	○
SP121*1	Inverter status monitor (extended) / Operation command (extended)	○	○	○
SP122*1	Inverter status monitor / Operation command	○	○	○
SP123	Operation mode	○	○	○
SP124	All parameter clear	○	○	○
SP125	Inverter reset	○	○	○
SP127	Link parameter extended setting	○	○	○

*1 When the GOT is connected to the PU connector and the operation mode is set to the PU operation mode, SP121.b1, SP121.b2, SP122.b1, and SP122.b2 can be used.
For the specifications of SP122 and SP121, refer to the following.
☞ Page 1738 Specifications of SP122 and SP121 ([FREQROL 800/E700NE(Batch monitor)])

A

■Specifications of SP122 and SP121 ([FREQROL 800/E700NE(Batch monitor)])

SP122 and SP121 are the GOT's virtual devices corresponding to the inverter's operation commands.

The following shows the specifications of SP122 and SP121.

SP device	Specifications
SP122	The function of each bit differs depending on the inverter. Example) A800 series inverter • SP122.b0: AU (Terminal 4 input selection) • SP122.b1: Forward rotation command • SP122.b2: Reverse rotation command • SP122.b3: RL (Low-speed operation command) • SP122.b4: RM (Middle-speed operation command) • SP122.b5: RH (High-speed operation command) • SP122.b6: RT (Second function selection) • SP122.b7: MRS (Output stop) • SP122.b8 to b15: Fixed to 0 SP122 (virtual device) is used to maintain compatibility when you change the controller type from [FREQROL 500/700/800, SENSORLESS SERVO] or [FREQROL 800] to [FREQROL 800/E700NE(Batch monitor)]. When [FREQROL 800/E700NE(Batch monitor)] is set, writing a value to SP122 clears each bit of SP122.b8 to SP122.b15. To send more than one command simultaneously, convert the binary value of the bits to be turned on to a decimal value, and write the decimal value to SP122. Example) Sending forward rotation command and RL (Low-speed operation command) simultaneously Binary: 0000000000001010 Decimal: 10 Write 10 to SP122.
SP121	The function of each bit differs depending on the inverter. Example) A800 series inverter • SP121.b0: AU (Terminal 4 input selection) • SP121.b1: Forward rotation command • SP121.b2: Reverse rotation command • SP121.b3: RL (Low-speed operation command) • SP121.b4: RM (Middle-speed operation command) • SP121.b5: RH (High-speed operation command) • SP121.b6: RT (Second function selection) • SP121.b7: MRS (Output stop) • SP121.b8: JOG (Jog operation selection) • SP121.b9: CS (Selection of automatic restart after instantaneous power failure, flying start) • SP121.b10: STOP (Start self-holding selection) • SP121.b11: RES (Inverter reset) To send more than one command simultaneously, convert the binary value of the device (with applicable bits on) to a decimal value, and write the decimal value to SP121. Example) Sending forward rotation command, RL (Low-speed operation command), and JOG (Jog operation selection) simultaneously Binary: 0000000100001010 Decimal: 266 Write 266 to SP121.

■Faults history ([FREQROL 800/E700NE(Batch monitor)])

○: Available

×: Not available

Virtual device name	Name	FR-A800 series FR-A800 Plus series FR-F800 series	FR-E800 series	FR-E700 series FR-E7□0-NE
AL0	Current fault	○	○	○
AL1	Current warning 1	×	○	×
AL2	Current warning 2	×	○	×
AL100	Faults history 1 (symbol)	○	○	○
AL101	Faults history 1 (output frequency)	○	○	○
AL102	Faults history 1 (output current)	○	○	○
AL103	Faults history 1 (output voltage)	○	○	○
AL104	Faults history 1 (energization time)	○	○	○
AL105	Faults history 1 (year)	○	○	×
AL106	Faults history 1 (month)	○	○	×
AL107	Faults history 1 (day)	○	○	×
AL108	Faults history 1 (hour)	○	○	×
AL109	Faults history 1 (minute)	○	○	×
AL200	Faults history 2 (symbol)	○	○	○
AL201	Faults history 2 (output frequency)	○	○	○
AL202	Faults history 2 (output current)	○	○	○
AL203	Faults history 2 (output voltage)	○	○	○
AL204	Faults history 2 (energization time)	○	○	○
AL205	Faults history 2 (year)	○	○	×
AL206	Faults history 2 (month)	○	○	×
AL207	Faults history 2 (day)	○	○	×
AL208	Faults history 2 (hour)	○	○	×
AL209	Faults history 2 (minute)	○	○	×
AL300	Faults history 3 (symbol)	○	○	○
AL301	Faults history 3 (output frequency)	○	○	○
AL302	Faults history 3 (output current)	○	○	○
AL303	Faults history 3 (output voltage)	○	○	○
AL304	Faults history 3 (energization time)	○	○	○
AL305	Faults history 3 (year)	○	○	×
AL306	Faults history 3 (month)	○	○	×
AL307	Faults history 3 (day)	○	○	×
AL308	Faults history 3 (hour)	○	○	×
AL309	Faults history 3 (minute)	○	○	×
AL400	Faults history 4 (symbol)	○	○	○
AL401	Faults history 4 (output frequency)	○	○	○
AL402	Faults history 4 (output current)	○	○	○
AL403	Faults history 4 (output voltage)	○	○	○
AL404	Faults history 4 (energization time)	○	○	○
AL405	Faults history 4 (year)	○	○	×
AL406	Faults history 4 (month)	○	○	×
AL407	Faults history 4 (day)	○	○	×
AL408	Faults history 4 (hour)	○	○	×
AL409	Faults history 4 (minute)	○	○	×
AL500	Faults history 5 (symbol)	○	○	○
AL501	Faults history 5 (output frequency)	○	○	○
AL502	Faults history 5 (output current)	○	○	○
AL503	Faults history 5 (output voltage)	○	○	○
AL504	Faults history 5 (energization time)	○	○	○

Virtual device name	Name	FR-A800 series FR-A800 Plus series FR-F800 series	FR-E800 series	FR-E700 series FR-E7□0-NE
AL505	Faults history 5 (year)	○	○	×
AL506	Faults history 5 (month)	○	○	×
AL507	Faults history 5 (day)	○	○	×
AL508	Faults history 5 (hour)	○	○	×
AL509	Faults history 5 (minute)	○	○	×
AL600	Faults history 6 (symbol)	○	○	○
AL601	Faults history 6 (output frequency)	○	○	○
AL602	Faults history 6 (output current)	○	○	○
AL603	Faults history 6 (output voltage)	○	○	○
AL604	Faults history 6 (energization time)	○	○	○
AL605	Faults history 6 (year)	○	○	×
AL606	Faults history 6 (month)	○	○	×
AL607	Faults history 6 (day)	○	○	×
AL608	Faults history 6 (hour)	○	○	×
AL609	Faults history 6 (minute)	○	○	×
AL700	Faults history 7 (symbol)	○	○	○
AL701	Faults history 7 (output frequency)	○	○	○
AL702	Faults history 7 (output current)	○	○	○
AL703	Faults history 7 (output voltage)	○	○	○
AL704	Faults history 7 (energization time)	○	○	○
AL705	Faults history 7 (year)	○	○	×
AL706	Faults history 7 (month)	○	○	×
AL707	Faults history 7 (day)	○	○	×
AL708	Faults history 7 (hour)	○	○	×
AL709	Faults history 7 (minute)	○	○	×
AL800	Faults history 8 (symbol)	○	○	○
AL801	Faults history 8 (output frequency)	○	○	○
AL802	Faults history 8 (output current)	○	○	○
AL803	Faults history 8 (output voltage)	○	○	○
AL804	Faults history 8 (energization time)	○	○	○
AL805	Faults history 8 (year)	○	○	×
AL806	Faults history 8 (month)	○	○	×
AL807	Faults history 8 (day)	○	○	×
AL808	Faults history 8 (hour)	○	○	×
AL809	Faults history 8 (minute)	○	○	×

■Operation parameter ([FREQROL 800/E700NE(Batch monitor)])

○: Available

×: Not available

Virtual device name		Name	FR-A800 series FR-A800 Plus series FR-F800 series	FR-E800 series	FR-E700 series FR-E7□0-NE
OP0		Operation frequency(RAM)	○	○	○
OP1		Operation frequency (EEPROM)	○	○	○
OP2		Operation mode	○	○	○
OP3		Operating status	○	○	○
OP4*1*2*3	-	Input terminal command	○	○	○
	b0	CMD3: RL terminal			
	b1	CMD4: RM terminal			
	b2	CMD5: RH terminal			
	b3	CMD6: RT terminal			
	b4	CMD7: AU terminal			
	b5	CMD8: JOG terminal			
	b6	CMD9: CS terminal			
	b7	CMD10: MRS terminal			
	b8	CMD11: STOP terminal			
	b9	CMD12: RES terminal			
OP5*2	-	Input terminal command (Extend)	×	○*4	×
	b0	CMD48: NET X1 input			
	b1	CMD49: NET X2 input			
	b2	CMD50: NET X3 input			
	b3	CMD51: NET X4 input			
	b4	CMD52: NET X5 input			

*1 When the GOT is connected to the PU connector and the operation mode is set to the PU operation mode, the device cannot be used.

*2 The monitor data can be changed by the settings of Pr.180 to Pr.189 (input terminal function selection).
For the relationship between the parameters and terminals, refer to the following.
📖Manual of the inverter used

*3 The device is invalid for the initial state of the inverter in which a function that cannot be controlled by the GOT is set or no function is set.
Change the relevant setting in Pr.180 to Pr.189 (input terminal function selection).

*4 Use an inverter having SERIAL (serial No.) "□□211******" or later.
SERIAL (serial No.) is provided on the rating plate of the inverter.

■Current value monitor ([FREQROL 800/E700NE(Batch monitor)])

○: Available

×: Not available

Virtual device name	Name	FR-A800 series	FR-A800 Plus series				FR-F800 series	FR-E800 series		FR-E700 series
			CRN	R2R	AWH	LC		E800	E	FR-E7□0-NE
PV1	Output frequency/speed	×	×	×	○	×	×	×	×	○
	Output frequency	○	○	○	×	○	○	○	○	×
PV2	Output current	○	○	○	○	○	○	○	○	○
PV3	Output voltage	○	○	○	○	○	○	○	○	○
PV5	Frequency setting value/speed setting	×	×	×	○	×	×	×	×	○
	Frequency setting value	○	○	○	×	○	○	○	○	×
PV6	Speed/machine speed	○	○	○	○	×	○	○	○	×
	Operation speed	×	×	×	×	○	×	×	×	×
PV7	Motor torque	○	○	○	○	○	○	○	○	○
PV8	Converter output voltage	○	○	○	○	○	○	○	○	○
PV9	Regenerative brake duty	○	○	○	○	○	×	○	○	○
PV10	Electronic thermal O/L relay load factor	○	○	○	○	○	○	○	○	○
PV11	Output current peak value	○	○	○	○	○	○	○	○	○
PV12	Converter output voltage peak value	○	○	○	○	○	○	○	○	○
PV13	Input power	○	○	○	○	○	○	×	×	×
PV14	Output power	○	○	○	○	○	○	○	○	○
PV17	Load meter	○	○	○	○	○	○	○	○	×
PV18	Motor excitation current	○	○	○	○	○	○	○	○	×
PV19	Position pulse	○	○	×	×	○	×	×	×	×
	Analog output signal for dancer tension control	×	×	○	○	×	×	×	×	×
PV20	Cumulative energization time	○	○	○	○	○	○	○	○	○
PV22	Orientation status	○	○	×	×	○	×	×	×	×
	Winding diameter	×	×	○	○	×	×	×	×	×
PV23	Actual operation time	○	○	○	○	○	○	○	○	○
PV24	Motor load factor	○	○	○	○	○	○	○	○	○
PV25	Cumulative power	○	○	○	○	○	○	○	○	○
PV26	Position command (lower digits)	×	○	×	×	×	×	×	×	×
	Line speed command	×	×	○	○	×	×	×	×	×
PV27	Position command (upper digits)	×	○	×	×	×	×	×	×	×
	Actual line speed	×	×	○	○	×	×	×	×	×
PV28	Current position (lower digits)	×	○	×	×	×	×	×	×	×
	Dancer compensation speed	×	×	○	○	×	×	×	×	×
PV29	Current position (upper digits)	×	○	×	×	×	×	×	×	×
	Winding length (upper + lower)	×	×	○	○	×	×	×	×	×
PV30	Droop pulse (lower digits)	×	○	×	×	×	×	×	×	×
	Analog output signal 2 for dancer tension control	×	×	○	○	×	×	×	×	×
PV31	Droop pulse (upper digits)	×	○	×	×	×	×	×	×	×
	Line speed pulse monitor	×	×	○	○	×	×	×	×	×
PV32	Torque command	○	○	○	○	○	×	○	○	×
PV33	Torque current command	○	○	○	○	○	×	○	○	×
PV34	Motor output	○	○	○	○	○	○	×	×	×
PV35	Feedback pulse	○	○	○	○	○	×	×	×	×

Virtual device name	Name	FR-A800 series	FR-A800 Plus series				FR-F800 series	FR-E800 series		FR-E700 series
			CRN	R2R	AWH	LC		E800	E	FR-E7□0-NE
PV36	Torque (positive polarity for driving torque/negative polarity for regenerative braking torque)	○	○	○	○	○	×	×	×	×
PV38	Trace status	×	○	○	○	×	×	×	×	×
PV39	SSCNET III communication status	○	○	×	×	○	×	×	×	×
PV40	PLC function user monitor 1	○	○	○	○	○	○	○	○	×
PV41	PLC function user monitor 2	○	○	○	○	○	○	○	○	×
PV42	PLC function user monitor 3	○	○	○	○	○	○	○	○	×
PV43	Station number (RS-485 terminals)	×	○	○	○	×	×	×	×	×
PV44	Station number (PU)	×	○	○	○	×	×	×	×	×
PV45	Station number (CC-Link)	×	○	○	○	×	×	×	×	×
PV46	Motor temperature	○	○	○	○	○	×	×	×	×
PV50	Energy saving effect	○	○	○	○	○	○	○	○	×
PV51	Cumulative energy saving	○	○	○	○	○	○	○	○	×
PV52	PID set point	○	○	○	○	○	○	○	○	○
PV53	PID measured value	○	○	○	○	○	○	○	○	○
PV54	PID deviation	○	○	○	○	○	○	○	○	○
PV61	Motor thermal load factor	○	○	○	○	○	○	○	○	○
PV62	Inverter thermal load factor	○	○	○	○	○	○	○	○	○
PV63	Cumulative power 2	×	×	×	×	×	×	×	×	○
	Winding length (upper)	×	×	○	○	×	×	×	×	×
PV64	PTC thermistor resistance	○	○	○	○	○	○	×	×	×
PV67	PID measured value 2	○	○	○	○	○	○	○	○	×
PV68	Emergency drive status	×	×	×	×	×	×	×	×	×
PV69	PID input pressure value	×	×	×	×	×	○	×	×	×
PV71	Cumulative pulse	○	○	○	○	○	×	×	×	×
PV72	Cumulative pulse overflow times	○	○	○	○	○	×	×	×	×
PV73	Cumulative pulse (control terminal option)	○	○	○	○	○	×	×	×	×
PV74	Cumulative pulse overflow times (control terminal option)	○	○	○	○	○	×	×	×	×
PV75	Multi-revolution counter	○	○	×	×	○	×	×	×	×
PV77	32-bit cumulative energy (lower 16 bits)	×	×	×	○	×	×	×	×	×
PV78	32-bit cumulative energy (upper 16 bits)	×	×	×	○	×	×	×	×	×
PV79	32-bit cumulative energy (lower 16 bits)	×	×	×	○	×	×	×	×	×
PV80	32-bit cumulative energy (upper 16 bits)	×	×	×	○	×	×	×	×	×
PV81	BACnet reception status	×	×	×	×	×	○	×	×	×
	Tension command after taper compensation	×	×	○	○	×	×	×	×	×
PV82	BACnet token pass counter	×	×	×	×	×	○	×	×	×
	Winding diameter compensation torque command	×	×	○	○	×	×	×	×	×
PV83	BACnet valid APDU counter	×	×	×	×	×	○	×	×	×
	Inertia compensation	×	×	○	○	×	×	×	×	×
PV84	BACnet communication error counter	×	×	×	×	×	○	×	×	×
	Mechanical loss compensation	×	×	○	○	×	×	×	×	×
PV85	BACnet terminal FM/CA output level	×	×	×	×	×	○	×	×	×
	Terminal 1 input voltage	×	×	○	○	×	×	×	×	×

A

Virtual device name	Name	FR-A800 series	FR-A800 Plus series				FR-F800 series	FR-E800 series		FR-E700 series
			CRN	R2R	AWH	LC		E800	E	FR-E7□0-NE
PV86	BACnet terminal AM output level	×	×	×	×	×	○	×	×	×
	Terminal 1 input after calibration (%)	×	×	○	○	×	×	×	×	×
PV87	Remote output value 1	○	○	○	○	○	○	×	×	×
PV88	Remote output value 2	○	○	○	○	○	○	×	×	×
PV89	Remote output value 3	○	○	○	○	○	○	×	×	×
PV90	Remote output value 4	○	○	○	○	○	○	×	×	×
PV91	PID manipulated variable	○	○	○	○	○	○	○	○	×
PV92	Second PID set point	○	○	×	×	○	○	×	×	×
	PID torque control actual tension	×	×	○	×	×	×	×	×	×
PV93	Second PID measured value	○	○	×	×	○	○	×	×	×
	PID torque control manipulated tension	×	×	○	×	×	×	×	×	×
PV94	Second PID deviation	○	○	×	×	○	○	×	×	×
PV95	Second PID measured value 2	○	○	×	×	○	○	×	×	×
PV96	Second PID manipulated variable	○	○	×	×	○	○	×	×	×
PV97	Dancer main set speed (For FR-E800 and FR-E800-E, dancer main speed setting)	○	○	×	×	○	×	○	○	×
	Winding diameter compensation speed	×	×	○	○	×	×	×	×	×
PV98	Control circuit temperature	○	○	○	○	○	○	×	×	×

[Laser Displacement Sensor MH11]

GT 21

Only available to GT2104-PMBDS2.

Item	Reference
Specifications of bit devices	☞ Page 1745 Monitoring-supported bit devices ([Laser Displacement Sensor MH11])
	☞ Page 1745 Availability of writing/reading data to/from bit devices ([Laser Displacement Sensor MH11])
Specifications of word devices	☞ Page 1745 Monitoring-supported word devices ([Laser Displacement Sensor MH11])
	☞ Page 1746 Availability of writing/reading data to/from word devices ([Laser Displacement Sensor MH11])

Monitoring-supported bit devices ([Laser Displacement Sensor MH11])

The following table shows monitoring-supported bit devices.

To check whether writing/reading data to/from each device is available, refer to the following.

☞ Page 1745 Availability of writing/reading data to/from bit devices ([Laser Displacement Sensor MH11])

○: Available

×: Not available

Device name		Device No. representation	Setting range	Specifications of EG devices*1	
				Assignment to EG devices	Access using a client
R	Internal relay	Decimal + hexadecimal	R(Word address)(Bit address) Notation example: R100F • Word address (DEC): 000 to 999 • Bit address (HEX): 0 to F	○	○

*1 For the devices assigned to EG devices (gateway devices) and the compatible clients, refer to the following.
📖GT Designer3 (GOT2000) Screen Design Manual

Availability of writing/reading data to/from bit devices ([Laser Displacement Sensor MH11])

The following shows whether writing/reading data to/from bit devices is available by device type.

When the device type is other than the bit type, set the device No. in multiples of 16.

R/W: Both read and write

R/-: Read only

-/W: Write only

-/-: No read/write access

Device name	Device type				
	Bit	Byte (8 bits)	Word (16 bits)	Double-word (32 bits)	Quad-word (64 bits)
R	R/W	-/-	-/-	-/-	-/-

Monitoring-supported word devices ([Laser Displacement Sensor MH11])

The following table shows monitoring-supported word devices.

To check whether writing/reading data to/from each device is available, refer to the following.

☞ Page 1746 Availability of writing/reading data to/from word devices ([Laser Displacement Sensor MH11])

○: Available

×: Not available

Device name		Device No. representation	Setting range	Specifications of EG devices*1	
				Assignment to EG devices	Access using a client
DT	Data register	Decimal	0 to 99999	○	○
WR	Internal relay	Decimal	000 to 999	○	○

*1 For the devices assigned to EG devices (gateway devices) and the compatible clients, refer to the following.
📖GT Designer3 (GOT2000) Screen Design Manual

Availability of writing/reading data to/from word devices ([Laser Displacement Sensor MH11])

The following shows the availability of writing/reading data to/from word devices by device type.

R/W: Both read and write

R/-: Read only

-/W: Write only

-/-: No read/write access

Device name	Device type			
	Word (16 bits)	Double-word (32 bits)	Quad-word (64 bits)	Bit of word data
DT	R/W	R/W	-/-	R/W
WR	R/W	R/W	-/-	-/-

MEMO

A

REVISIONS

* The manual number is given on the bottom left of the back cover.

Revision date	* Manual Number	Revision
Sep. 2013	SH(NA)-081197ENG-A	Compatible with GT Works3 Version1.100E
Nov. 2013	SH(NA)-081197ENG-B	Compatible with GT Works3 Version1.104J • Changing the icons of the supported models
Jan. 2014	SH(NA)-081197ENG-C	Compatible with GT Works3 Version1.108N • FX3GE is supported. • FR-A800 series, FR-F800 series, and sensorless servo (FR-E7□0EX) are supported. • MELSERVO-JE is supported.
Apr. 2014	SH(NA)-081197ENG-D	Compatible with GT Works3 Version1.112S • GT25 and GS21 have been added. • Q24DHCCPU-VG is supported. • Expansion of the device definition for inverters and sensorless servos is supported.
Jun. 2014	SH(NA)-081197ENG-E	Compatible with GT Works3 Version1.117X • MELSEC iQ-R Series is supported. • Communication driver (Serial (MELSEC)) is supported.
Jul. 2014	SH(NA)-081197ENG-F	Compatible with GT Works3 Version1.118Y • MELSEC-WS connection of GS21 is supported. • MELSEC-WS (WS0-CPU3) is supported.
Oct. 2014	SH(NA)-081197ENG-G	Compatible with GT Works3 Version1.122C • GT21 is added. • MR-J4-□A-RJ is supported. • IP Filter Setting is supported. • Buffer memory Module No. Indirect specification is supported. Bit specification is supported. • FA TRANSPARENT FUNCTION It corresponds to CC-Link IE Controller Network via. • The name of QnUDVCPU.LCPU Logging Configuration Tool is changed to CPU Module Logging Configuration Tool.
Jan. 2015	SH(NA)-081197ENG-H	Compatible with GT Works3 Version1.126G • C Controller module (MELSEC iQ-R Series) is supported. • MELSEC iQ-F Series is supported. • FA Transparent Function MELSEC iQ-R Series MX Component, MX Sheet are supported. C Controller module (MELSEC iQ-R Series) CW Configurator is supported. NC Configurator2 is supported.
Apr. 2015	SH(NA)-081197ENG-I	Compatible with GT Works3 Version1.130L • Automatic connection with FR-A800 series, FR-A800 Plus series, and FR-F800 series for GT21 is supported. • The cyclic communication with the master station of CC-Link connection (Intelligent Device station) is supported. • GT27 is added (GT2705-VTBD). • GT21 is added (GT2104-RTBD, GT2103-PMBDS2, GT2103-PMBLS).
May 2015	SH(NA)-081197ENG-J	Compatible with GT Works3 Version1.131M • Some corrections
Jun. 2015	SH(NA)-081197ENG-K	Compatible with GT Works3 Version1.134Q • GT21 Robot controller connection is supported.
Jul. 2015	SH(NA)-081197ENG-L	Compatible with GT Works3 Version1.136S • MELSEC iQ-R Series RnENCPU connection is supported. • MELSEC iQ-R Series Device range extention (extended SRAM cassette is supported).
Oct. 2015	SH(NA)-081197ENG-M	Compatible with GT Works3 Version1.144A • MELSEC iQ-R Series RnSFCPU connection is supported. • MELSEC iQ-R Series R64MTCPU connection is supported. • PLC CPU Device range extention (servo amplifier Device is supported). • GT21 is added (GT2104-PMBD, GT2104-PMBDS). • FA Transparent Function GX Developer is supported.

Revision date	* Manual Number	Revision
Dec. 2015	SH(NA)-081197ENG-N	Compatible with GT Works3 Version1.150G • Q26DHCCPU-LS is supported. • Station blocking function compatible Ethernet connection • Station monitoring function of the following connection CC-Link IE controller network connection CC-Link IE field network connection • MELSEC iQ-R Series Device placement method of RnMTCPU R standard placement method is supported. • FA Transparent Function MX Component Ver 4.11M is supported.
May 2016	SH(NA)-081197ENG-O	Compatible with GT Works3 Version1.155M • FR-A800 series (FR-A8□0-E, FR-A8□2-E, and FR-A8□6-E) is supported. • CNC C80(R16NCCPU-S1) is supported. • Other station of the buffer memory is supported. • FA Transparent Function It supports via CC-Link IE controller network of GX Works3. It supports via CC-Link IE field network of GX Works2. • GT21 is added (GT2105-QTBDS, GT2105-QMBDS, GT2104-PMBDS2, GT2104-PMBLS).
Aug. 2016	SH(NA)-081197ENG-P	Compatible with GT Works3 Version1.160S • MELSEC iQ-R Series Redundant Setting is supported. • MELSEC iQ-R Series CC-Link IE Field Network head module is supported. • MELSEC iQ-R Series compatible device is added. Refresh register, Link direct device, CPU buffer memory access device • Mitsubishi PLC (Ethernet connection) TCP/IP protocol is supported. • Inverter connection is added. FR-A800 Plus series, FR-B/B3 series • GOT2000 series Ethernet communication unit is supported.
Oct. 2016	SH(NA)-081197ENG-Q	Compatible with GT Works3 Version1.165X • Laser Displacement Sensor MH11 connection is supported. (GT21 only) • FR-F800 series (FR-F8□0-E and FR-F8□2-E) is supported. • FA Transparent Function It supports via CC-Link IE field network of GX Works3. RCPU Redundant Setting is supported. • Servo axis No. switching is supported.
Jan. 2017	SH(NA)-081197ENG-R	Compatible with GT Works3 Version1.170C • GT2107-W is added (GT2107-WTBD, GT2107-WTSD). • MR-J4-GF(-RJ) is supported.
Apr. 2017	SH(NA)-081197ENG-S	Compatible with GT Works3 Version1.175H • GT25 is added (GT25-W) • MELSERVO JE-BF is supported
Jun. 2017	SH(NA)-081197ENG-T	Compatible with GT Works3 Version1.180N • GT25 is added (GT2505-V) • CR800-R(R16RTCPU), CR800-D is supported. • Name of the communication driver, [Ethernet(Mitsubishi Electric), Gateway] is changed. • For Ethernet connection, the default value of the GOT station No. is changed to [18].
Oct. 2017	SH(NA)-081197ENG-U	Compatible with GT Works3 Version1.185T • CNC M800/M80 is supported. • MR-JE-C is supported. • The use of the virtual device for manufacturer setting for MELSERVO-J4-A(-RJ), MELSERVO-JE-A by some users is supported. • FA Transparent Function Correspondence of the following communication path for GX Works3, MT Works2, MX Component(MX Sheet) Between personal computer and GOT: Ethernet, between GOT and PLC: Ethernet Correspondence of the following communication path for GX Works2 in FXCPU Between personal computer and GOT: Ethernet, between GOT and PLC: Ethernet
Dec. 2017	SH(NA)-081197ENG-V	Compatible with GT Works3 Version 1.190Y • Compatible with R00CPU, R01CPU, R02CPU • Compatible with avoiding overlapping of [GOT Port No. (Communication)]
Apr. 2018	SH(NA)-081197ENG-W	Compatible with GT Works3 Version 1.195D • FR-A800 series (FR-A8□0-GF and FR-A8□2-GF) is supported. • MELIPC connection is supported. • FA Transparent Function Correspondence of the following communication path for GX Works3, MELSEC iQ-F Series Between personal computer and GOT: Ethernet, between GOT and PLC: Ethernet • MI Configurator is supported.

Revision date	* Manual Number	Revision
Jul. 2018	SH(NA)-081197ENG-X	Compatible with GT Works3 Version1.200J • R08PSFCPU, R16PSFCPU, R32PSFCPU, and R120PSFCPU are supported. • FR-E700 series (FR-E7□0-NE) is supported. • FA transparent function Between the personal computer and the GOT: USB, between the GOT and the PLC: Ethernet FR Configurator2 is supported.
Oct. 2018	SH(NA)-081197ENG-Y	Compatible with GT Works3 Version1.205P • CR800-Q (Q172DSRCPU) is supported. • Serial connection to FR-A800 series (FR-A8□0-GF and FR-A8□2-GF) is supported. • FA transparent function For R08PSFCPU, R16PSFCPU, R32PSFCPU, R120PSFCPU, GX Works3 supports the following communication path. Between personal computer and GOT: USB, between GOT and PLC: EthernetBetween personal computer and GOT: USB, between GOT and PLC: CC-Link IE Controller Network Between personal computer and GOT: USB, between GOT and PLC: CC-Link IE Field Network Between personal computer and GOT: Ethernet, between GOT and PLC: Ethernet Between personal computer and GOT: Ethernet, between GOT and PLC: CC-Link IE Controller Network Between personal computer and GOT: Ethernet, between GOT and PLC: CC-Link IE Field Network For CR800-Q (Q172DSRCPU), RT ToolBox3 supports the following communication path. Between personal computer and GOT: USB, between GOT and PLC: Bus Between personal computer and GOT: USB, between GOT and PLC: Direct CPU Between personal computer and GOT: USB, between GOT and PLC: Ethernet For FR-A800 series and FR-F800 series, FR Configurator2 supports the following communication paths. Between personal computer and GOT: Ethernet, between GOT and PLC: Ethernet
Jan. 2019	SH(NA)-081197ENG-Z	Compatible with GT Works3 Version1.210U • Some corrections
Apr. 2019	SH(NA)-081197ENG-AA	Compatible with GT Works3 Version1.215Z • Specifying CPU numbers with devices is supported. • Specifying module numbers with devices is supported.
Jul. 2019	SH(NA)-081197ENG-AB	Compatible with GT Works3 Version1.220E • CC-Link IE TSN connection is supported. • RCPU system monitoring via a QCPU is supported. • Connection with CC-Link IE TSN master/local module (RJ71GN11-T2) by the Ethernet connection is supported. • FR-A800 Plus series (FR-A8□0-E-CRN, FR-A8□2-E-CRN, FR-A8□0-E-R2R, and FR-A8□2-E-R2R) is supported.
Oct. 2019	SH(NA)-081197ENG-AC	Compatible with GT Works3 Version1.225K • FX5UJ is supported. • Monitoring other networks using the CC-Link IE TSN connection is supported. • Specifying CPU numbers and module numbers with devices is supported by GT21 and GS21.
Jan. 2020	SH(NA)-081197ENG-AD	Compatible with GT Works3 Version1.230Q • FR-A800 series (FR-A8□0-GN and FR-A8□2-GN) is supported. • FR-E800 series is supported. • Connection to FR-A800, FR-F800, or FR-E800 series using the CC-Link IE TSN connection is supported. • Connection to an inverter through a PLC using the CC-Link IE TSN connection is supported. • FA transparent function FR-E800 series is supported.
Apr. 2020	SH(NA)-081197ENG-AE	Compatible with GT Works3 Version1.235V • Motion module is supported. • Reading/writing data from/to 8-bit and 64-bit devices are supported.
Jun. 2020	SH(NA)-081197ENG-AF	Compatible with GT Works3 Version1.240A • The company name of TOSHIBA MACHINE CO., LTD. has been changed to SHIBAURA MACHINE CO., LTD. • Motion module (RD78GHV, RD78GHW) is supported. • FR-A800 Plus series (FR-A8□0-AWH, FR-A8□0-E-AWH, FR-A8□0-LC, FR-A8□0-E-LC) is supported. • MR-J5 series (MR-J5-□G, MR-J5-□G-RJ, MR-J5W2-□G, and MR-J5W3-□G) is supported.
Oct. 2020	SH(NA)-081197ENG-AG	Compatible with GT Works3 Version1.245F • Ring connection with the MELSEC iQ-R series using the CC-Link IE TSN connection is supported. • Connection with R08SFCPU, R16SFCPU, R32SFCPU, or R120SFCPU using the CC-Link IE TSN connection is supported. • Connection with FX5U or FX5UC using the CC-Link IE TSN connection is supported. • Connection with the CC-Link IE TSN master/local module (FX5-CCLGN-MS) using the Ethernet connection is supported. • The MR-JET series (MR-JET-□G) is supported.
Jan. 2021	SH(NA)-081197ENG-AH	Compatible with GT Works3 Version1.250L • GT25 is added (GT2512-WXTBD, GT2512-WXTSD). • GS21 is added (GS2110-WTBD-N, GS2107-WTBD-N).

Revision date	* Manual Number	Revision
Apr. 2021	SH(NA)-081197ENG-AI	Compatible with GT Works3 Version1.255R • Connection with MELSEC iQ-R Series extension base unit for the redundant system is supported. • Connection with MELSEC iQ-F Ethernet module (FX5-ENET, FX5-ENET/IP) is supported.
Jul. 2021	SH(NA)-081197ENG-AJ	Compatible with GT Works3 Version1.260W • Connection with the C Controller module (MELSEC iQ-R series) using the CC-Link IE TSN connection is supported. • Connection with the MR-J5 series or MR-JET series using the Ethernet connection is supported. • The range of virtual inverter devices has been extended. • Direct CPU connection has been renamed to the direct CPU connection (serial).
Oct. 2021	SH(NA)-081197ENG-AK	Compatible with GT Works3 Version1.265B • MELSEC iQ-F series Motion module (FX5-40SSC-G, FX5-80SSC-G) is supported. • FA transparent function Connection with GX Works3 using the CC-Link IE TSN connection is supported.
Jan. 2022	SH(NA)-081197ENG-AL	Compatible with GT Works3 Version1.270G • FX3U-ENET is supported. • MELSEC iQ-R series MELSECWinCPU module is supported. • MR-J5(W)-□B(-RJ) and MR-J5D-□G4 are supported. • FA transparent function Connection with CW Configurator using the serial communication, CC-Link IE Controller Network, or CC-Link IE Field Network is supported. FX Configurator-EN is supported.
Apr. 2022	SH(NA)-081197ENG-AM	Compatible with GT Works3 Version1.275M • Connection with controllers compatible with CC-Link IE TSN protocol version 2.0 using the CC-Link IE TSN connection is supported. • Connection with a PLC or MELIPC through a servo amplifier using Ethernet connection is supported. • Connection with a servo amplifier (MR-J5-□G(-RJ), MR-J5W2-□G, MR-J5W3-□G, or MR-JET-G) through a CC-Link IE TSN master/local module (RJ71GN11-T2) is supported. • FX5S is supported.
Jul. 2022	SH(NA)-081197ENG-AN	Compatible with GT Works3 Version1.280S • Connection with the CC-Link IE TSN Plus master/local module (RJ71GN11-EIP) via Ethernet or CC-Link IE TSN connection is supported. • Connection with the Motion module (RD78G, RD78GH) operating as a master station via CC-Link IE TSN connection is supported.
Oct. 2022	SH(NA)-081197ENG-AP	Compatible with GT Works3 Version1.285X • Connection with a servo amplifier (MR-J5-□B(-RJ), MR-J5W2-□B, or MR-J5W3-□B) through a Motion controller (R16MTCPU, R32MTCPU, or R64MTCPU) or Simple Motion module (RD77MS2, RD77MS4, RD77MS8, or RD77MS16) is supported.
Jan. 2023	SH(NA)-081197ENG-AQ	Compatible with GT Works3 Version1.290C • The name of the communication driver for Ethernet connection to ALLEN-BRADLEY PLC has been changed.

Revision date	* Manual Number	Revision
Apr. 2023	SH(NA)-081197ENG-AR	Compatible with GT Works3 Version1.295H • Connection with an inverter (FR-A8□0, FR-A8□2, FR-A8□6, FR-A8□0-GN, FR-A8□2-GN, FR-F8□0, FR-F8□2, FR-F8□6, or FR-E8□0-E) through a CC-Link IE TSN Plus master/local module (RJ71GN11-EIP) is supported. • Connection with an inverter (FR-A8□0, FR-A8□2, FR-A8□6, FR-A8□0-GN, FR-A8□2-GN, FR-F8□0, FR-F8□2, FR-F8□6, or FR-E8□0-E) through a MELSEC iQ-R series Motion module (RD78G or RD78GH) is supported. • Connection with a servo amplifier (MR-J5-□G(-RJ), MR-J5W2-□G, MR-J5W3-□G, MR-J5D2-□G4, MR-J5D3-□G4, or MR-JET-□G) through a CC-Link IE TSN Plus master/local module (RJ71GN11-EIP) is supported. • FA transparent function For the RCPU, CPU Module Logging Configuration Tool supports the following communication paths. Between a personal computer and the GOT: USB, between the GOT and PLC: Serial communication Between a personal computer and the GOT: USB, between the GOT and PLC: Ethernet Between a personal computer and the GOT: USB, between the GOT and PLC: CC-Link IE Controller Network Between a personal computer and the GOT: USB, between the GOT and PLC: CC-Link IE Field Network Between a personal computer and the GOT: USB, between the GOT and PLC: CC-Link IE TSN Between a personal computer and the GOT: Ethernet, between the GOT and PLC: Serial communication Between a personal computer and the GOT: Ethernet, between the GOT and PLC: Ethernet Between a personal computer and the GOT: Ethernet, between the GOT and PLC: CC-Link IE Controller Network Between a personal computer and the GOT: Ethernet, between the GOT and PLC: CC-Link IE Field Network Between a personal computer and the GOT: Ethernet, between the GOT and PLC: CC-Link IE TSN For FR-A800 series, FR-F800 series, and FR-E800, FR Configurator2 supports the following communication paths. Between a personal computer and GOT: Ethernet, between the GOT and PLC: CPU direct communication (serial) • GS25 model (GS2512-WXTBD) has been added.
Jul. 2023	SH(NA)-081197ENG-AS	Compatible with GT Works3 Version1.300N • Ethernet connection with FX5UJ via the CC-Link IE TSN master/local module (FX5-CCLGN-MS) is supported. • Connection with FX5UJ using the CC-Link IE TSN connection is supported.
Oct. 2023	SH(NA)-081197ENG-AT	Compatible with GT Works3 Version1.305T • Some corrections
Jan. 2024	SH(NA)-081197ENG-AU	Compatible with GT Works3 Version1.310Y • Connection with a servo amplifier (MR-J5-□B(-RJ), MR-J5W2-□B, or MR-J5W3-□B) through a Motion controller (Q170MSCPU) is supported.

This manual confers no industrial property rights or any rights of any other kind, nor does it confer any patent licenses.
Mitsubishi Electric Corporation cannot be held responsible for any problems involving industrial property rights which may occur as a result of using the contents noted in this manual.

©2013 MITSUBISHI ELECTRIC CORPORATION

WARRANTY

Please check the following product warranty details before using this product.

■1. Gratis Warranty Term and Gratis Warranty Range

If any faults or defects (hereinafter "Failure") found to be the responsibility of Mitsubishi occurs during use of the product within the gratis warranty term, the product shall be repaired at no cost via the sales representative or Mitsubishi Service Company.
However, if repairs are required onsite at domestic or overseas location, expenses to send an engineer will be solely at the customer's discretion.
Mitsubishi shall not be held responsible for any re-commissioning, maintenance, or testing on-site that involves replacement of the failed module.

(1) Gratis Warranty Term

The gratis warranty term of the product shall be for thirty-six (36) months after the date of purchase or delivery to a designated place.
Note that after manufacture and shipment from Mitsubishi, the maximum distribution period shall be six (6) months, and the longest gratis warranty term after manufacturing shall be forty-two (42) months.
The gratis warranty term of repair parts shall not exceed the gratis warranty term before repairs.

(2) Gratis Warranty Range

(a) The customer shall be responsible for the primary failure diagnosis unless otherwise specified.
If requested by the customer, Mitsubishi Electric Corporation or its representative firm may carry out the primary failure diagnosis at the customer’s expense.
The primary failure diagnosis will, however, be free of charge should the cause of failure be attributable to Mitsubishi Electric Corporation.

(b) The range shall be limited to normal use within the usage state, usage methods, and usage environment, etc., which follow the conditions and precautions, etc., given in the instruction manual, user's manual and caution labels on the product.

(c) Even within the gratis warranty term, repairs shall be charged in the following cases.
- Failure occurring from inappropriate storage or handling, carelessness or negligence by the user. Failure caused by the user's hardware or software design.
- Failure caused by unapproved modifications, etc., to the product by the user.
- When the Mitsubishi product is assembled into a user's device, Failure that could have been avoided if functions or structures, judged as necessary in the legal safety measures the user's device is subject to or as necessary by industry standards, had been provided.
- Failure that could have been avoided if consumable parts designated in the instruction manual had been correctly serviced or replaced.
- Replacing consumable parts such as a battery, backlight, and fuse.
- Failure caused by external irresistible forces such as fires or abnormal voltages, and Failure caused by force majeure such as earthquakes, lightning, wind and water damage.
- Failure caused by reasons that could not be predicted by scientific technology standards at the time of shipment from Mitsubishi.
- Any other failure found not to be the responsibility of Mitsubishi or that admitted not to be so by the user.

■2. Onerous repair term after discontinuation of production

(1) Mitsubishi shall accept onerous product repairs for seven (7) years after production of the product is discontinued.
Discontinuation of production shall be notified with Mitsubishi Technical Bulletins, etc.

(2) Mitsubishi shall not accept a request for product supply (including spare parts) after production is discontinued.

■3. Overseas service

Overseas, repairs shall be accepted by Mitsubishi's local overseas FA Center.
Note that the repair conditions at each FA Center may differ.

■4. Exclusion of loss in opportunity and secondary loss from warranty liability

Regardless of the gratis warranty term, Mitsubishi shall not be liable for compensation to:

(1) Damages caused by any cause found not to be the responsibility of Mitsubishi.

(2) Loss in opportunity, lost profits incurred to the user by Failures of Mitsubishi products.

(3) Special damages and secondary damages whether foreseeable or not, compensation for accidents, and compensation for damages to products other than Mitsubishi products.

(4) Replacement by the user, maintenance of on-site equipment, start-up test run and other tasks.

■5. Changes in product specifications

The specifications given in the catalogs, manuals, or technical documents are subject to change without prior notice.

■6. Product application

(1) In using the Mitsubishi graphic operation terminal, the usage conditions shall be that the application will not lead to a major accident even if any problem or fault should occur in the graphic operation terminal device, and that backup and fail-safe functions are systematically provided outside of the device for any problem or fault.

(2) The Mitsubishi graphic operation terminal has been designed and manufactured for applications in general industries, etc.
Thus, applications in which the public could be affected such as in nuclear power plants and other power plants operated by respective power companies, and applications in which a special quality assurance system is required, such as for Railway companies or Public service shall be excluded from the graphic operation terminal applications.
In addition, applications in which human life or property could be greatly affected, such as in aircraft, medical, railway applications, incineration and fuel devices, manned transportation equipment, recreation and amusement devices, safety devices, shall also be excluded from the graphic operation terminal.
Even for the above applications, however, Mitsubishi Electric Corporation may consider the possibility of an application, provided that the customer notifies Mitsubishi Electric Corporation of the intention, the application is clearly defined and any special quality is not required, after the user consults the local Mitsubishi representative.

Intellectual Property Rights

■Trademarks

MELDAS, MELSEC, iQ Platform, MELSOFT, GOT, CC-Link, CC-Link/LT, and CC-Link IE are trademarks or registered trademarks of Mitsubishi Electric Corporation in Japan and other countries.

Microsoft, Microsoft Access, Excel, SQL Server, Visual Basic, Visual C++, Visual C#, Windows, Windows NT, Windows Server, and Windows Vista are trademarks of the Microsoft group of companies.

MODBUS is a trademark of Schneider Electric SA.

DeviceNet is a trademark of ODVA (Open DeviceNet Vendor Association, Inc.).

VNC is a registered trademark of RealVNC Ltd. in the United States and other countries.

Unicode is a trademark or registered trademark of Unicode, Inc. in the United States and other countries.

PictBridge is a registered trademark of Canon Inc.

Adobe and Adobe Reader are registered trademarks of Adobe Systems Incorporated.

Oracle and JavaScript are registered trademarks of Oracle Corporation and/or its affiliates in the United States and other countries.

QR Code is a trademark or registered trademark of DENSO WAVE INCORPORATED in Japan, the United States, and/or other countries.

Anybus is a registered trademark of HMS Industrial Networks AB.

Android and Google Chrome are trademarks or registered trademarks of Google Inc.

IOS is a trademark or registered trademark of Cisco in the U.S. and other countries and is used under license.

Safari and iPhone are trademarks of Apple Inc. registered in the United States and other countries. The iPhone trademark is used under license from AIPHONE CO., LTD.

Intel and Intel Core are trademarks or registered trademarks of Intel Corporation in the United States and other countries.

Other company and product names herein are trademarks or registered trademarks of their respective owners.

■Copyrights

The screens (screenshots) are used in accordance with the Microsoft Corporation guideline.

SH(NA)-081197ENG-AU(2401)MEE
MODEL: GOT2000-CON1-SW1-E
MODEL CODE: 1D7MJ8

MITSUBISHI ELECTRIC CORPORATION

HEAD OFFICE: TOKYO BLDG., 2-7-3, MARUNOUCHI, CHIYODA-KU, TOKYO 100-8310, JAPAN
NAGOYA WORKS: 1-14, YADA-MINAMI 5-CHOME, HIGASHI-KU, NAGOYA 461-8670, JAPAN

When exported from Japan, this manual does not require application to the Ministry of Economy, Trade and Industry for service transaction permission.

Specifications subject to change without notice.